Parts Catalogue

DYNAPAC
FAYAT GROUP

V2400TVE

Screed

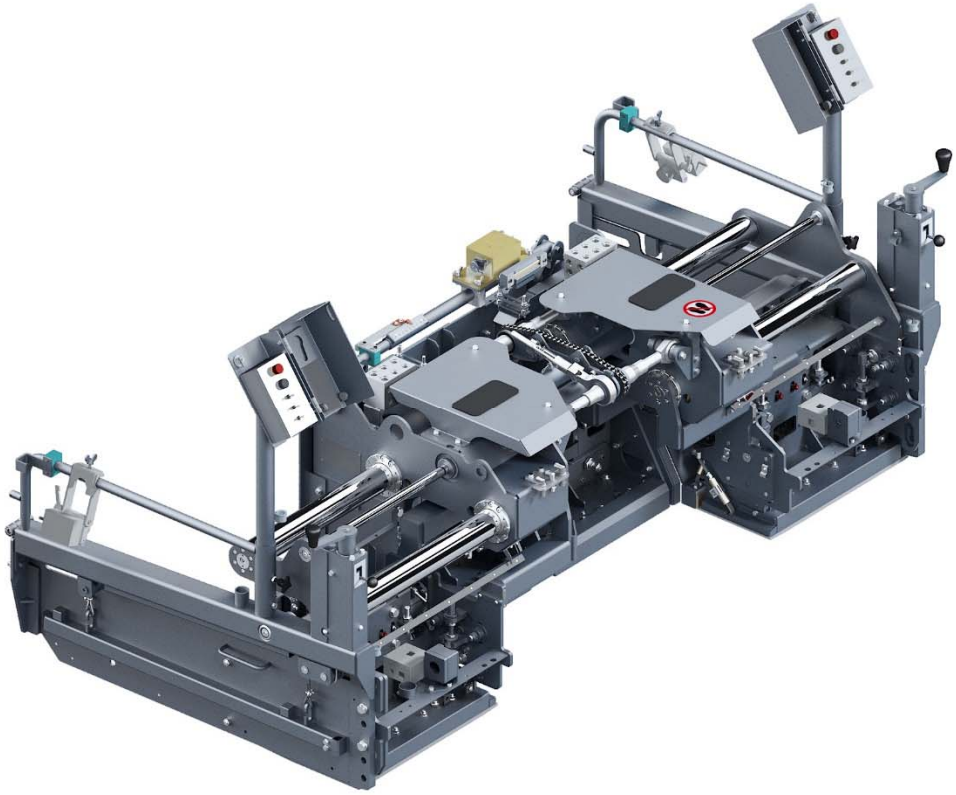

© 2023 Dynapac GmbH | No. 470S777... | 2023-01-04

Your Partner on the Road Ahead

dynapac.com

General information

Use only authorized parts. Any damage or malfunction caused by the use of unauthorized parts is not covered by Warranty or Product Liability.
Any unauthorized use or copying of the contents or any part thereof is prohibited. This applies in particular to trademarks, model denominations, part numbers, and drawings.

Instructions for use
This spare parts list contains no safety regulations and is merely intended to assist in the ordering of spare parts.
For information about operating, servicing, or repairing, the relevant Safety and operating instructions must be consulted at all costs.
Please observe the safety instructions listed in the relevant Safety and operating instructions!

Service, repair and wear part kits, TV

Wear part and Inspection kits . . . 1

Bearing KITS

4812074166 Bearing kit tamper wing, center . . . 2
4812074206 Bearing kit tamper drive, center . . . 3
4812074168 Bearing kit tamper wing, extension . . . 5
4812074169 Bearing kit tamper drive, extension . . . 6

Guide plate KITS

4812061266 Kit, tamper guide . . . 7

Plate / bars KITS

4812062002 Screed plate, gas, H500 . . . 8
4812074167 Wear part kit tamper bar . . . 9
4812075322 Wear part kit screed plates, tamper bar . . . 10

Gas hose KITS

4812075126 Kit, gas hose set . . . 11

Service, repair and wear part kits, TV E

Wear part and Inspection kits . . . 13

Bearing KITS

4812074166 Bearing kit tamper wing, center . . . See page 2
4812074206 Bearing kit tamper drive, center . . . See page 3
4812074168 Bearing kit tamper wing, extension . . . See page 5
4812074169 Bearing kit tamper drive, extension . . . See page 6

Guide plate KITS

4812061266 Kit, tamper guide . . . See page 7

Plate / bars KITS

4812071249 Screed plate, electric, H500 . . . 16
4812074167 Wear part kit tamper bar . . . See page 9
4812074170 Wear part kit screed plates, tamper bar . . . 17

Heating Element KITS

4812074165 Set of heating elements . . . 19

Mechanical, TV

Basic screed

4812061076A Basic screed . . . 20

Extension unit, l.h.

4812061128 Extension unit, l.h. . . . 26

Extension unit, r.h.

4812061177 Extension unit, r.h. . . . 27

Hose guide

4812024535 Hose guide . . . 28

Scale holder, l.h.

4812061133 Scale holder, l.h. . . . 29

Scale holder, r.h.

4812061145 Scale holder, r.h. . . . 30

Gas heating, cpl.

4812072940 Gas heating, cpl. . . . 31

Gas heating
4812072595 Gas heating 35

Profile adjustment
4812060915 Profile adjustment 38

Top con rod, rear.
4812060916 Top con rod, rear. 39

Top con rod, rear.
4812216810 Top con rod, rear. 40

Track adjuster
4812060918 Track adjuster 41

Top con rod, front.
4812060917 Top con rod, front. 42

Top con rod, front.
4812216804 Top con rod, front. 43

Track adjuster
4812060920 Track adjuster 44

Protection and trim plates
4812061255 Protection and trim plates 45

Kit, tamper guide
4812061266 Kit, tamper guide . . . . . See page 7

Hood, l.h.
4812061280 Hood, l.h. 48

Hood, r.h.
4812061283 Hood, r.h. 49

Operation width, TV

Available operation width

Operation width, 3.00m
4812061878 Operation width, 3.00m 50

Extension mount, AT300 l.h.
4812061879 Extension mount, AT300 l.h. 51

Gas heating, AT300 l.h.
4812237476 Gas heating, AT300 l.h. 53

Gas feeder arr. AT300.
4812072600 Gas feeder arr. AT300. 55

Tamper drive, l.h.
4812239660 Tamper drive, l.h. 56

Tamper, l.h.
4812239662 Tamper, l.h. 58

Extension mount, AT300 r.h.
4812061880 Extension mount, AT300 r.h. 60

Gas heating, AT300 r.h.
4812237589 Gas heating, AT300 r.h. 62

Gas feeder arr. AT300.
4812072600 Gas feeder arr. AT300. . . . . See page 55

Tamper drive, r.h.
4812239661 Tamper drive, r.h. 65

Tamper, r.h.
4812239663 Tamper, r.h. 67

Operation width, 3.50m
4812061874 Operation width, 3.50m 69

Extension mount, AT550 l.h.
4812061875 Extension mount, AT550 l.h. 70

Gas heating, AT550 l.h.
4812236583 Gas heating, AT550 l.h. 72

Gas feeder arr. AT550.
4812072984 Gas feeder arr. AT550. 74

Tamper drive, l.h.
4812071771 Tamper drive, l.h. 75

Tamper, l.h.
4812071772 Tamper, l.h. 76

Extension mount, AT550 r.h.
4812061876 Extension mount, AT550 r.h. 78

Gas heating, AT550 r.h.
4812236746 Gas heating, AT550 r.h. 80

Gas feeder arr. AT550.
4812072984 Gas feeder arr. AT550. . . . . See page 74

Tamper drive, l.h.
4812071771 Tamper drive, l.h. . . . . See page 75

Tamper, l.h.
4812071772 Tamper, l.h. . . . . See page 76

Mechanical, TV E

Basic screed
4812061076A Basic screed . . . . . See page 20

Extension unit, l.h.
4812061128 Extension unit, l.h. . . . . See page 26

Extension unit, r.h.
4812061177 Extension unit, r.h. . . . . See page 27

Hose guide
4812024535 Hose guide . . . . . See page 28

Scale holder, l.h.
4812061133 Scale holder, l.h. . . . . See page 29

Scale holder, r.h.
4812061145 Scale holder, r.h. . . . . See page 30

Electric heating - TVE

4812216918 Electric heating 89

Profile adjustment
4812060915 Profile adjustment . . . . . See page 38

Top con rod, rear.
4812060916 Top con rod, rear. . . . . See page 39

Top con rod, rear.
4812216810 Top con rod, rear. . . . . See page 40

Track adjuster
4812060918 Track adjuster . . . . . See page 41

Top con rod, front.
4812060917 Top con rod, front. . . . . See page 42

Top con rod, front.
4812216804 Top con rod, front. . . . . See page 43

Track adjuster
4812060920 Track adjuster . . . . . See page 44

Protection and trim plates
4812061255 Protection and trim plates . . . . . See page 45

Kit, tamper guide
4812061266 Kit, tamper guide . . . . . See page 7

Hood, l.h.
4812061280 Hood, l.h. . . . . See page 48

Hood, r.h.
4812061283 Hood, r.h. . . . . See page 49

Operation width, TVE

Available operation width

Operation width, 3.00m
4812072159 Operation width, 3.00m 100

Extension mount, l.h.
4812072160 Extension mount, l.h. 101

Electric heating
4812061736 Electric heating 103

Tamper drive, l.h.
4812239660 Tamper drive, l.h. . . . . See page 56

Tamper, l.h.
4812239662 Tamper, l.h. . . . . See page 58

Electric
4812018013 Electric 106

Housing ATL
4812017963 Housing ATL 107

Harness W6
4812012881 Harness W6 108

Extension mount, r.h.

4812072161 Extension mount, r.h. 109

Electric heating
4812061736 Electric heating . . . . . See page 103

Tamper drive, r.h.
4812239661 Tamper drive, r.h. . . . . See page 65

Tamper, r.h.
4812239663 Tamper, r.h. . . . . See page 67

Electric
4812018026 Electric 113

Housing ATR
4812017964 Housing ATR 114

Harness W7
4812012882 Harness W7 115

Operation width, 3.50m
4812071766 Operation width, 3.50m 116

Extension mount, l.h.
4812071767 Extension mount, l.h. 117

Electric heating, l.h.
4812071769 Electric heating, l.h. 119

Tamper drive, l.h.
4812071771 Tamper drive, l.h. . . . . See page 75

Tamper, l.h.
4812071772 Tamper, l.h. . . . . See page 76

Electric housing ATL
4812012885 Electric housing ATL 122

Electric housing ATL
4812013261 Electric housing ATL 123

Harness
4812013262 Harness W9 124

Extension mount, r.h.
4812071768 Extension mount, r.h. 125

Electric heating, r.h.
4812071770 Electric heating, r.h. 127

Tamper drive, r.h.
4812071774 Tamper drive, r.h. 129

Tamper, r.h.
4812071775 Tamper, r.h. 130

Electric housing ATR
4812012886 Electric housing ATR 132

Electric housing ATR
4812013263 Electric housing ATR 133

Harness
4812018961 Harness W10 134

Tamper

Tamper drive
4812073587 Tamper drive . . . 135

Kit, tamper subassembly
4812073586 Kit, tamper subassembly . . . 136

Tamper drive, centr. l.h.
4812073585 Tamper drive, centr. l.h. . . . 137

Tamper drive, centr. r.h.
4812073584 Tamper drive, centr. r.h. . . . 139

Tamper drive, ext. l.h.
4812073583 Tamper drive, ext. l.h. . . . 141

Tamper drive, ext. r.h.
4812073576 Tamper drive, ext. r.h. . . . 143

Tamper drive centr. part, l.h.
4812071387 Tamper drive centr. part, l.h. . . . 145

Tamper drive centr. part, r.h.
4812071388 Tamper drive centr. part, r.h. . . . 146

Tamper drive ext. part, l.h.
4812071389 Tamper drive ext. part, l.h. . . . 147

Tamper drive ext. part, r.h.
4812071390 Tamper drive ext. part, r.h. . . . 149

Vibration

Vibration
4812215926 Vibration . . . 151

Vibration unit
4812215824 Vibration unit . . . 152

Hydraulic system

Hydraulic
4812201754A Hydrl. complete screed . . . 154

Hydrl. tamper
4812201758 Hydrl. tamper . . . 155

Hydrl. vibration
4812073214 Hydrl. vibration . . . 158

Cylinder - screed
4812201753 Cylinder - screed . . . 160

Electric system, TV

Electric
4812074001 Electric . . . 161

Control panel
4812073499 Electric Control panel . . . 162

Control panel

4812215580 Control panel . . . 163

Harness W11
4812215555 Harness W11 . . . 164

Resistance thermometer cpl.
4812042276 Resistance thermometer cpl. . . . 165

Wiring
4812073491 Wiring . . . 166

Harness
4812073493 Harness W1 . . . 167
4812018913 Harness W4 . . . 171
4812018962 Harness W5 . . . 172
4812215555 Harness W11 . . . See page 164
4812019037 Ignition cable, W20 . . . 173
4812078606 Harness W20 . . . 174
4812018963 Ignition cable, W21 . . . 175
4812078607 Harness W21 . . . 176
4812017501 Ignition cable, W22 . . . 177
4812078608 Harness W22 . . . 178
4812018852 Ignition cable, W23 . . . 179
4812078640 Harness W23 . . . 180

Remote control
4812016618 Remote control . . . 182

Remote control, l.h.
4812016658 Remote control, l.h. . . . 183

Harness W4
4812018913 Harness W4 . . . See page 171

Remote control, r.h.
4812016659 Remote control, r.h. . . . 185

Harness W5
4812018962 Harness W5 . . . See page 172

Mounting parts
4812016173 Mounting parts . . . 187

Extension cable W1, con.
4812018970 Extension cable W1, con. . . . 188

Electric system, TV E

Electric
4812074002 Electric . . . 189

Control panel
4812016264 Electric . . . 190

Junction box
4812202643 Junction box . . . 191

Harness
4812216556 Harness W3 . . . 196
4812071058 Harness W11 . . . 197

Electric, heating
4812072301 Electric, heating . . . 198

Housing
4812216626 Housing, MT l.h. 199
4812216630 Housing, MT r.h. 200
4812216641 Housing, VT r.h. 201
4812216643 Housing, VT l.h. 202

Control panel
4812202653 Control panel 203
4812202602 Harness W2 204

Electric, tamper
4812018114 Electric, tamper 205

Wiring
4812073498 Wiring 206

Harness
4812073494 Harness W1 207
4812202602 Harness W2 . . . . . See page 204
4812216556 Harness W3 . . . . . See page 196
4812018913 Harness W4 . . . . . See page 171
4812018962 Harness W5 . . . . . See page 172
4812012881 Harness W6 . . . . . See page 108
4812012882 Harness W7 . . . . . See page 115
4812202646 Harness W8 210
4812013262 Harness W9 . . . . . See page 124
4812018961 Harness W10 . . . . . See page 134
4812071058 Harness W11 . . . . . See page 197

Remote control
4812016618 Remote control . . . . . See page 182

Remote control, l.h.
4812016658 Remote control, l.h. . . . . See page 183

Harness W4
4812018913 Harness W4 . . . . . See page 171

Remote control, r.h.
4812016659 Remote control, r.h. . . . . See page 185

Harness W4
4812018962 Harness W5 . . . . . See page 172

Extension cable W1, con.
4812018970 Extension cable W1, con. . . . . See page 188

Options

Available options

4812062325 Cut off shoe, cpl.
4812062325 Cut off shoe, cpl. 216

Cut off shoe, l.h.
4812062323 Cut off shoe, l.h. 217

Cut off shoe, r.h.
4812062324 Cut off shoe, r.h. 218

End plate unheated, l.h. & r.h.
4812061590 End plate unheated, l.h. & r.h. 219

End plate, cpl
4812061589 End plate, cpl 220

End plate, l.h.
4812061574 End plate, l.h. 221

Holder for remote control, l.h.
4812061554 Holder for remote control, l.h. 225

End plate, r.h.
4812061588 End plate, r.h. 226

Holder for remote control, r.h.
4812061580 Holder for remote control, r.h. 230

End plate, cpl
4812064152 End plate, cpl 231

End plate, l.h.
4812064154 End plate, l.h. 232

Holder for remote control, l.h.
4812064156 Holder for remote control, l.h. 236

End plate, r.h.
4812064153 End plate, r.h. 237

Holder for remote control, r.h.
4812064155 Holder for remote control, r.h. 241

Retainer
4812228334 Retainer 242

El. end plate below heating, l.h. & r.h. - TV E
4812061630 El. end plate below heating, l.h. & r.h. 243

End plate, cpl
4812061589 End plate, cpl . . . . . See page 220

End plate, l.h.
4812061574 End plate, l.h. . . . . See page 221

Holder for remote control, l.h.
4812061554 Holder for remote control, l.h. . . . . See page 225

End plate, r.h.
4812061588 End plate, r.h. . . . . See page 226

Holder for remote control, r.h.
4812061580 Holder for remote control, r.h. . . . . See page 230

End plate, cpl
4812064152 End plate, cpl . . . . . See page 231

End plate, l.h.
4812064154 End plate, l.h. . . . . See page 232

Holder for remote control, l.h.
4812064156 Holder for remote control, l.h. . . . . See page 236

End plate, r.h.
4812064153 End plate, r.h. . . . . See page 237

Holder for remote control, r.h.
4812064155 Holder for remote control, r.h. . . . . See page 241

El. Heating
4812061604 El. Heating 250

Retainer
4812228334 Retainer . . . . . See page 242

End plate unheated with skid, l.h. & r.h.
4812061625 End plate unheated with skid, l.h. & r.h. 252

End plate, cpl
4812061589 End plate, cpl . . . . . See page 220

End plate, l.h.
4812061574 End plate, l.h. . . . . See page 221

Holder for remote control, l.h.
4812061554 Holder for remote control, l.h. . . . . See page 225

End plate, r.h.
4812061588 End plate, r.h. . . . . See page 226

Holder for remote control, r.h.
4812061580 Holder for remote control, r.h. . . . . See page 230

End plate, cpl
4812064152 End plate, cpl . . . . . See page 231

End plate, l.h.
4812064154 End plate, l.h. . . . . See page 232

Holder for remote control, l.h.
4812064156 Holder for remote control, l.h. . . . . See page 236

End plate, r.h.
4812064153 End plate, r.h. . . . . See page 237

Holder for remote control, r.h.
4812064155 Holder for remote control, r.h. . . . . See page 241

Slide plate
4812061605 Slide plate 259

Retainer
4812228334 Retainer . . . . . See page 242

4812000059 Kit retainer height adjustment Gradeline
4812000059 Kit retainer height adjustment Gradeline 261

D275131700 Retainer highth adjustment Gradeline
D275131700 Retainer height adjustment Gradeline 262

Adjusting spindle
4720006889 Adjusting spindle 263

Swinging arm
4720007201 Swinging arm 265

4812015870 Retainer hight adjustment
4812015870 Kit, height adjustment MOBA-MATIC 266

Retainer hight adjustment Moba
4720005918 Extension arm 267

Swinging arm
4720007201 Swinging arm . . . . . See page 265

Extension arm
4720005790 Extension arm 269

Height regulator holder, cpl.
4720007200 Height regulator holder, compl. 270

4812061383 Levelling equipment
4812061383 Levelling equipment 271

4812074662 Levelling bar
4812074662 Levelling bar 272

4720006020 Adapter kit for level
4720006020 Level 274

4812076864 Sonic sensor, auger con.
4812076864 Sonic sensor, auger 275

Electric, sonic sensor
4812076873 Electric, sonic sensor 276

Electric, sonic sensor
4812076874 Electric, sonic sensor 277

4812082524 Material thickness measurement cpl.
4812082524 Material thickness measurement 278

Accessories

Decals, TV
4812018578 Decals 279

Decals, TVE
4812018579 Decals 280

Service, repair and wear part kits, TV Wear part and Inspection kits

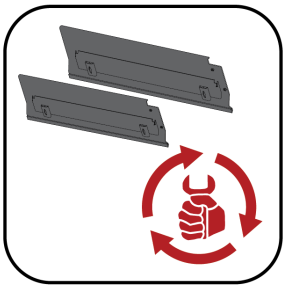
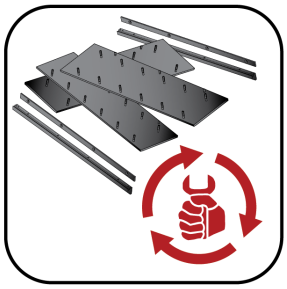
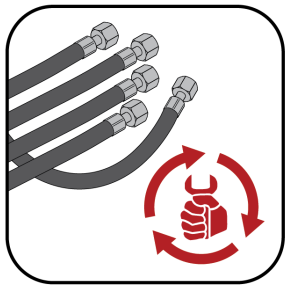

Item	Part No.	Name	Qty	L	C	SN INFO
1		Bearing KITS				
1.1	4812074166	Bearing kit tamper wing, center	1			
1.2	4812074206	Bearing kit tamper drive, center	1			
1.3	4812074168	Bearing kit tamper wing, extension	1			
1.4	4812074169	Bearing kit tamper drive, extension	1			
2		Guide plate KITS				
2.1	4812061266	Kit, tamper guide plates	1			
3		Plate / bars KITS				
3.1	4812075322	Wear part kit screed plates, tamper bar	1			
3.2	4812062002	Screed plate, gas, H500	1			
3.3	4812074167	Wear part kit tamper bar	1			
4	Gas hose KITS	Kit, gas hose set				
4.1	4812075126	Kit, gas hose set	1			

Bearing KITS 4812074166 Bearing kit tamper wing, center

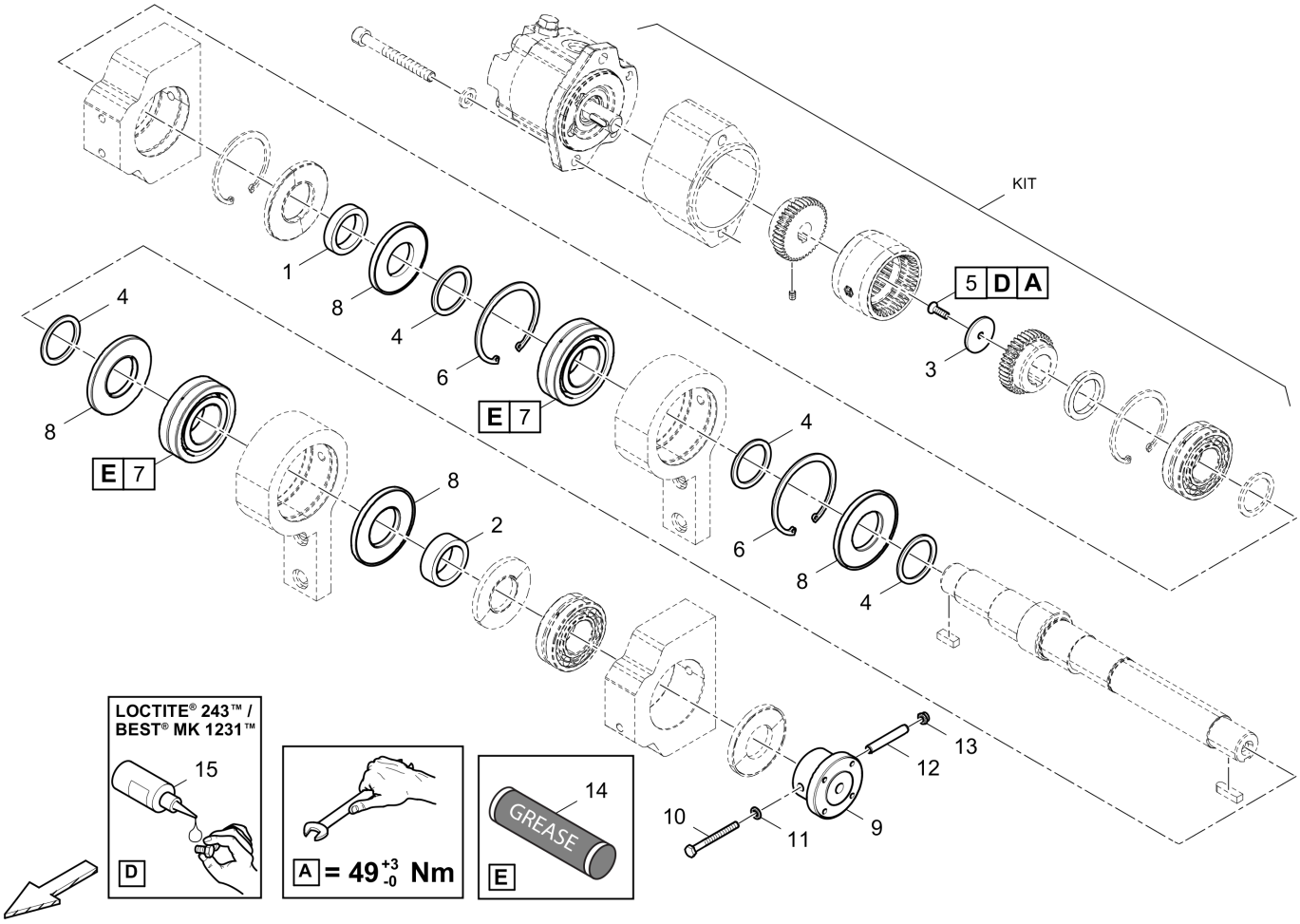

Item	Part No.	Name	Qty	L	C	SN INFO
KIT	4812074166	Bearing kit tamper wing, center	1			
1	4812013285	Spacer	1			
2	4812014111	Spacer	1			
3	4812016298	Washer	1			
4	0324155159	Supporting washer	4			
5	0216195783	Countersunk screw	1			
6	4749900351	Circlip	2			
7	4749540044	Bearing	2			
8	4749302735	Sealing moulded product	4			
9	4812014484	Flange	1			
10	0147125603	Hex. head screw	1			
11	0301232100	Plain washer	1			
12	0108169167	Dowel pin	1			
13	0291110800	Locknut	1			
14	4812161897	Paver Grease - 1 cartridge	1			
15	D930290215	Sealant	1			

Bearing KITS 4812074206 Bearing kit tamper drive, center

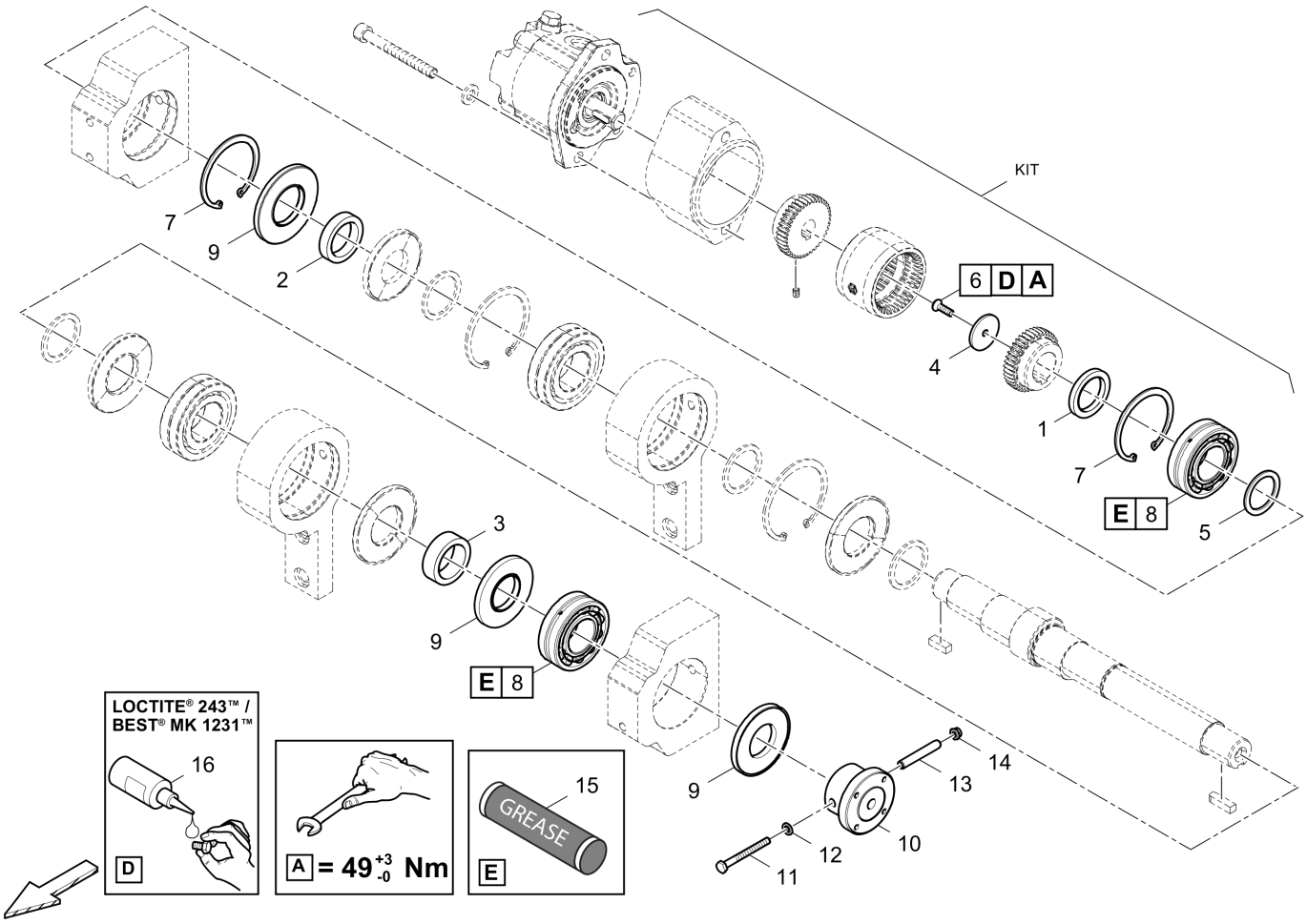

Item	Part No.	Name	Qty	L	C	SN INFO
KIT	4812074206	Bearing kit tamper drive, center	1			
1	4812014264	Spacer	1			
2	4812013285	Spacer	1			
3	4812014111	Spacer	1			
4	4812016298	Washer	1			
5	D932120750	Shim washer	1			
6	0216195783	Countersunk screw	1			
7	D936029651	Circlip	2			
8	4812011215	Bearing	2			
9	4812019069	Packing	3			
10	4812014484	Flange	1			
11	0147125603	Hex. head screw	1			
12	0301232100	Plain washer	1			
13	0108169167	Dowel pin	1			
14	0291110800	Locknut	1			
15	4812161897	Paver Grease - 1 cartridge	1			

Item	Part No.	Name	Qty	L	C	SN INFO
16	D930290215	Sealant	1			

Bearing KITS 4812074168 Bearing kit tamper wing, extension

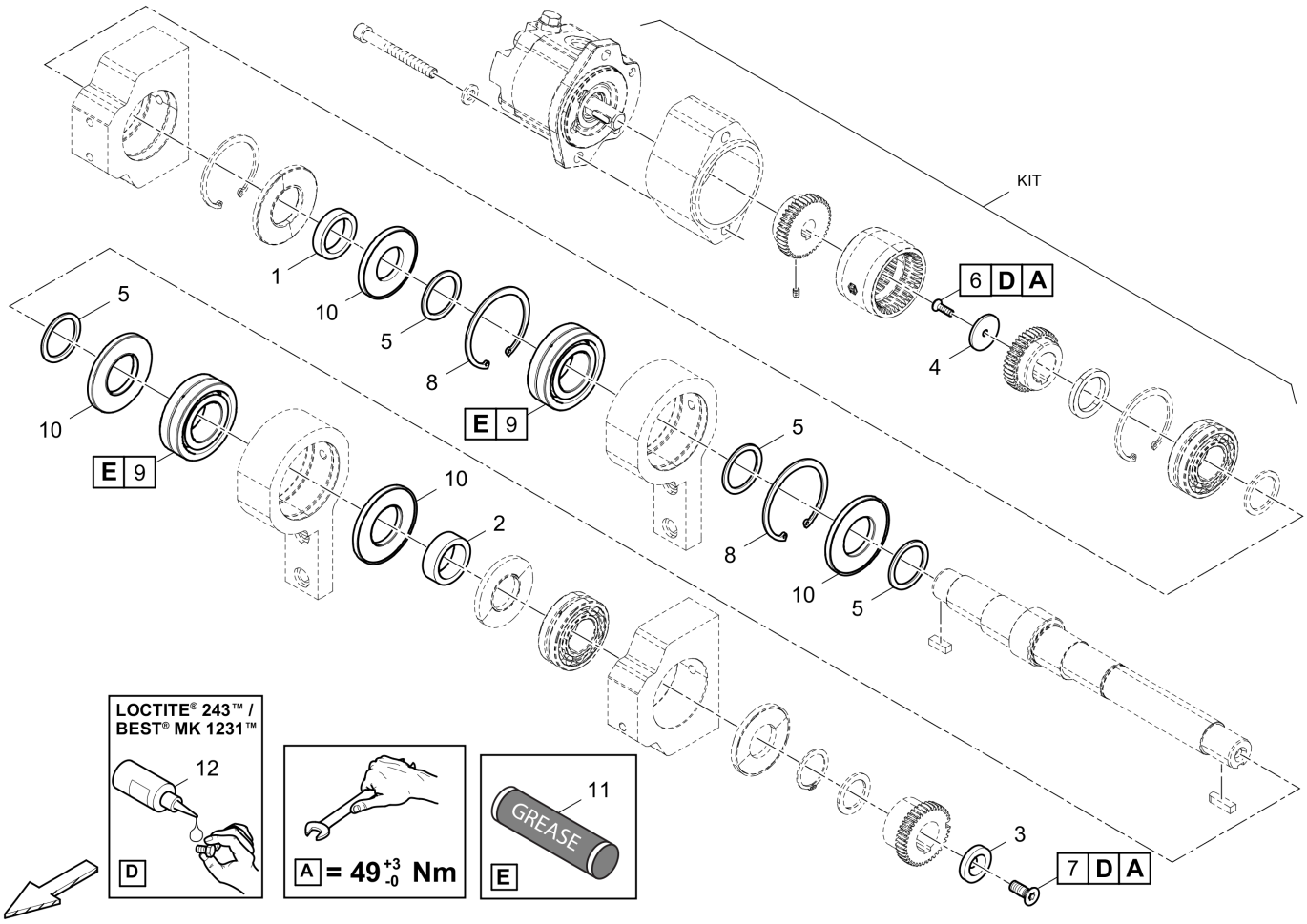

Item	Part No.	Name	Qty	L	C	SN INFO
KIT	4812074168	Bearing kit tamper wing, extension	1			
1	4812013285	Spacer	1			
2	4812014111	Spacer	1			
3	4812012350	Washer	1			
4	4812016298	Washer	1			
5	0324155159	Supporting washer	4			
6	0216195783	Countersunk screw	1			
7	0216195773	Countersunk screw	1			
8	4749900351	Circlip	2			
9	4749540044	Bearing	2			
10	4749302735	Sealing moulded product	4			
11	4812161897	Paver Grease - 1 cartridge	1			
12	D930290215	Sealant	1			

Bearing KITS 4812074169 Bearing kit tamper drive, extension

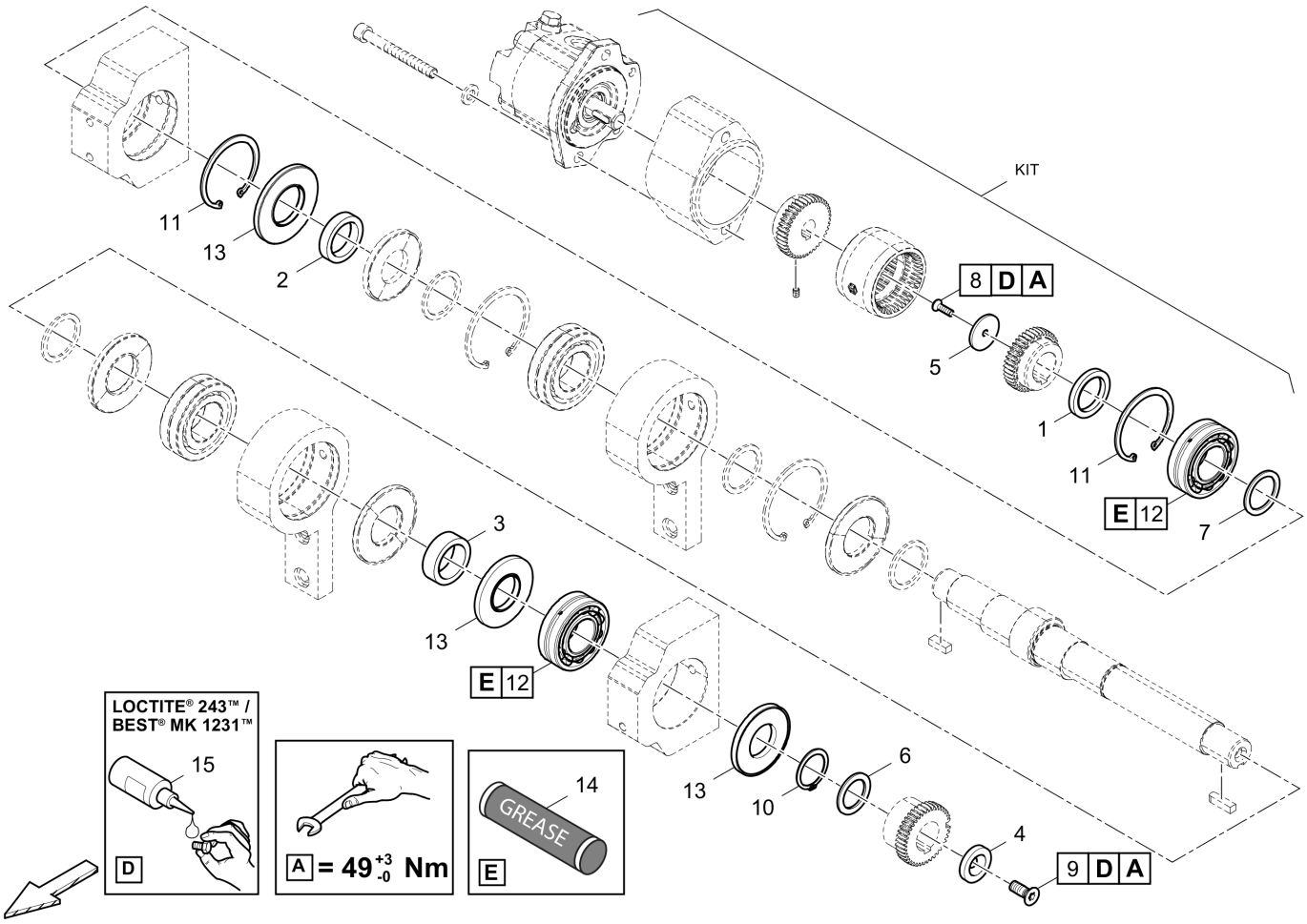

Item	Part No.	Name	Qty	L	C	SN INFO
KIT	4812074169	Bearing kit tamper drive, extension	1			
1	4812014264	Spacer	1			
2	4812013285	Spacer	1			
3	4812014111	Spacer	1			
4	4812012350	Washer	1			
5	4812016298	Washer	1			
6	0324155140	Supporting washer	1			
7	D932120750	Shim washer	1			
8	0216195783	Countersunk screw	1			
9	0216195773	Countersunk screw	1			
10	D936002194	Circlip	1			
11	D936029651	Circlip	2			
12	4812011215	Bearing	2			
13	4812019069	Packing	3			
14	4812161897	Paver Grease - 1 cartridge	1			
15	D930290215	Sealant	1			

Guide plate KITS 4812061266 Kit, tamper guide

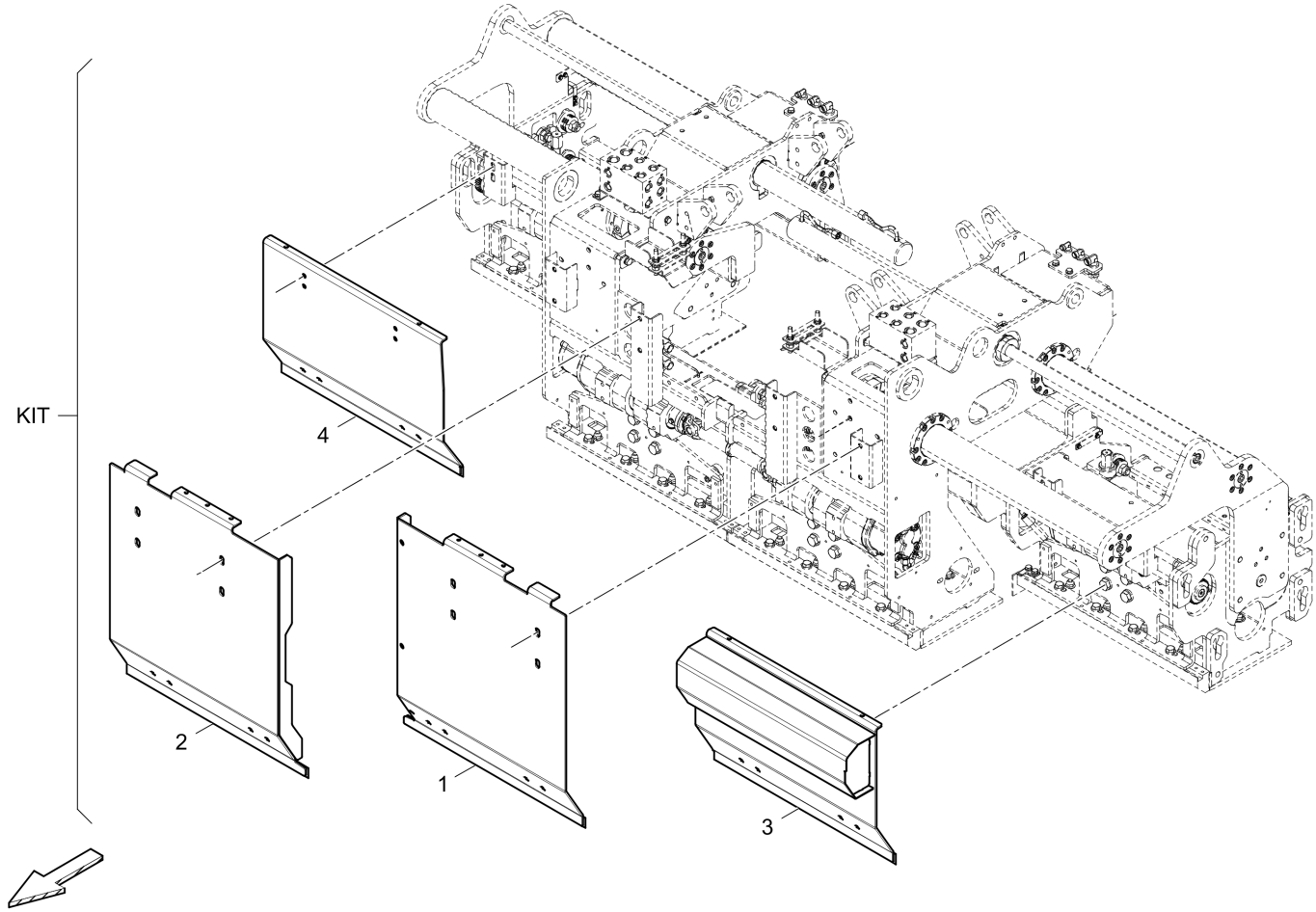

Item	Part No.	Name	Qty	L	C	SN INFO
KIT	4812061266	Kit, tamper guide plates	1			
1	4812061246	Guard plate, l.h.	1			
2	4812061249	Guard plate, r.h.	1			
3	4812061250	Tamper guide plate, l.h.	1			
4	4812061309	Tamper guide plate, r.h.	1			

Plate / bars KITS 4812062002 Screed plate, gas, H500

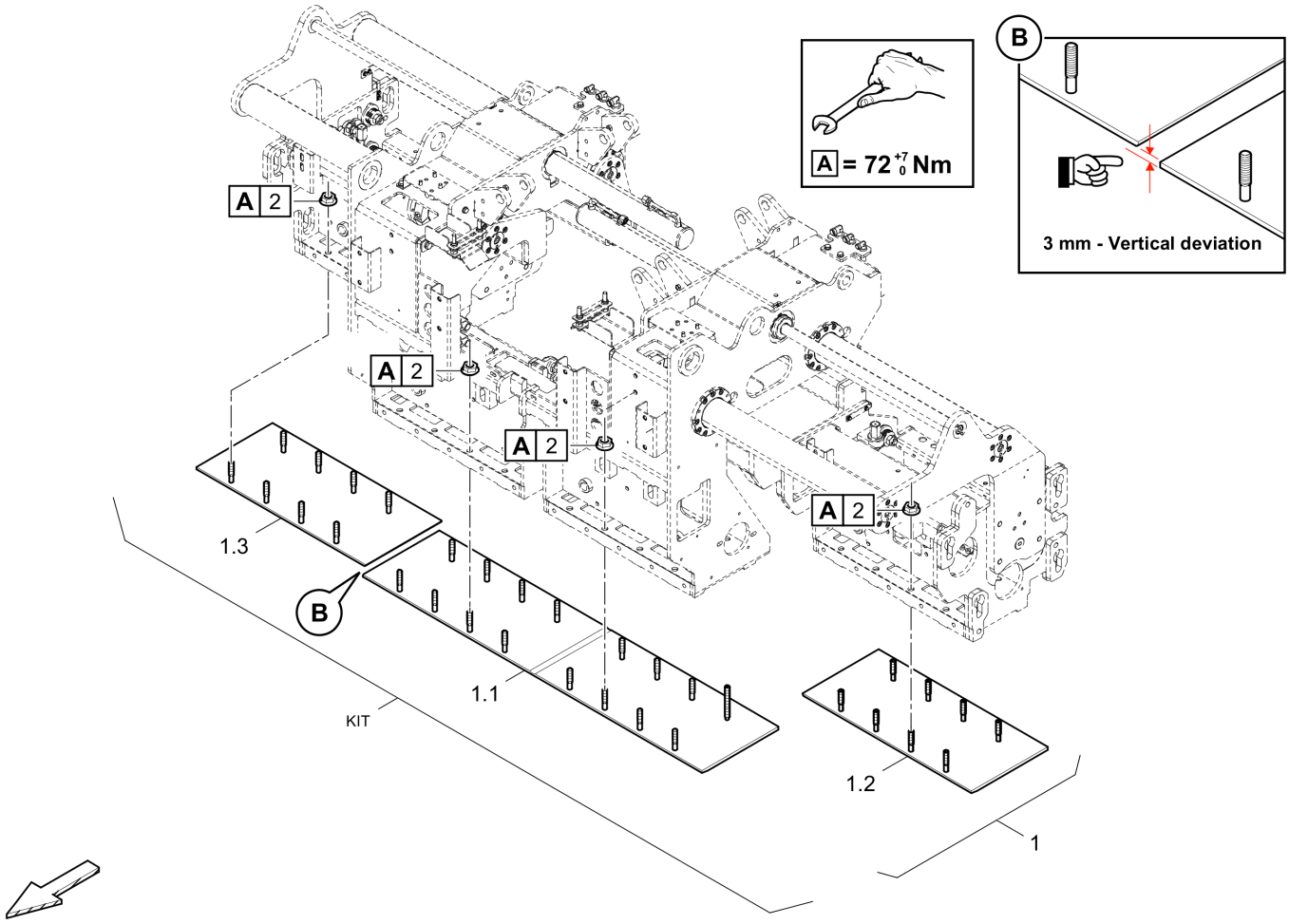

Item	Part No.	Name	Qty	L	C	SN INFO
KIT	4812062002	Screed plate, gas, H500	1			
1	4812062003	Kit, Screed plate, H500	1			
1.1	4812072593	Screed plate, inside	1			
1.2	4812060950	Screed plate, l.h.	1			
1.3	4812060961	Screed plate, r.h.	1			
2	0261109156	Tensilock nut	32			

Plate / bars KITS 4812074167 Wear part kit tamper bar

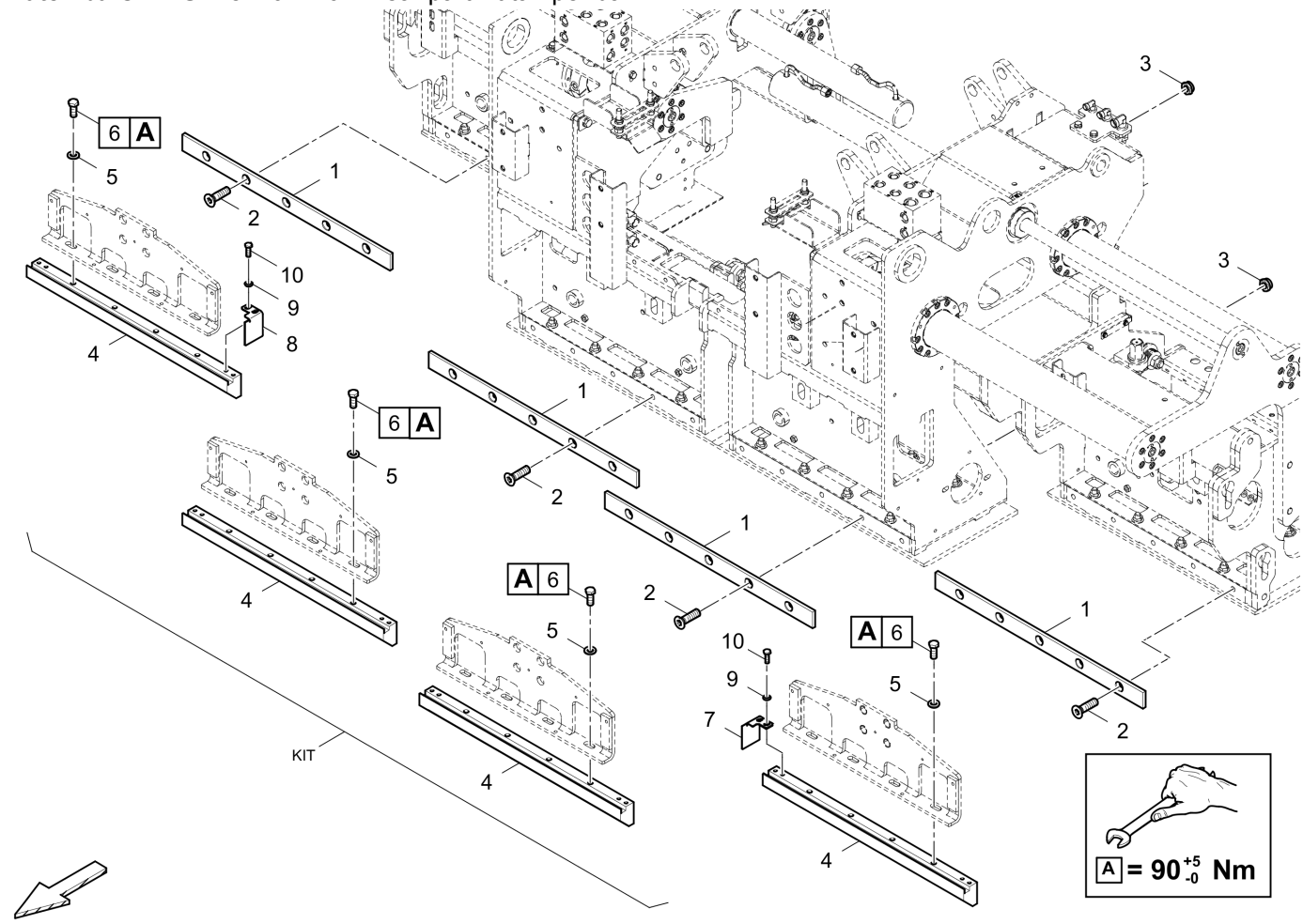

Item	Part No.	Name	Qty	L	C	SN INFO
KIT	4812074167	Wear part kit tamper bar	1			
1	4812014414	Wear plate	4			
2	3370044501	Countersunk screw	20			
3	5541396800	Hexagon nut	20			
4	4812064056	Tamper bar	4			
5	0333310052	Flat washer	16			
6	0147140103	Screw	16			
7	4812024081	Angle	1			
8	4812071457	Angle, r.h.	1			
9	0333310050	Lock washer	4			
10	0147132503	Hexagon bolt	4			

Plate / bars KITS 4812075322 Wear part kit screed plates, tamper bar

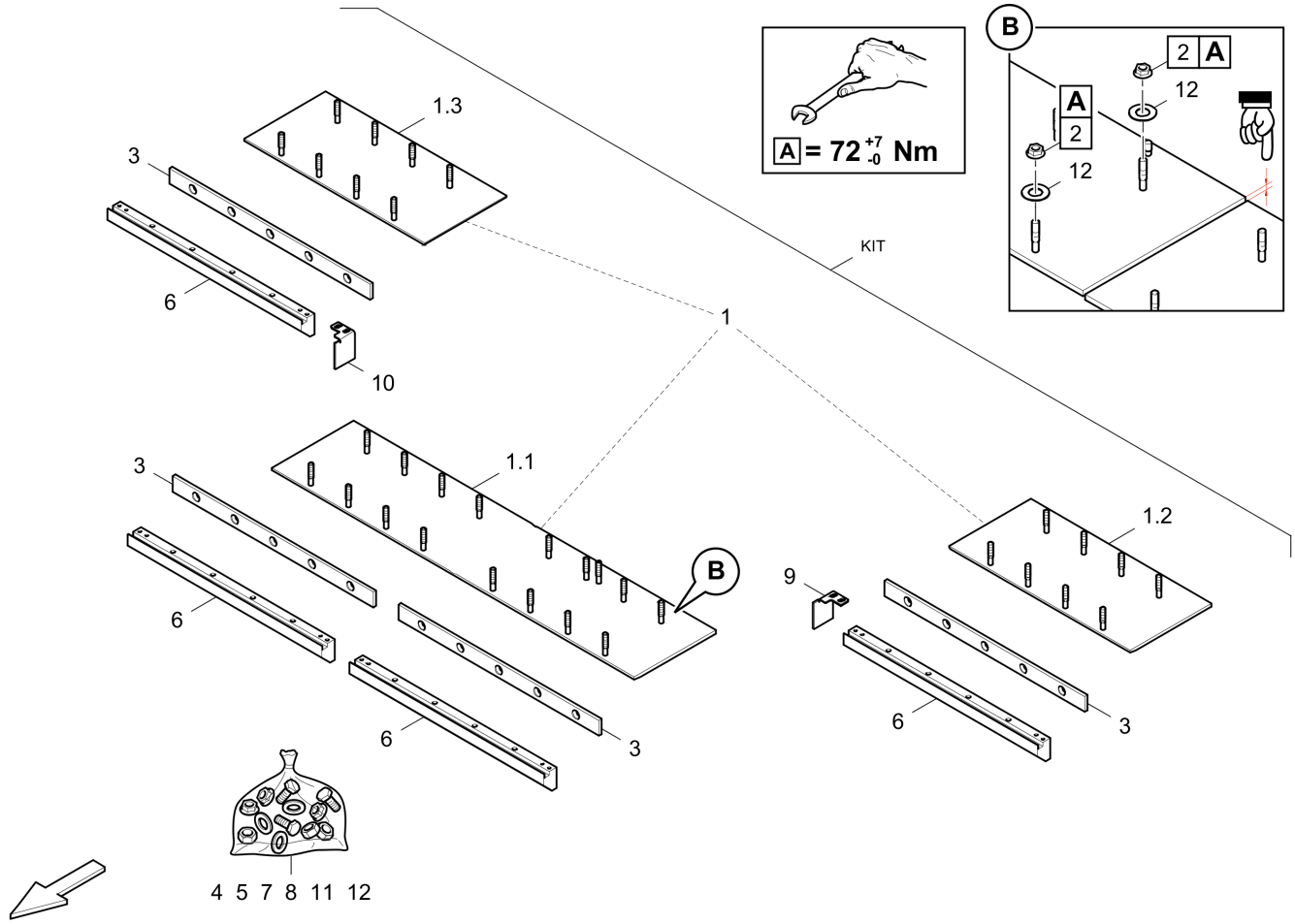

Item	Part No.	Name	Qty	L	C	SN INFO
KIT	4812075322	Wear part kit screed plates, tamper bar				
1	4812062003	Kit, Screed plate, H500	1			
1.1	4812072593	Screed plate, inside	1			
1.2	4812060950	Screed plate, l.h.	1			
1.3	4812060961	Screed plate, r.h.	1			
2	0261109156	Tensilock nut	32			
3	4812014414	Wear plate	4			
4	3370044501	Countersunk screw	20			
5	5541396800	Hexagon nut	20			
6	4812064056	Tamper bar	4			
7	0333310052	Flat washer	16			
8	0147140103	Screw	16			
9	4812024081	Angle	1			
10	4812071457	Angle, r.h.	1			
11	0333310050	Lock washer	4			
12	0147132503	Hexagon bolt	4			

Gas hose KITS 4812075126 Kit, gas hose set

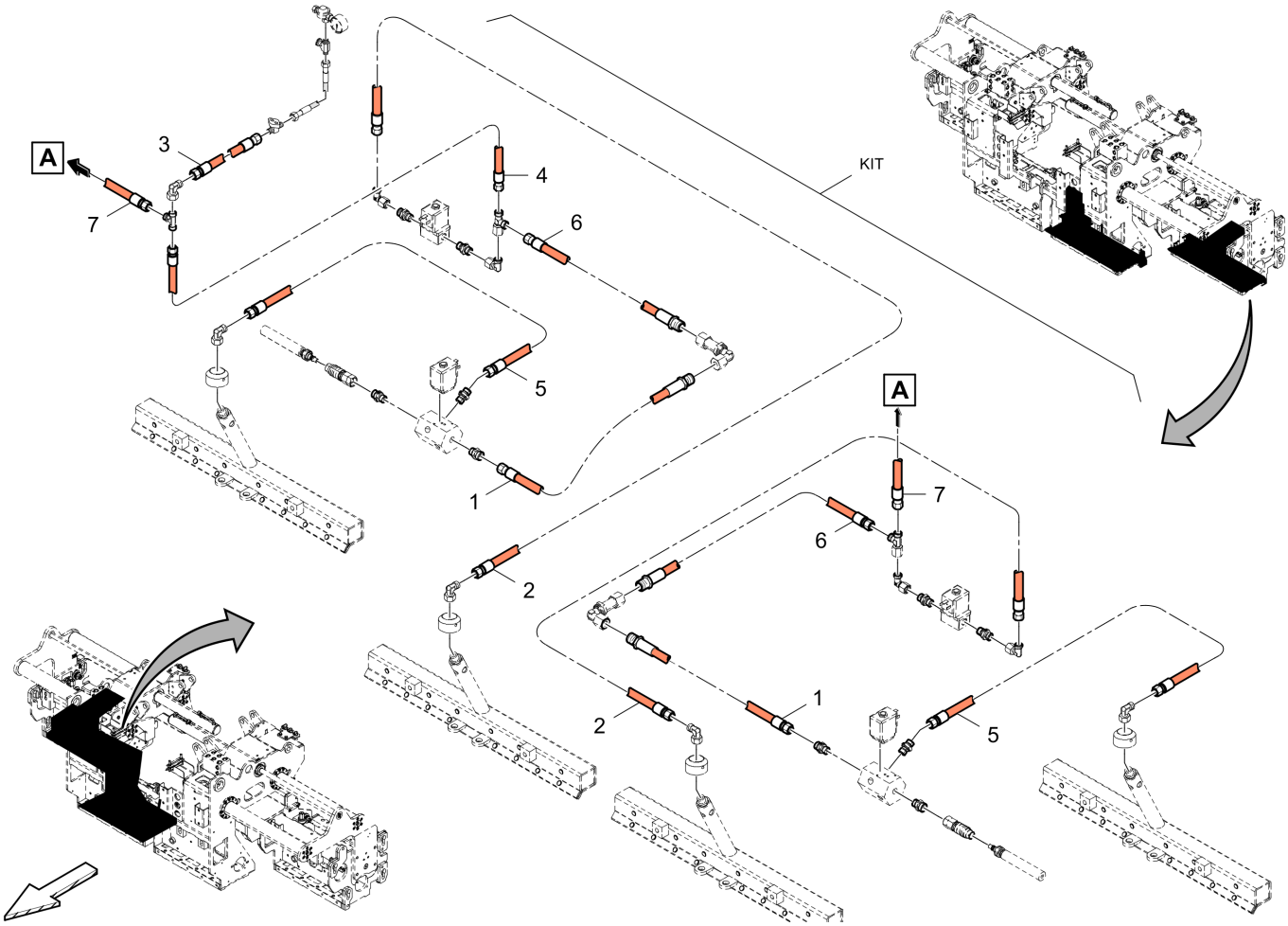

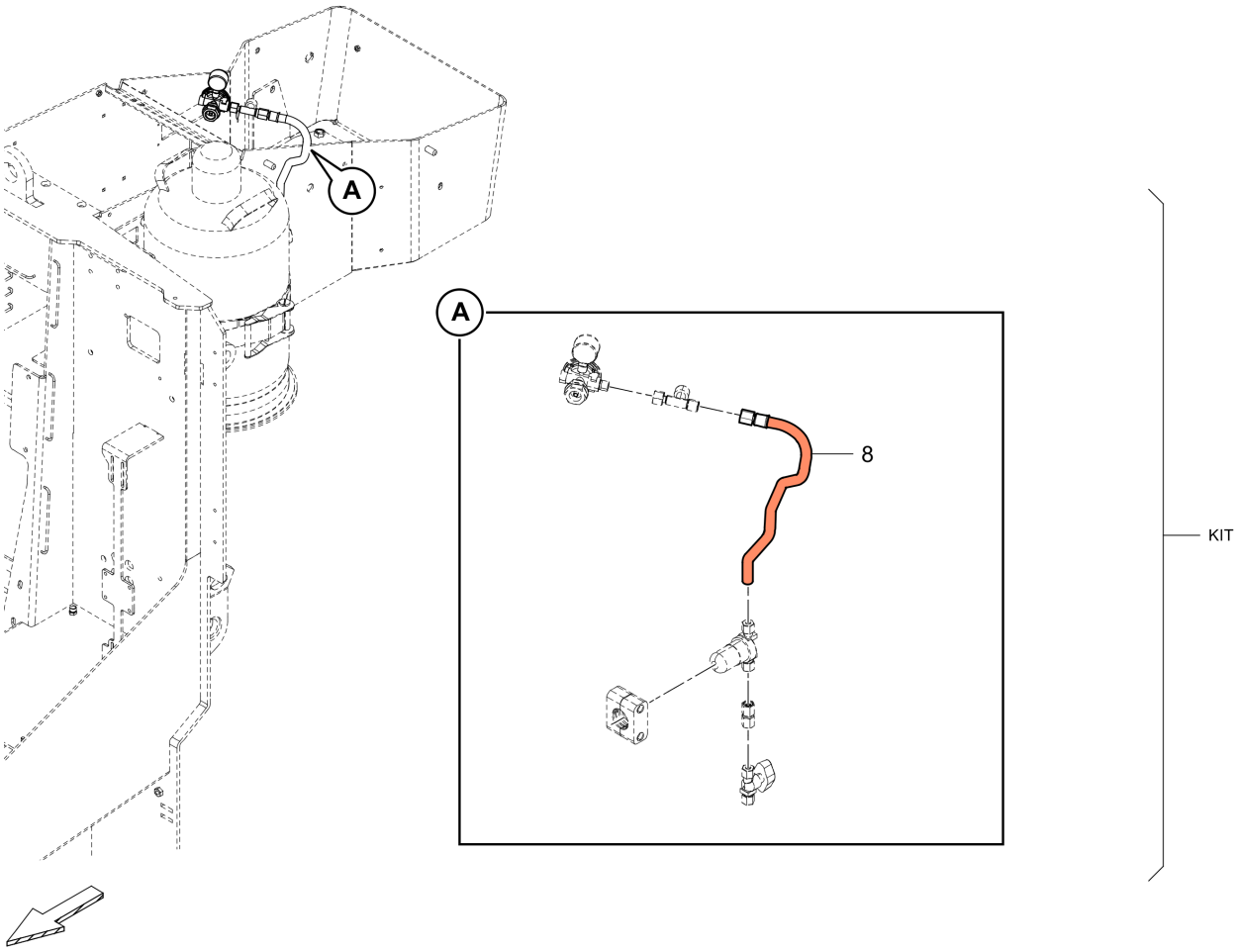

Item	Part No.	Name	Qty	L	C	SN INFO
KIT	4812075126	Kit, gas hose set	1			
1	D930657560	Gas hose	2			
2	4812072661	Gas hose	2			
3	4749240737	Gas hose	1			
4	4749240540	Gas hose	1			
5	4700665977	Gas hose	2			
6	4812072659	Gas hose	2			
7	4749240740	Hose	1			
8	4812238023	Hose	1			

Service, repair and wear part kits, TV E Wear part and Inspection kits

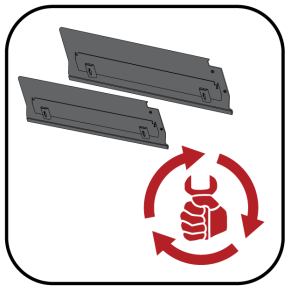

Item	Part No.	Name	Qty	L	C	SN INFO
1		Bearing KITS				
1.1	4812074166	Bearing kit tamper wing, center	1			
1.2	4812074206	Bearing kit tamper drive, center	1			
1.3	4812074168	Bearing kit tamper wing, extension	1			
1.4	4812074169	Bearing kit tamper drive, extension	1			
2		Guide plate KITS				
2.1	4812061266	Kit, tamper guide plates	1			
3		Plate / bars KITS				
3.1	4812074170	Wear part kit screed plates, tamper bar	1			
3.2	4812071249	Screed plate, gas-electric, H500	1			
3.3	4812074167	Wear part kit tamper bar	1			
4		Heating element KITS				
4.1	4812074165	Set of heating elements	1			

Referenced Pages

4812074166 Bearing kit tamper wing, center 2
4812074206 Bearing kit tamper drive, center 3
4812074168 Bearing kit tamper wing, extension 5
4812074169 Bearing kit tamper drive, extension 6

Referenced Pages

4812061266 Kit, tamper guide 7

Plate / bars KITS 4812071249 Screed plate, electric, H500

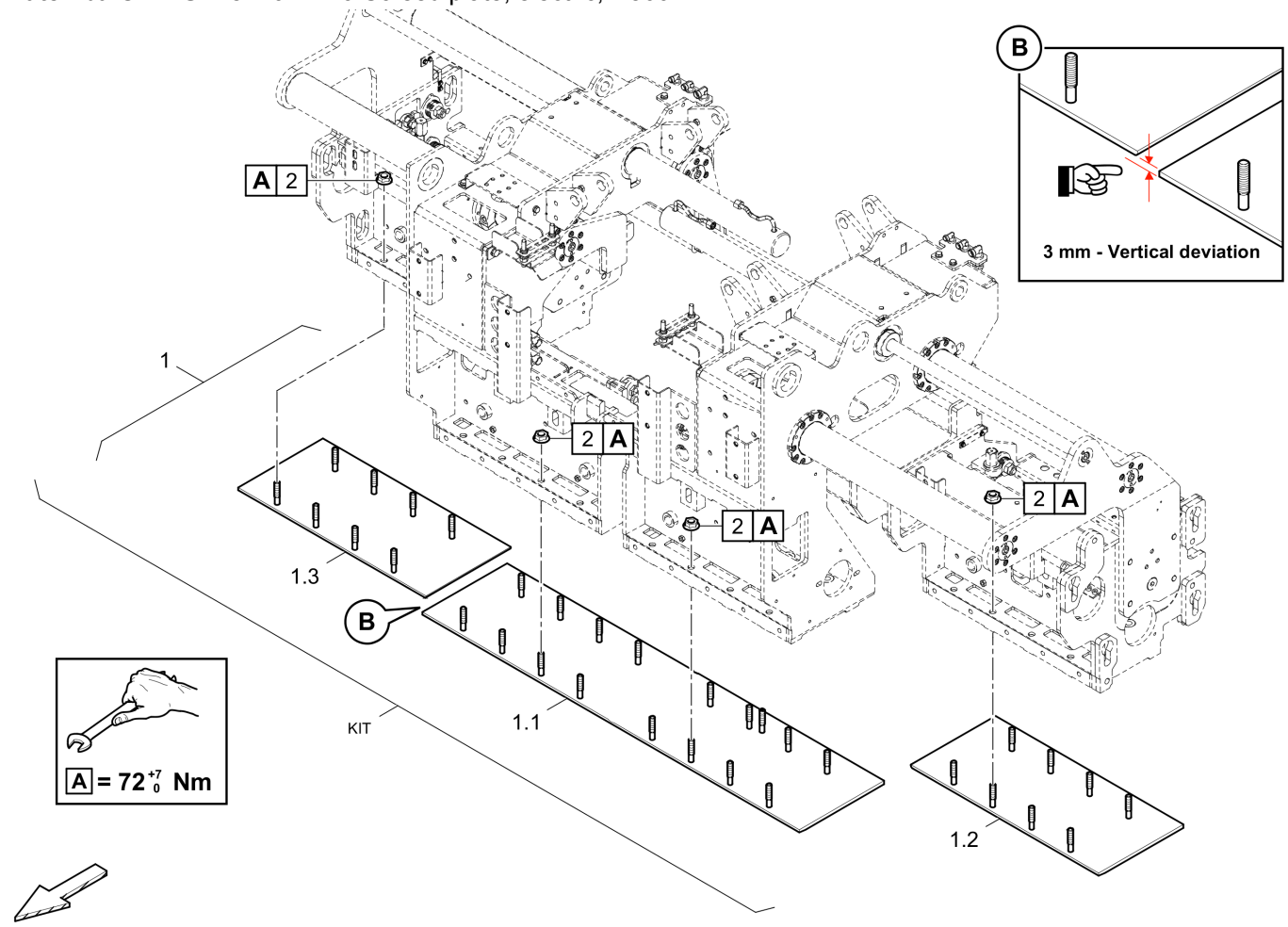

Item	Part No.	Name	Qty	L	C	SN INFO
KIT	4812071249	Screed plate, gas-electric, H500	1			
1	4812071250	Kit, Screed plate, H500	1			
1.1	4812071252	Screed plate, inside	1			
1.2	4812060950	Screed plate, l.h.	1			
1.3	4812060961	Screed plate, r.h.	1			
2	0261109156	Tensilock nut	32			

Plate / bars KITS 4812074170 Wear part kit screed plates, tamper bar

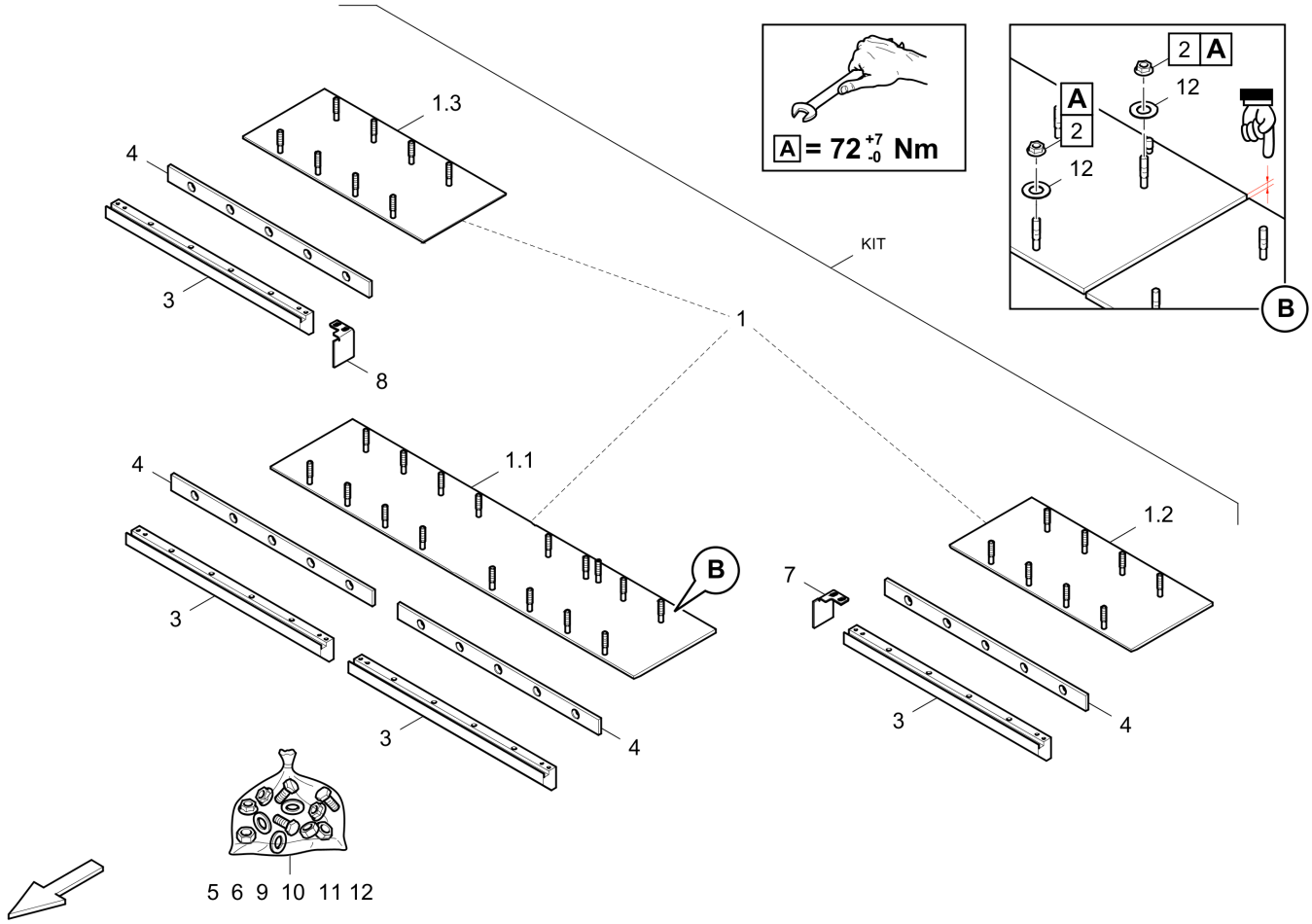

Item	Part No.	Name	Qty	L	C	SN INFO
KIT	4812074170	Wear part kit screed plates, tamper bar	1			
1	4812071250	Kit, Screed plate, H500	1			
1.1	4812071252	Screed plate, inside	1			
1.2	4812060950	Screed plate, l.h.	1			
1.3	4812060961	Screed plate, r.h.	1			
2	0261109156	Tensilock nut	32			
3	4812064056	Tamper bar	4			
4	4812014414	Wear plate	4			
5	3370044501	Countersunk screw	20			
6	5541396800	Hexagon nut	20			
7	4812024081	Angle	1			
8	4812071457	Angle, r.h.	1			
9	0333310052	Flat washer	16			
10	5530810000	Hexagon head screw	16			
11	0333310050	Lock washer	4			
12	0147132503	Hexagon bolt	4			

Referenced Pages

4812074167 Wear part kit tamper bar 9

Heating Element KITS 4812074165 Set of heating elements

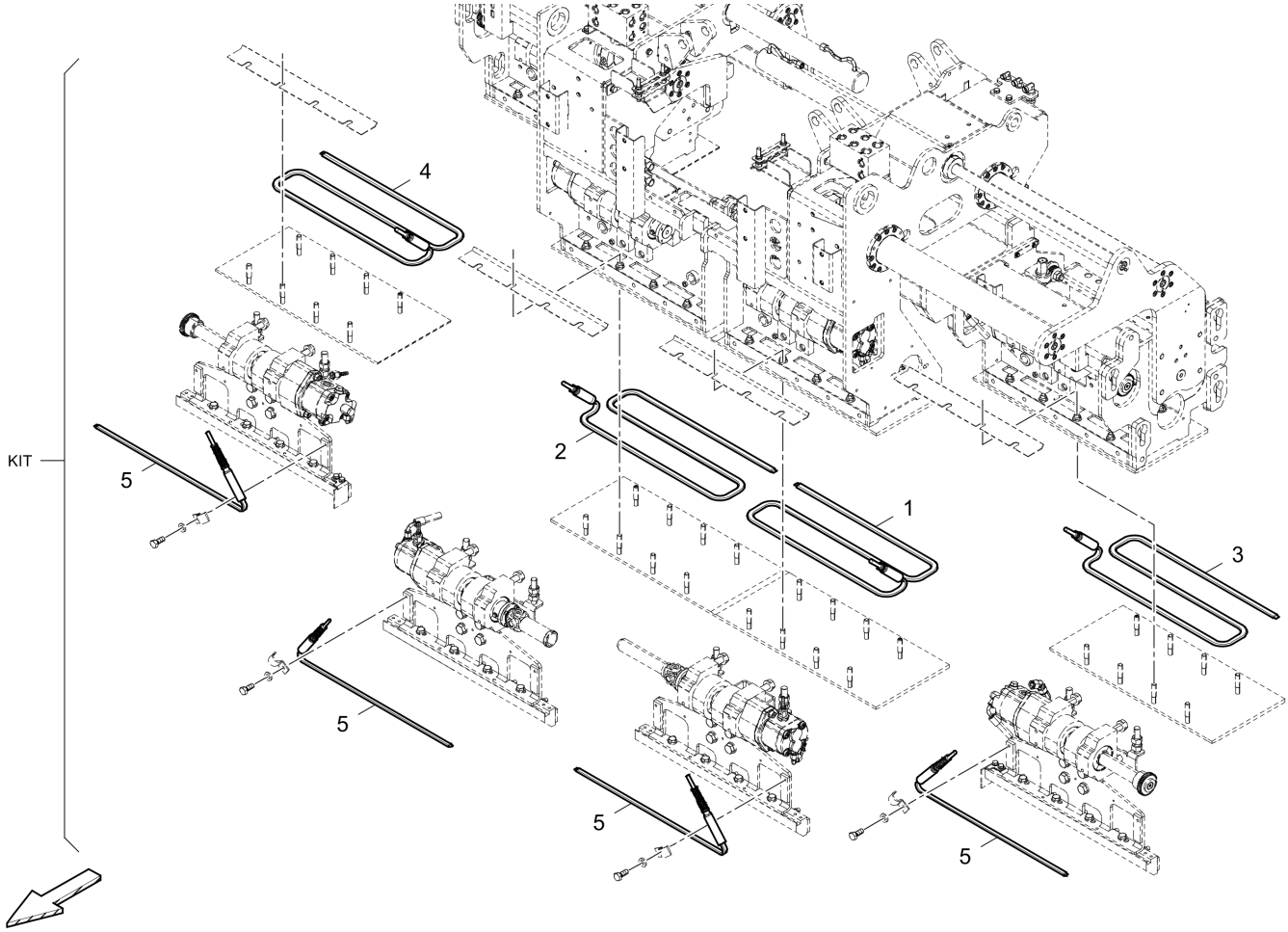

Item	Part No.	Name	Qty	L	C	SN INFO
KIT	4812074165	Set of heating elements	1			
1	4812217575	Flat tube heater, inside, l.h.	1			
2	4812217576	Flat tube heater, inside, r.h.	1			
3	4812217577	Flat tube heater, outside, l.h.	1			
4	4812217578	Flat tube heater, outside, r.h.	1			
5	4812217580	Flat tube heater	4			

Basic screed 4812061076A Basic screed

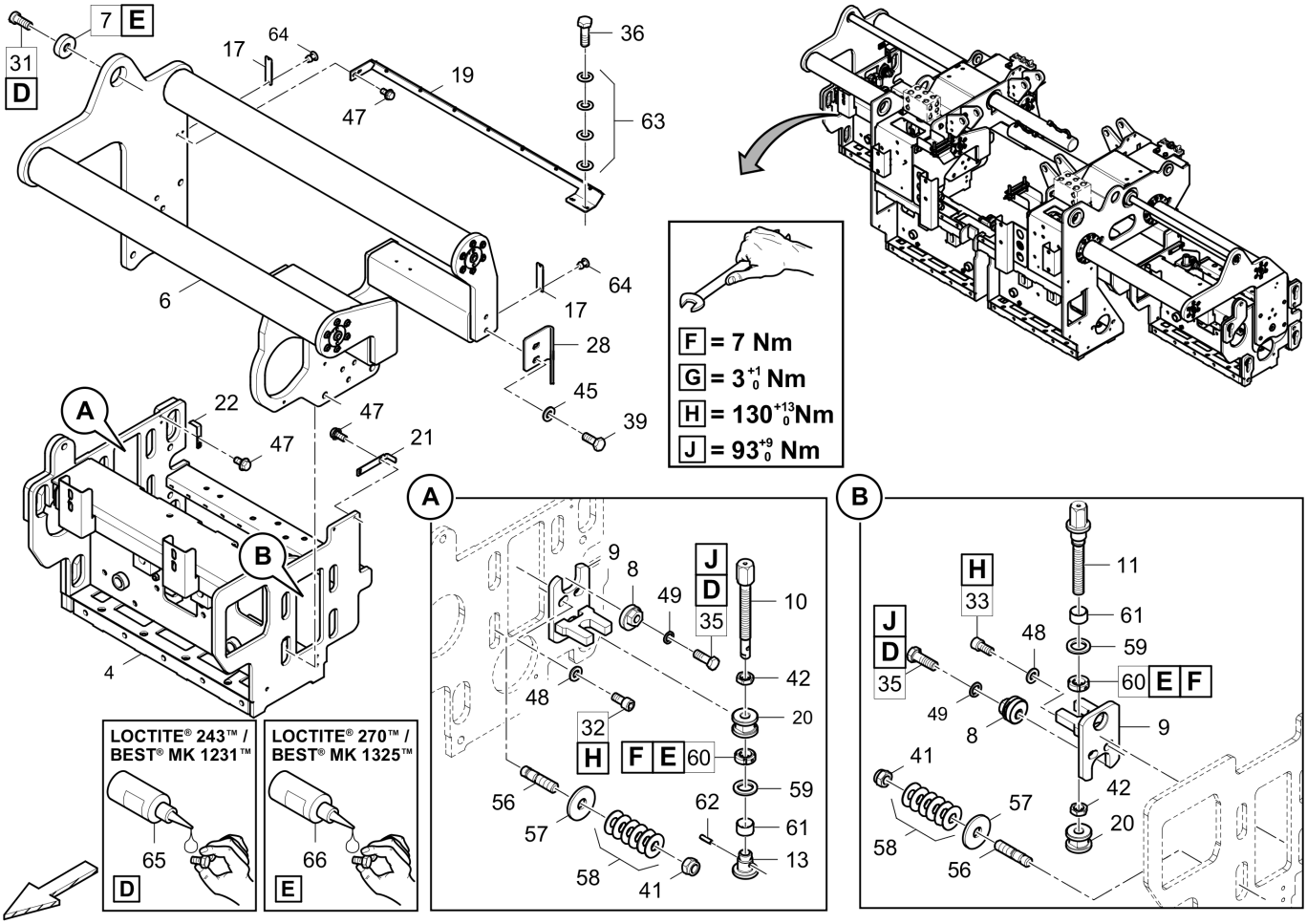

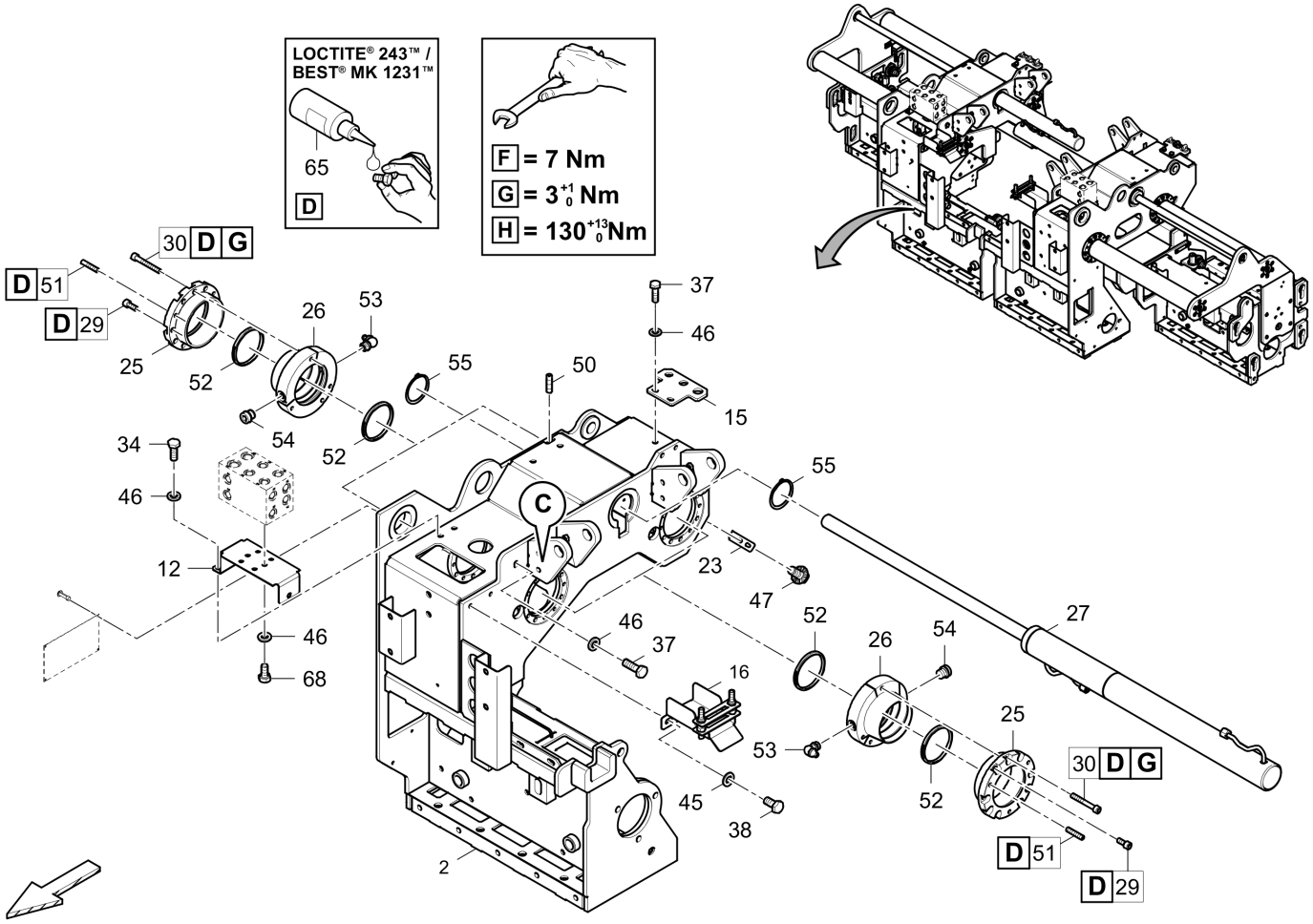
LOCTITE® 243™ / BEST® MK 1231™
65
D
F = 7 Nm
G = 3 +1 0 Nm
H = 130 +13 0 Nm
30 D G
D 51
D 29
25
52
26
53
54
55
52
50
37
46
15
34
46
12
46
68
C
23
47
55
27
52
26
54
46
37
16
53
25
52
30 D G
45
38
2
D 51
D 29

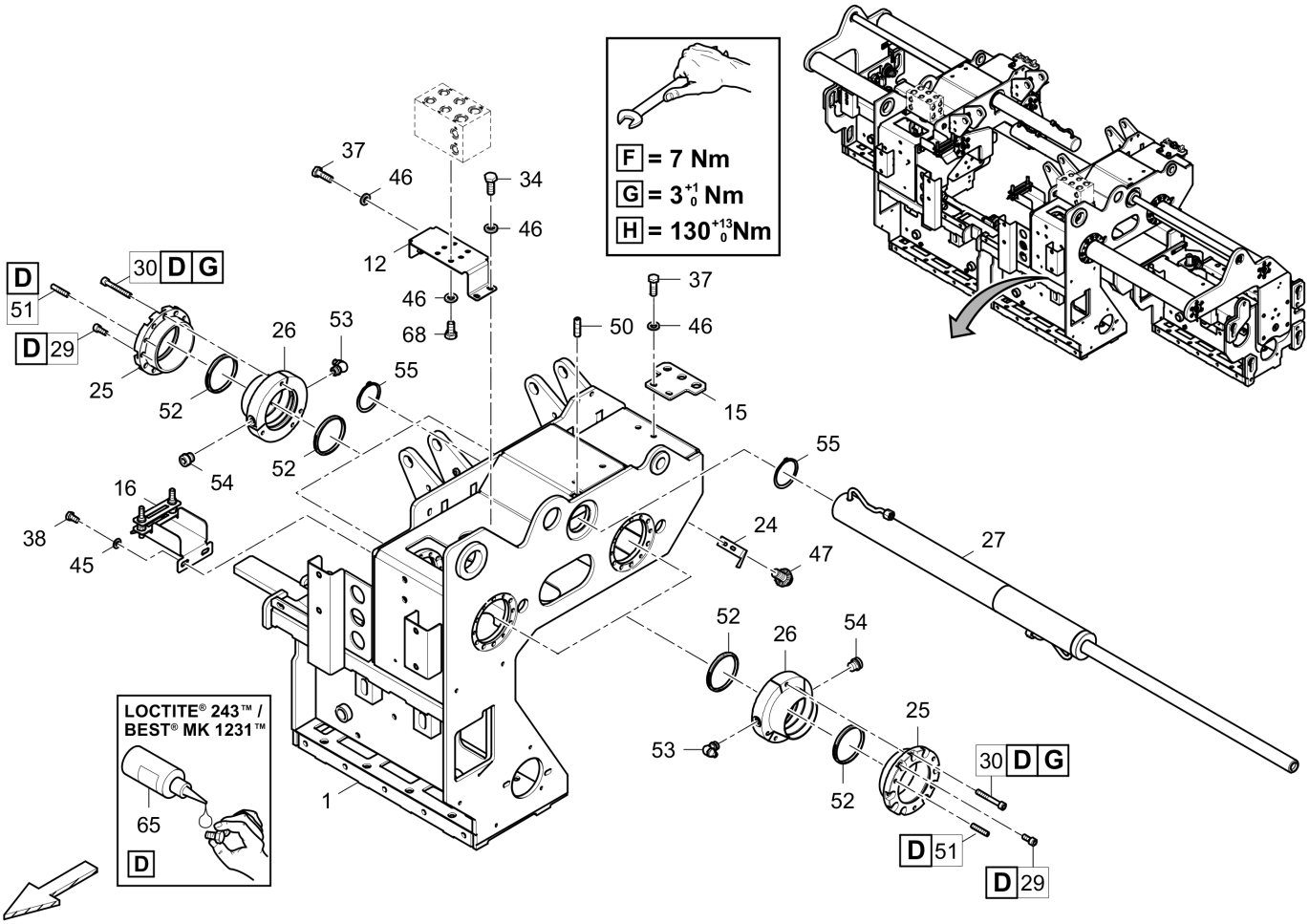
F = 7 Nm
G = 3 +1 0 Nm
H = 130 +13 0 Nm
LOCTITE® 243™ / BEST® MK 1231™
D
G
1
12
15
16
24
25
26
27
29
30
34
37
38
45
46
47
50
51
52
53
54
55
65
68

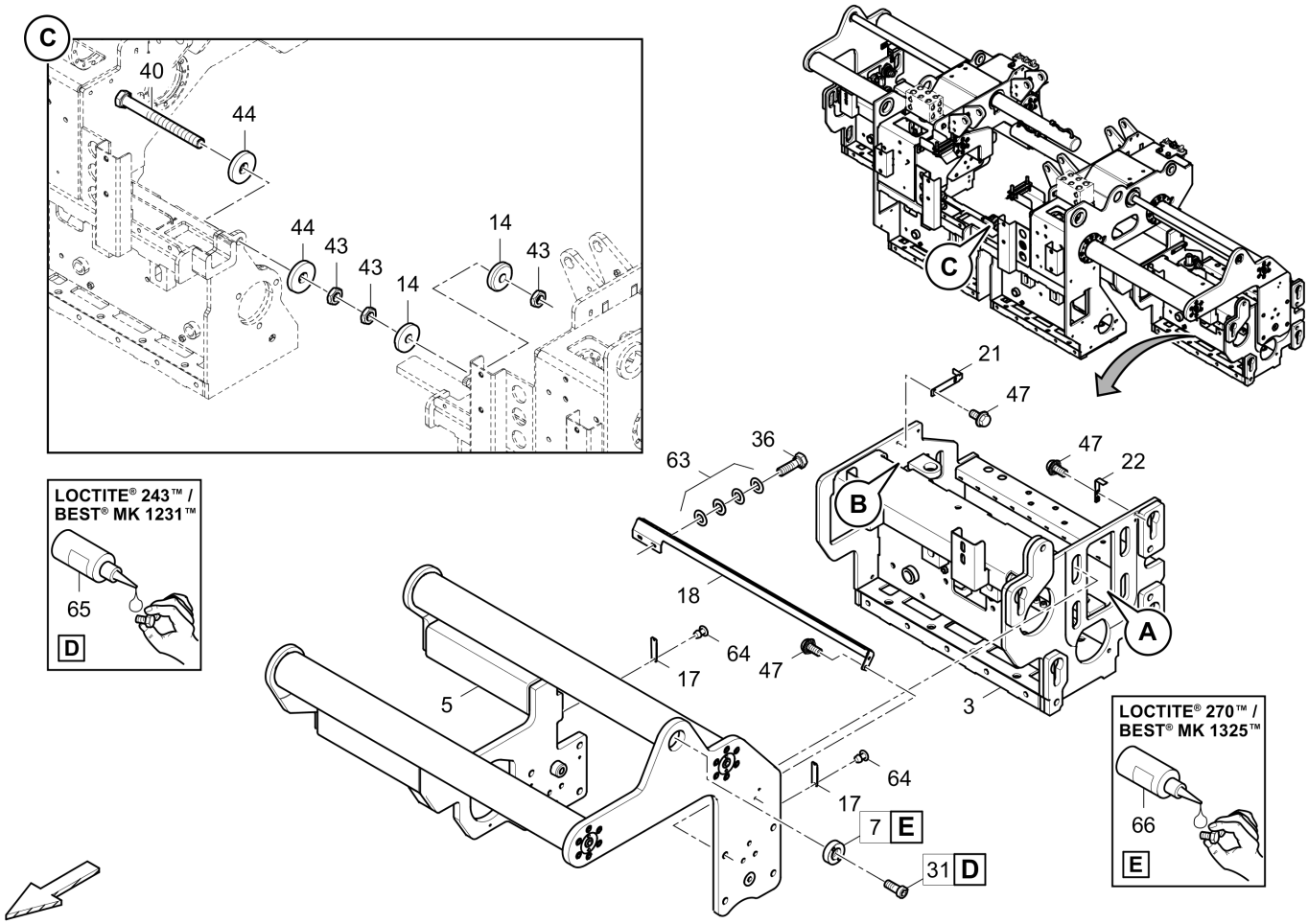

Item	Part No.	Name	Qty	L	C	SN INFO
1	4812061068	Carbody, l.h.	1			
2	4812061070	Carbody, r.h.	1			
3	4812061072	Adjuster, l.h.	1			
4	4812061074	Adjuster, r.h.	1			
5	4812061128	Extension unit, l.h.	1			
6	4812061177	Extension unit, r.h.	1			
7	4812061002	Bushing	2			
8	4812202681	Eccentric	4			
9	4812015893	Guide	4			
10	4812015853	Spindle	2			
11	4812015837	Spindle	2			
12	4812075507	Retainer	2			
13	4812015838	Bushing	2			
14	4812065220	Stop washer	2			
15	4812217949	Plate	2			
16	4812024535	Hose guide	2			
17	4812061132	Scale	4			

Item	Part No.	Name	Qty	L	C	SN INFO
18	4812061133	Scale holder, l.h.	1			
19	4812061145	Scale holder, r.h.	1			
20	4812015889	Adjusting nut	4			
21	4812019216	Pointer	2			
22	4812024273	Pointer	2			
23	4812075336	Pointer, r.h.	1			
24	4812061106	Pointer, l.h.	1			
25	4812024198	Counter flange	8			
26	4812023718	Bearing	8			
27		Hydraulic cylinder	2			
27.1	4812015084	Hydraulic cylinder	1			
27.1.1	4812073955	Seal kit	1			
27.2	4812015086	Hydraulic cylinder			Not vali d	
28	4812072300	Spill plate	1			
29	0211132303	Hex. socket screw	40			
30	0211110268	Hexagon socket head cap screw	32			
31	D939390767	Screw	2			
32	0211110402	Hexagon socket head cap screw	4			
33	0211110330	Hexagon socket head cap screw	4			
34	0147132303	Hexagon bolt	4			
35	0147140203	Hex. head screw	4			
36	0147120703	Screw	4			
37	0147132503	Hexagon bolt	6			
38	0147136003	Screw cap	4			
39	0147136203	Screw	2			
40	D938150889	Hexagon screw	1			
41	5730007656	Hexagon nut	16			
42	0261109961	Hexagon nut	4			
43	0261211400	Hexagon nut	3			
44	D939130018	Washer	2			
45	0333310051	Lock washer	6			
46	0333310050	Lock washer	16			
47	0147300075	Tensilock screw	16			
48	D939776117	Lock washer	8			
49	4749901808	Washer	4			
50	0190124135	Threaded pin	2			
51	D937948554	Threaded pin	24			

Item	Part No.	Name	Qty	L	C	SN INFO
52	4812063869	Stripper	16			
53	D935513220	Grease nipple	8			
54	D937880060	Plug screw	8			
55	4812081245	Circlip	4			
56	4812215360	Stud	16			
57	0300013048	Flat washer	16			
58	D932800738	Cup spring 40x16,3x2 DIN 2093	96			
59	4812201315	Washer	4			
60	4812015630	Shaft nut	4			
61	4812015636	Friction bearing	4			
62	4749900445	Bushing	2			
63	4812202292	Cup spring	16			
64	4749302039	Blind rivet	8			
65	D930290215	Sealant	1			
66	4747400056	Thread locking, 50ml	1			
68	0147132203	Hexagon head screw	6			

Extension unit, l.h. 4812061128 Extension unit, l.h.

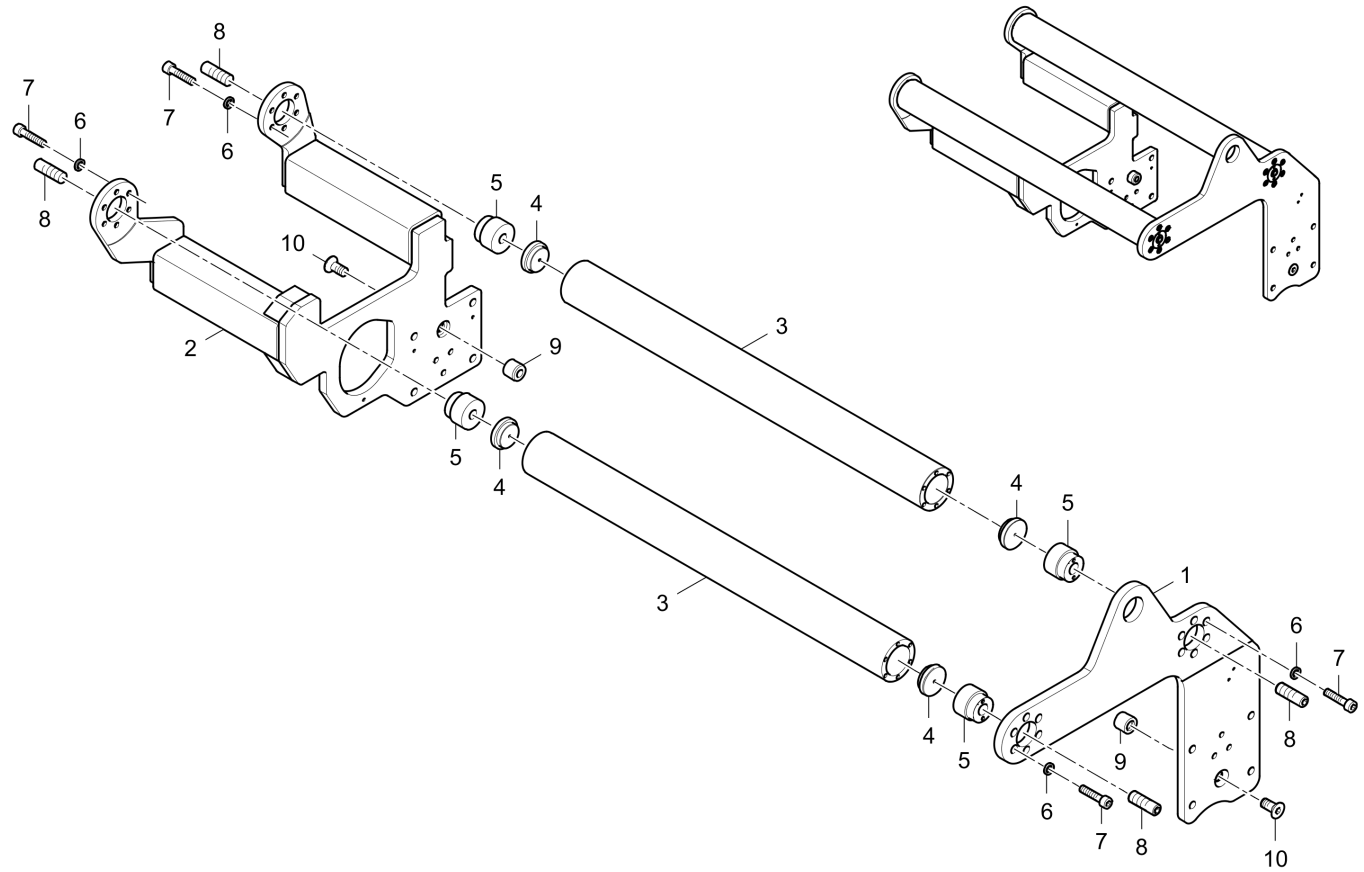

Item	Part No.	Name	Qty	L	C	SN INFO
1	4812061122	Outer shield, l.h.	1			
2	4812061127	Sliding part, l.h.	1			
3	4812024142	Guide tube	2			
4	4812024150	Bottom	4			
5	4812014863	Eccentric head	4			
6	4749901806	Washer	24			
7	0211132603	Hex. sock. screw	24			
8	0190124169	Threaded pin	4			
9	4812011505	Threaded bushing	2			
10	0216110049	Countersunk screw	2			

Extension unit, r.h. 4812061177 Extension unit, r.h.

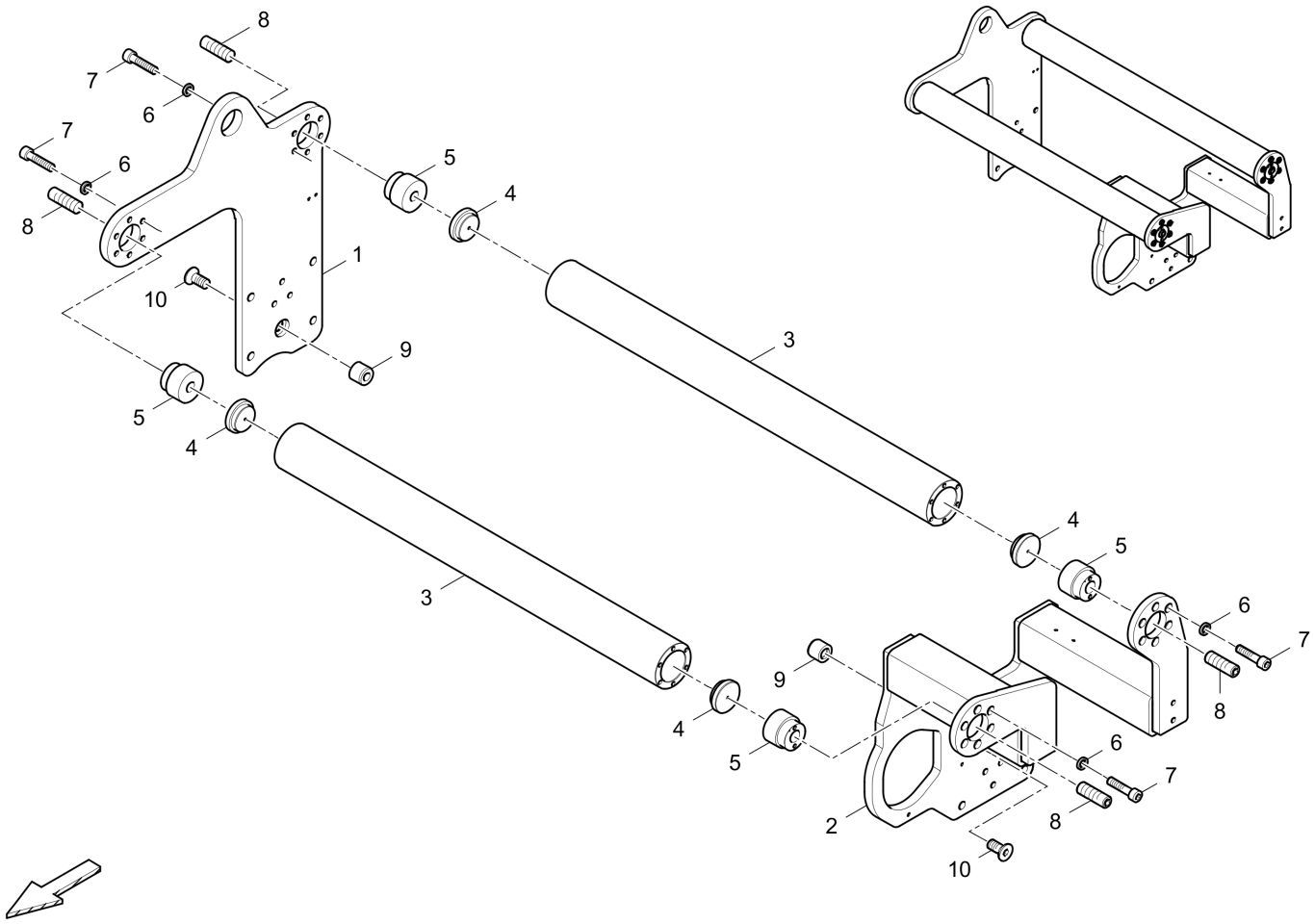

Item	Part No.	Name	Qty	L	C	SN INFO
1	4812061157	Outer shield, r.h.	1			
2	4812061168	Sliding part, r.h.	1			
3	4812024142	Guide tube	2			
4	4812024150	Bottom	4			
5	4812014863	Eccentric head	4			
6	4749901806	Washer	24			
7	0211132603	Hex. sock. screw	24			
8	0190124169	Threaded pin	4			
9	4812011505	Threaded bushing	2			
10	0216110049	Countersunk screw	2			

Hose guide 4812024535 Hose guide

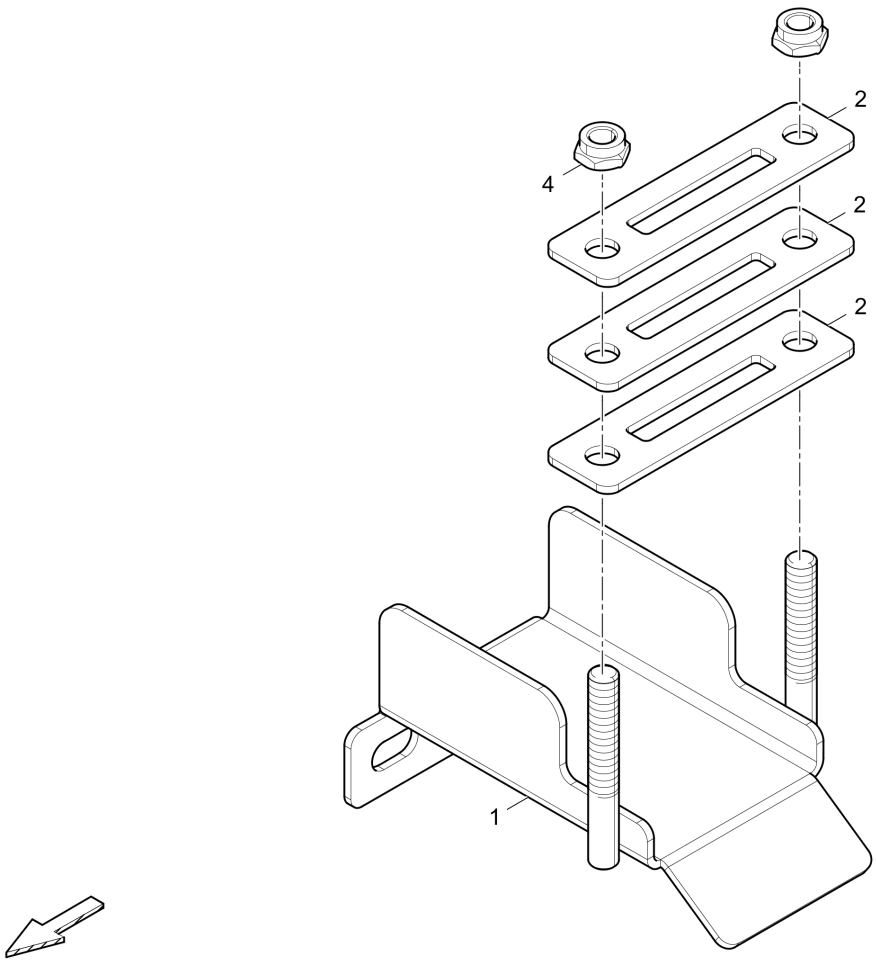

Item	Part No.	Name	Qty	L	C	SN INFO
1	4812024536	Hose guide	1			
2	4812015318	Hose clamp	3			
4	5541396800	Hexagon nut	2			

Scale holder, l.h. 4812061133 Scale holder, l.h.

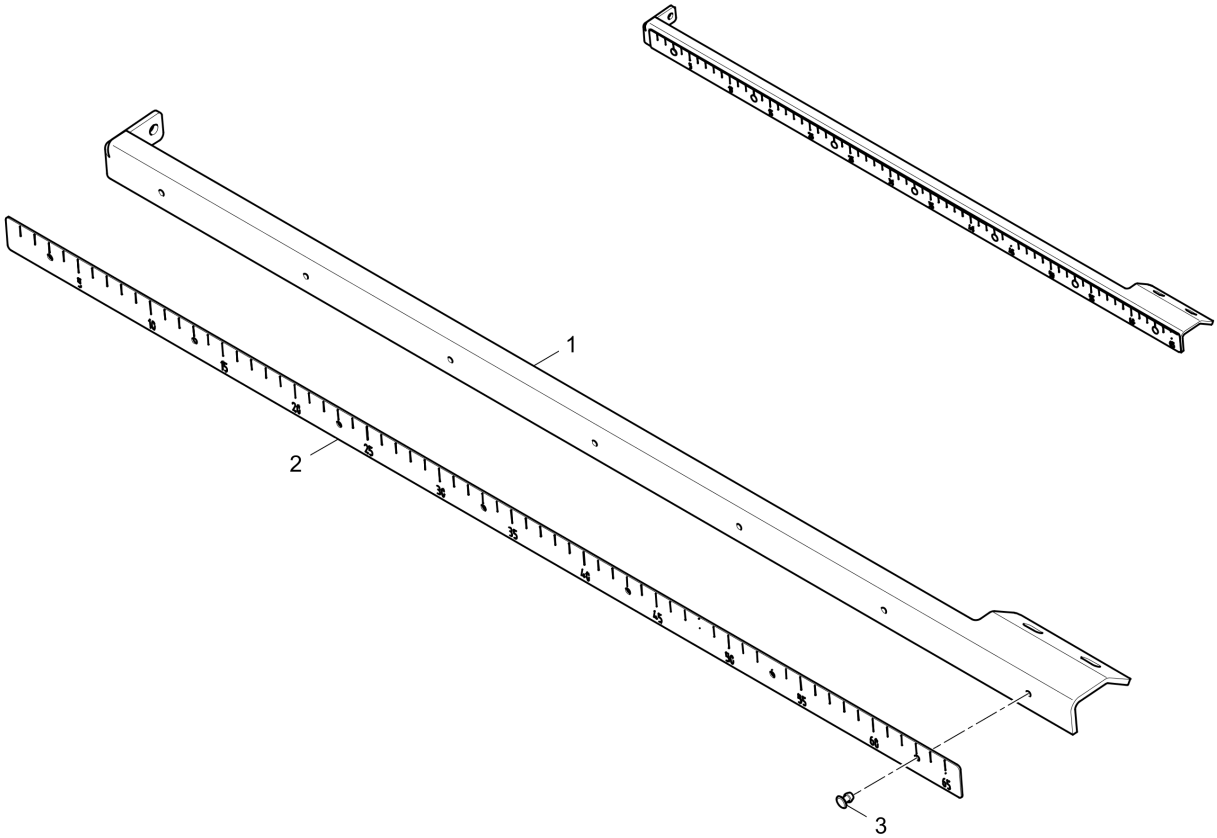

Item	Part No.	Name	Qty	L	C	SN INFO
1	4812061134	Scale holder, l.h.	1			
2	4812061136	Scale, l.h.	1			
3	4749302039	Blind rivet	7			

Scale holder, r.h. 4812061145 Scale holder, r.h.

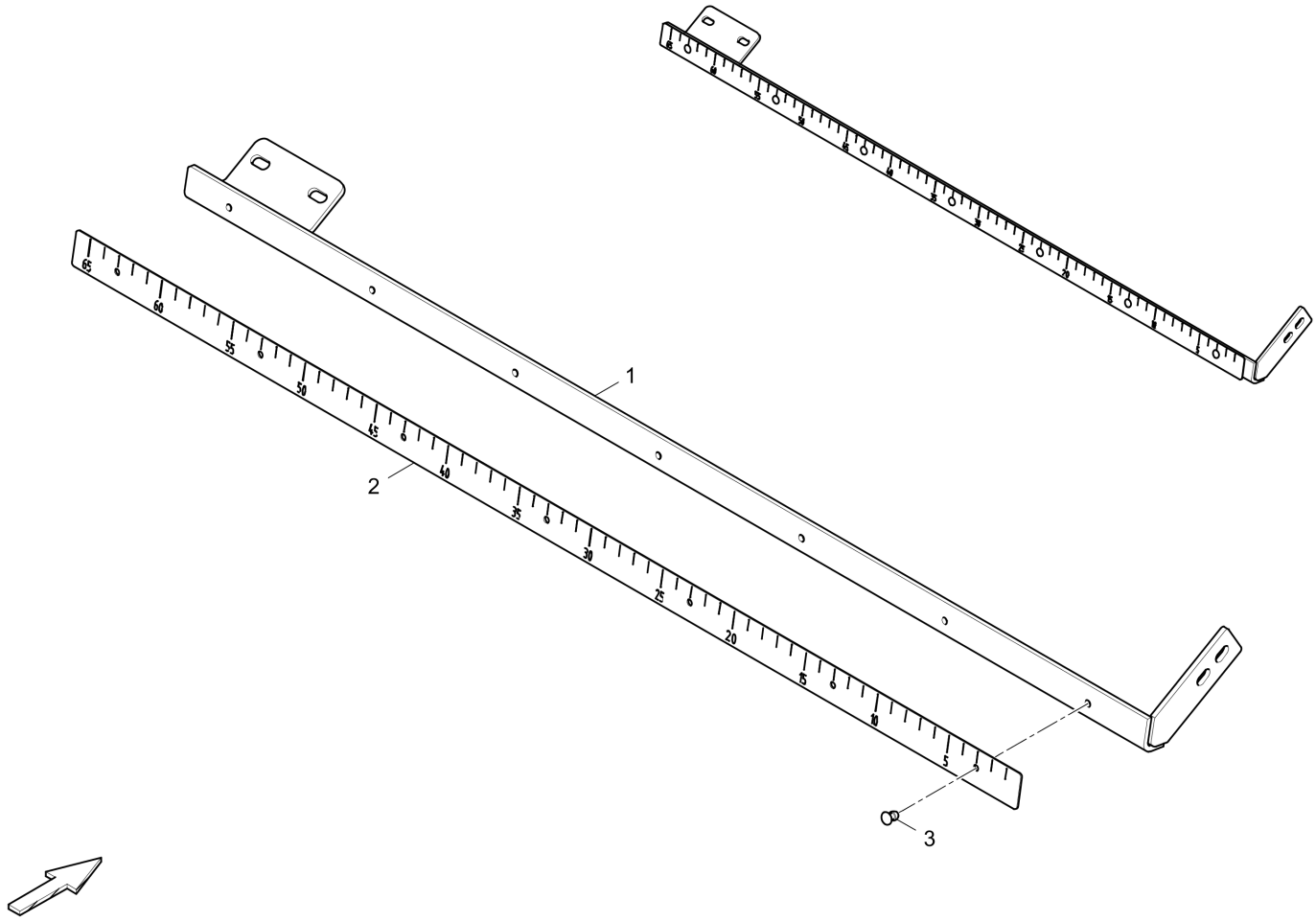

Item	Part No.	Name	Qty	L	C	SN INFO
1	4812061154	Scale holder, r.h.	1			
2	4812061143	Adjuster, r.h.	1			
3	4749302039	Blind rivet	7			

Gas heating, cpl. 4812072940 Gas heating, cpl.

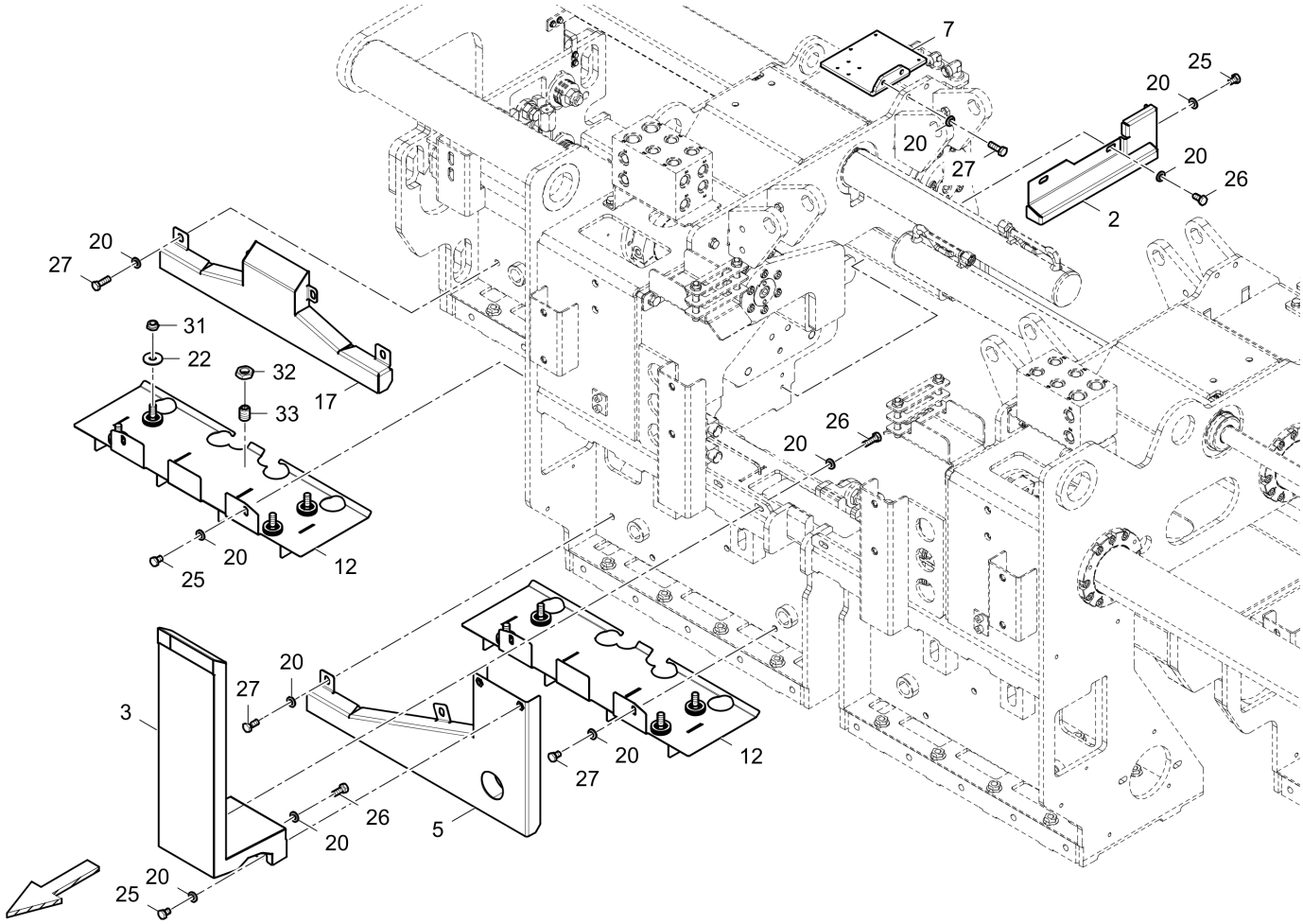

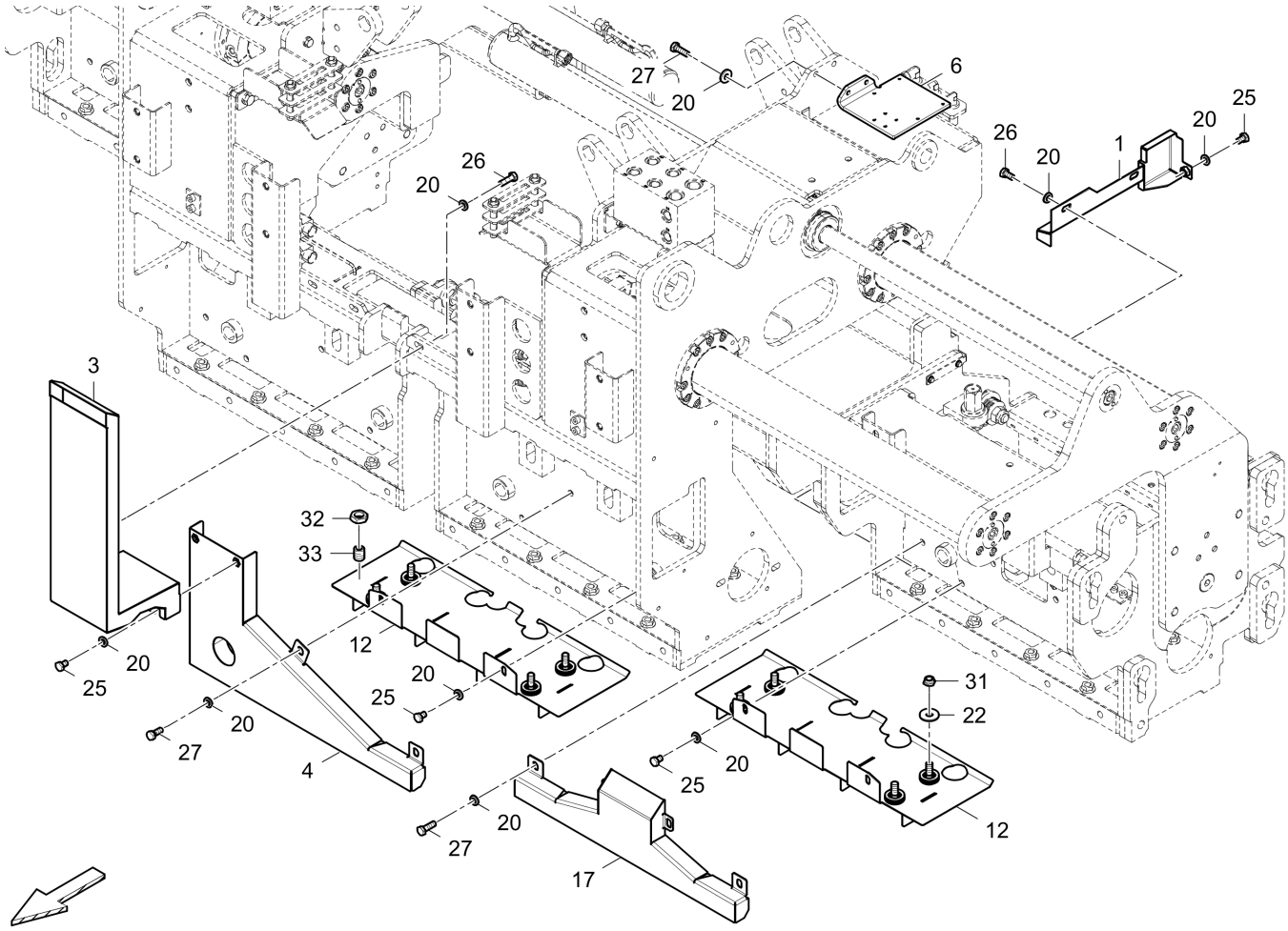
27
20
6
25
20
26
20
1
26
20
3
32
33
12
20
25
20
25
20
27
4
31
22
20
25
12
20
27
17

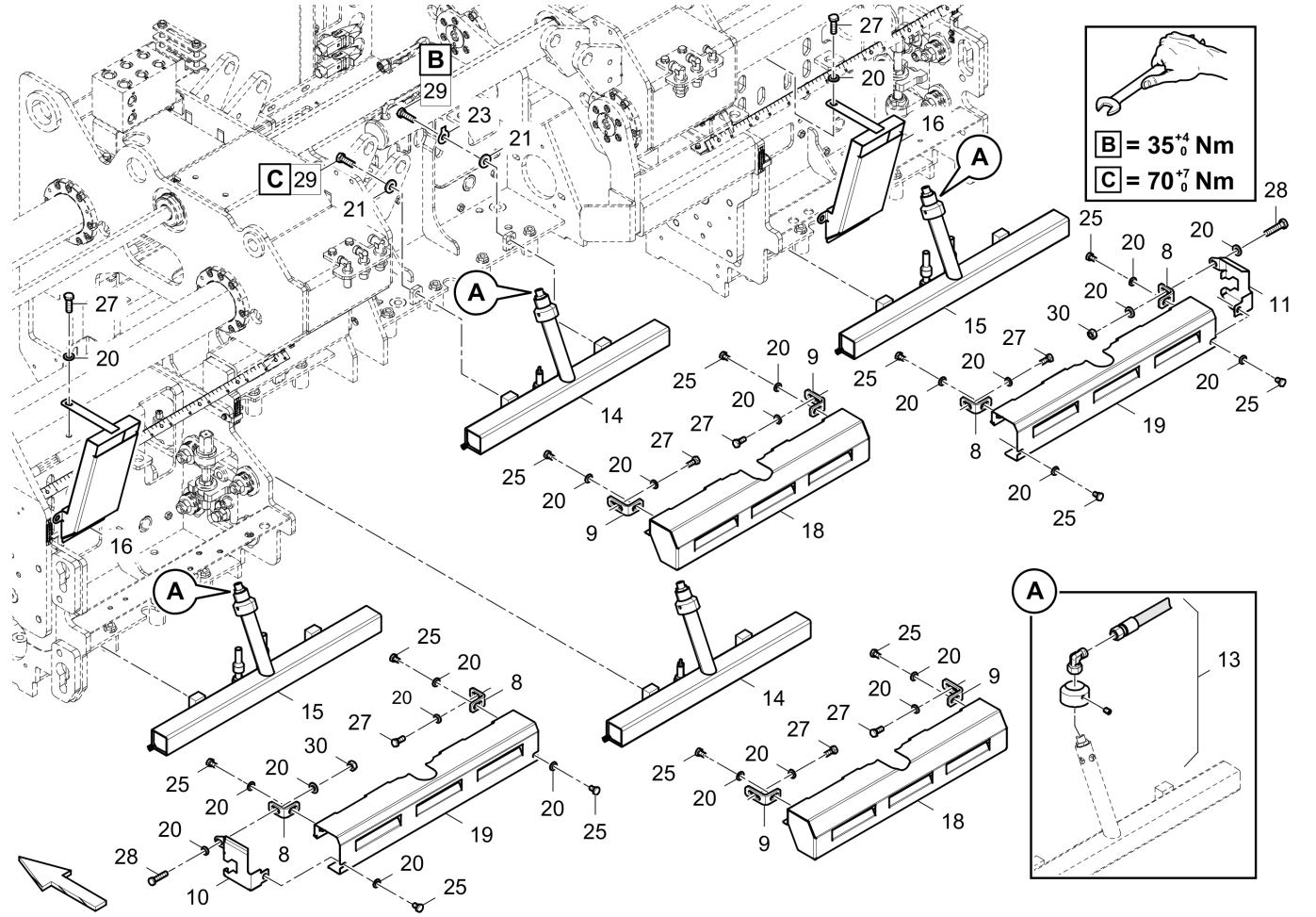

Item	Part No.	Name	Qty	L	C	SN INFO
1	4812014238	Hood extension, l.h.	1			
2	4812014243	Hood extension, r.h.	1			
3	4812075088	Exhaust duct MT, above.	2			
4	4812072748	Exhaust duct MT, below. l.h.	1			
5	4812072751	Exhaust duct MT, below. r.h.	1			
6	4812061984	Adapter plate MT, l.h.	1			
7	4812061985	Adapter plate MT, r.h.	1			
8	4812013947	Fixing angle	4			
9	4812015599	Fixing angle	4			
10	4812014231	Cover extension, l.h.	1			
11	4812014234	Cover extension, r.h.	1			
12	4812072887	Flame baffle	4			
13	4812072595	Gas heating	1			
14	4812014588	Injector burner, MT	2			
14.1	D857652985	Nozzle 0,5mm	1			
15	4812014592	Injector burner, VT	2			
15.1	4812074481	Nozzle 0,53mm	1			

Item	Part No.	Name	Qty	L	C	SN INFO
16	4812061976	Air duct VT, rear.	2			
17	4812061963	Air duct VT	2			
18	4812014586	Protective strip MT	2			
19	4812014591	Protective strip VT	2			
20	0333310050	Lock washer	68			
21	D939130012	Washer	8			
22	0301234400	Plain washer	16			
23	D936780009	Washer	4			
25	0147132003	Hex. head screw	16			
26	0147132203	Hexagon head screw	12			
27	0147132303	Hexagon bolt	36			
28	0147132712	Screw DIN933	2			
29	0147136303	Screw	8			
30	0266211000	Hexagon nut	2			
31	5541396800	Hexagon nut	16			
32	0261211400	Hexagon nut	8			
33	D937948757	Threaded pin	8			

Gas heating 4812072595 Gas heating

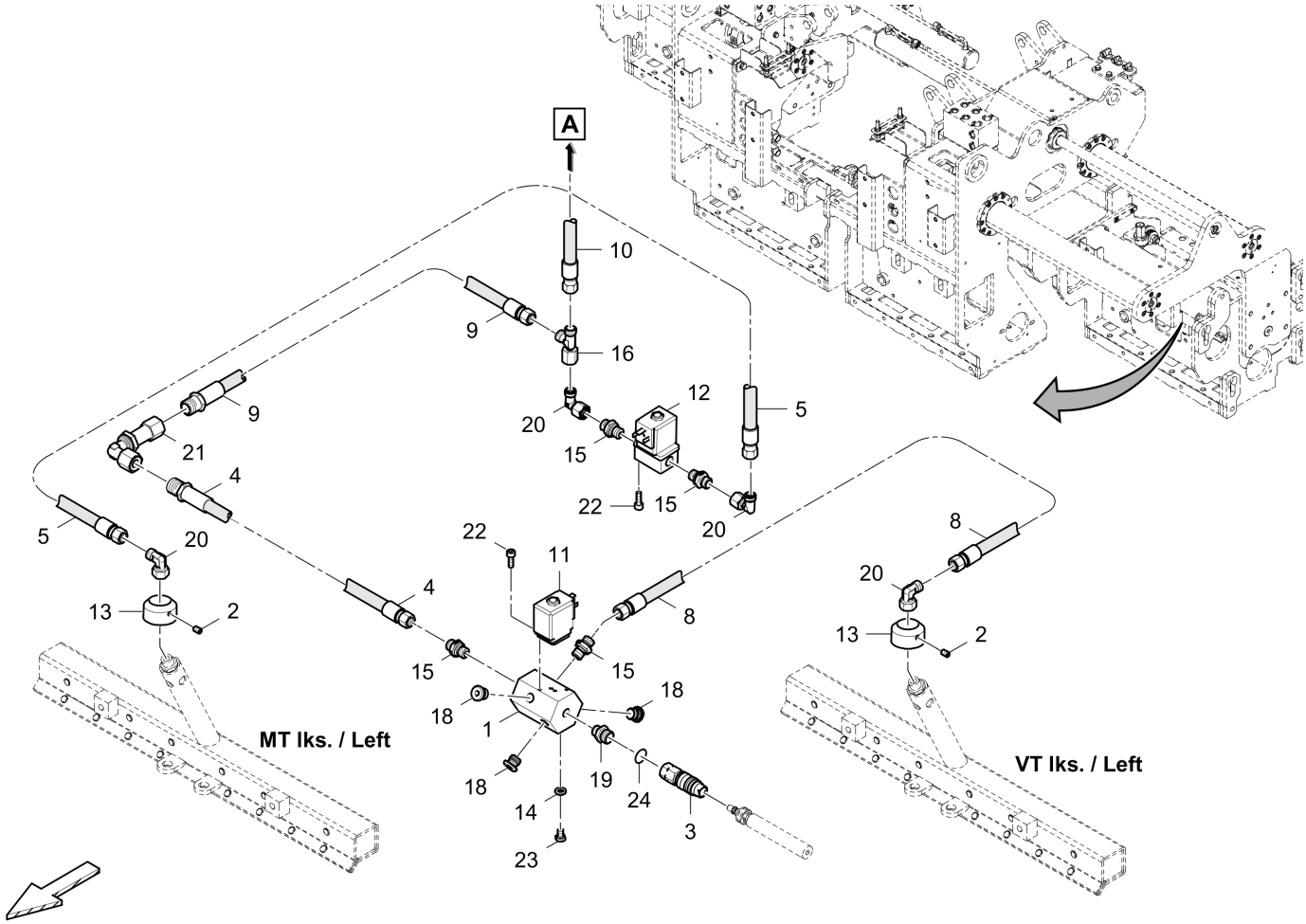

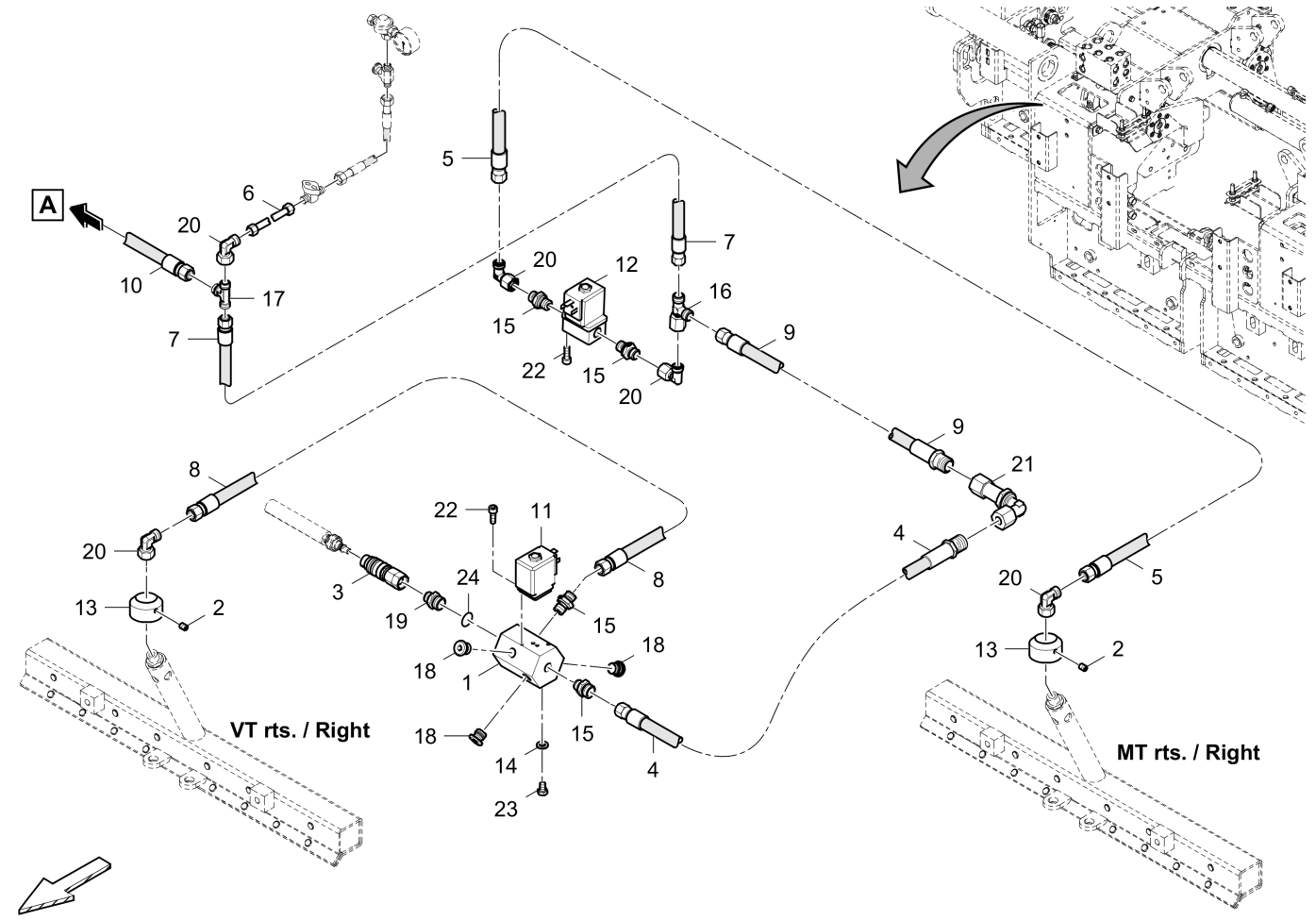

Item	Part No.	Name	Qty	L	C	SN INFO
1	4812017820	Gas distributor block	2			
2	D937954487	Threaded pin	8			
3	4812011320	Coupling	2			
4	D930657560	Gas hose	2			
5	4812072661	Gas hose	2			
6	4749240737	Gas hose	1			
7	4749240540	Gas hose	1			
8	4700665977	Gas hose	2			
9	4812072659	Gas hose	2			
10	4749240740	Hose	1			
11	D963365025	Solenoid valve	2			
12	4749100822	Solenoid valve	2			
13	4730011597	Primary air throttle	4			
14	0333310050	Lock washer	4			
15	D961935106	Male connector	8			
16	D961919006	Stud	2			
17	D961905006	Union tee	1			

Item	Part No.	Name	Qty	L	C	SN INFO
18	D961175106	Plug screw	6			
19	4730010811	Screwing	2			
20	D961917006	Elbow socket	9			
21	D961907006	Elbow socket	2			
22	0211117103	Hexagon socket head cap screw	8			
23	0147132003	Hex. head screw	4			
24	4749901097	Seal ring	2			

Profile adjustment 4812060915 Profile adjustment

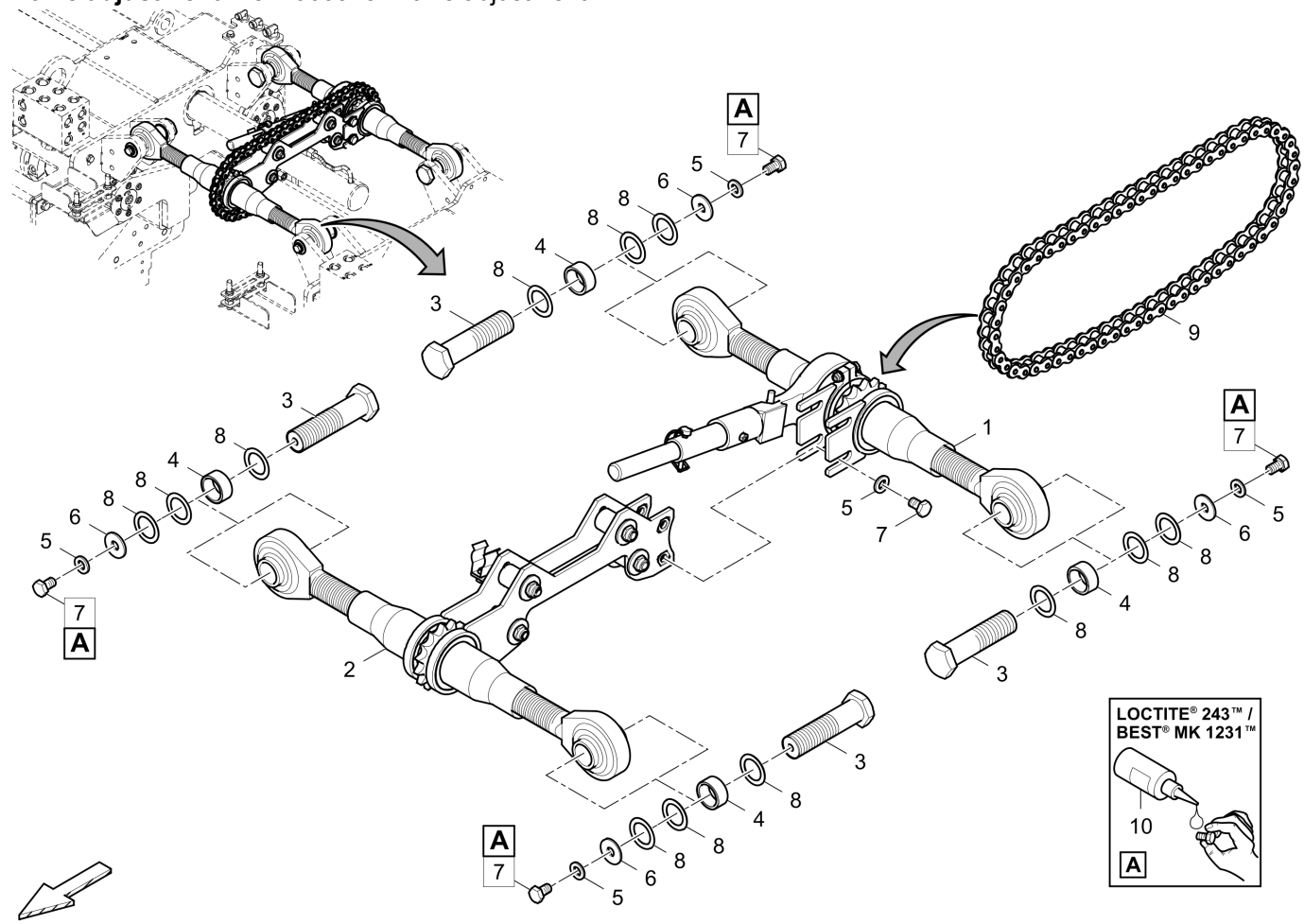

Item	Part No.	Name	Qty	L	C	SN INFO
1	4812060916	Top con rod, rear.	1			
2	4812060917	Top con rod, front.	1			
3	4812012381	Bolt	4			
4	4812015794	Spacer bush	4			
5	0333310051	Lock washer	4			
6	0300013038	Flat washer	4			
7	0147135903	Hexagon bolt	8			
8	0324155174	Adjusting washer	12			
9	4812015210	Roller chain	1			
10	D930290215	Sealant	1			

Top con rod, rear. 4812060916 Top con rod, rear.

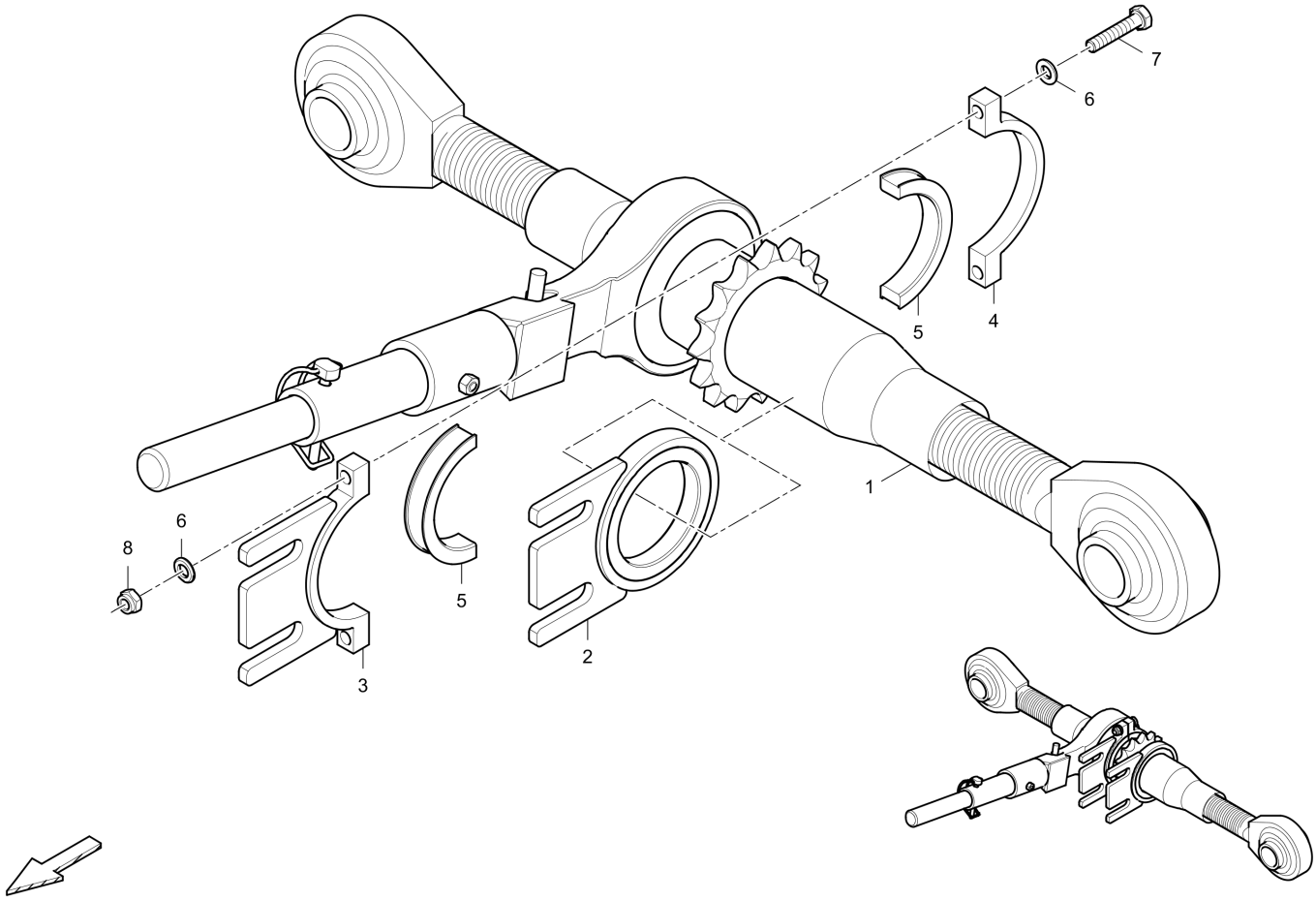

Item	Part No.	Name	Qty	L	C	SN INFO
1	4812216810	Top con rod, rear.	1			
2	4812060918	Track adjuster	1			
3	4812018230	Track adjuster	1			
4	4812015872	Bearing shell	1			
5	4812201950	Friction bearing	2			
6	0301232100	Plain washer	4			
7	0147125003	Hex head screw	2			
8	0291118507	Nut	2			

Top con rod, rear. 4812216810 Top con rod, rear.

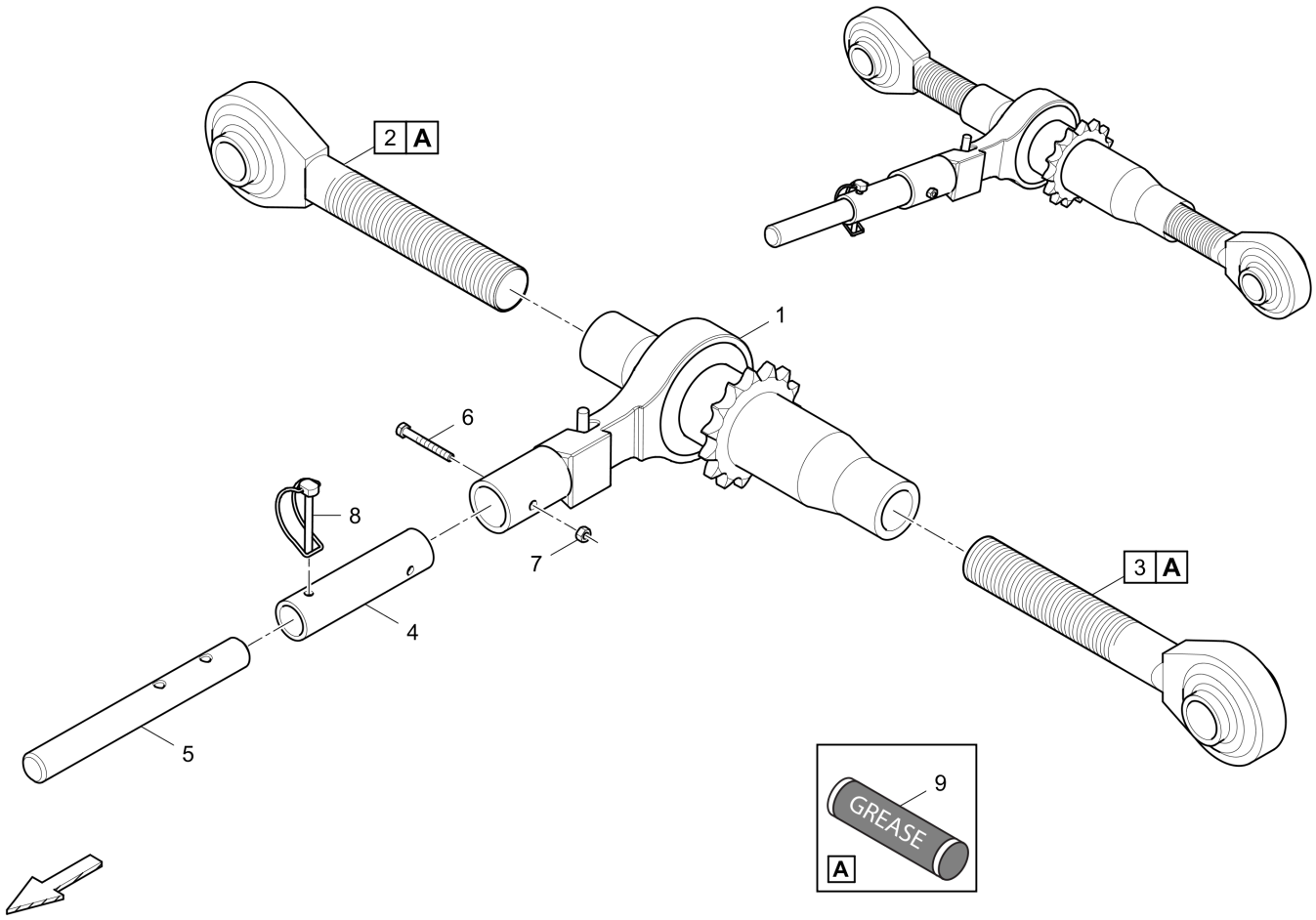

Item	Part No.	Name	Qty	L	C	SN INFO
1	4812216811	Top con rod, rear.	1			
2	4812216808	Spindle, r.h.	1			
3	4812216809	Spindle, l.h.	1			
4	4812015736	Extension	1			
5	4812015827	Extension	1			
6	4700500010	Screw	1			
7	0266210700	Nut	1			
8	D930290106	Linch pin	1			
9	4812161897	Paver Grease - 1 cartridge	1			

Track adjuster 4812060918 Track adjuster

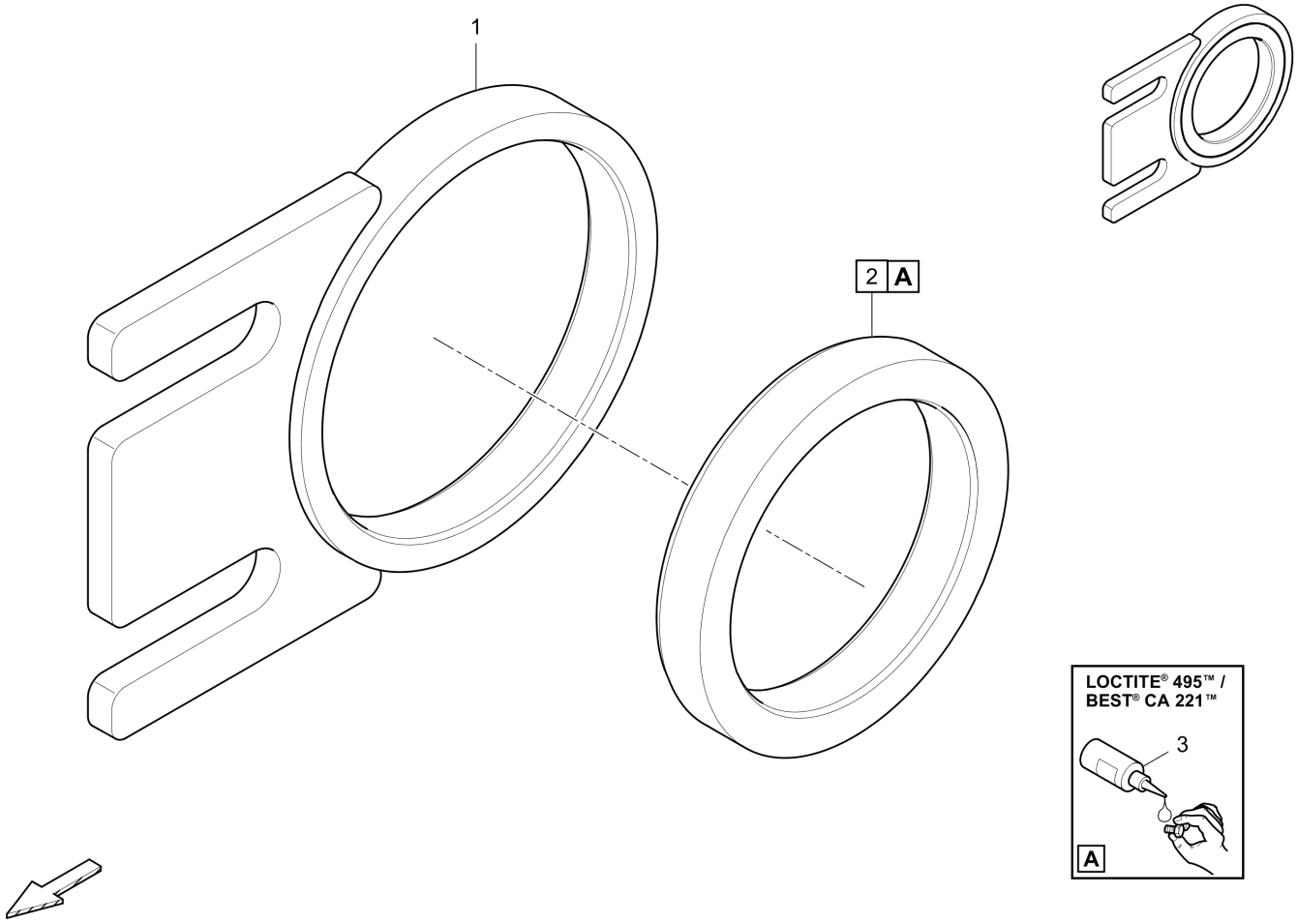

Item	Part No.	Name	Qty	L	C	SN INFO
1	4812018229	Track adjuster	1			
2	4812201948	Bushing	1			
3	4812045225	Adhesive	1			

Top con rod, front. 4812060917 Top con rod, front.

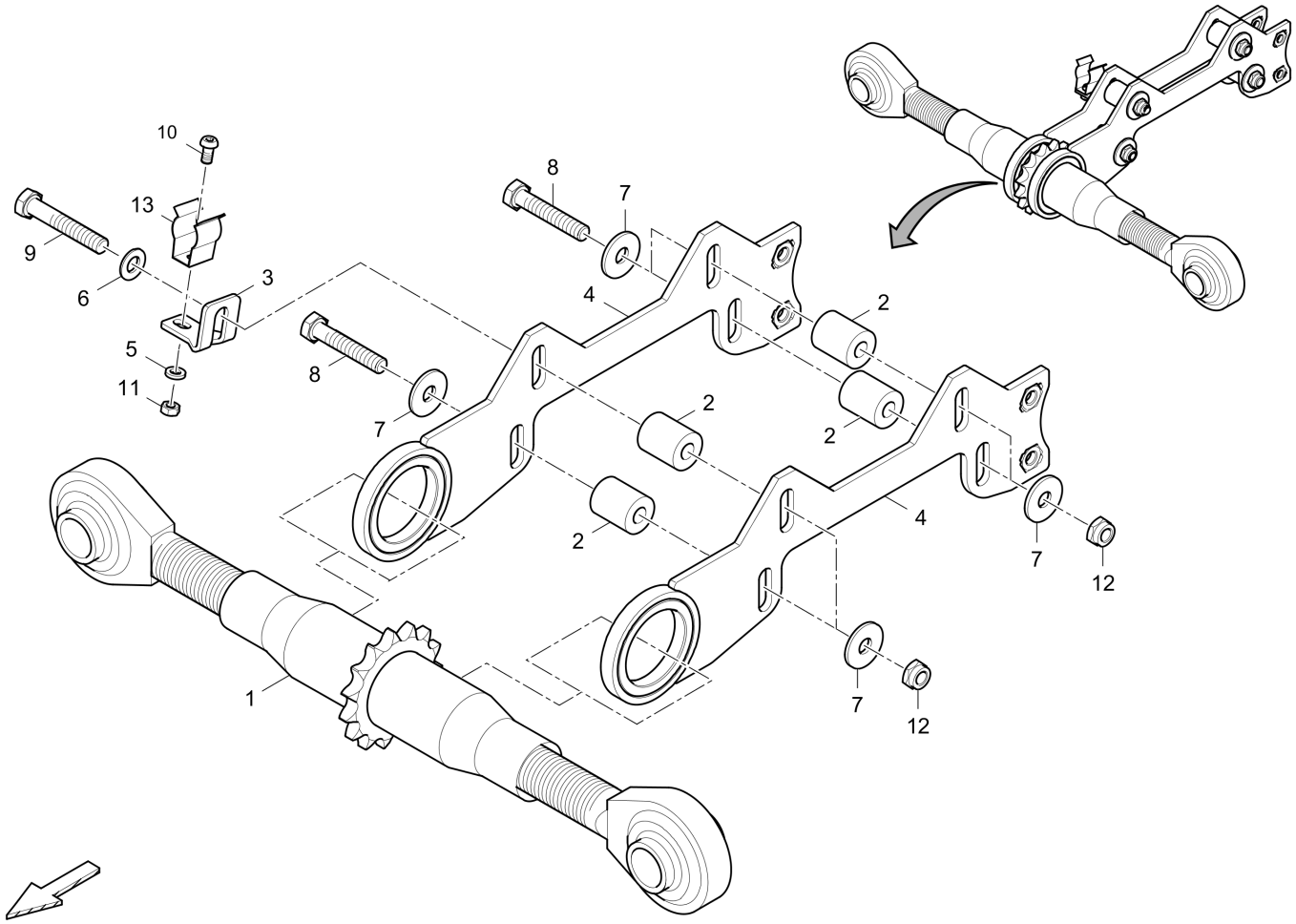

Item	Part No.	Name	Qty	L	C	SN INFO
1	4812216804	Top con rod, front.	1			
2	4812018259	Friction bearing	4			
3	4812018324	Holder plate	1			
4	4812060920	Track adjuster	2			
5	0333310055	Washer	1			
6	0302127405	Washer	1			
7	0300013038	Flat washer	7			
8	0147136803	Hexagon bolt	3			
9	0147136912	Hex. head screw M10x60mm, (2.36".)	1			
10	0215000621	Flat headed screw	1			
11	5730015118	Hexagon nut	1			
12	5541396800	Hexagon nut	4			
13	4812009597	Clasp	1			

Top con rod, front. 4812216804 Top con rod, front.

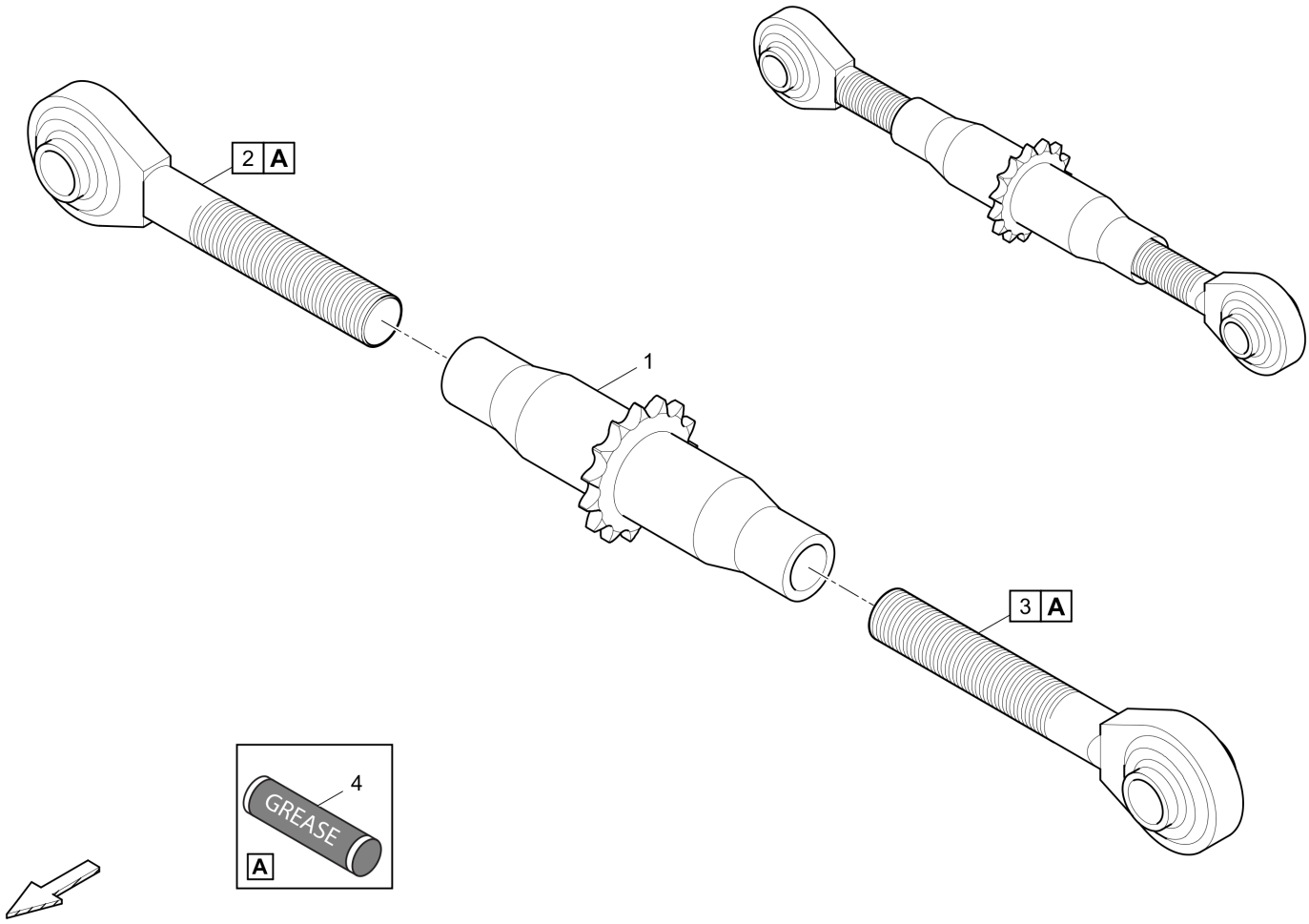

Item	Part No.	Name	Qty	L	C	SN INFO
1	4812216805	Top con rod	1			
2	4812216808	Spindle, r.h.	1			
3	4812216809	Spindle, l.h.	1			
4	4812161897	Paver Grease - 1 cartridge	1			

Track adjuster 4812060920 Track adjuster

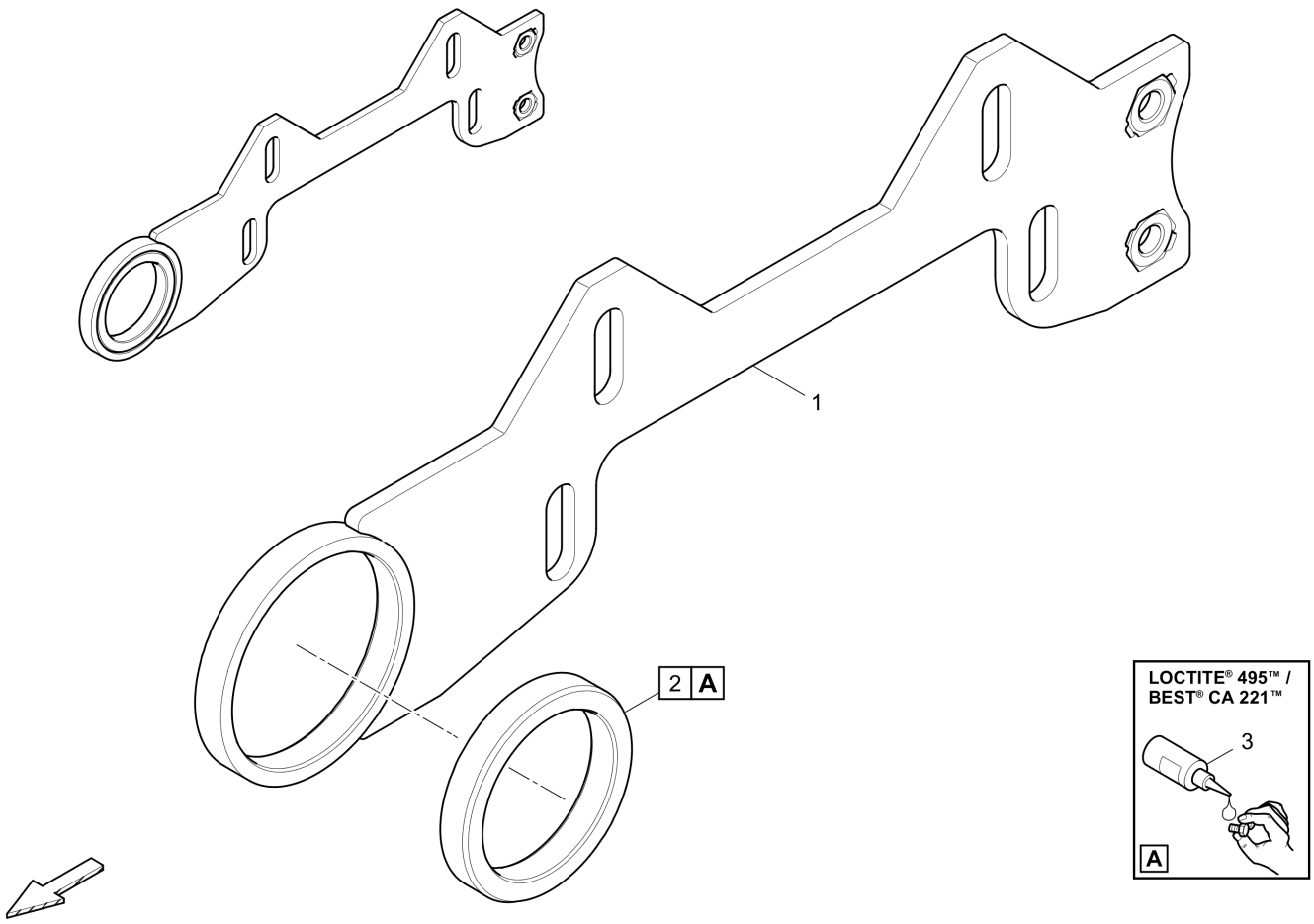

Item	Part No.	Name	Qty	L	C	SN INFO
1	4812018358	Track adjuster	1			
2	4812201948	Bushing	1			
3	4812045225	Adhesive	1			

Protection and trim plates 4812061255 Protection and trim plates

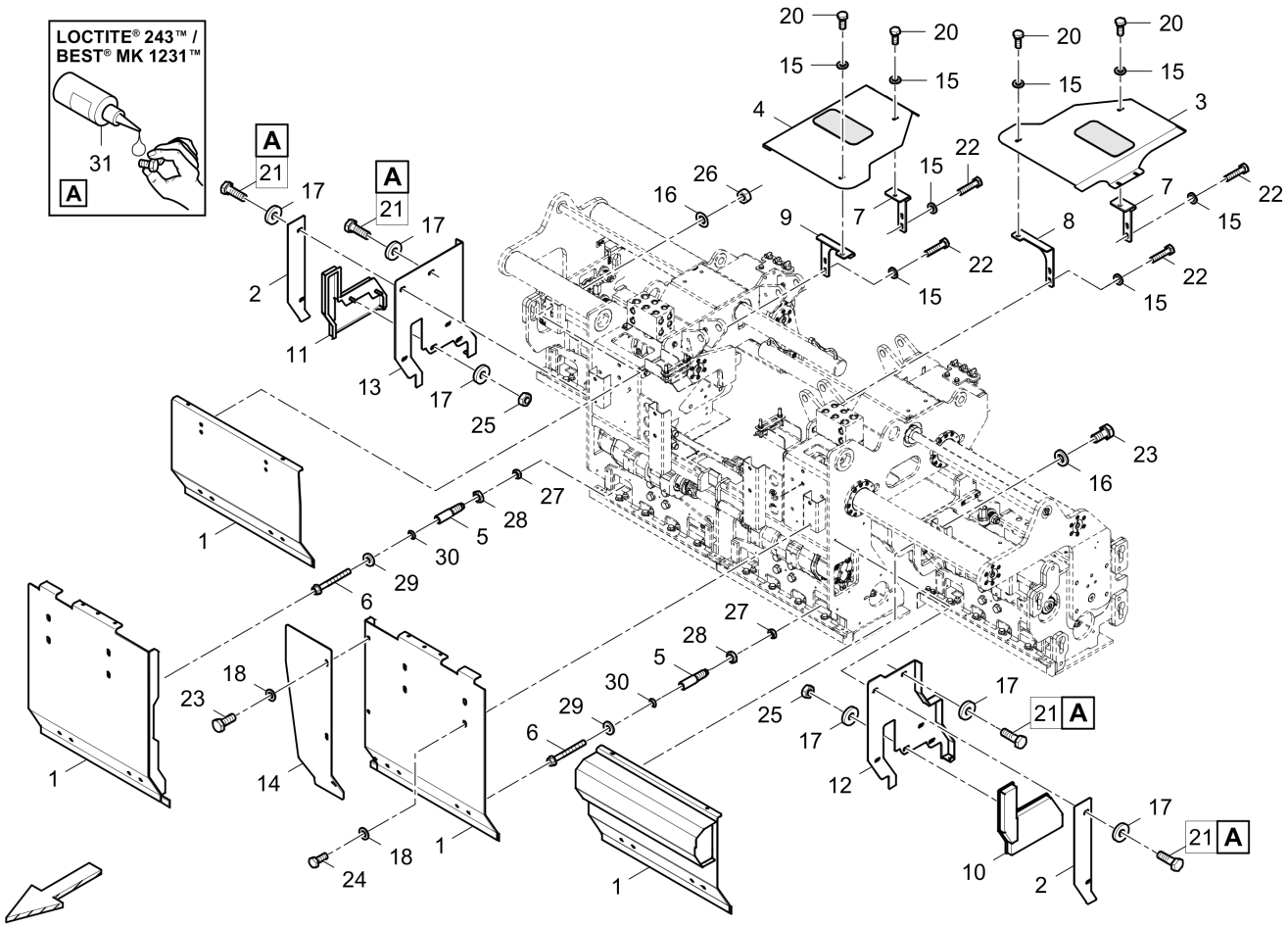

Item	Part No.	Name	Qty	L	C	SN INFO
1	4812061266	Kit, tamper guide plates	1			
2	4812061234	Cover plate	2			
3	4812061280	Hood, l.h.	1			
4	4812061283	Hood, r.h.	1			
5	4812200922	Adjusting screw	8			
6	4812014416	Threaded pin	8			
7	4812061285	Retainer	2			
8	4812061009	Retainer, l.h.	1			
9	4812061012	Retainer, r.h.	1			
10	4812017945	Side cover, l.h.	1			
11	4812017944	Side cover, r.h.	1			
12	4812066012	Sealing, l.h.	1			
13	4812066065	Sealing, r.h.	1			
14	4812071822	Overlap plate	1			
15	0333310050	Lock washer	16			
16	0333310051	Lock washer	8			

Item	Part No.	Name	Qty	L	C	SN INFO
17	D939130010	Washer	12			
18	D939130012	Washer	11			
20	0147132303	Hexagon bolt	8			
21	0147132503	Hexagon bolt	8			
22	0147132712	Screw DIN933	8			
23	0147136003	Screw cap	5			
24	0147136203	Screw	10			
25	0266211000	Hexagon nut	4			
26	0266211100	Nut hexagon	4			
27	0261211400	Hexagon nut	8			
28	0261109941	Hexagon nut	8			
29	D930284510	Conical washer	8			
30	D930298317	Washer	8			
31	D930290215	Sealant	1			

Referenced Pages

4812061266 Kit, tamper guide 7

Hood, l.h. 4812061280 Hood, l.h.

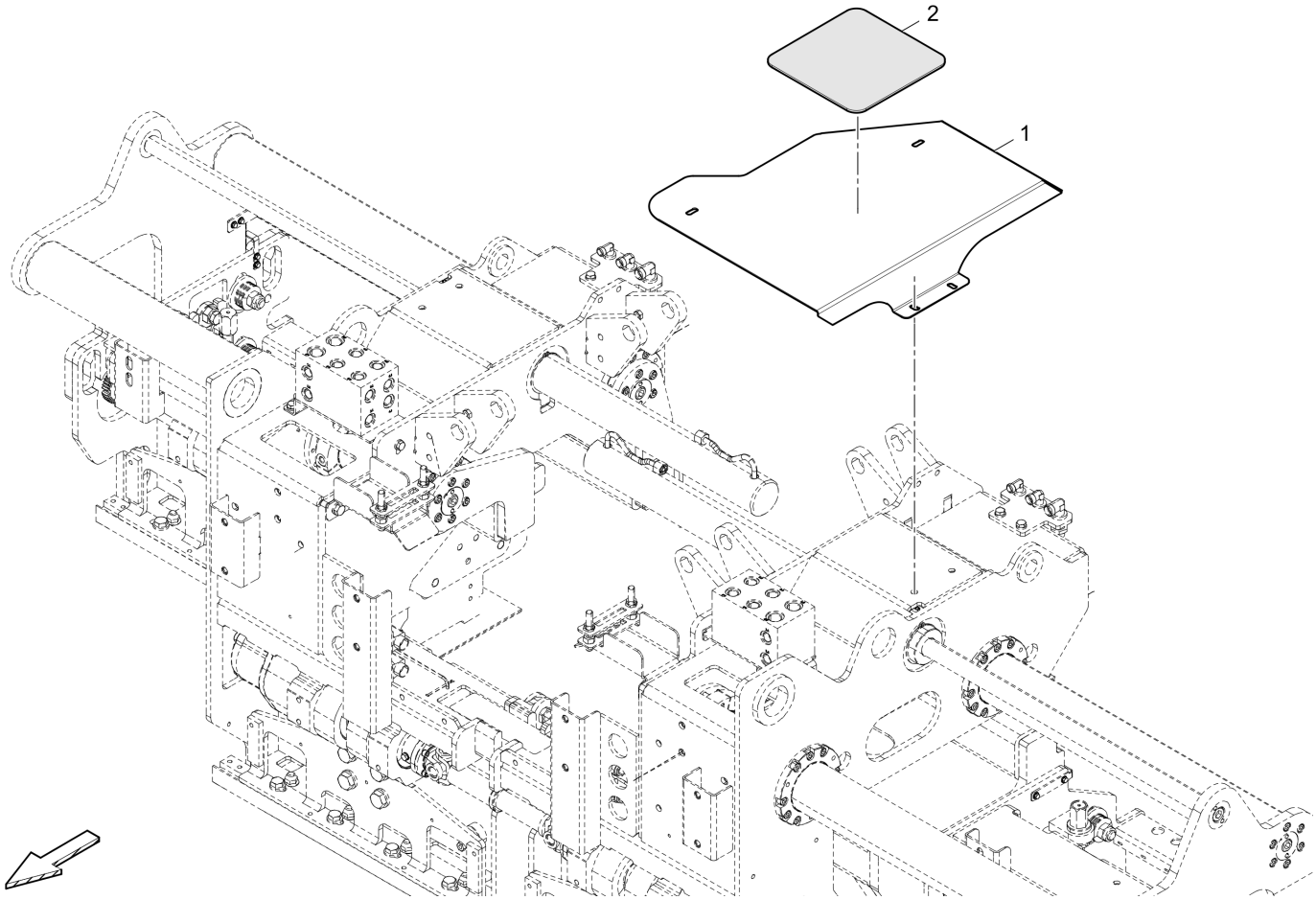

Item	Part No.	Name	Qty	L	C	SN INFO
1	4812061281	Cover, l.h.	1			
2	4812063283	Rubber plate	1			

Hood, r.h. 4812061283 Hood, r.h.

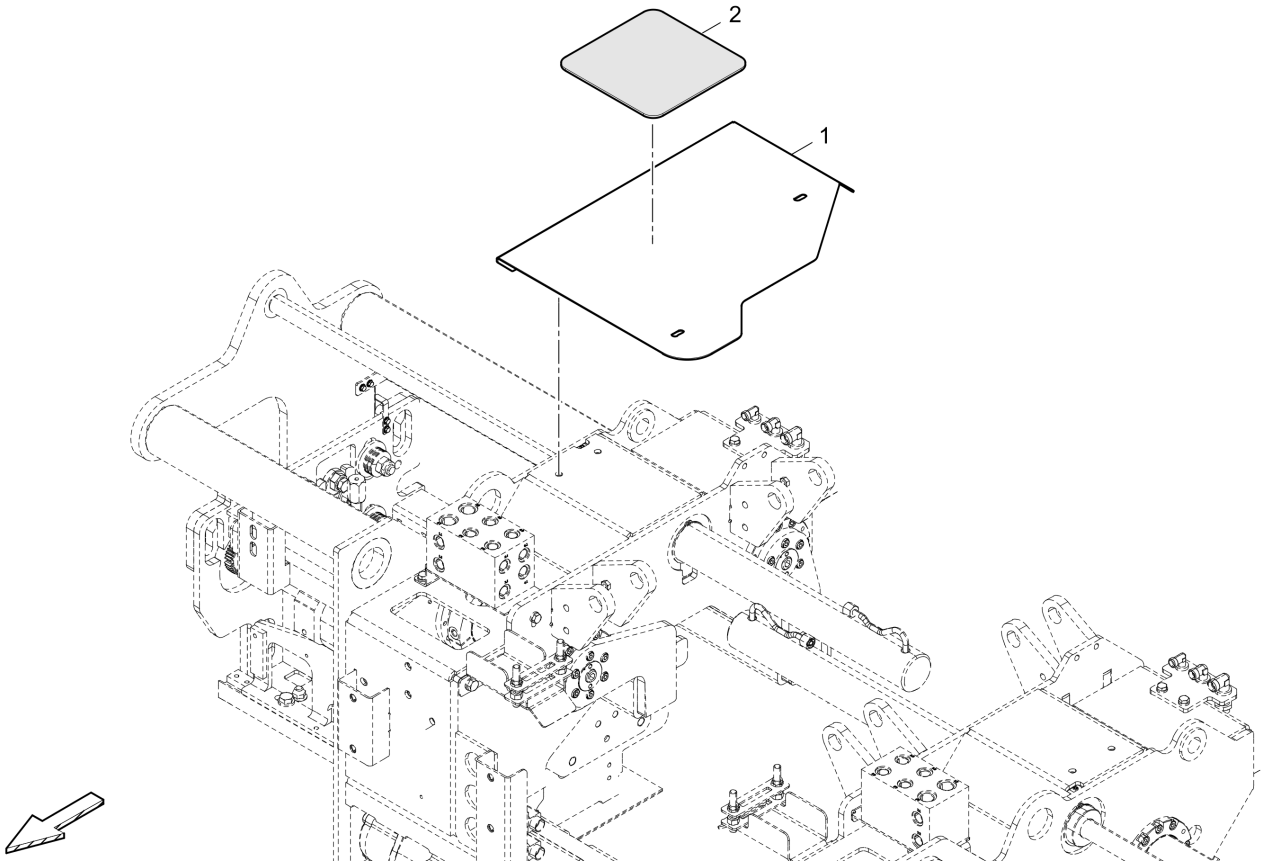

Item	Part No.	Name	Qty	L	C	SN INFO
1	4812061284	Cover, r.h.	1			
2	4812063283	Rubber plate	1			

Operation width, 3.00m 4812061878 Operation width, 3.00m

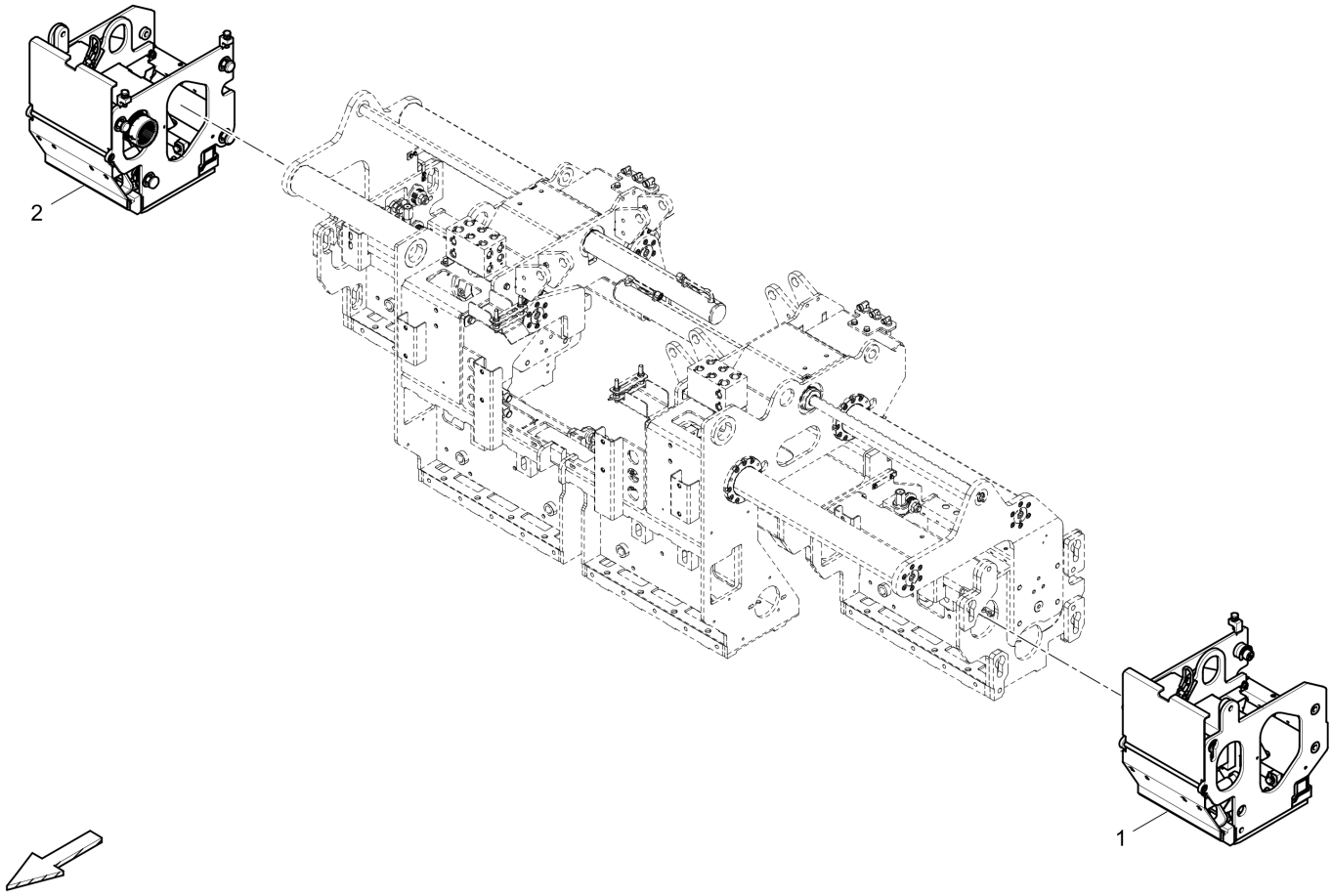

Item	Part No.	Name	Qty	L	C	SN INFO
1	4812061879	Extension mount, AT300 l.h.	1			
2	4812061880	Extension mount, AT300 r.h.	1			

Extension mount, AT300 l.h. 4812061879 Extension mount, AT300 l.h.

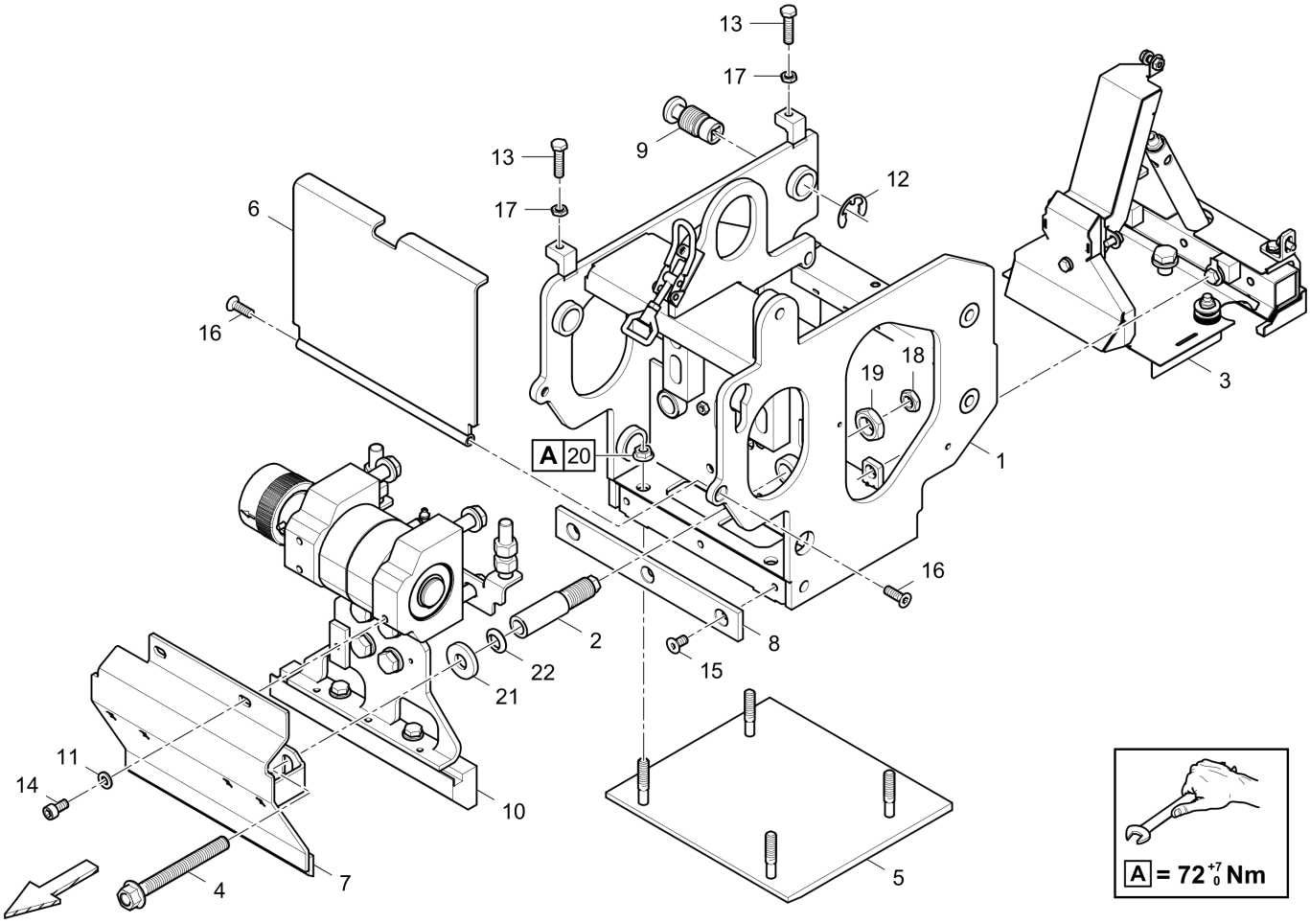

Item	Part No.	Name	Qty	L	C	SN INFO
1	4812061700	Extension mount, l.h.	1			
2	4812200922	Adjusting screw	2			
3	4812237476	Gas heating, AT300 l.h.	1			
4	4812014416	Threaded pin	2			
5	4812236794	Screed plate	1			
6	4812023490	Guard plate	1			
7	4812061723	Guard plate, below, l.h.	1			
8	4812012854	Wear plate	1			
9	4812014188	Draw spindle	4			
10	4812239660	Tamper drive, l.h.	1			
11	0333310051	Lock washer	2			
12	0335311300	Lock washer	4			
13	0147196264	Bolt	2			
14	0211136003	Hexagon socket head cap	2			
15	0216110056	Countersunk screw	3			
16	0216110016	Countersunk screw	2			

Item	Part No.	Name	Qty	L	C	SN INFO
17	0261211100	Hex.nut-M10	2			
18	0261211400	Hexagon nut	2			
19	0261109941	Hexagon nut	2			
20	0261109156	Tensilock nut	4			
21	D930284510	Conical washer	2			
22	D930298317	Washer	2			

Gas heating, AT300 l.h. 4812237476 Gas heating, AT300 l.h.

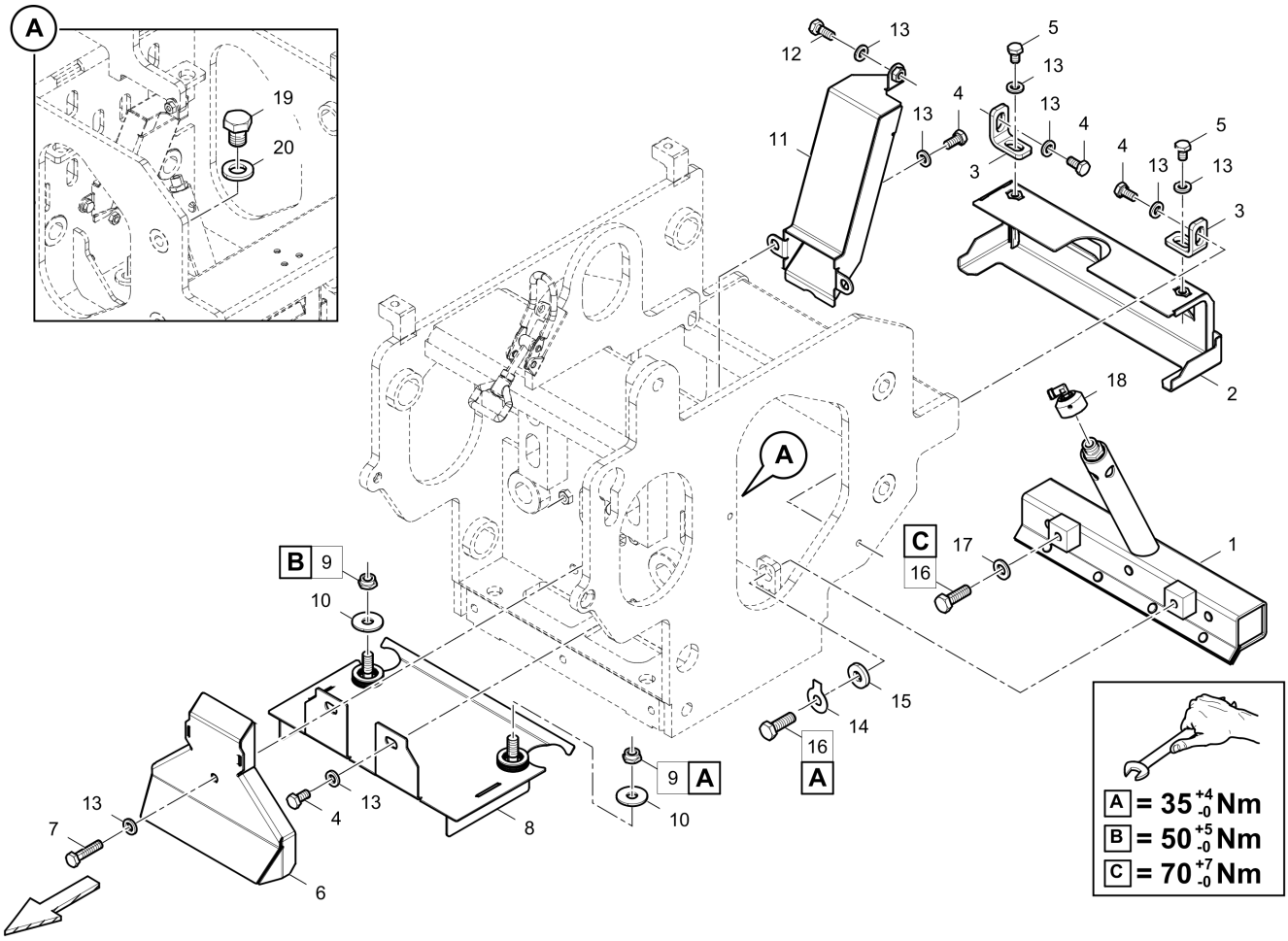

Item	Part No.	Name	Qty	L	C	SN INFO
1	4812013083	Injector burner	1			
2	4812014428	Protective strip	1			
3	4812013947	Fixing angle	2			
4	0147132203	Hexagon head screw	6			
5	0147132003	Hex. head screw	2			
6	4812012924	Air duct	1			
7	0147132703	Hexagon bolt	1			
8	4812013042	Flame baffle	1			
9	5541396800	Hexagon nut	2			
10	0300013038	Flat washer	2			
11	4812237471	Air duct	1			
12	0147132303	Hexagon bolt	1			
13	0333310050	Lock washer	10			
14	D936780009	Washer	1			
15	D939130012	Washer	1			
16	0147136303	Screw	2			

Item	Part No.	Name	Qty	L	C	SN INFO
17	0333310051	Lock washer	1			
18	4812072600	Gas feeder arr. AT300.	1			
19	0147147203	Hexagon head screw	2			
20	0333310049	Lock washer	2			

Gas feeder arr. AT300. 4812072600 Gas feeder arr. AT300.

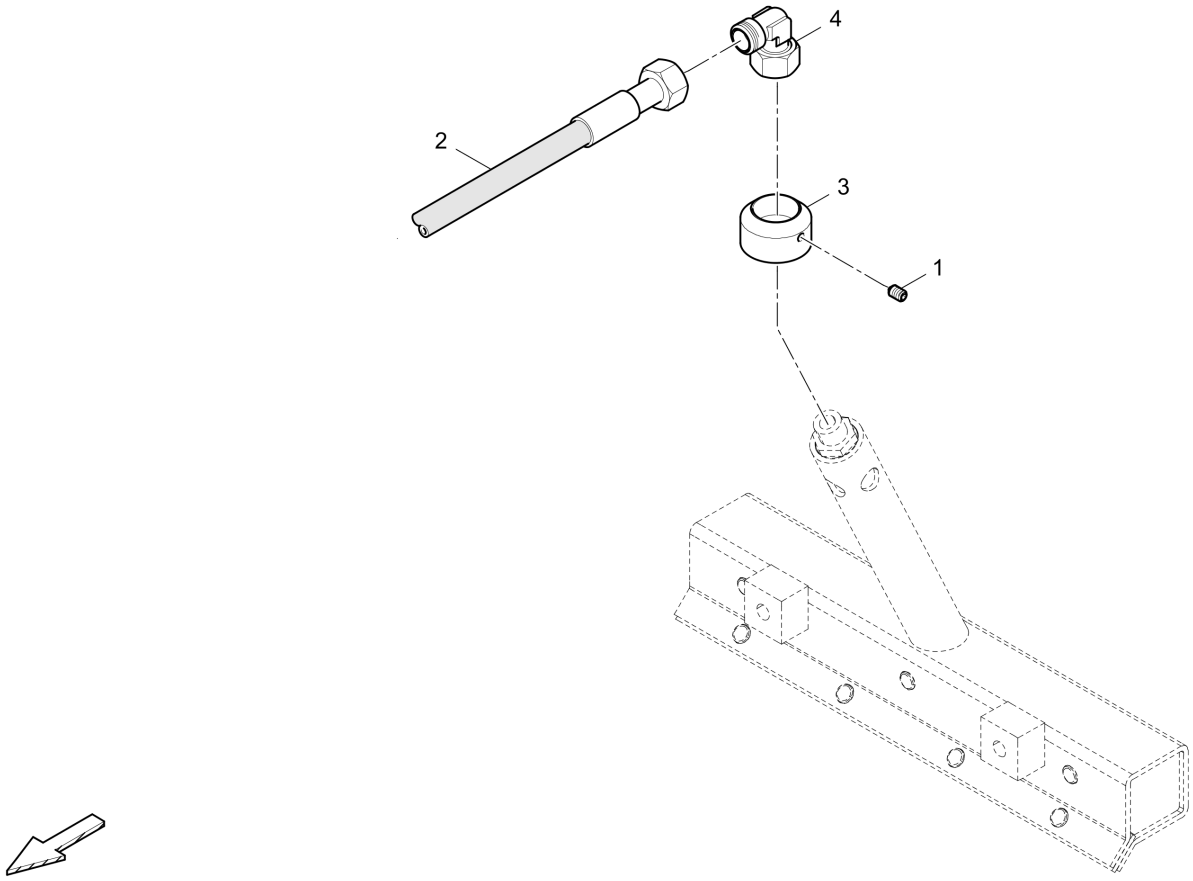

Item	Part No.	Name	Qty	L	C	SN INFO
1	D937954487	Threaded pin	2			
2	D930657824	Hose	1			
3	4730011597	Primary air throttle	1			
4	D961917006	Elbow socket	1			

Tamper drive, l.h. 4812239660 Tamper drive, l.h.

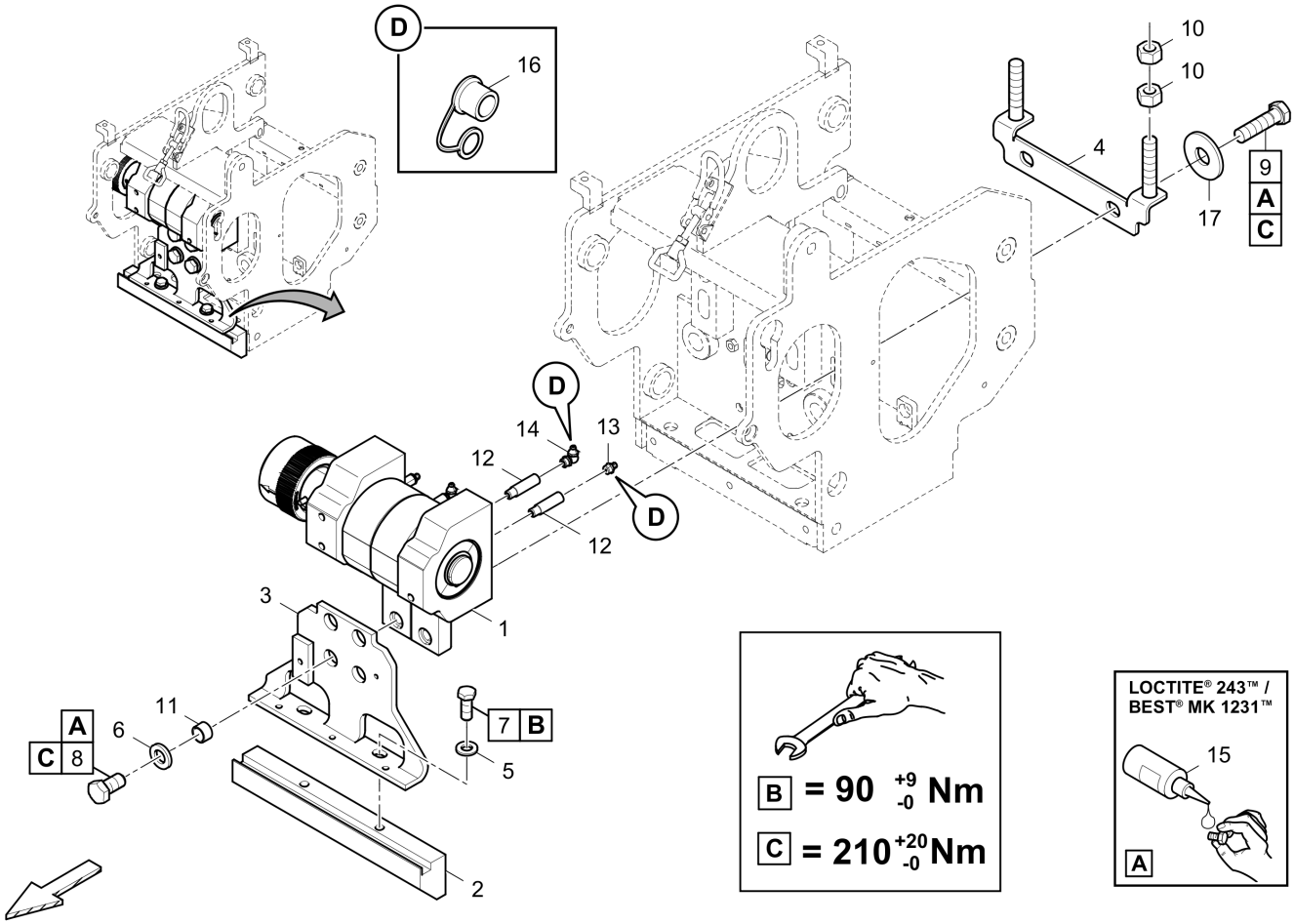

Item	Part No.	Name	Qty	L	C	SN INFO
1	4812239662	Tamper, l.h.	1			
2	4812012695	Tamper bar	1			
3	4812012691	Tamper frame	1			
4	4812012709	Brace	1			
5	0333310052	Flat washer	2			
6	0333310049	Lock washer	4			
7	0147140103	Screw	2			
8	0147147503	Hex bolt	4			
9	0147148203	Hex. head screw M16 x 65	4			
10	0266211400	Hexagon nut M16	4			
11	4749302339	Bushing	4			
12	4812073787	Adapter	4			
13	D935511210	Grease nipple	2			
14	D935513220	Grease nipple	2			
15	D930290215	Sealant	1			
16	4812011219	Protection cap	4			

Item	Part No.	Name	Qty	L	C	SN INFO
17	4749900538	Washer	4			

Tamper, l.h. 4812239662 Tamper, l.h.

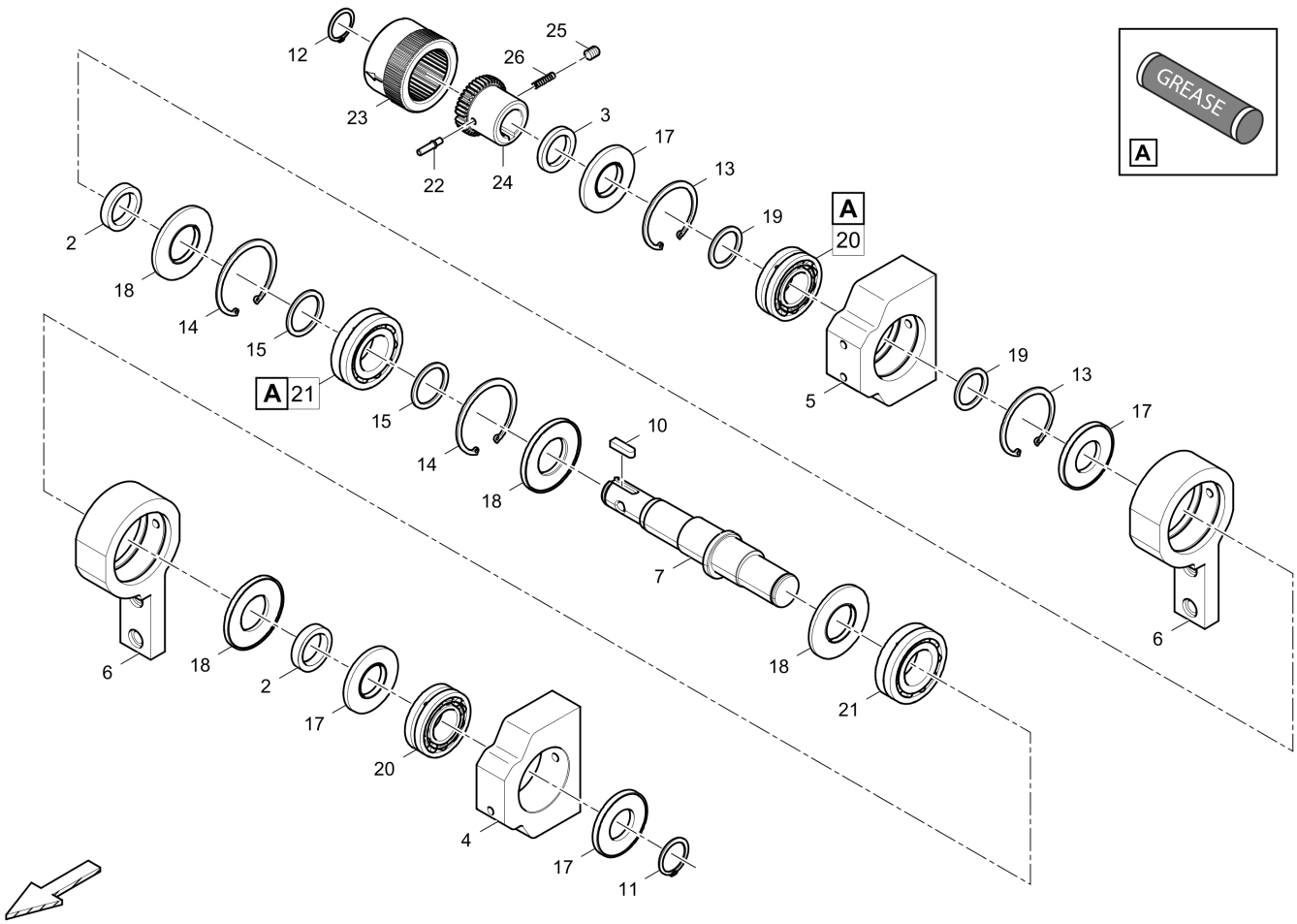

Item	Part No.	Name	Qty	L	C	SN INFO
2	4812013285	Spacer	2			
3	4812072166	Spacer	1			
4	4812013251	Bearing support	1			
5	4812013278	Bearing support	1			
6	4812012754	Rocker assy	2			
7	4812239658	Tamper shaft	1			
10	D931720739	Feather key	1			
11	0335113600	Snap ring	1			
12	D936001864	Circlip	1			
13	D936029651	Circlip	2			
14	4749900351	Circlip	2			
15	0324155159	Supporting washer	2			
17	4812019069	Packing	4			
18	4749302735	Sealing moulded product	4			
19	D932120750	Shim washer	2			
20	4812011215	Bearing	2			

Item	Part No.	Name	Qty	L	C	SN INFO
21	4749540044	Bearing	2			
22	4812072259	Shift pin	1			
23	4812072540	Coupling sleeve	1			
24	4812072534	Hub	1			
25	0190124143	Threaded pin	1			
26	4812072541	Compression spring	1			

Extension mount, AT300 r.h. 4812061880 Extension mount, AT300 r.h.

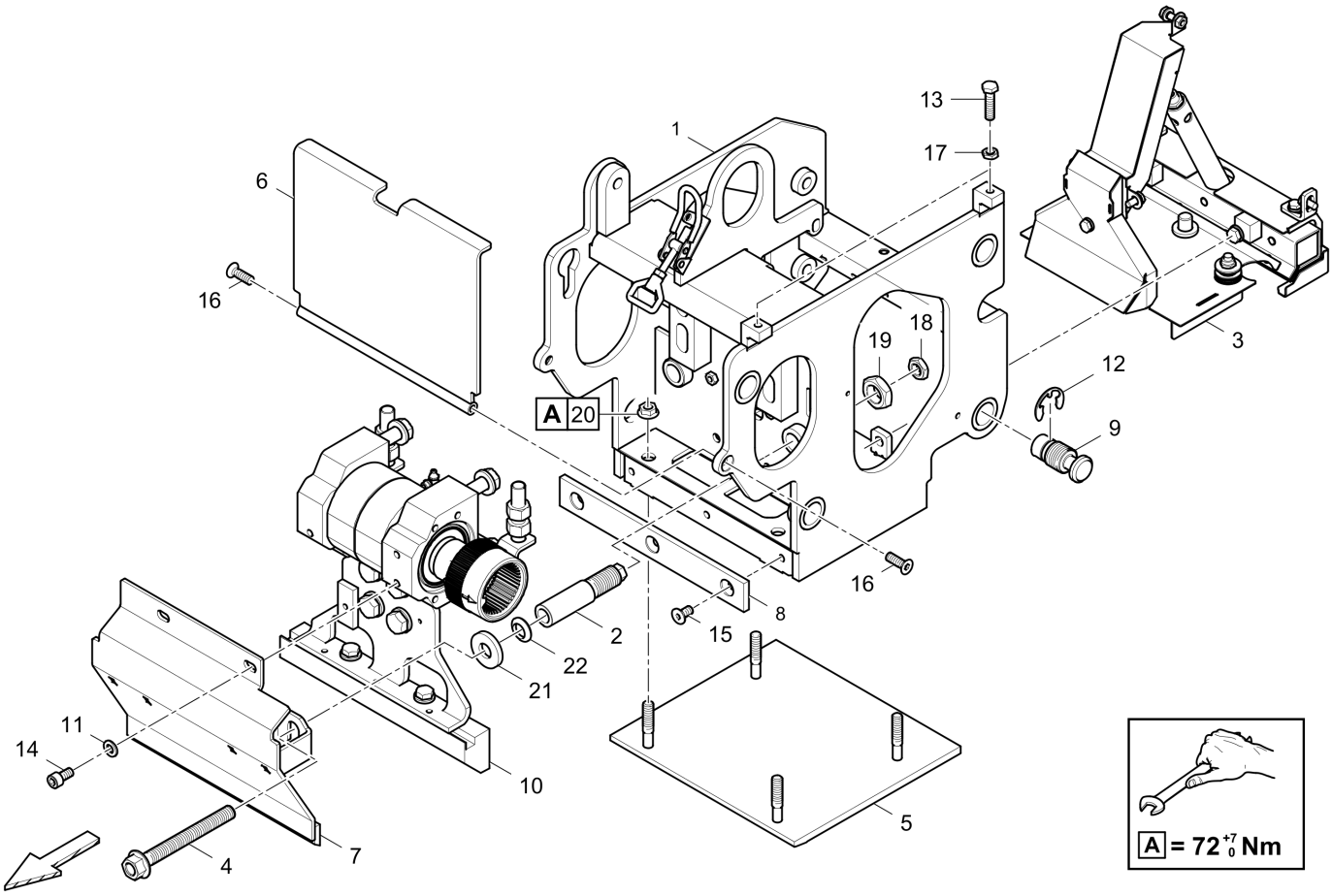

Item	Part No.	Name	Qty	L	C	SN INFO
1	4812061697	Extension mount, r.h.	1			
2	4812200922	Adjusting screw	2			
3	4812237589	Gas heating, AT300 r.h.	1			
4	4812014416	Threaded pin	2			
5	4812236794	Screed plate	1			
6	4812023490	Guard plate	1			
7	4812061727	Guard plate, below, r.h.	1			
8	4812012854	Wear plate	1			
9	4812014188	Draw spindle	4			
10	4812239661	Tamper drive, r.h.	1			
11	0333310051	Lock washer	2			
12	0335311300	Lock washer	4			
13	0147196264	Bolt	2			
14	0211136003	Hexagon socket head cap	2			
15	0216110056	Countersunk screw	3			
16	0216110016	Countersunk screw	2			

Item	Part No.	Name	Qty	L	C	SN INFO
17	0261211100	Hex.nut-M10	2			
18	0261211400	Hexagon nut	2			
19	0261109941	Hexagon nut	2			
20	0261109156	Tensilock nut	4			
21	D930284510	Conical washer	2			
22	D930298317	Washer	2			

Gas heating, AT300 r.h. 4812237589 Gas heating, AT300 r.h.

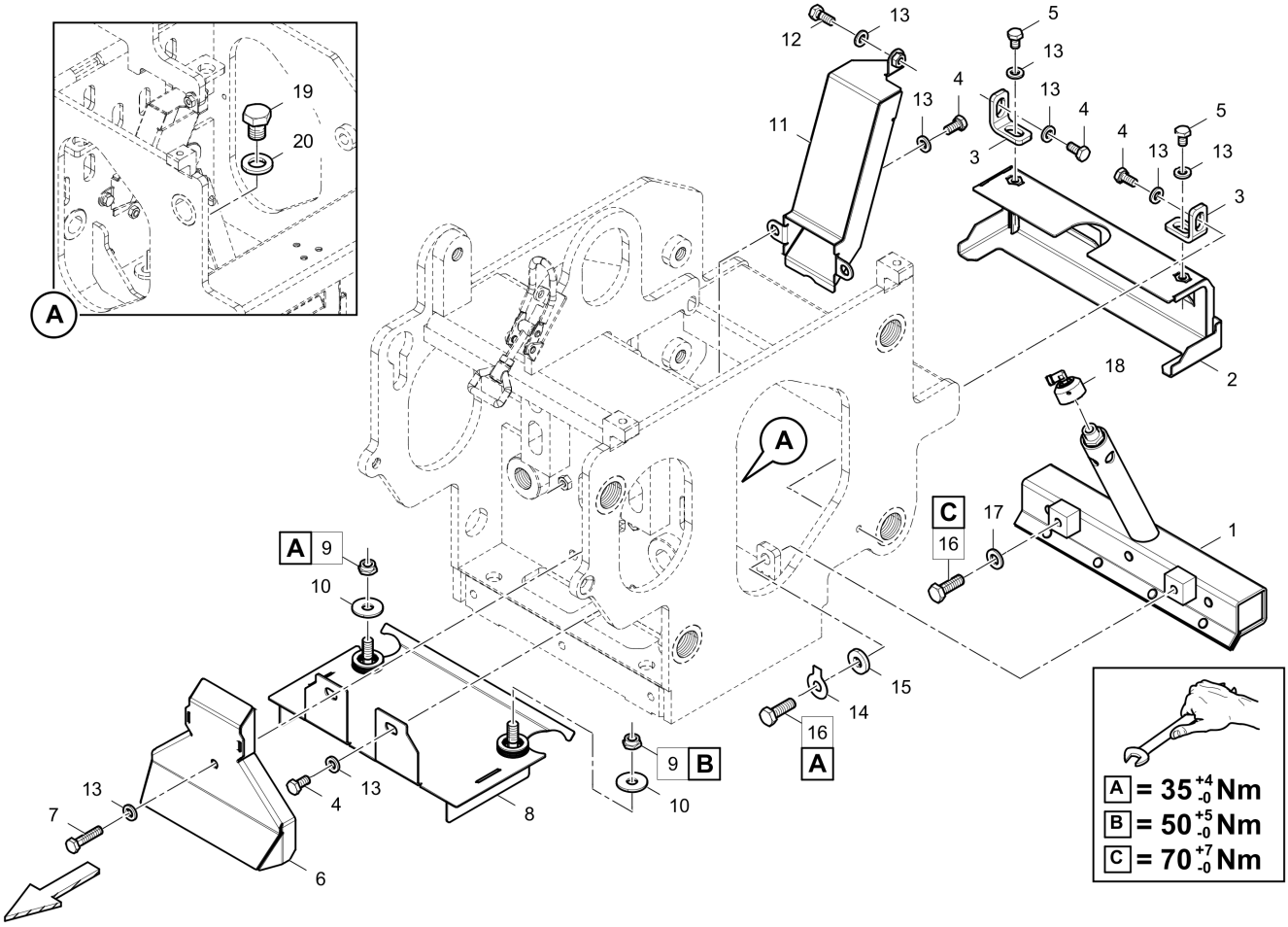

Item	Part No.	Name	Qty	L	C	SN INFO
1	4812013083	Injector burner	1			
2	4812014428	Protective strip	1			
3	4812013947	Fixing angle	2			
4	0147132203	Hexagon head screw	6			
5	0147132003	Hex. head screw	2			
6	4812012924	Air duct	1			
7	0147132703	Hexagon bolt	1			
8	4812013042	Flame baffle	1			
9	5541396800	Hexagon nut	2			
10	0300013038	Flat washer	2			
11	4812237471	Air duct	1			
12	0147132303	Hexagon bolt	1			
13	0333310050	Lock washer	10			
14	D936780009	Washer	1			
15	D939130012	Washer	1			
16	0147136303	Screw	2			

Item	Part No.	Name	Qty	L	C	SN INFO
17	0333310051	Lock washer	1			
18	4812072600	Gas feeder arr. AT300.	1			
19	0147147203	Hexagon head screw	2			
20	0333310049	Lock washer	2			

Referenced Pages

4812072600 Gas feeder arr. AT300. 55

Tamper drive, r.h. 4812239661 Tamper drive, r.h.

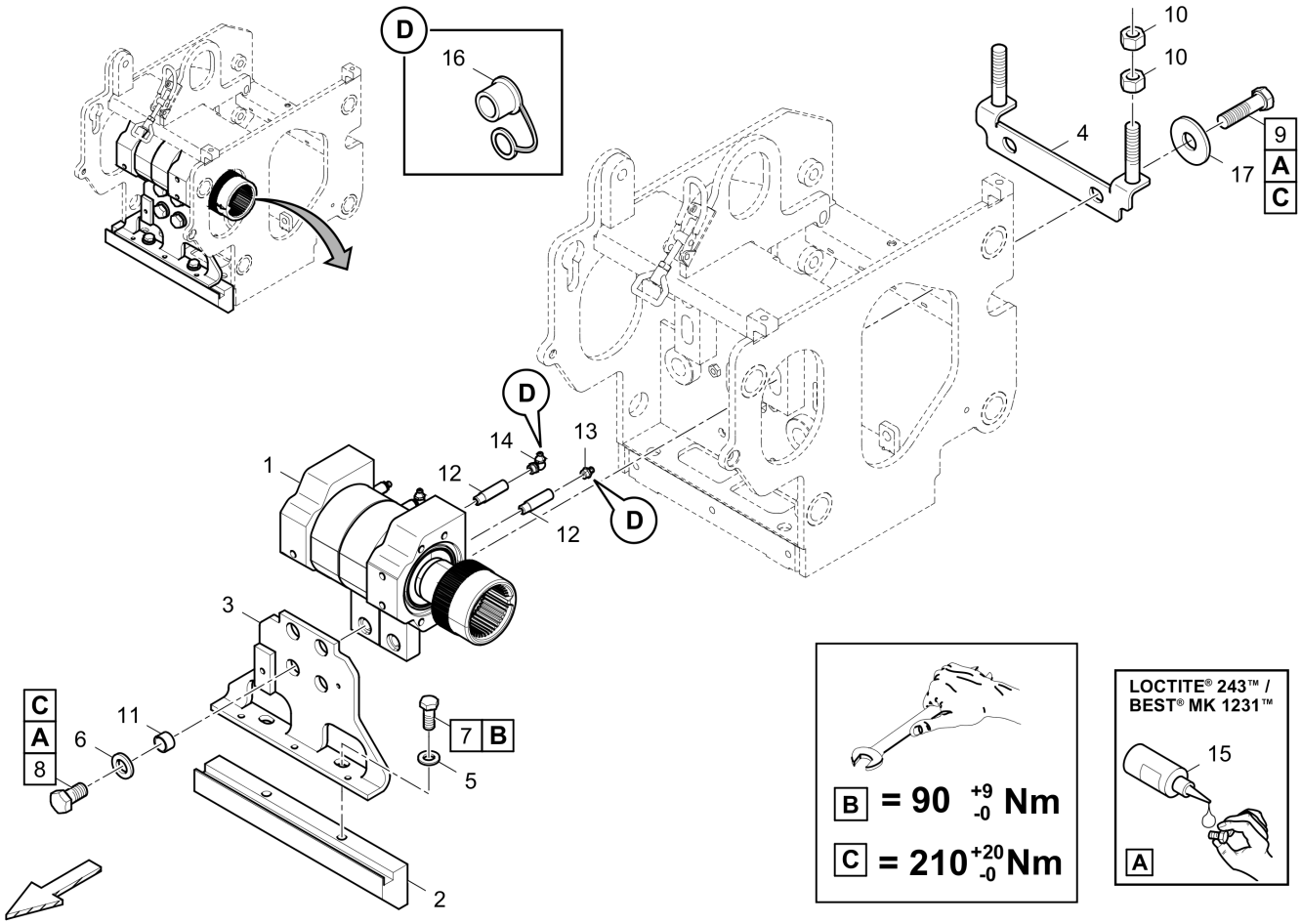

Item	Part No.	Name	Qty	L	C	SN INFO
1	4812239663	Tamper, r.h.	1			
2	4812012695	Tamper bar	1			
3	4812012691	Tamper frame	1			
4	4812012709	Brace	1			
5	0333310052	Flat washer	2			
6	0333310049	Lock washer	4			
7	0147140103	Screw	2			
8	0147147503	Hex bolt	4			
9	0147148203	Hex. head screw M16 x 65	4			
10	0266211400	Hexagon nut M16	4			
11	4749302339	Bushing	4			
12	4812073787	Adapter	4			
13	D935511210	Grease nipple	2			
14	D935513220	Grease nipple	2			
15	D930290215	Sealant	1			
16	4812011219	Protection cap	4			

Item	Part No.	Name	Qty	L	C	SN INFO
17	4749900538	Washer	4			

Tamper, r.h. 4812239663 Tamper, r.h.

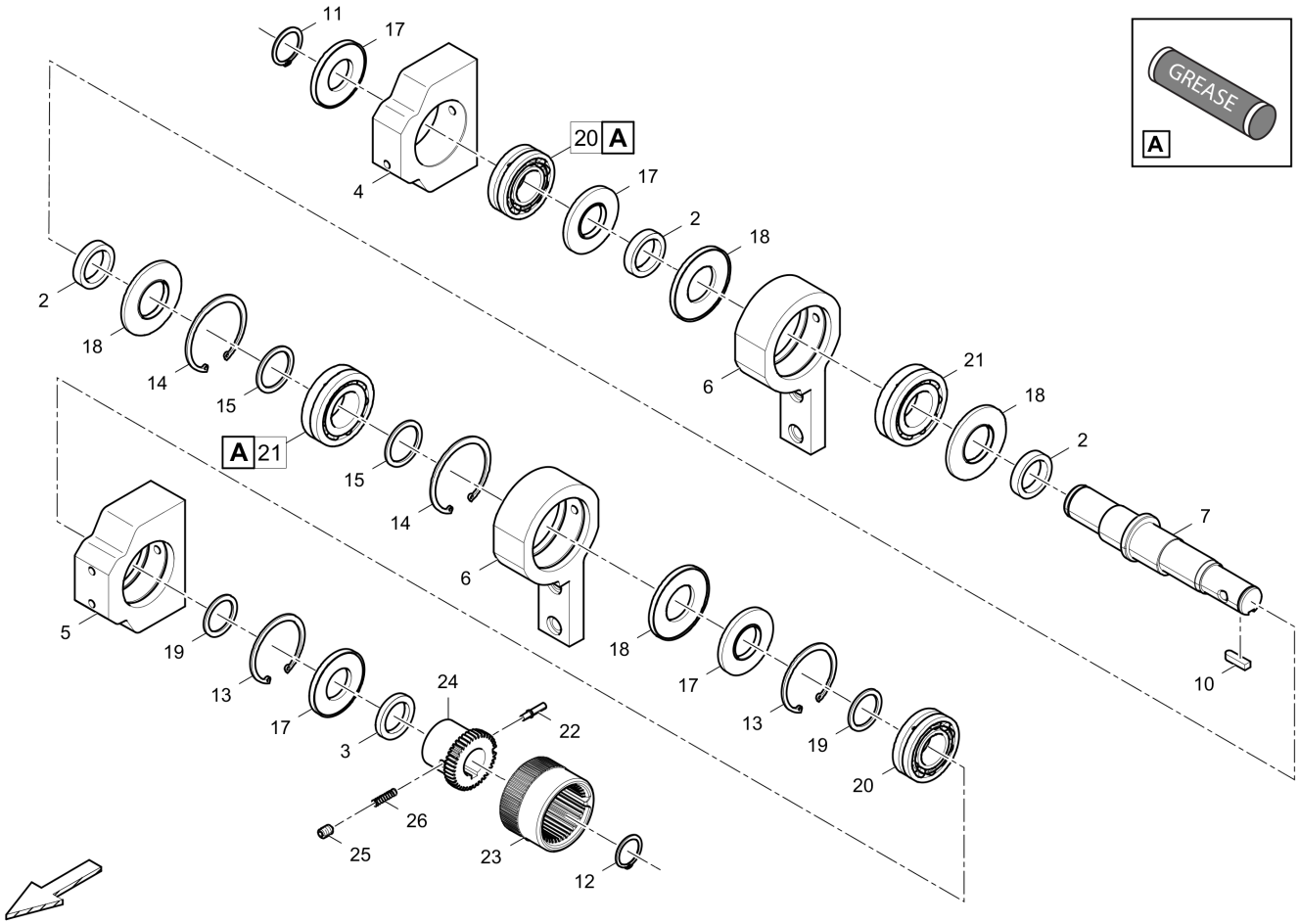

Item	Part No.	Name	Qty	L	C	SN INFO
2	4812013285	Spacer	2			
3	4812072166	Spacer	1			
4	4812013251	Bearing support	1			
5	4812013278	Bearing support	1			
6	4812012754	Rocker assy	2			
7	4812239658	Tamper shaft	1			
10	D931720739	Feather key	1			
11	0335113600	Snap ring	1			
12	D936001864	Circlip	1			
13	D936029651	Circlip	2			
14	4749900351	Circlip	2			
15	0324155159	Supporting washer	2			
17	4812019069	Packing	4			
18	4749302735	Sealing moulded product	4			
19	D932120750	Shim washer	2			
20	4812011215	Bearing	2			

Item	Part No.	Name	Qty	L	C	SN INFO
21	4749540044	Bearing	2			
22	4812072259	Shift pin	1			
23	4812072540	Coupling sleeve	1			
24	4812072534	Hub	1			
25	0190124143	Threaded pin	1			
26	4812072541	Compression spring	1			

Operation width, 3.50m 4812061874 Operation width, 3.50m

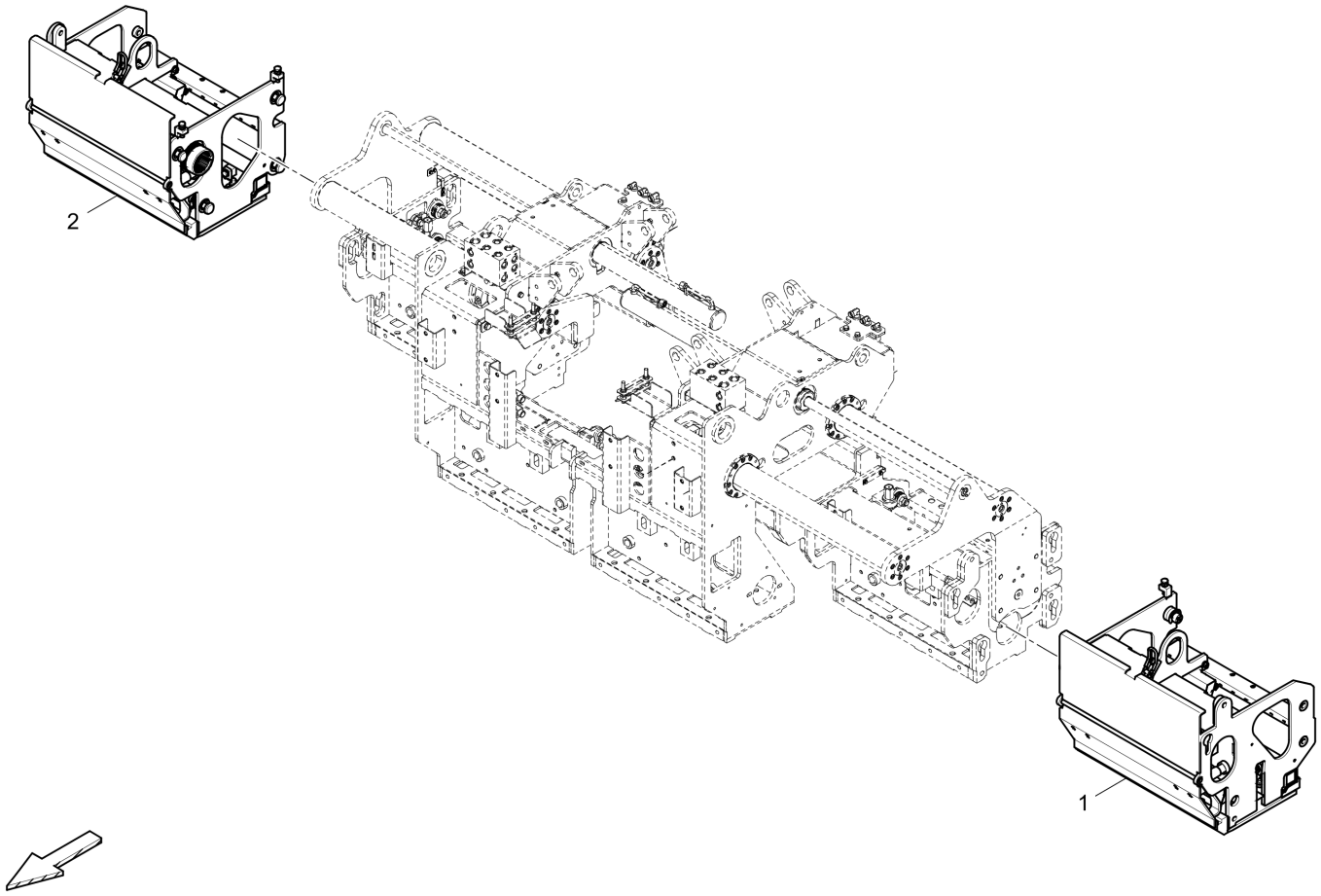

Item	Part No.	Name	Qty	L	C	SN INFO
1	4812061875	Extension mount, AT550 l.h.	1			
2	4812061876	Extension mount, AT550 r.h.	1			

Extension mount, AT550 l.h. 4812061875 Extension mount, AT550 l.h.

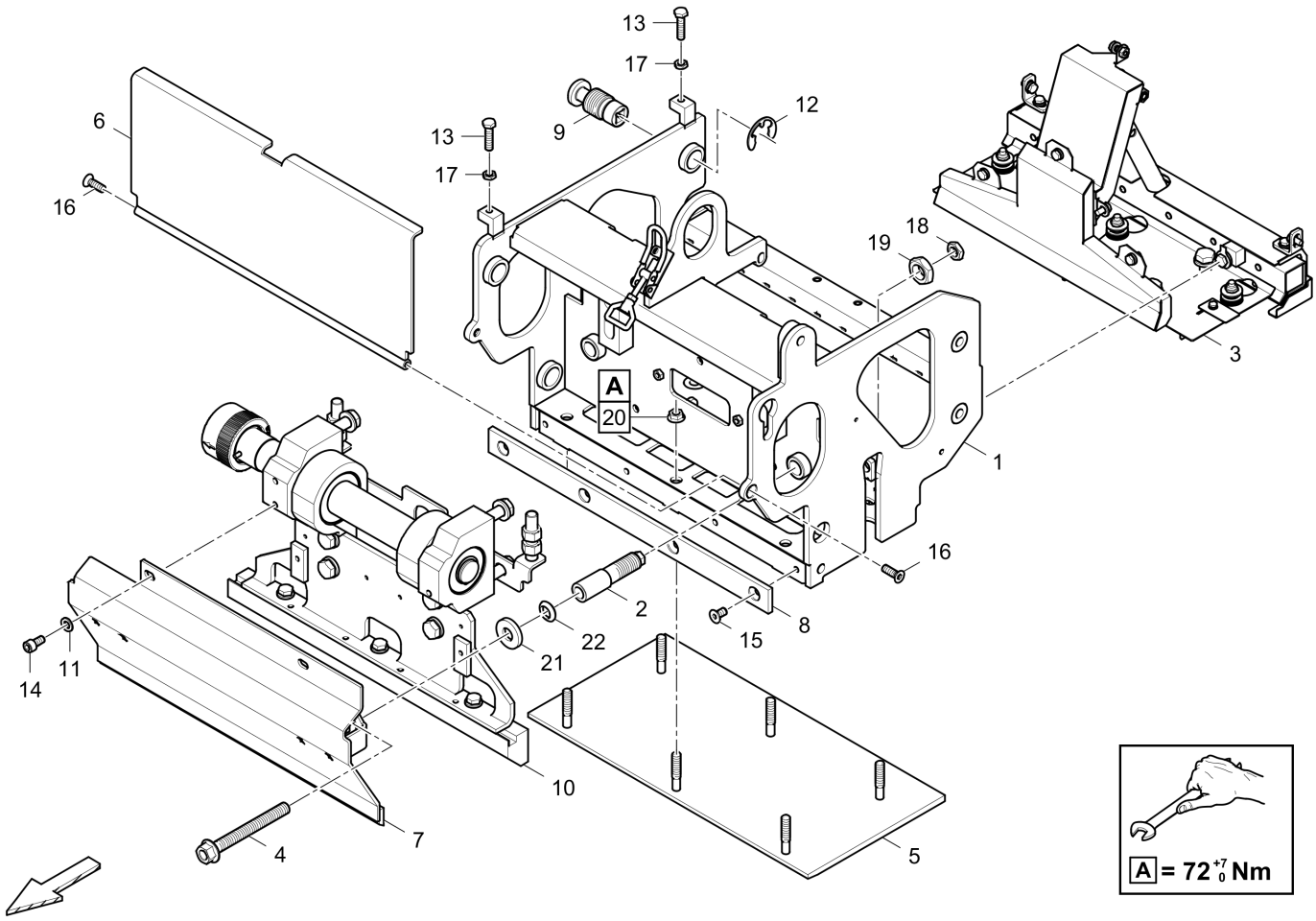

Item	Part No.	Name	Qty	L	C	SN INFO
1	4812071784	Extension mount, l.h.	1			
2	4812200922	Adjusting screw	2			
3	4812236583	Gas heating, l.h.	1			
4	4812014416	Threaded pin	2			
5	4812236584	Screed plate	1			
6	4812236587	Guard plate, above	1			
7	4812071776	Guard plate, below	1			
8	4812236586	Wear plate	1			
9	4812014188	Draw spindle	4			
10	4812071771	Tamper drive, l.h.	1			
11	0333310051	Lock washer	2			
12	0335311300	Lock washer	4			
13	0147196264	Bolt	2			
14	0211136003	Hexagon socket head cap	2			
15	0216110056	Countersunk screw	4			
16	0216110016	Countersunk screw	2			

Item	Part No.	Name	Qty	L	C	SN INFO
17	0261211100	Hex.nut-M10	2			
18	0261211400	Hexagon nut	2			
19	0261109941	Hexagon nut	2			
20	0261109156	Tensilock nut	6			
21	D930284510	Conical washer	2			
22	D930298317	Washer	2			

Gas heating, AT550 l.h. 4812236583 Gas heating, AT550 l.h.

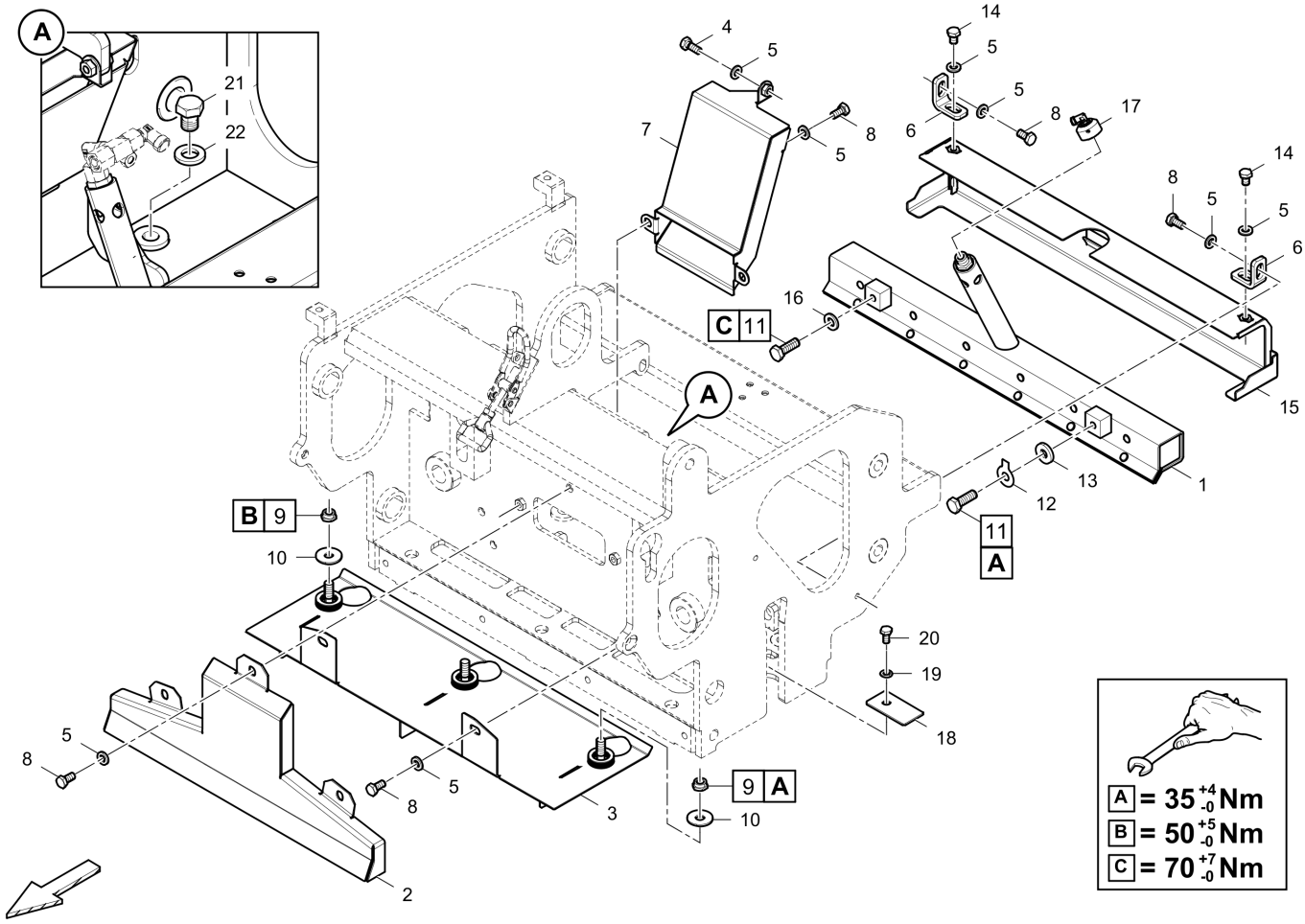

Item	Part No.	Name	Qty	L	C	SN INFO
1	4812236598	Injector burner	1			
2	4812236668	Air duct	1			
3	4812236600	Flame baffle	1			
4	0147132303	Hexagon bolt	1			
5	0333310050	Lock washer	12			
6	4812013947	Fixing angle	2			
7	4812236672	Air duct	1			
8	0147132203	Hexagon head screw	9			
9	5541396800	Hexagon nut	3			
10	0300013038	Flat washer	3			
11	0147136303	Screw	2			
12	D936780009	Washer	1			
13	D939130012	Washer	1			
14	0147132003	Hex. head screw	2			
15	4812236599	Protective strip	1			
16	0333310051	Lock washer	1			

Item	Part No.	Name	Qty	L	C	SN INFO
17	4812072984	Gas feeder arr. AT550.	1			
18	4812236863	Sealing	1			
19	0301232100	Plain washer	1			
20	0147124403	Screw	1			
21	0147147203	Hexagon head screw	4			
22	0333310049	Lock washer	4			

Gas feeder arr. AT550. 4812072984 Gas feeder arr. AT550.

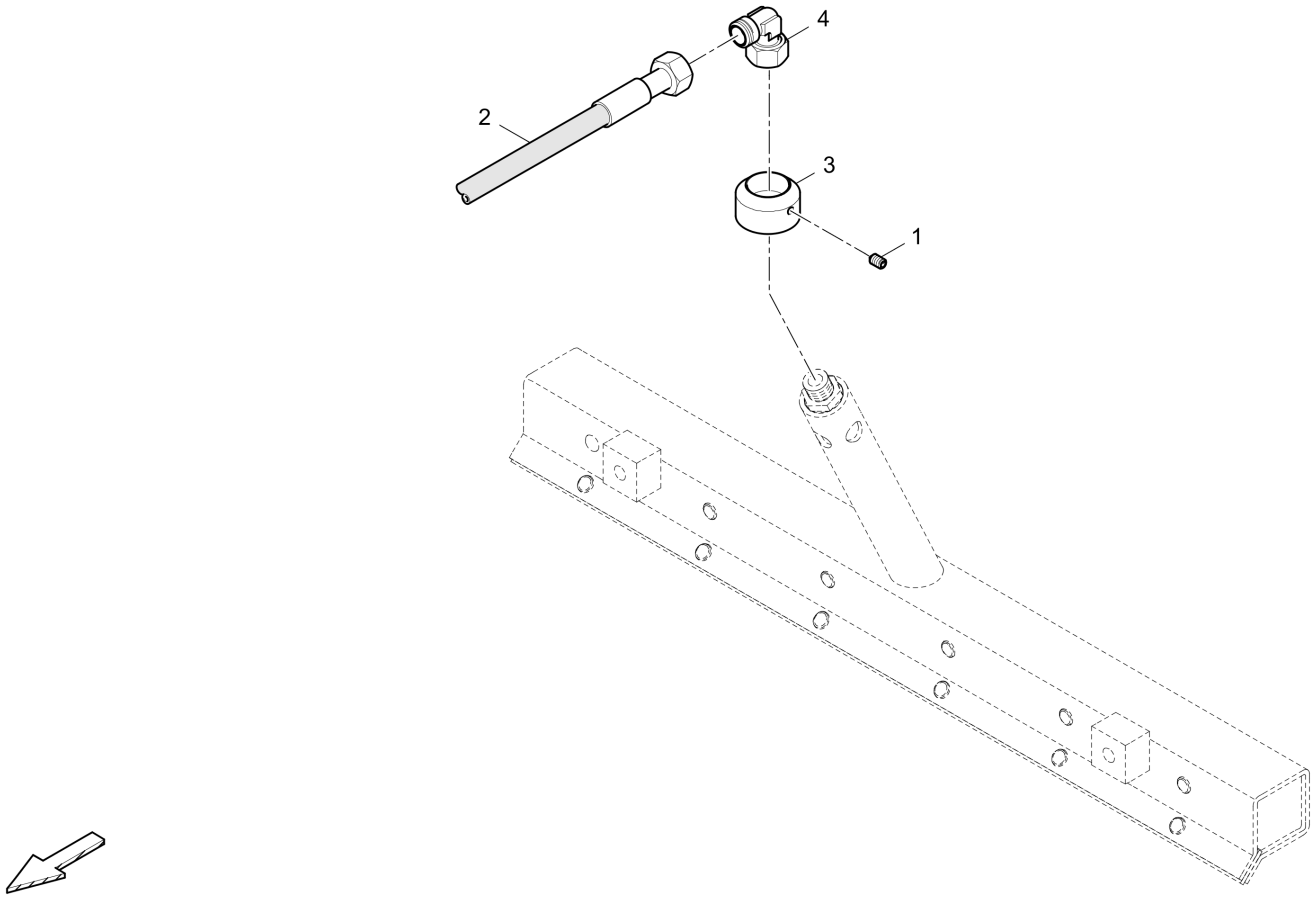

Item	Part No.	Name	Qty	L	C	SN INFO
1	D937954487	Threaded pin	2			
2	4749240537	Gas hose	1			
3	4730011597	Primary air throttle	1			
4	D961917006	Elbow socket	1			

Tamper drive, l.h. 4812071771 Tamper drive, l.h.

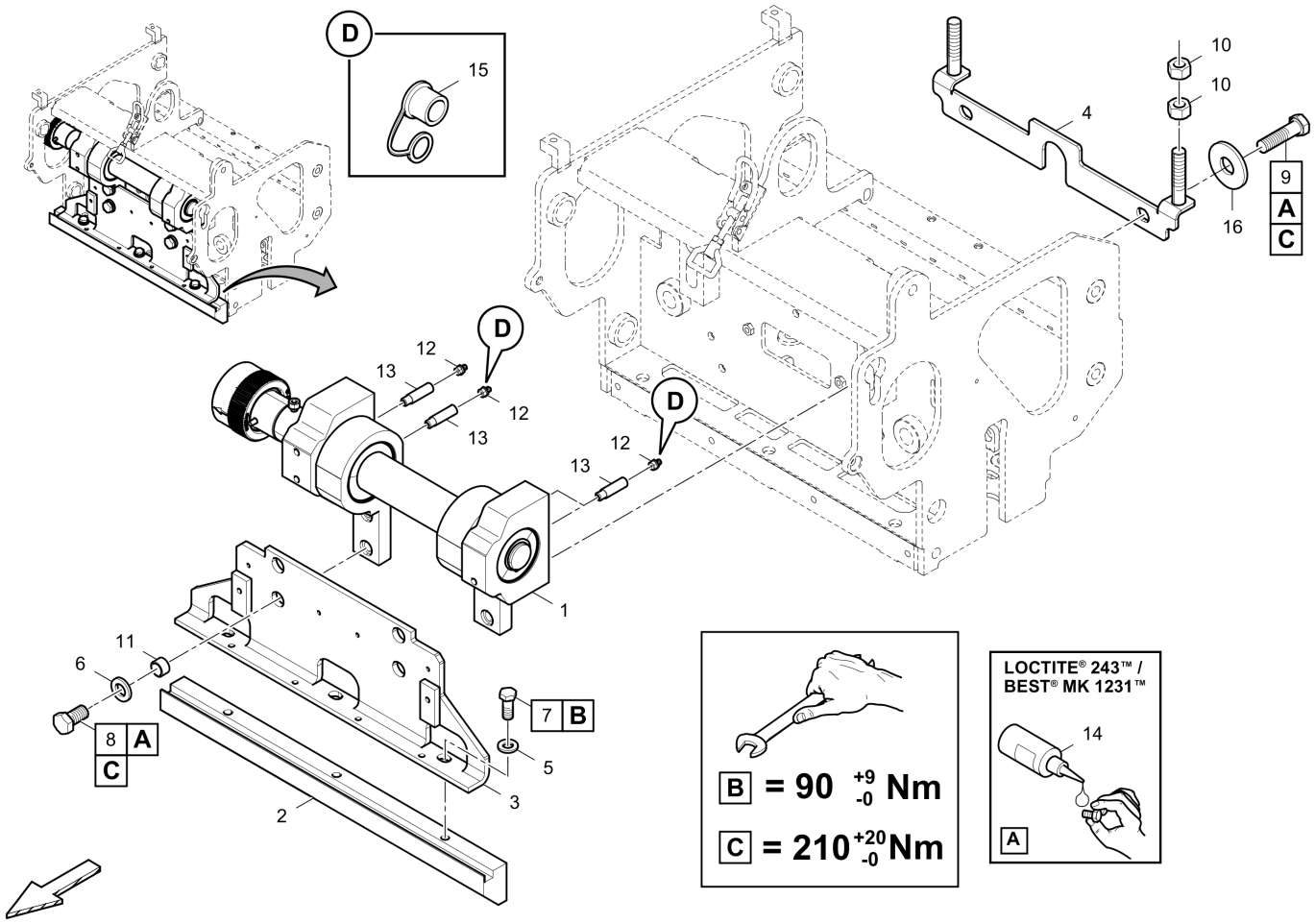

Item	Part No.	Name	Qty	L	C	SN INFO
1	4812071772	Tamper, l.h.	1			
2	4812064057	Tamper bar	1			
3	4812215647	Tamper frame	1			
4	4812236607	Brace	1			
5	0333310052	Flat washer	3			
6	0333310049	Lock washer	4			
7	0147140103	Screw	3			
8	0147147503	Hex bolt	4			
9	0147148203	Hex. head screw M16 x 65	4			
10	0266211400	Hexagon nut M16	4			
11	4749302339	Bushing	4			
12	D935511210	Grease nipple	4			
13	4812073787	Adapter	4			
14	D930290215	Sealant	1			
15	4812011219	Protection cap	4			
16	4749900538	Washer	4			

Tamper, l.h. 4812071772 Tamper, l.h.

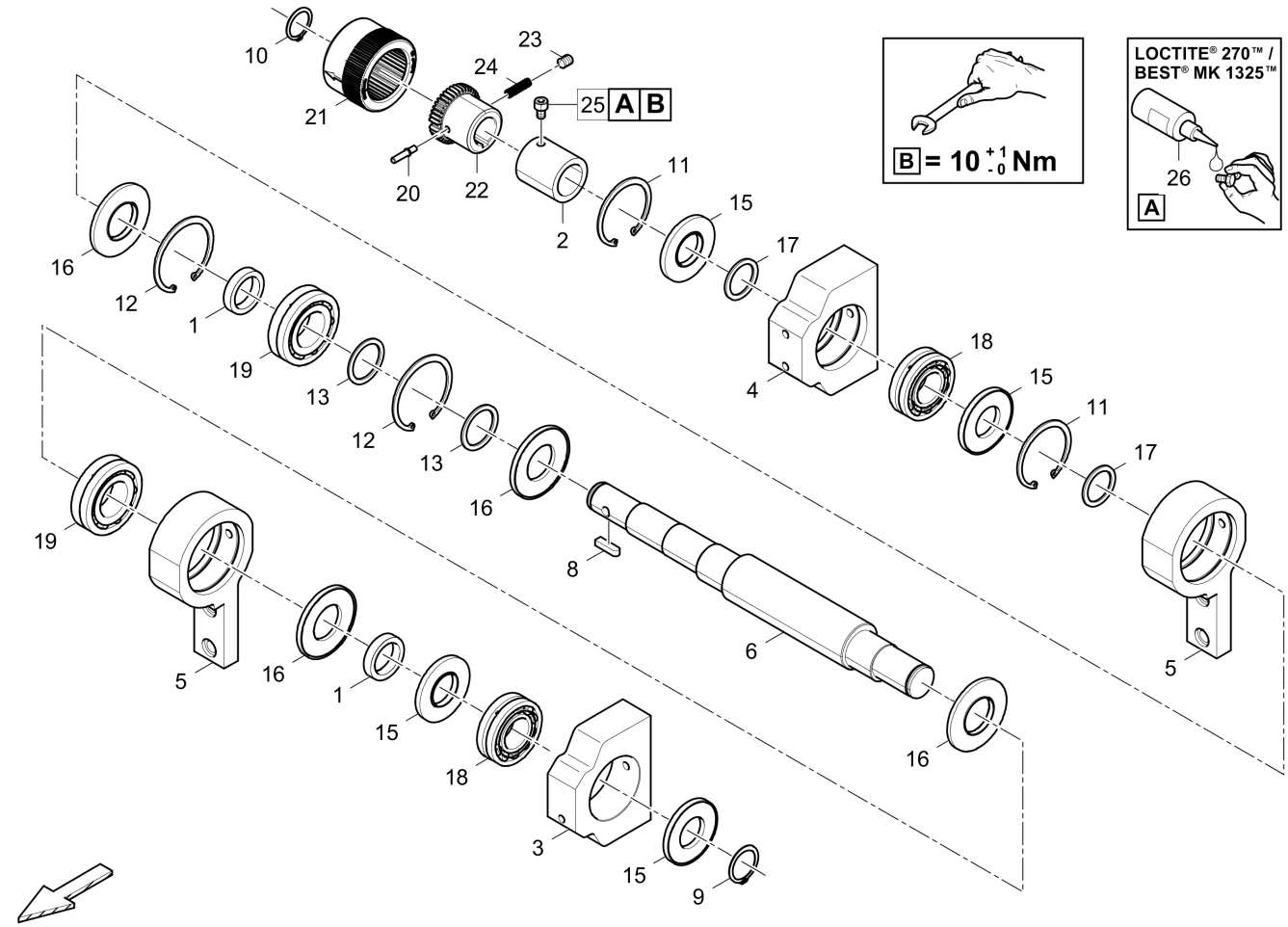

Item	Part No.	Name	Qty	L	C	SN INFO
1	4812013285	Spacer	2			
2	4812216041	Spacer	1			
3	4812013251	Bearing support	1			
4	4812013278	Bearing support	1			
5	4812012754	Rocker assy	2			
6	4812071773	Tamper shaft	1			
8	D931720739	Feather key	1			
9	0335113600	Snap ring	1			
10	D936001864	Circlip	1			
11	D936029651	Circlip	2			
12	4749900351	Circlip	2			
13	0324155159	Supporting washer	2			
15	4812019069	Packing	4			
16	4749302735	Sealing moulded product	4			
17	D932120750	Shim washer	2			
18	4812011215	Bearing	2			

Item	Part No.	Name	Qty	L	C	SN INFO
19	4749540044	Bearing	2			
20	4812072259	Shift pin	1			
21	4812072540	Coupling sleeve	1			
22	4812072534	Hub	1			
23	0190124143	Threaded pin	1			
24	4812072541	Compression spring	1			
25	0211132003	Screw	1			
26	4747400056	Thread locking, 50ml	1			

Extension mount, AT550 r.h. 4812061876 Extension mount, AT550 r.h.

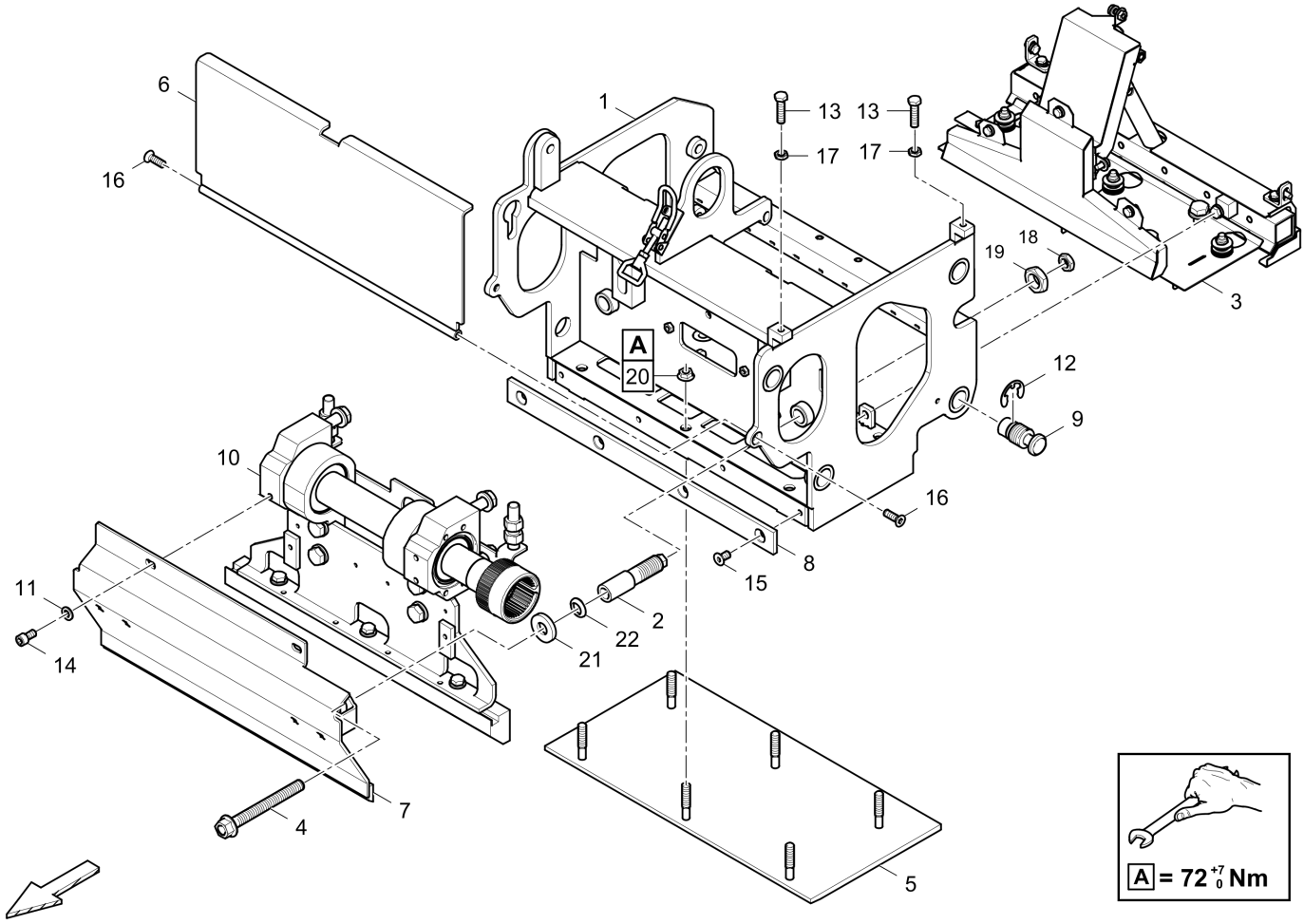

Item	Part No.	Name	Qty	L	C	SN INFO
1	4812071786	Extension mount, r.h.	1			
2	4812200922	Adjusting screw	2			
3	4812236746	Gas heating, AT550 r.h.	1			
4	4812014416	Threaded pin	2			
5	4812236584	Screed plate	1			
6	4812236587	Guard plate, above	1			
7	4812071780	Guard plate, below	1			
8	4812236586	Wear plate	1			
9	4812014188	Draw spindle	4			
10	4812071774	Tamper drive, r.h.	1			
11	0333310051	Lock washer	2			
12	0335311300	Lock washer	4			
13	0147196264	Bolt	2			
14	0211136003	Hexagon socket head cap	2			
15	0216110056	Countersunk screw	4			
16	0216110016	Countersunk screw	2			

Item	Part No.	Name	Qty	L	C	SN INFO
17	0261211100	Hex.nut-M10	2			
18	0261211400	Hexagon nut	2			
19	0261109941	Hexagon nut	2			
20	0261109156	Tensilock nut	6			
21	D930284510	Conical washer	2			
22	D930298317	Washer	2			

Gas heating, AT550 r.h. 4812236746 Gas heating, AT550 r.h.

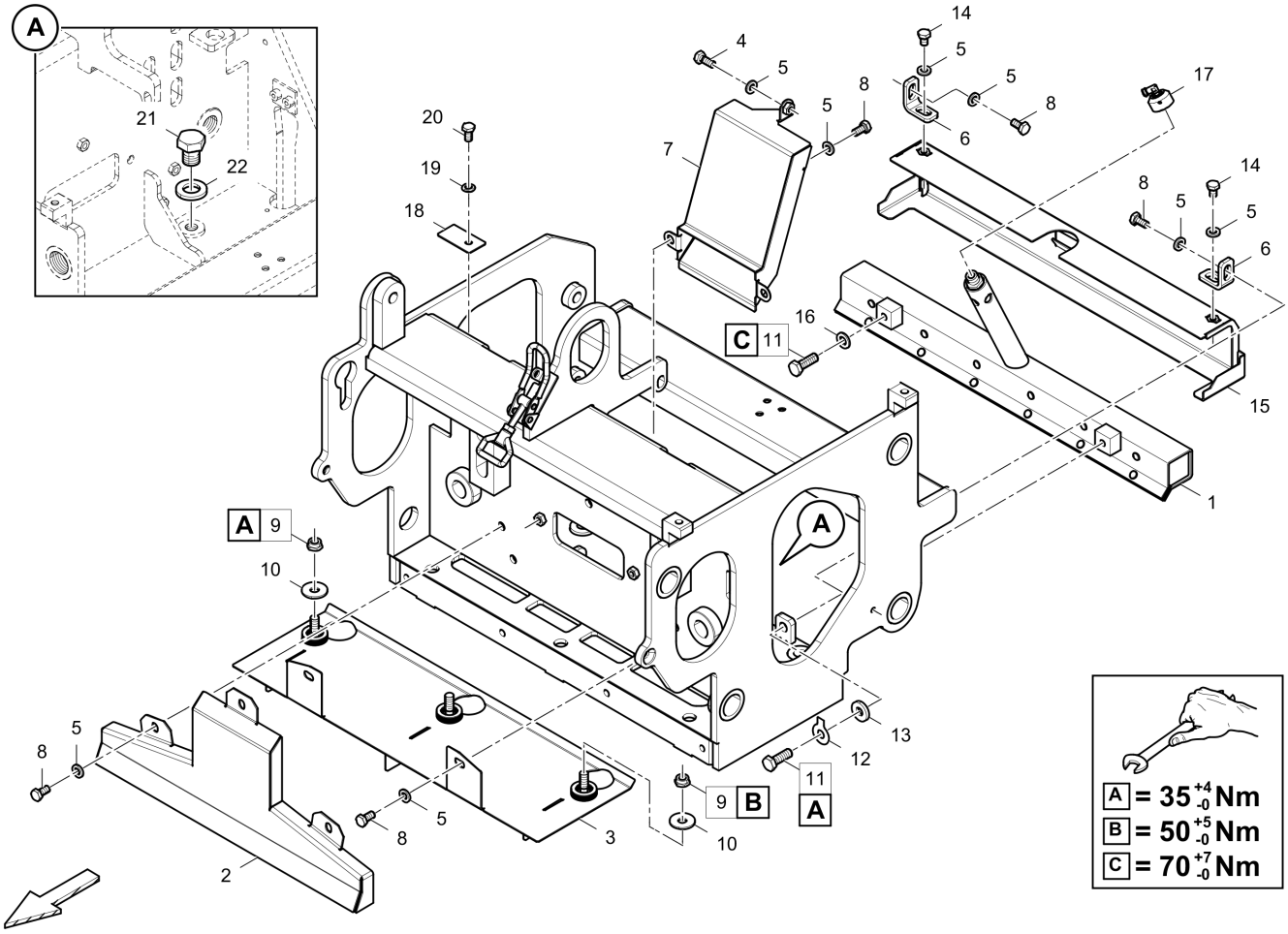

Item	Part No.	Name	Qty	L	C	SN INFO
1	4812236598	Injector burner	1			
2	4812236668	Air duct	1			
3	4812236600	Flame baffle	1			
4	0147132303	Hexagon bolt	1			
5	0333310050	Lock washer	12			
6	4812013947	Fixing angle	2			
7	4812236672	Air duct	1			
8	0147132203	Hexagon head screw	9			
9	5541396800	Hexagon nut	3			
10	0300013038	Flat washer	3			
11	0147136303	Screw	2			
12	D936780009	Washer	1			
13	D939130012	Washer	1			
14	0147132003	Hex. head screw	2			
15	4812236599	Protective strip	1			
16	0333310051	Lock washer	1			

Item	Part No.	Name	Qty	L	C	SN INFO
17	4812072984	Gas feeder arr. AT550.	1			
18	4812236863	Sealing	1			
19	0301232100	Plain washer	1			
20	0147124403	Screw	1			
21	0147147203	Hexagon head screw	4			
22	0333310049	Lock washer	4			

Referenced Pages

4812072984 Gas feeder arr. AT550. 74

Referenced Pages

4812071772 Tamper, l.h. 76

Referenced Pages

4812071771 Tamper drive, l.h. 75

Referenced Pages

4812061128 Extension unit, l.h. 26

Referenced Pages

4812061177 Extension unit, r.h. 27

Referenced Pages

4812024535 Hose guide 28

Referenced Pages

4812061133 Scale holder, l.h. 29

Referenced Pages

4812061145 Scale holder, r.h. 30

Referenced Pages

4812061076A Basic screed 20

Electric heating - TVE 4812216918 Electric heating

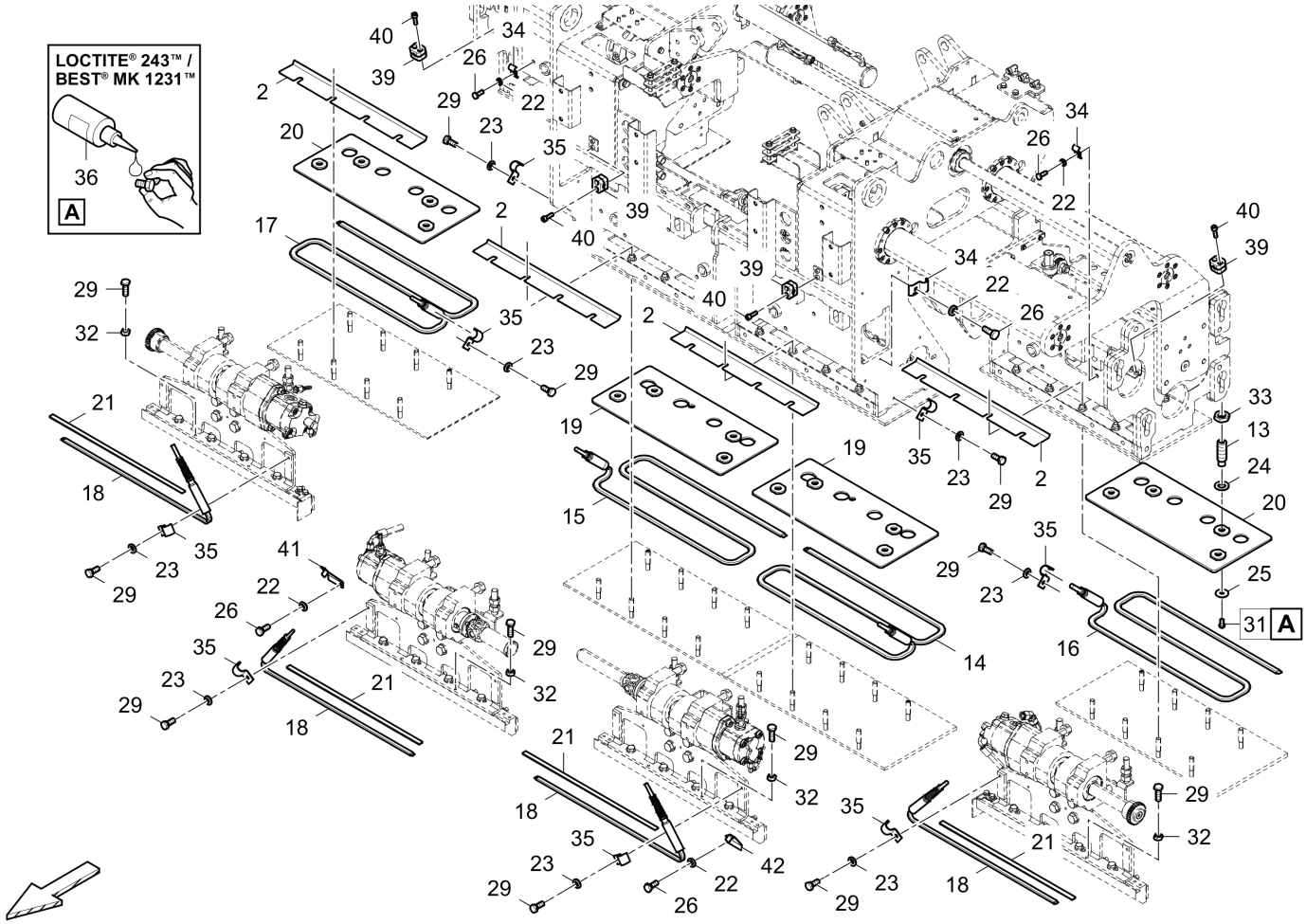

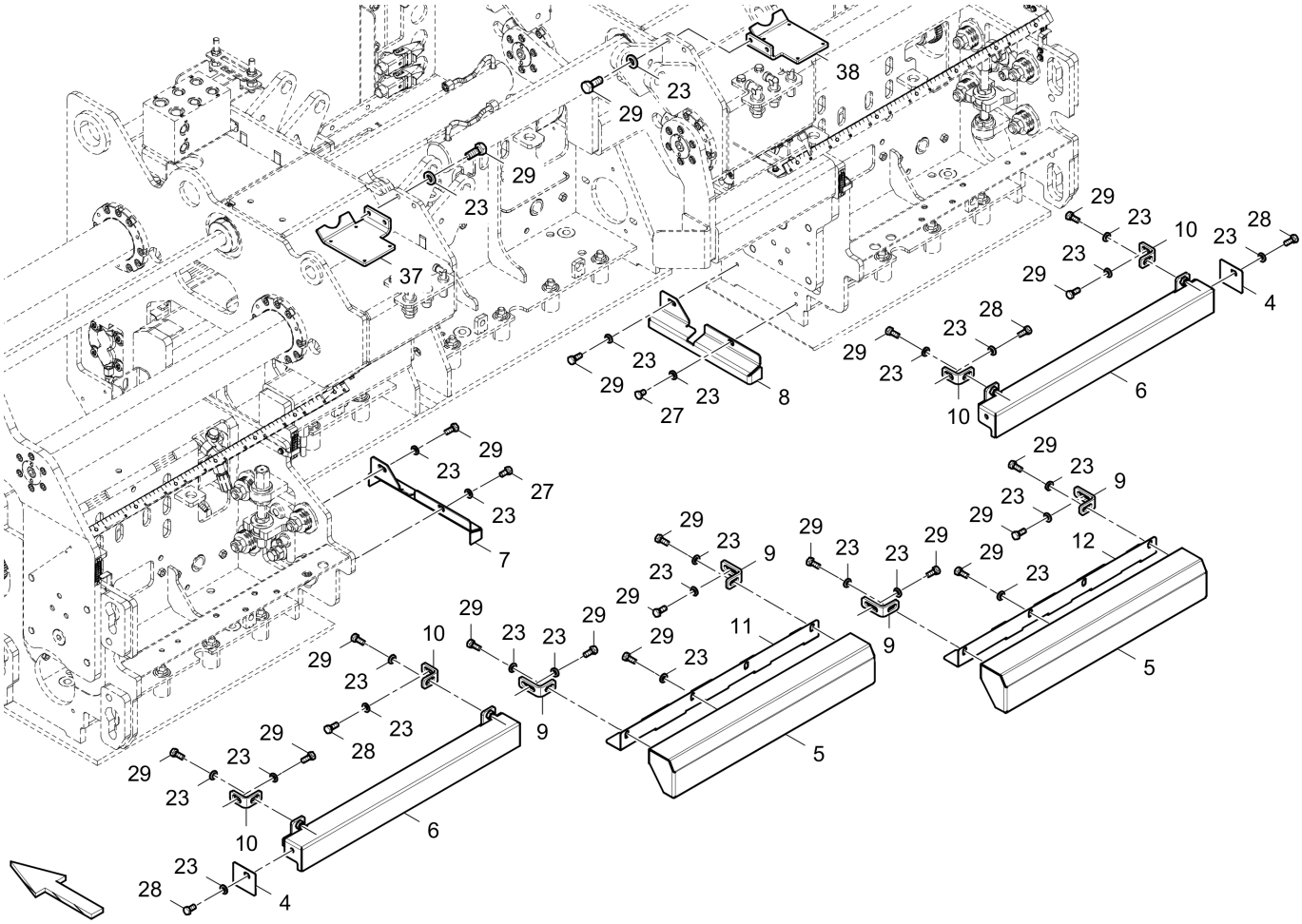

Item	Part No.	Name	Qty	L	C	SN INFO
2	4812014720	Cover plate	4			
4	4812013943	Cover plate extension	2			
5	4812216921	Hood, inner.	2			
6	4812201841	Hood VT	2			
7	4812013944	Hood extension, l.h.	1			
8	4812013946	Hood extension, r.h.	1			
9	4812015599	Fixing angle	4			
10	4812013947	Fixing angle	4			
11	4812073149	Sheet metal	1			
12	4812071210	Sealing plate, r.h.	1			
13	4812019777	Adjusting screw	8			
14	4812217575	Flat tube heater, inside, l.h.	1			
15	4812217576	Flat tube heater, inside, r.h.	1			
16	4812217577	Flat tube heater, outside, l.h.	1			
17	4812217578	Flat tube heater, outside, r.h.	1			
18	4812217580	Flat tube heater	4			
19	4812014672	Clamping plate MT	2			

Item	Part No.	Name	Qty	L	C	SN INFO
20	4812014736	Clamping plate VT	2			
21	4812014734	Flat steel	4			
22	0333310055	Washer	14			
23	0333310050	Lock washer	36			
24	0301235800	Plain washer	8			
25	0300013047	Flat washer	8			
26	0147124603	Screw	14			
27	0147132003	Hex. head screw	2			
28	0147132203	Hexagon head screw	4			
29	0147132303	Hexagon bolt	38			
31	0215000621	Flat headed screw	8			
32	0266211000	Hexagon nut	8			
33	0261211400	Hexagon nut	8			
34	4812071229	Pipe clamp	12			
35	4812012673	Pipe clamp	8			
36	D930290215	Sealant	1			
37	4812073788	Adapter plate, l.h.	1			
38	4812075371	Adapter plate, r.h.	1			
39	4749302455	Clamp	4			
40	0211124703	Hex sock. screw	8			
41	4812075515	Spill plate, r.h.	1			
42	4812075628	Spill plate, l.h.	1			

Referenced Pages

4812216810 Top con rod, rear. 40

Referenced Pages

4812060918 Track adjuster 41

Referenced Pages

4812060916 Top con rod, rear. 39

Referenced Pages

4812216804 Top con rod, front. 43

Referenced Pages

4812060920 Track adjuster 44

Referenced Pages

4812060917 Top con rod, front. 42

Referenced Pages

4812060915 Profile adjustment 38

Referenced Pages

4812061266 Kit, tamper guide 7

Referenced Pages

4812061280 Hood, l.h. 48

Referenced Pages

4812061283 Hood, r.h. 49

Referenced Pages

4812061255 Protection and trim plates 45

Operation width, 3.00m 4812072159 Operation width, 3.00m

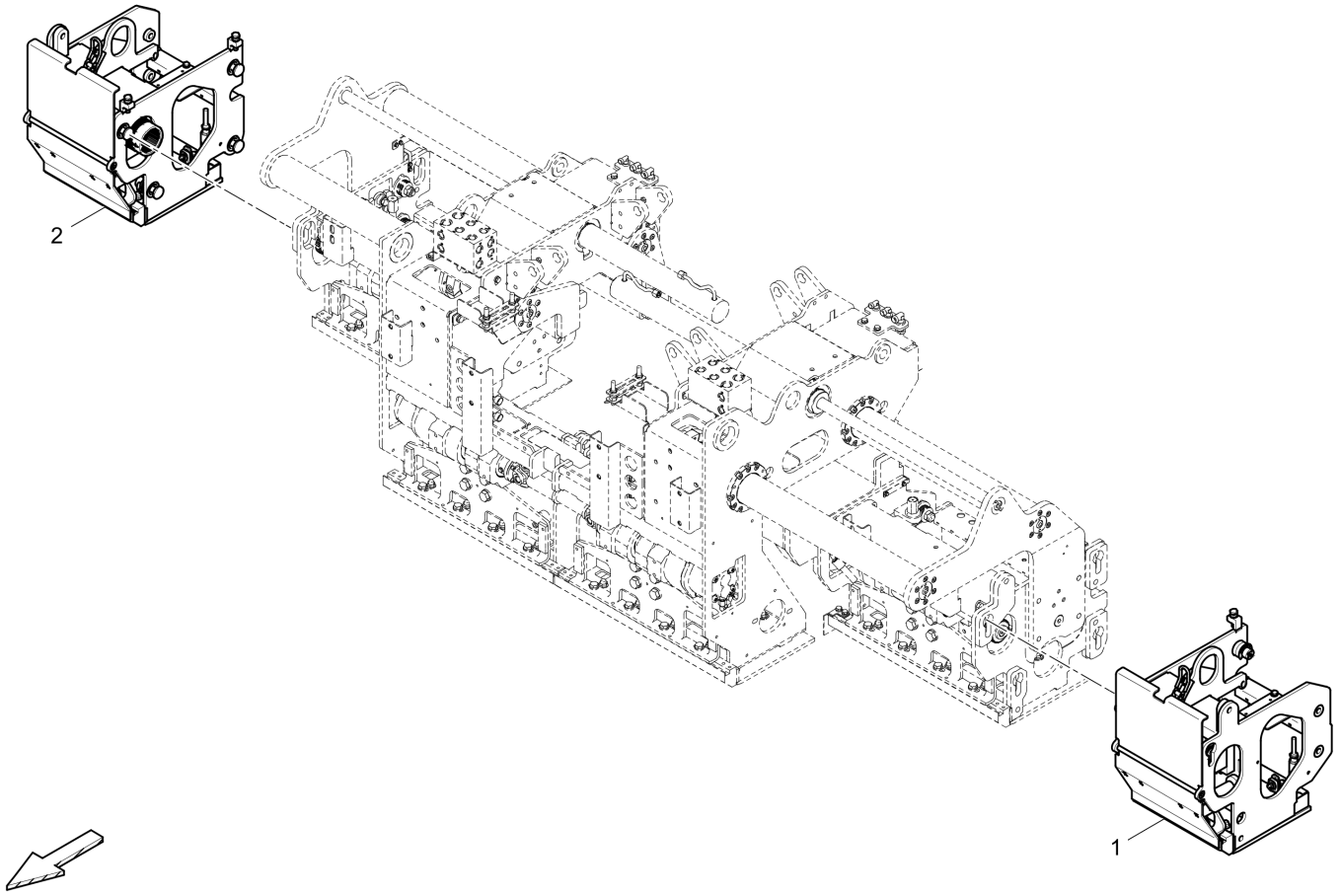

Item	Part No.	Name	Qty	L	C	SN INFO
1	4812072160	Extension mount, l.h.	1			
2	4812072161	Extension mount, r.h.	1			

Extension mount, l.h. 4812072160 Extension mount, l.h.

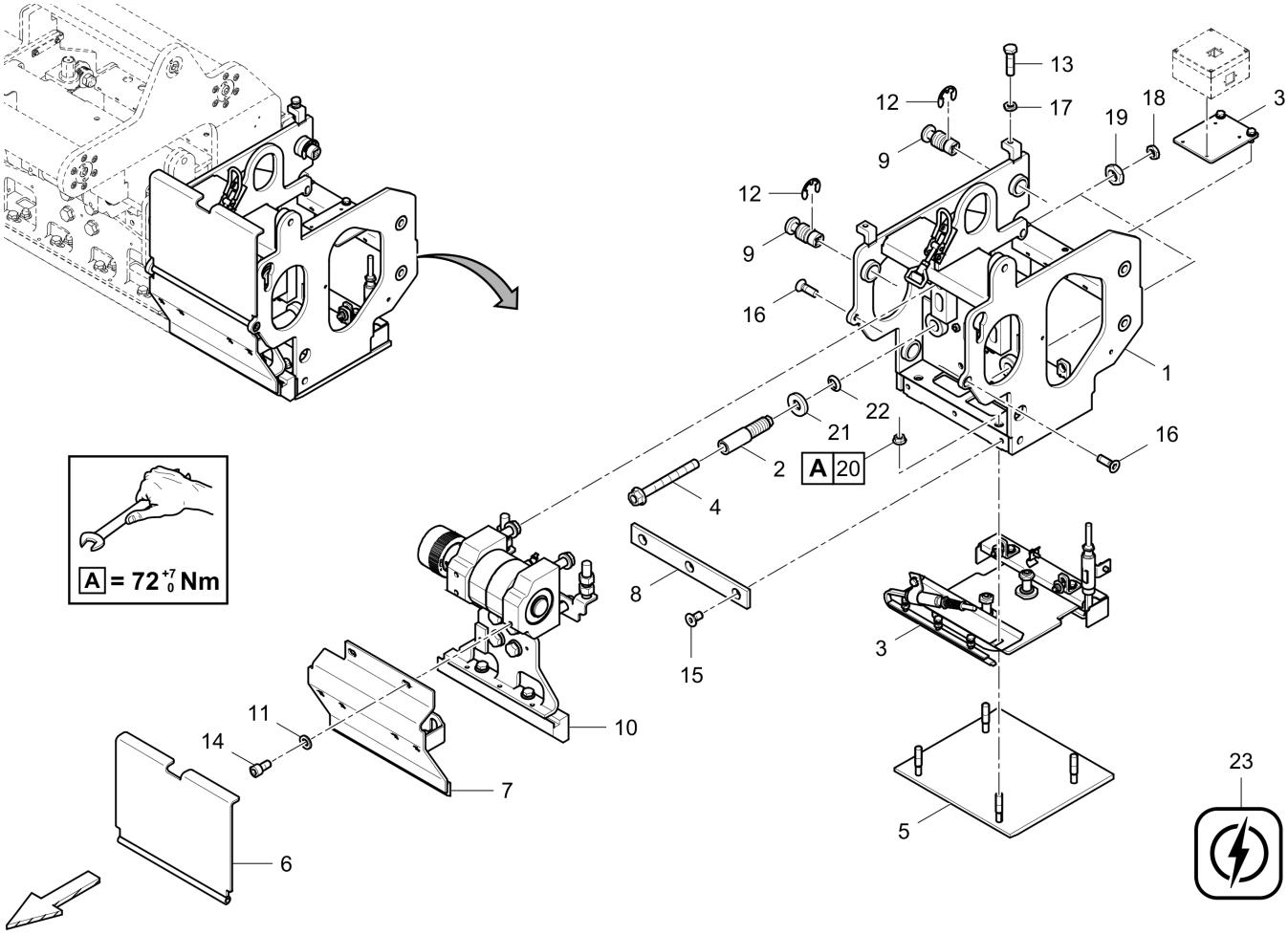

Item	Part No.	Name	Qty	L	C	SN INFO
1	4812061700	Extension mount, l.h.	1			
2	4812200922	Adjusting screw	2			
3	4812061736	Electric heating	1			
4	4812014416	Threaded pin	2			
5	4812236794	Screed plate	1			
6	4812023490	Guard plate	1			
7	4812061723	Guard plate, below, l.h.	1			
8	4812012854	Wear plate	1			
9	4812014188	Draw spindle	4			
10	4812239660	Tamper drive, l.h.	1			
11	0333310051	Lock washer	2			
12	0335311300	Lock washer	4			
13	0147196264	Bolt	2			
14	0147136003	Screw cap	2			
15	0216110056	Countersunk screw	3			
16	0216110016	Countersunk screw	2			

Item	Part No.	Name	Qty	L	C	SN INFO
17	0261211100	Hex.nut-M10	2			
18	0261211400	Hexagon nut	2			
19	0261109941	Hexagon nut	2			
20	0261109156	Tensilock nut	4			
21	D930284510	Conical washer	2			
22	D930298317	Washer	2			
23	4812018013	Electric	1			

Electric heating 4812061736 Electric heating

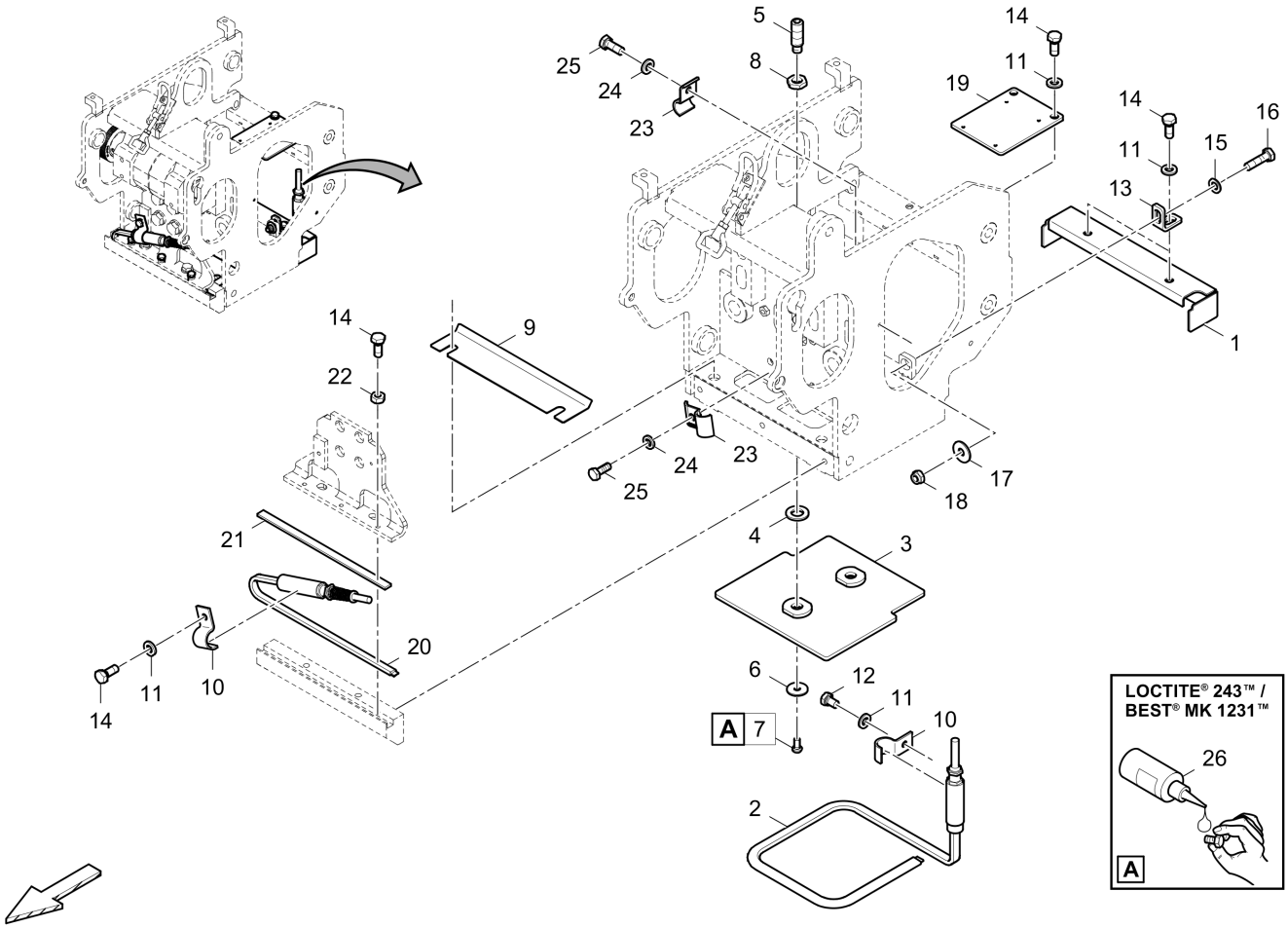

Item	Part No.	Name	Qty	L	C	SN INFO
1	4812014142	Cover	1			
2	4812060501	Flat tube heater	1			
3	4812014156	Clamping plate	1			
4	0301235800	Plain washer	2			
5	4812019777	Adjusting screw	2			
6	0300013047	Flat washer	2			
7	0215000621	Flat headed screw	2			
8	0261211400	Hexagon nut	2			
9	4812014146	Cover plate	1			
10	4812012673	Pipe clamp	2			
11	0333310050	Lock washer	6			
12	0147132003	Hex. head screw	1			
13	4812013947	Fixing angle	2			
14	0147132303	Hexagon bolt	8			
15	0301233500	Plain washer	2			
16	0147132603	Hexagon head screw	2			

Item	Part No.	Name	Qty	L	C	SN INFO
17	D939570014	Washer	2			
18	0291118802	Hexagon nut	2			
19	4812072049	Retainer	1			
20	4812060500	Flat tube heater	1			
21	4812014135	Flat steel	1			
22	0266211000	Hexagon nut	3			
23	4812071229	Pipe clamp	2			
24	0333310055	Washer	2			
25	0147124403	Screw	2			
26	D930290215	Sealant	1			

Referenced Pages

4812239662 Tamper, l.h. 58

Referenced Pages

4812239660 Tamper drive, l.h. 56

Electric 4812018013 Electric

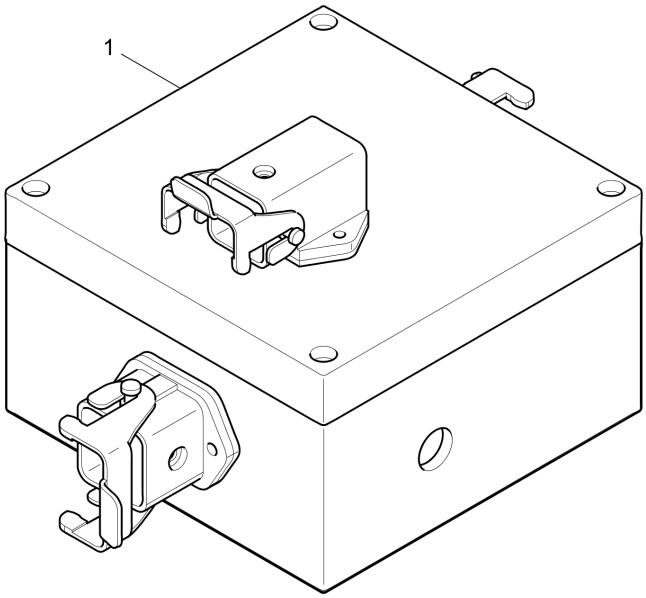

Item	Part No.	Name	Qty	L	C	SN INFO
1	4812017963	Housing	1			

Housing ATL 4812017963 Housing ATL

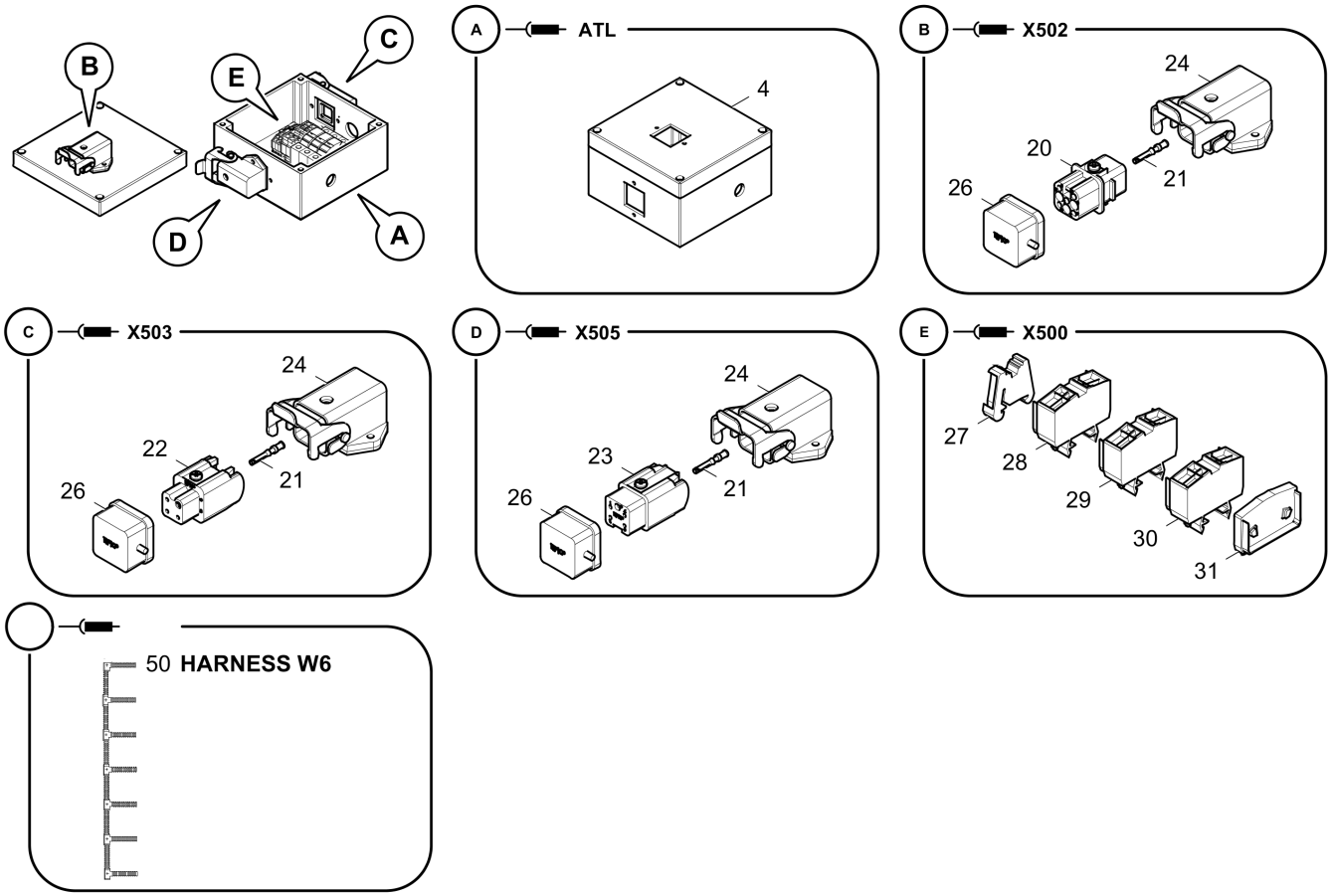

Item	Part No.	Name	Qty	L	C	SN INFO
4	4812018607	Junction box	1			
20	D977463177	Insert	1			
21	D977463107	Female contact	7			
22	D977463153	Insert	1			
23	D977463175	Socket contact	1			
24	D977463154	Mounting box	3			
26	D977478247	Dust cap	3			
27	D977425123	End clamp	2			
28	D977425117	Through clamp	3			
29	D977425119	Through clamp	1			
30	D977425118	Through clamp	1			
31	D977425121	End plate	1			
50	4812012881	Harness W6	1			

Harness W6 4812012881 Harness W6

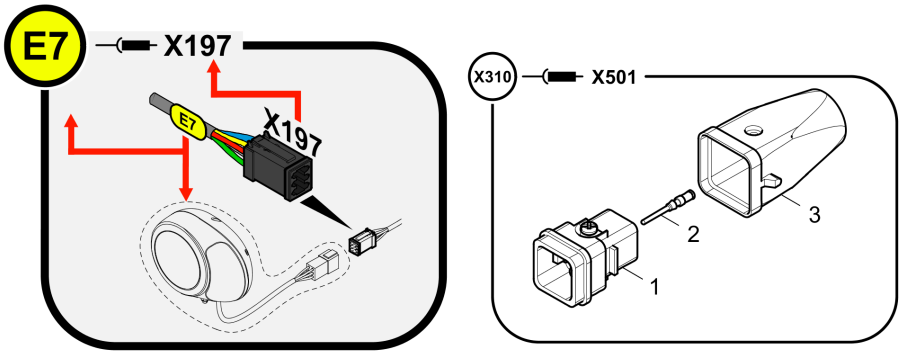

Item	Part No.	Name	Qty	L	C	SN INFO
1	D977463176	Plug insert	1			
2	D977463117	Male contact	7			
3	4812045618	Socket shell	1			

Extension mount, r.h. 4812072161 Extension mount, r.h.

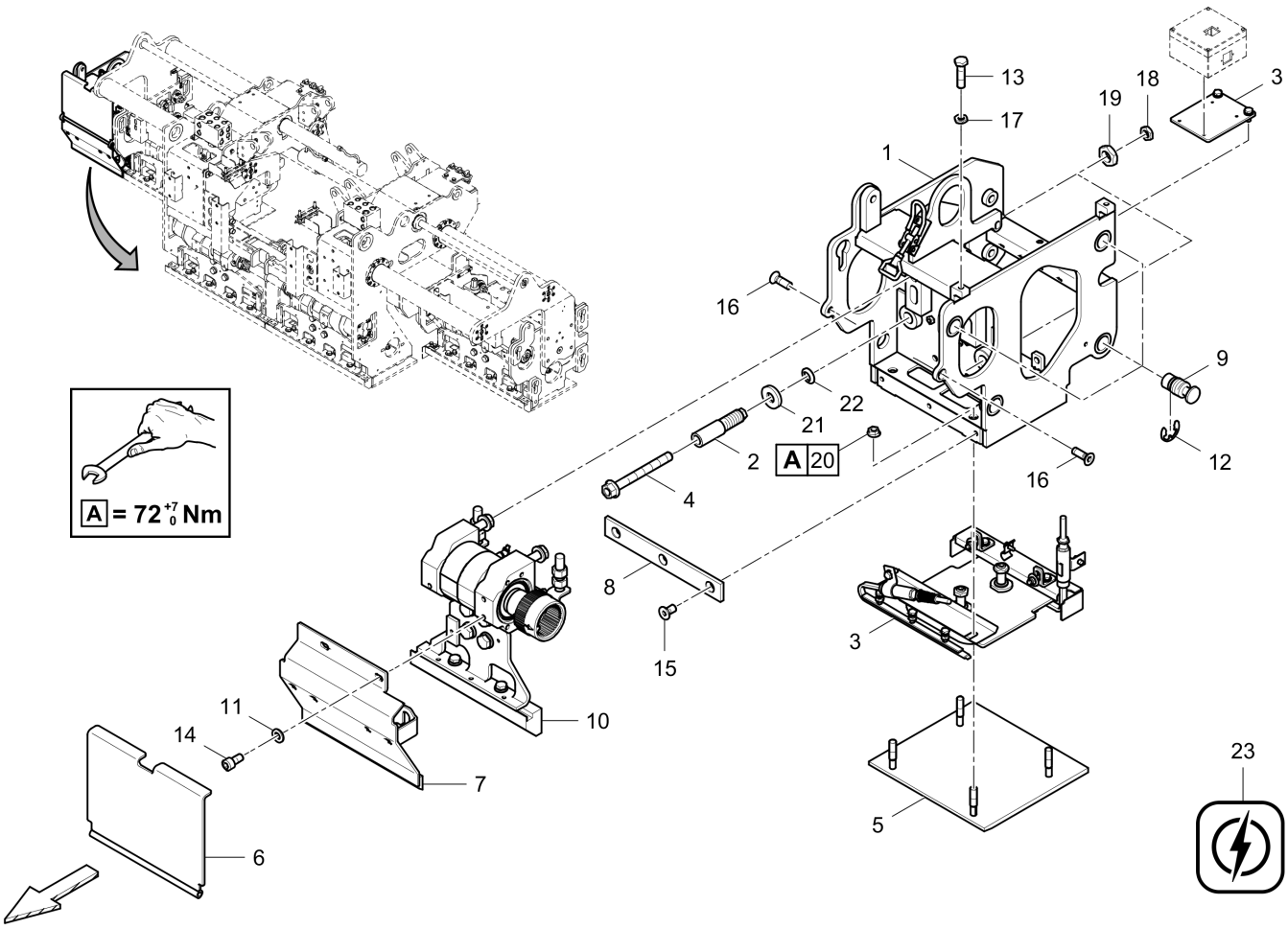

Item	Part No.	Name	Qty	L	C	SN INFO
1	4812061697	Extension mount, r.h.	1			
2	4812200922	Adjusting screw	2			
3	4812061736	Electric heating	1			
4	4812014416	Threaded pin	2			
5	4812236794	Screed plate	1			
6	4812023490	Guard plate	1			
7	4812061727	Guard plate, below, r.h.	1			
8	4812012854	Wear plate	1			
9	4812014188	Draw spindle	4			
10	4812239661	Tamper drive, r.h.	1			
11	0333310051	Lock washer	2			
12	0335311300	Lock washer	4			
13	0147196264	Bolt	2			
14	0147136003	Screw cap	2			
15	0216110056	Countersunk screw	3			
16	0216110016	Countersunk screw	2			

Item	Part No.	Name	Qty	L	C	SN INFO
17	0261211100	Hex.nut-M10	2			
18	0261211400	Hexagon nut	2			
19	0261109941	Hexagon nut	2			
20	0261109156	Tensilock nut	4			
21	D930284510	Conical washer	2			
22	D930298317	Washer	2			
23	4812018026	Electric	1			

Referenced Pages

4812061736 Electric heating 103

Referenced Pages

4812239663 Tamper, r.h. 67

Referenced Pages

4812239661 Tamper drive, r.h. 65

Electric 4812018026 Electric

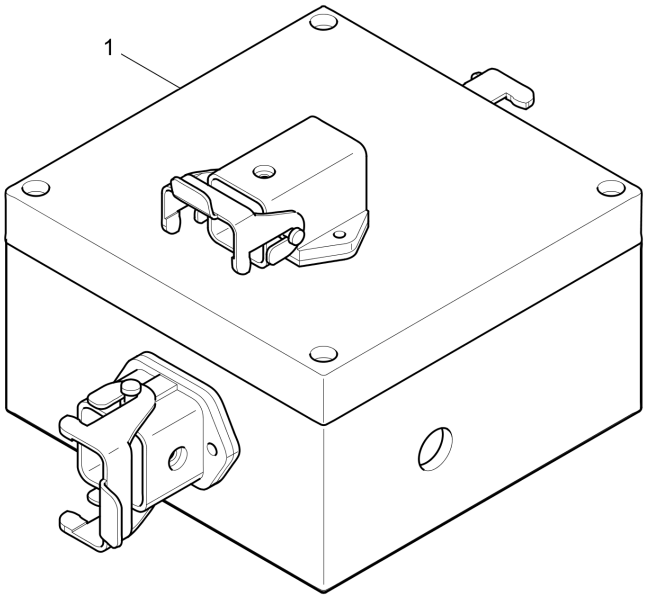

Item	Part No.	Name	Qty	L	C	SN INFO
1	4812017964	Housing ATR	1			

Housing ATR 4812017964 Housing ATR

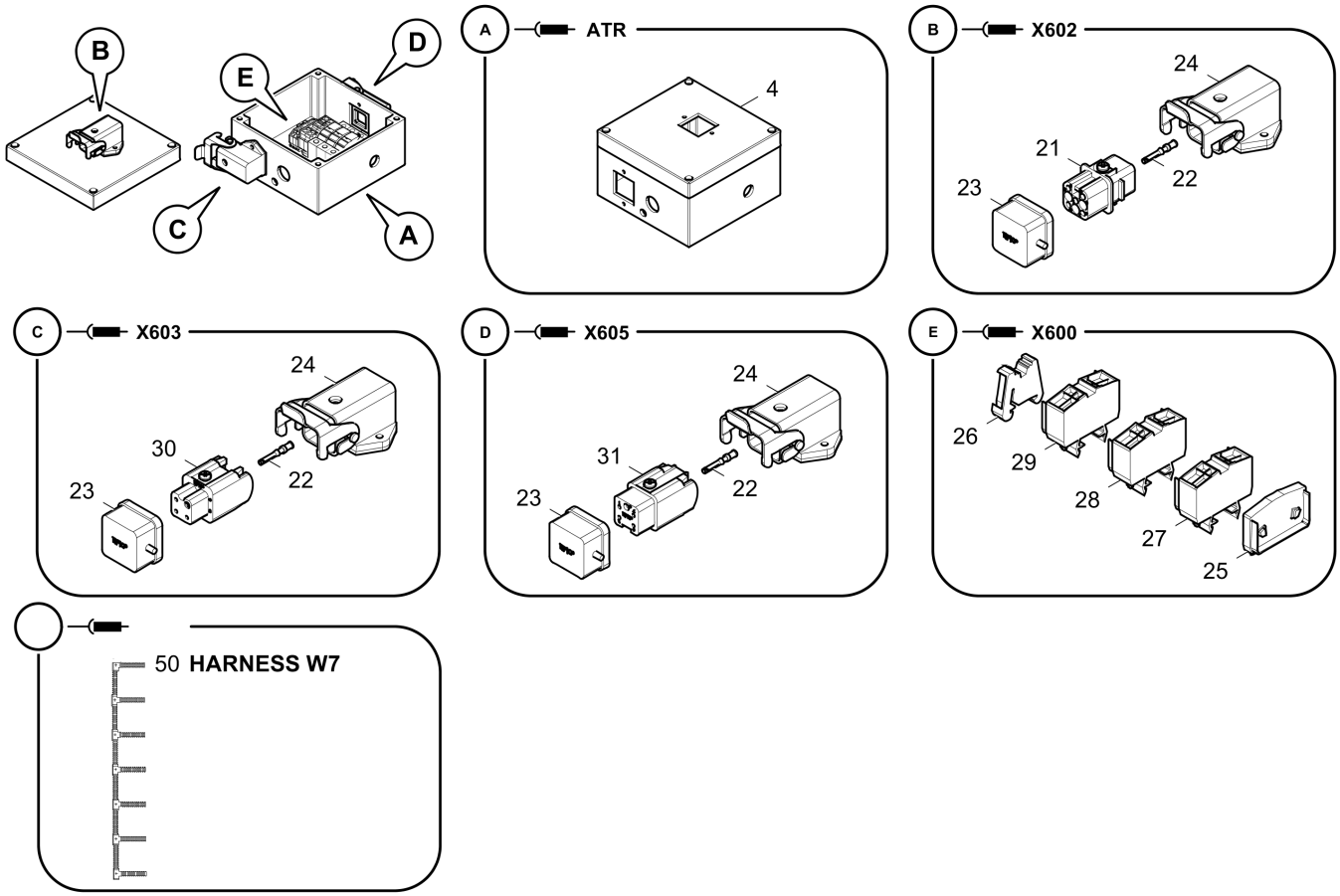

Item	Part No.	Name	Qty	L	C	SN INFO
4	4812018608	Junction box	1			
21	D977463177	Insert	1			
22	D977463107	Female contact	7			
23	D977478247	Dust cap	3			
24	D977463154	Mounting box	3			
25	D977425121	End plate	1			
26	D977425123	End clamp	2			
27	D977425118	Through clamp	1			
28	D977425119	Through clamp	1			
29	D977425117	Through clamp	3			
30	D977463153	Insert	1			
31	D977463175	Socket contact	1			
50	4812012882	Harness W7	1			

Harness W7 4812012882 Harness W7

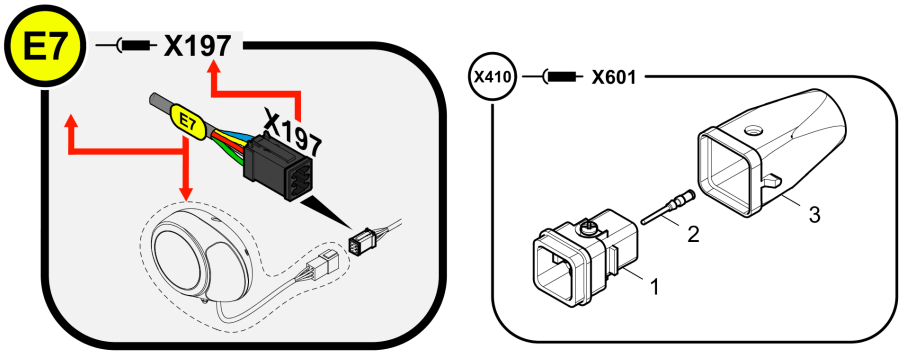

Item	Part No.	Name	Qty	L	C	SN INFO
1	D977463176	Plug insert	1			
2	D977463117	Male contact	7			
3	4812045618	Socket shell	1			

Operation width, 3.50m 4812071766 Operation width, 3.50m

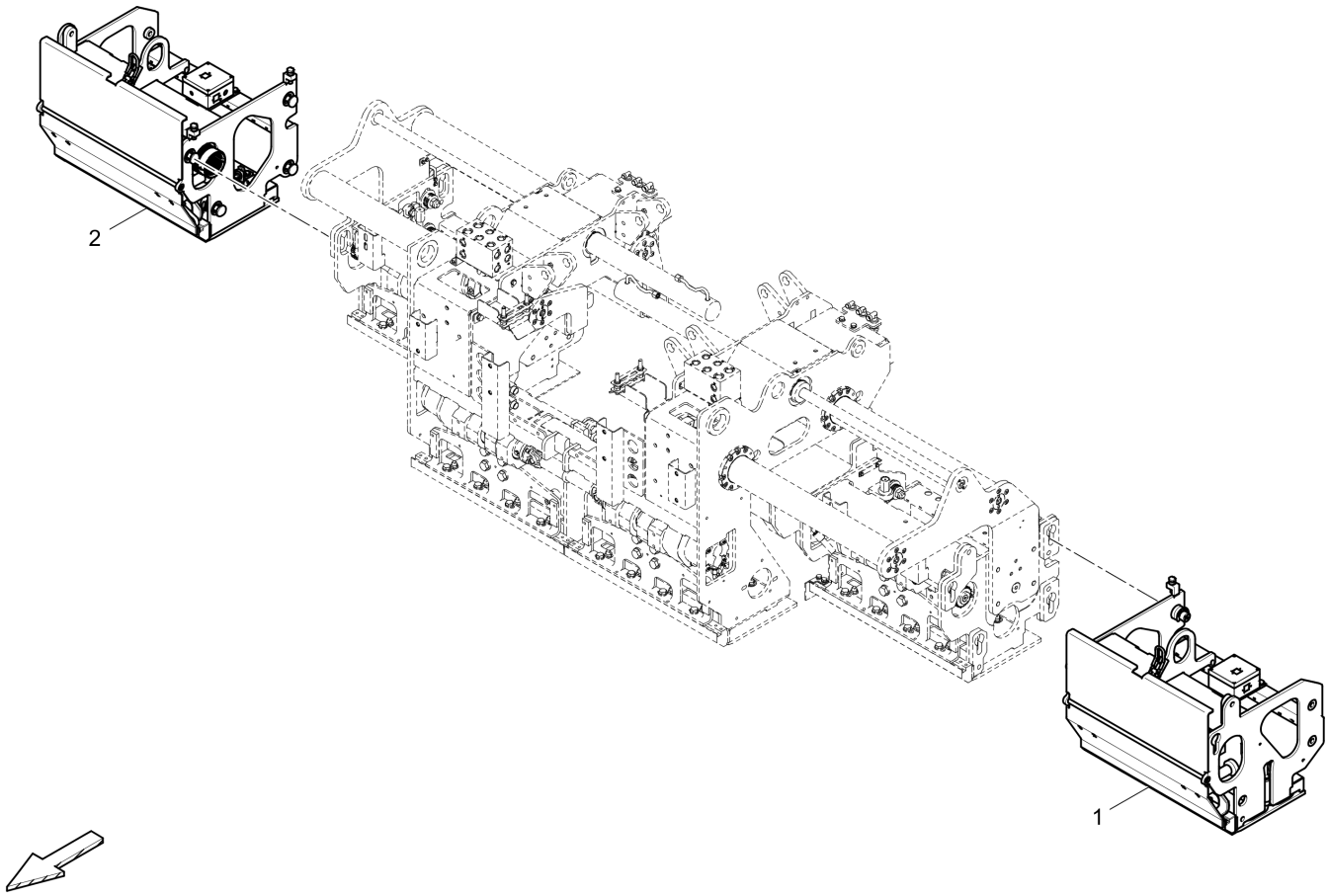

Item	Part No.	Name	Qty	L	C	SN INFO
1	4812071767	Extension mount, l.h.	1			
2	4812071768	Extension mount, r.h.	1			

Extension mount, l.h. 4812071767 Extension mount, l.h.

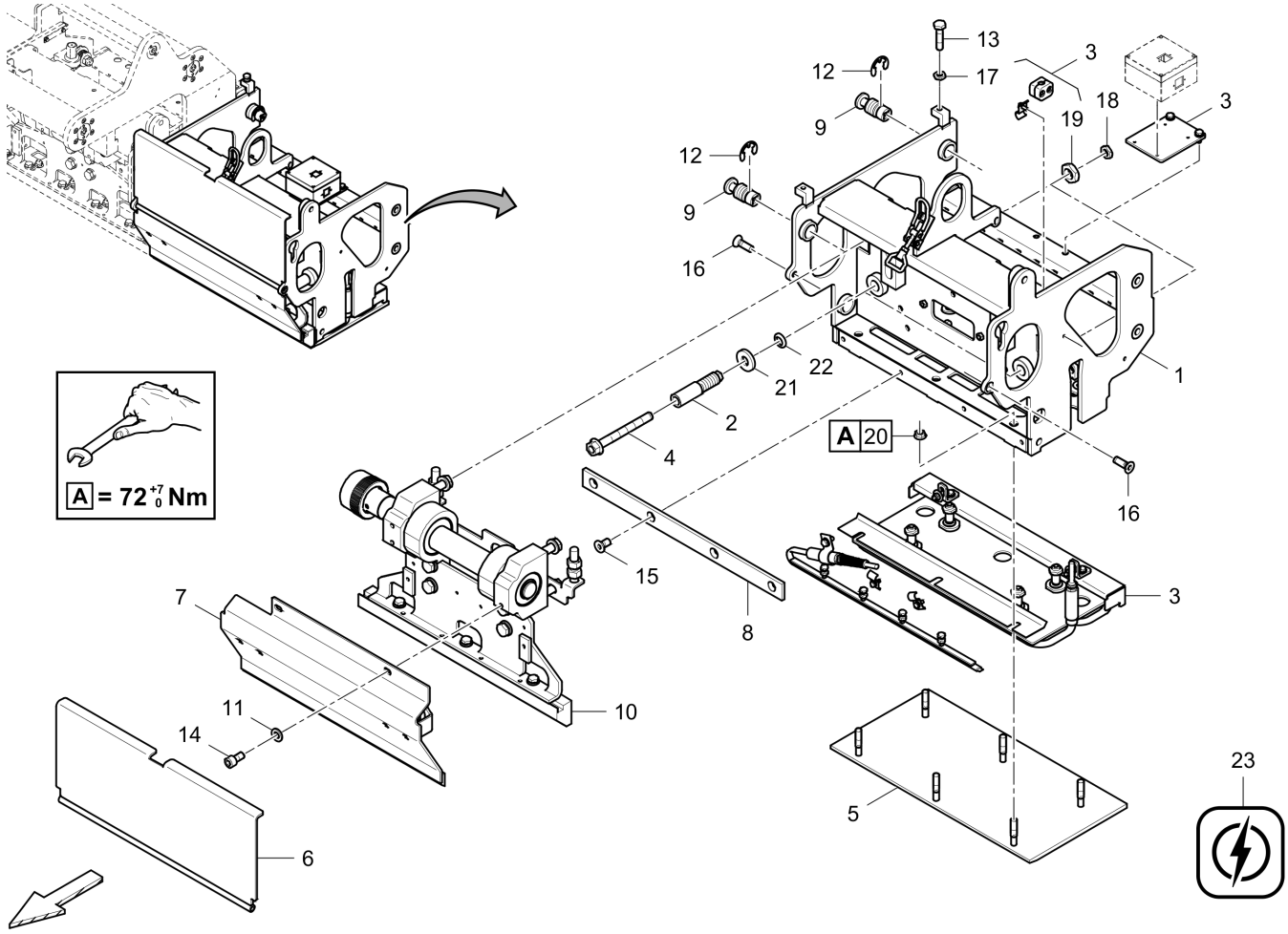

Item	Part No.	Name	Qty	L	C	SN INFO
1	4812071784	Extension mount, l.h.	1			
2	4812200922	Adjusting screw	2			
3	4812071769	Electric heating, l.h.	1			
4	4812014416	Threaded pin	2			
5	4812236584	Screed plate	1			
6	4812236587	Guard plate, above	1			
7	4812071776	Guard plate, below	1			
8	4812236586	Wear plate	1			
9	4812014188	Draw spindle	4			
10	4812071771	Tamper drive, l.h.	1			
11	0333310051	Lock washer	2			
12	0335311300	Lock washer	4			
13	0147196264	Bolt	2			
14	0147136003	Screw cap	2			
15	0216110056	Countersunk screw	4			
16	0216110016	Countersunk screw	2			

Item	Part No.	Name	Qty	L	C	SN INFO
17	0261211100	Hex.nut-M10	2			
18	0261211400	Hexagon nut	2			
19	0261109941	Hexagon nut	2			
20	0261109156	Tensilock nut	6			
21	D930284510	Conical washer	2			
22	D930298317	Washer	2			
23	4812012885	Electric housing ATL	1			

Electric heating, l.h. 4812071769 Electric heating, l.h.

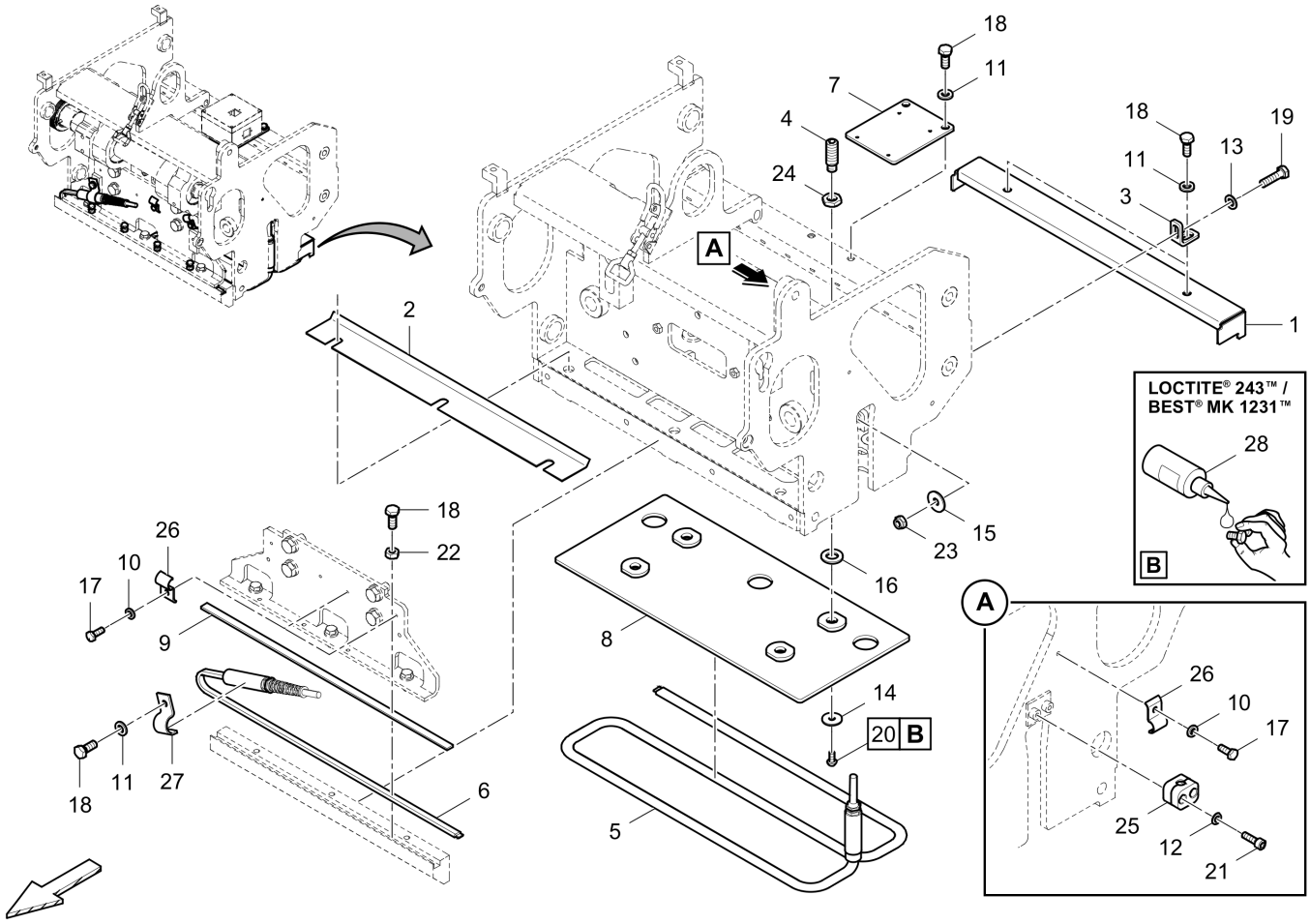

Item	Part No.	Name	Qty	L	C	SN INFO
1	4812236835	Cover	1			
2	4812236776	Cover plate	1			
3	4812013947	Fixing angle	2			
4	4812019777	Adjusting screw	4			
5	4812217584	Heating rod, l.h.	1			
6	4812217586	Heating rod f. tamper	1			
7	4812072049	Retainer	1			
8	4812236781	Clamping plate	1			
9	4812236796	Flat steel	1			
10	0333310055	Washer	3			
11	0333310050	Lock washer	5			
12	0300013026	Flat washer	2			
13	0301233500	Plain washer	2			
14	0300013047	Flat washer	4			
15	D939570014	Washer	2			
16	0301235800	Plain washer	4			

Item	Part No.	Name	Qty	L	C	SN INFO
17	0147124403	Screw	3			
18	0147132303	Hexagon bolt	9			
19	0147132603	Hexagon head screw	2			
20	0215000621	Flat headed screw	4			
21	0211124703	Hex sock. screw	2			
22	0266211000	Hexagon nut	4			
23	0291118802	Hexagon nut	2			
24	0261211400	Hexagon nut	4			
25	4749300518	Clamp	1			
26	4812071229	Pipe clamp	3			
27	4812012673	Pipe clamp	1			
28	D930290215	Sealant	1			

Referenced Pages

4812071772 Tamper, l.h. 76

Referenced Pages

4812071771 Tamper drive, l.h. 75

Electric housing ATL 4812012885 Electric housing ATL

Item	Part No.	Name	Qty	L	C	SN INFO
1	4812013261	Electric housing ATL	1			

Electric housing ATL 4812013261 Electric housing ATL

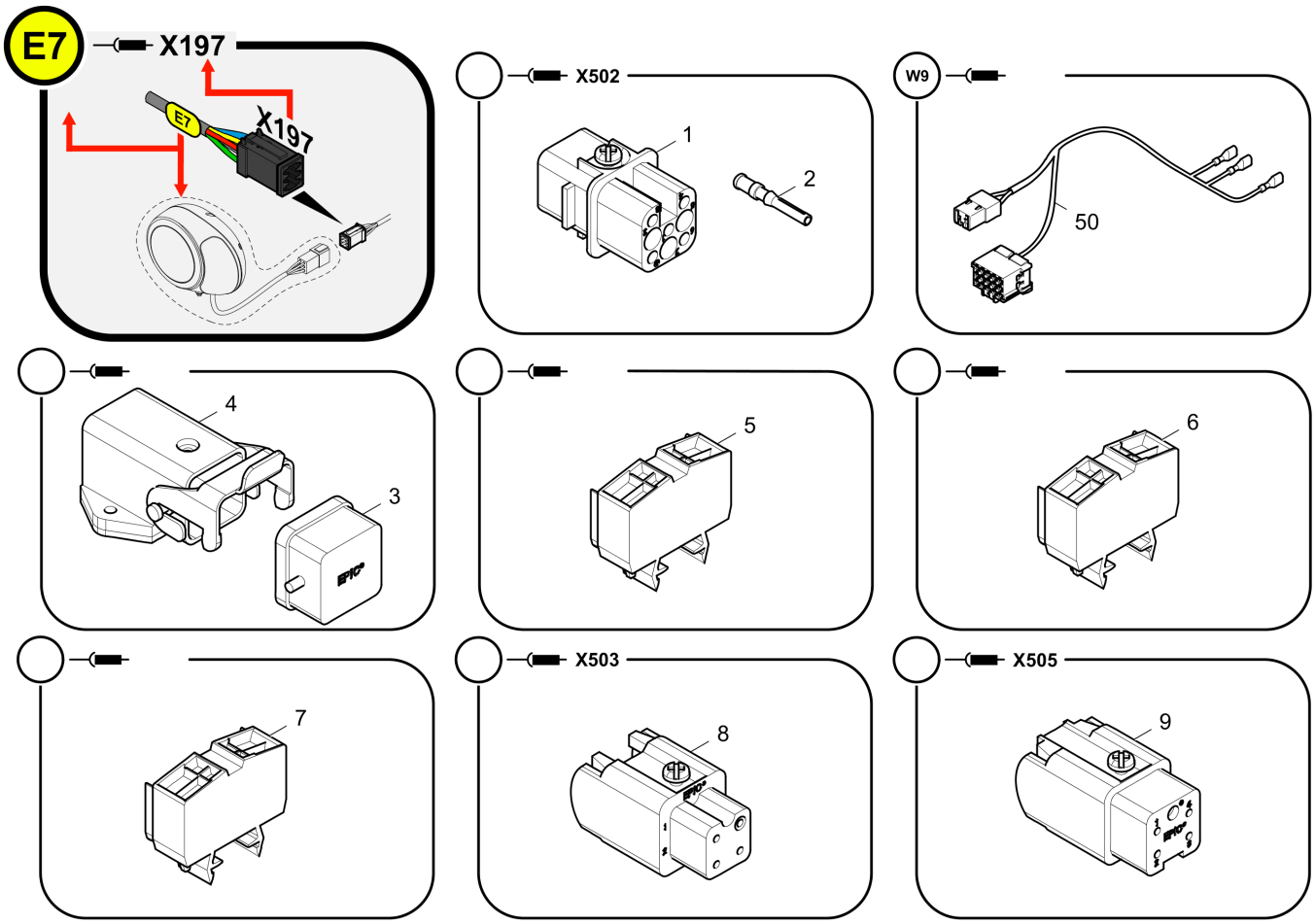

Item	Part No.	Name	Qty	L	C	SN INFO
1	D977463177	Insert	1			
2	D977463107	Female contact	1			
3	D977478247	Dust cap	1			
4	D977463154	Mounting box	1			
5	D977425118	Through clamp	1			
6	D977425119	Through clamp	1			
7	D977425117	Through clamp	1			
8	D977463153	Insert	1			
9	D977463175	Socket contact	1			
50	4812013262	Harness W9	1			

Harness 4812013262 Harness W9

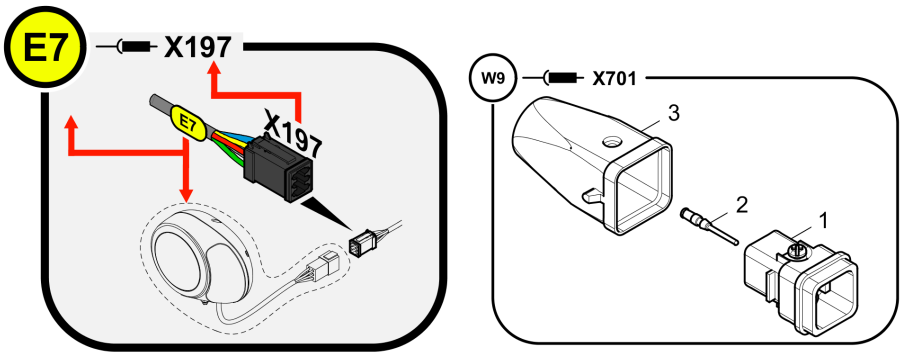

Item	Part No.	Name	Qty	L	C	SN INFO
1	D977463176	Plug insert	1			
2	D977463117	Male contact	1			
3	4812045618	Socket shell	1			

Extension mount, r.h. 4812071768 Extension mount, r.h.

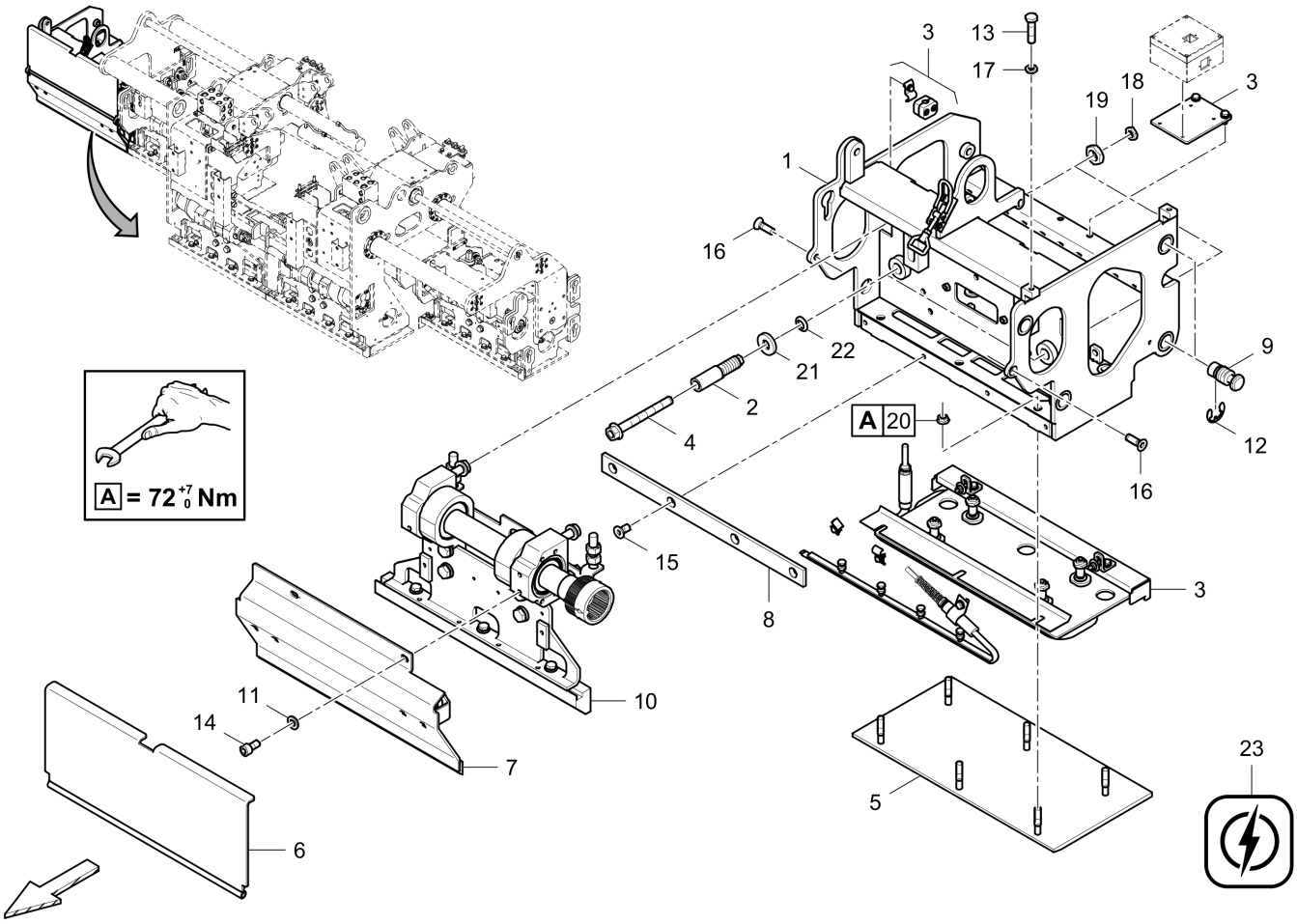

Item	Part No.	Name	Qty	L	C	SN INFO
1	4812071786	Extension mount, r.h.	1			
2	4812200922	Adjusting screw	2			
3	4812071770	Electric heating, r.h.	1			
4	4812014416	Threaded pin	2			
5	4812236584	Screed plate	1			
6	4812236587	Guard plate, above	1			
7	4812071780	Guard plate, below	1			
8	4812236586	Wear plate	1			
9	4812014188	Draw spindle	4			
10	4812071774	Tamper drive, r.h.	1			
11	0333310051	Lock washer	2			
12	0335311300	Lock washer	4			
13	0147196264	Bolt	2			
14	0147136003	Screw cap	2			
15	0216110056	Countersunk screw	4			
16	0216110016	Countersunk screw	2			

Item	Part No.	Name	Qty	L	C	SN INFO
17	0261211100	Hex.nut-M10	2			
18	0261211400	Hexagon nut	2			
19	0261109941	Hexagon nut	2			
20	0261109156	Tensilock nut	6			
21	D930284510	Conical washer	2			
22	D930298317	Washer	2			
23	4812012886	Electric housing ATR	1			

Electric heating, r.h. 4812071770 Electric heating, r.h.

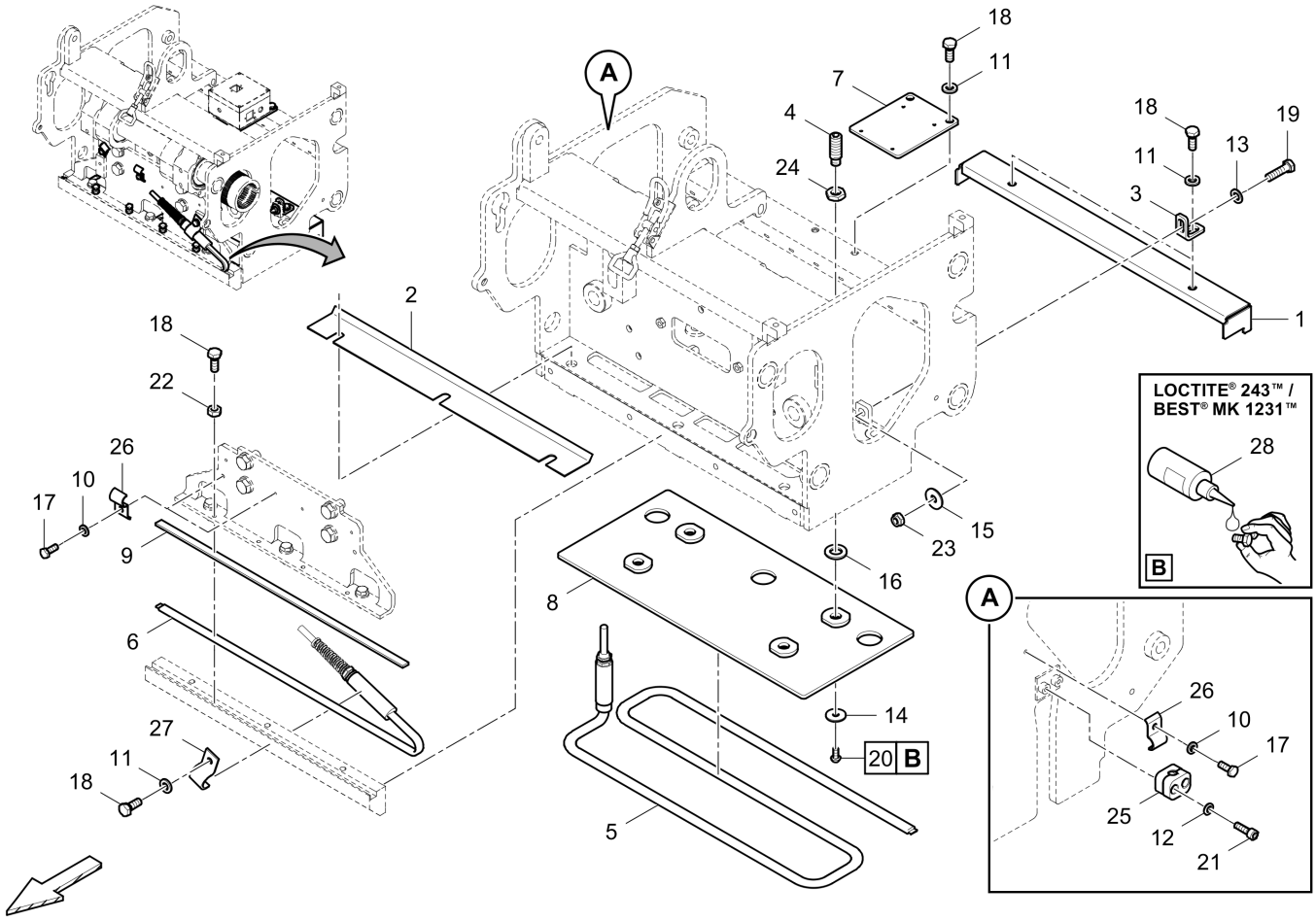

Item	Part No.	Name	Qty	L	C	SN INFO
1	4812236835	Cover	1			
2	4812236776	Cover plate	1			
3	4812013947	Fixing angle	2			
4	4812019777	Adjusting screw	4			
5	4812217585	Heating rod, r.h.	1			
6	4812217586	Heating rod f. tamper	1			
7	4812072049	Retainer	1			
8	4812236781	Clamping plate	1			
9	4812236796	Flat steel	1			
10	0333310055	Washer	3			
11	0333310050	Lock washer	5			
12	0300013026	Flat washer	2			
13	0301233500	Plain washer	2			
14	0300013047	Flat washer	4			
15	D939570014	Washer	2			
16	0301235800	Plain washer	4			

Item	Part No.	Name	Qty	L	C	SN INFO
17	0147124403	Screw	3			
18	0147132303	Hexagon bolt	9			
19	0147132603	Hexagon head screw	2			
20	0215000621	Flat headed screw	4			
21	0211124703	Hex sock. screw	2			
22	0266211000	Hexagon nut	4			
23	0291118802	Hexagon nut	2			
24	0261211400	Hexagon nut	4			
25	4749300518	Clamp	1			
26	4812071229	Pipe clamp	3			
27	4812012673	Pipe clamp	1			
28	D930290215	Sealant	1			

Tamper drive, r.h. 4812071774 Tamper drive, r.h.

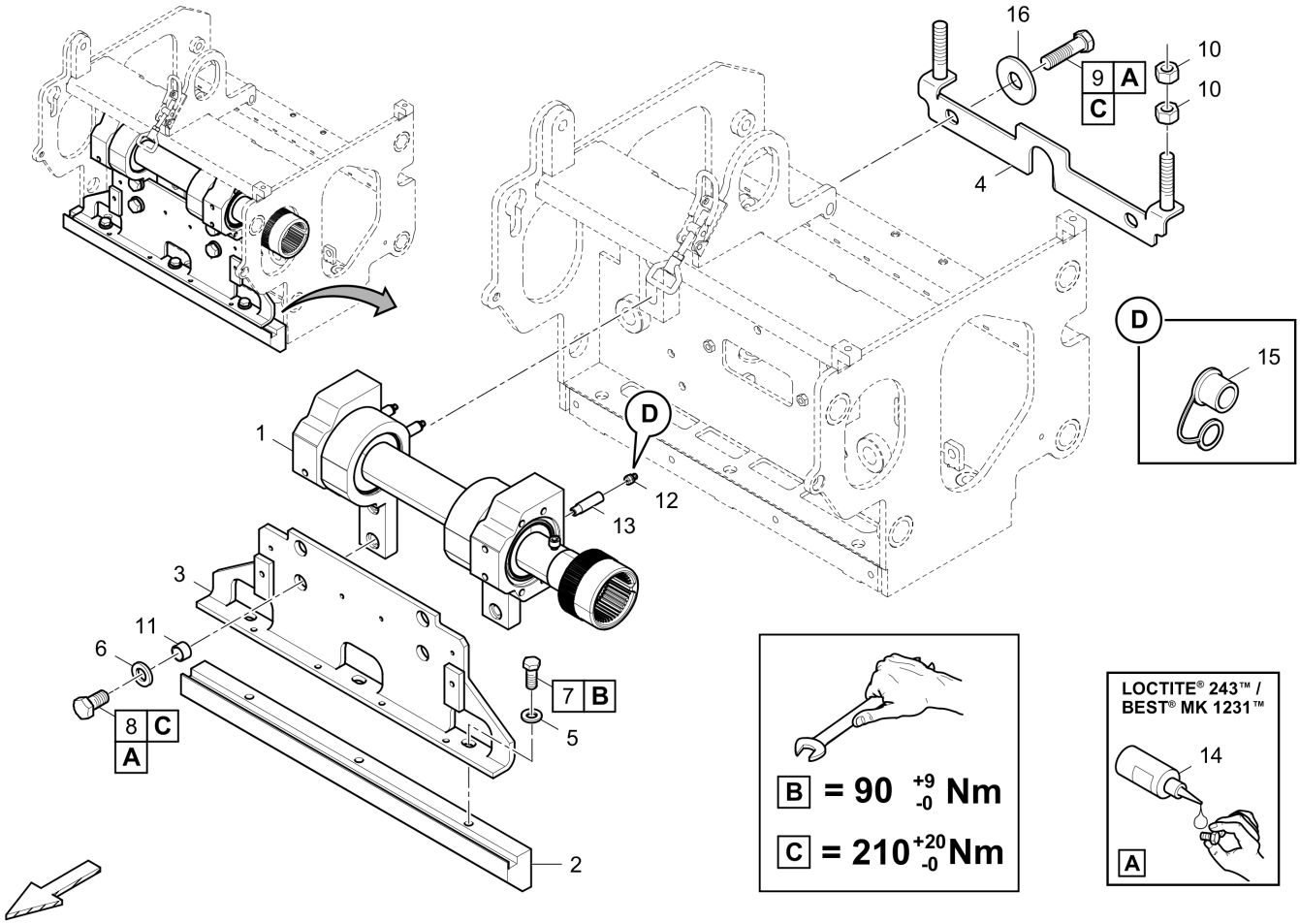

Item	Part No.	Name	Qty	L	C	SN INFO
1	4812071775	Tamper, r.h.	1			
2	4812064057	Tamper bar	1			
3	4812215647	Tamper frame	1			
4	4812236607	Brace	1			
5	0333310052	Flat washer	3			
6	0333310049	Lock washer	4			
7	0147140103	Screw	3			
8	0147147503	Hex bolt	4			
9	0147148203	Hex. head screw M16 x 65	4			
10	0266211400	Hexagon nut M16	4			
11	4749302339	Bushing	4			
12	D935511210	Grease nipple	4			
13	4812073787	Adapter	4			
14	D930290215	Sealant	1			
15	4812011219	Protection cap	4			
16	4749900538	Washer	4			

Tamper, r.h. 4812071775 Tamper, r.h.

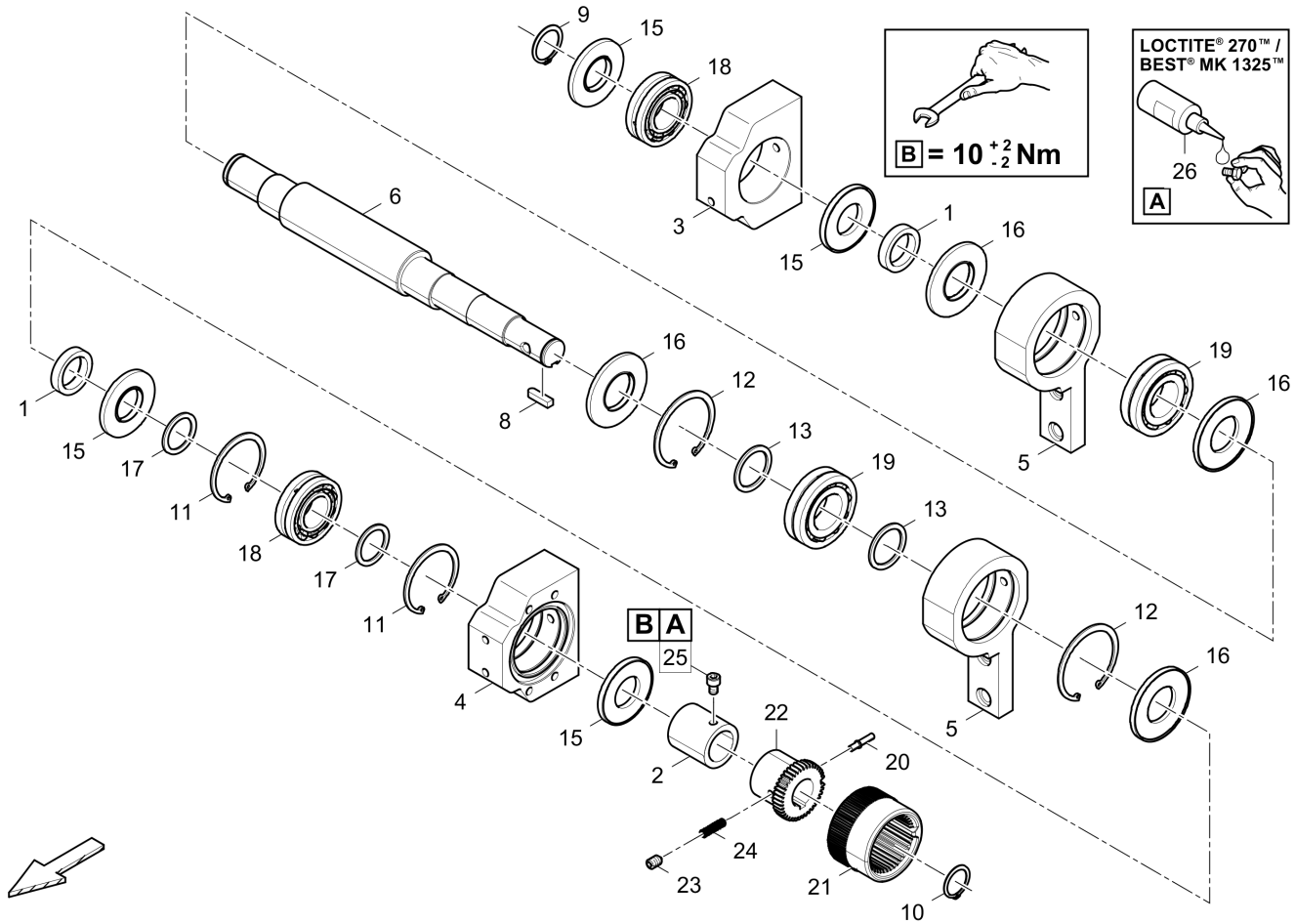

Item	Part No.	Name	Qty	L	C	SN INFO
1	4812013285	Spacer	2			
2	4812216041	Spacer	1			
3	4812013251	Bearing support	1			
4	4812013278	Bearing support	1			
5	4812012754	Rocker assy	2			
6	4812071773	Tamper shaft	1			
8	D931720739	Feather key	1			
9	0335113600	Snap ring	1			
10	D936001864	Circlip	1			
11	D936029651	Circlip	2			
12	4749900351	Circlip	2			
13	0324155159	Supporting washer	2			
15	4812019069	Packing	4			
16	4749302735	Sealing moulded product	4			
17	D932120750	Shim washer	2			
18	4812011215	Bearing	2			

Item	Part No.	Name	Qty	L	C	SN INFO
19	4749540044	Bearing	2			
20	4812072259	Shift pin	1			
21	4812072540	Coupling sleeve	1			
22	4812072534	Hub	1			
23	0190124143	Threaded pin	1			
24	4812072541	Compression spring	1			
25	0211132003	Screw	1			
26	4747400056	Thread locking, 50ml	1			

Electric housing ATR 4812012886 Electric housing ATR

Item	Part No.	Name	Qty	L	C	SN INFO
1	4812013263	Electric housing ATR	1			

Electric housing ATR 4812013263 Electric housing ATR

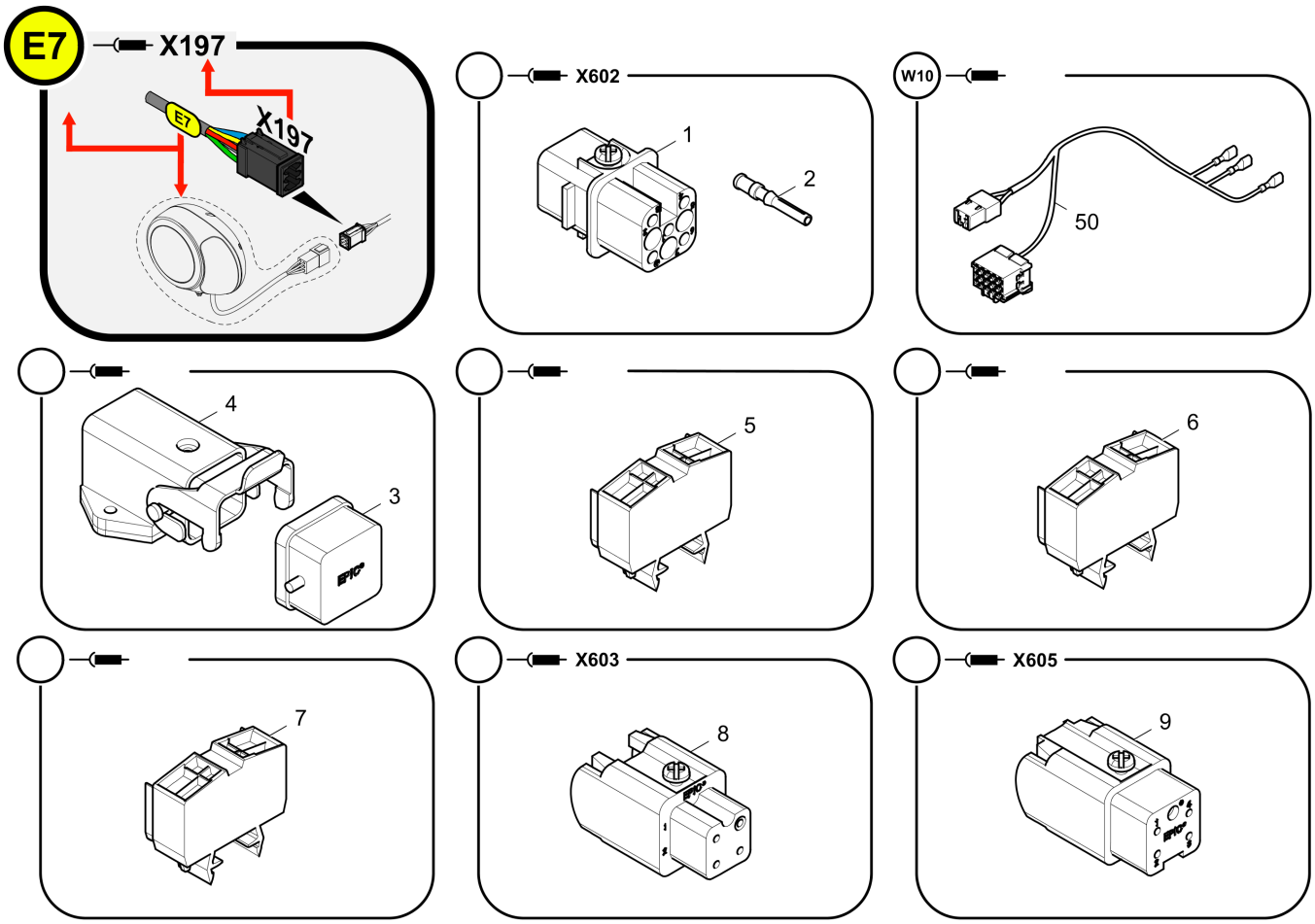

Item	Part No.	Name	Qty	L	C	SN INFO
1	D977463177	Insert	1			
2	D977463107	Female contact	1			
3	D977478247	Dust cap	1			
4	D977463154	Mounting box	1			
5	D977425118	Through clamp	1			
6	D977425119	Through clamp	1			
7	D977425117	Through clamp	1			
8	D977463153	Insert	1			
9	D977463175	Socket contact	1			
50	4812018961	Harness W10	1			

Harness 4812018961 Harness W10

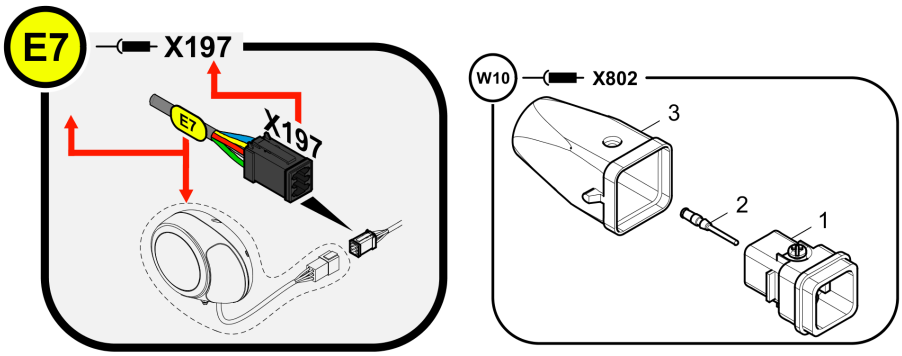

Item	Part No.	Name	Qty	L	C	SN INFO
1	D977463176	Plug insert	1			
2	D977463117	Male contact	1			
3	4812045618	Socket shell	1			

Tamper drive 4812073587 Tamper drive

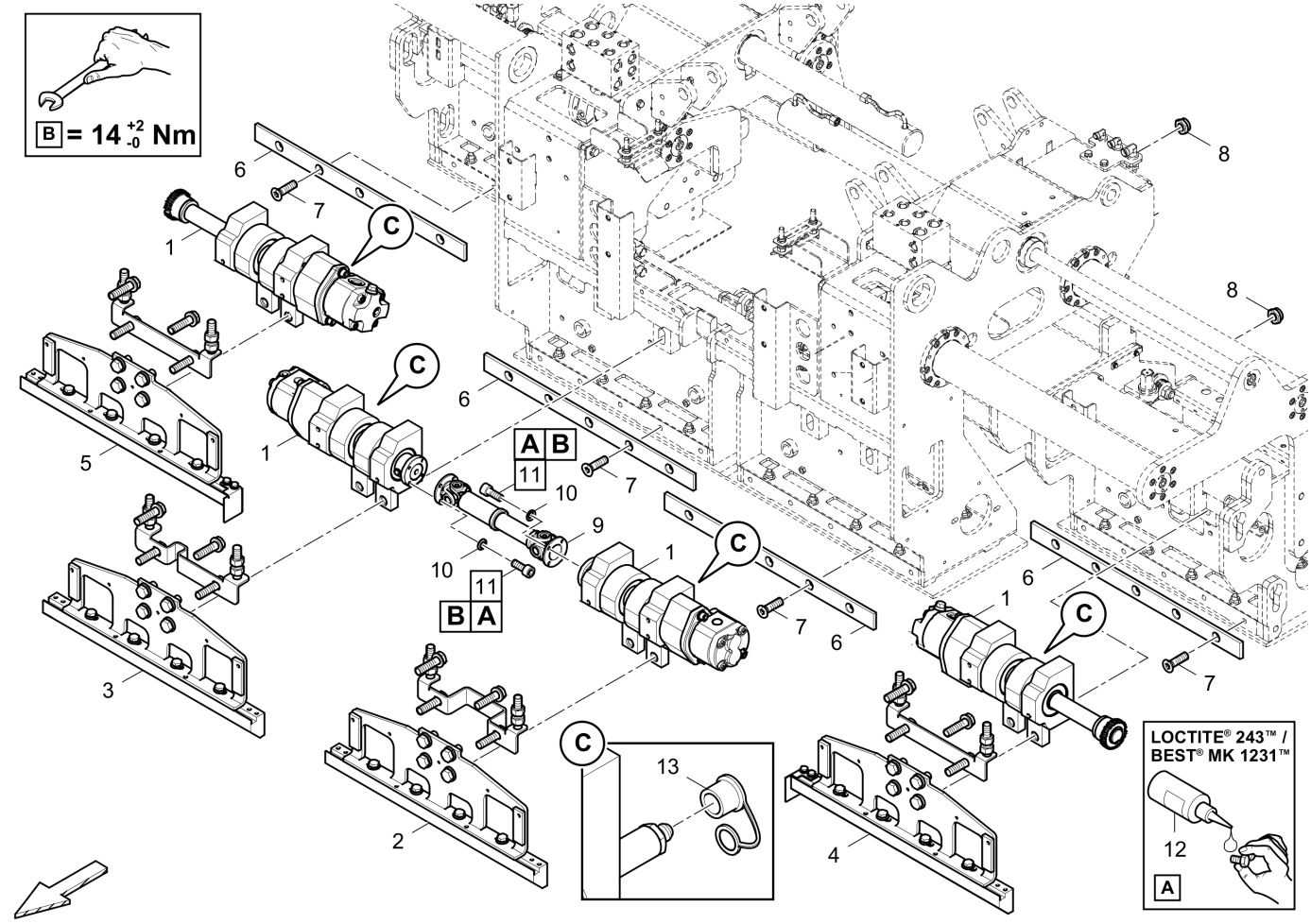

Item	Part No.	Name	Qty	L	C	SN INFO
1	4812073586	Kit, tamper subassembly	1			
2	4812071387	Tamper drive centr. part, l.h.	1			
3	4812071388	Tamper drive centr. part, r.h.	1			
4	4812071389	Tamper drive ext. part, l.h.	1			
5	4812071390	Tamper drive ext. part, r.h.	1			
6	4812014414	Wear plate	4			
7	3370044501	Countersunk screw	20			
8	5541396800	Hexagon nut	20			
9	4749400979	Joint shaft	1			
10	4749901860	Washer	8			
11	D937934223	Screw	8			
12	D930290215	Sealant	1			
13	4812011219	Protection cap	16			

Kit, tamper subassembly 4812073586 Kit, tamper subassembly

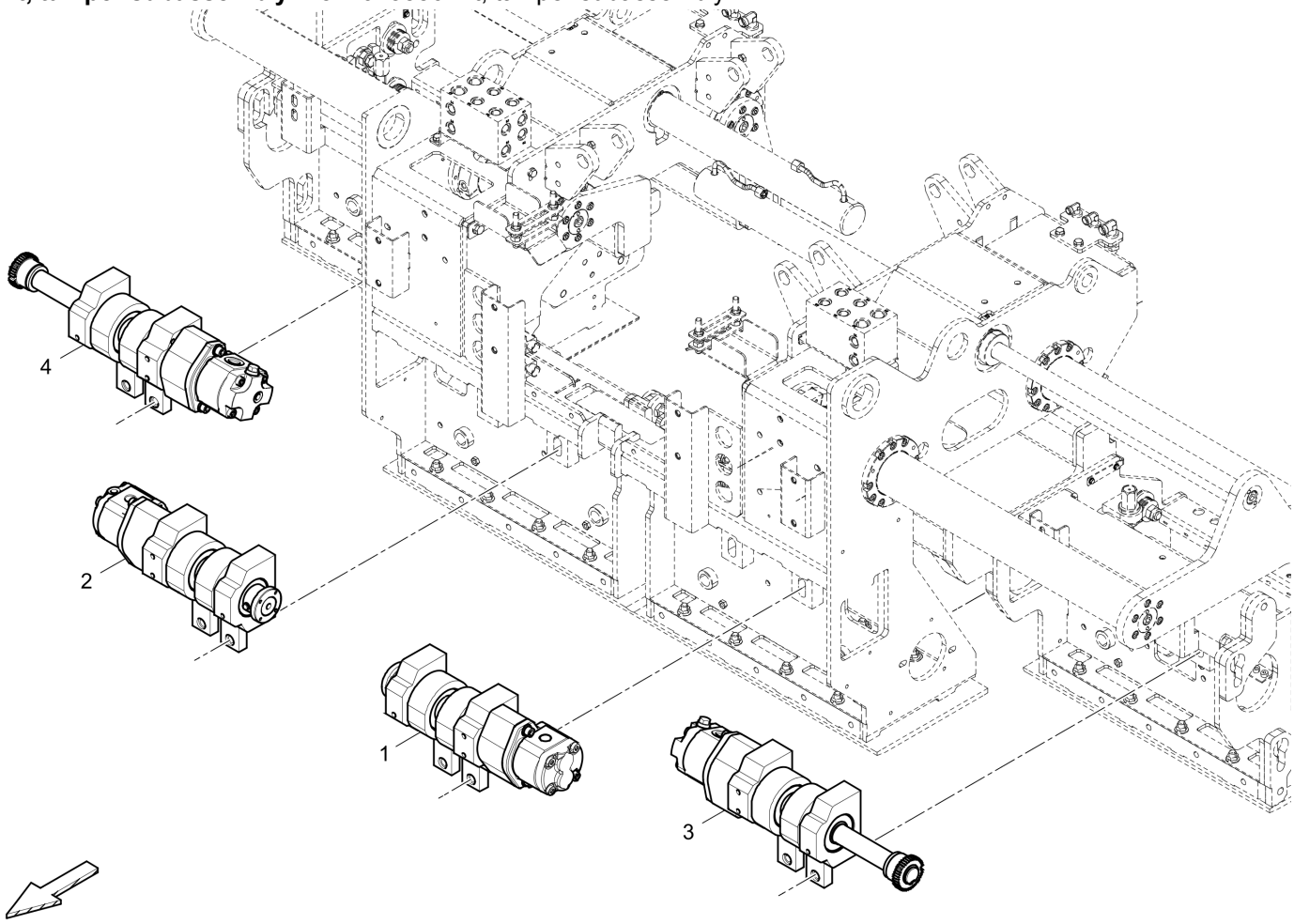

Item	Part No.	Name	Qty	L	C	SN INFO
1	4812073585	Tamper drive, centr. l.h.	1			
2	4812073584	Tamper drive, centr. r.h.	1			
3	4812073583	Tamper drive, ext. l.h.	1			
4	4812073576	Tamper drive, ext. r.h.	1			

Tamper drive, centr. l.h. 4812073585 Tamper drive, centr. l.h.

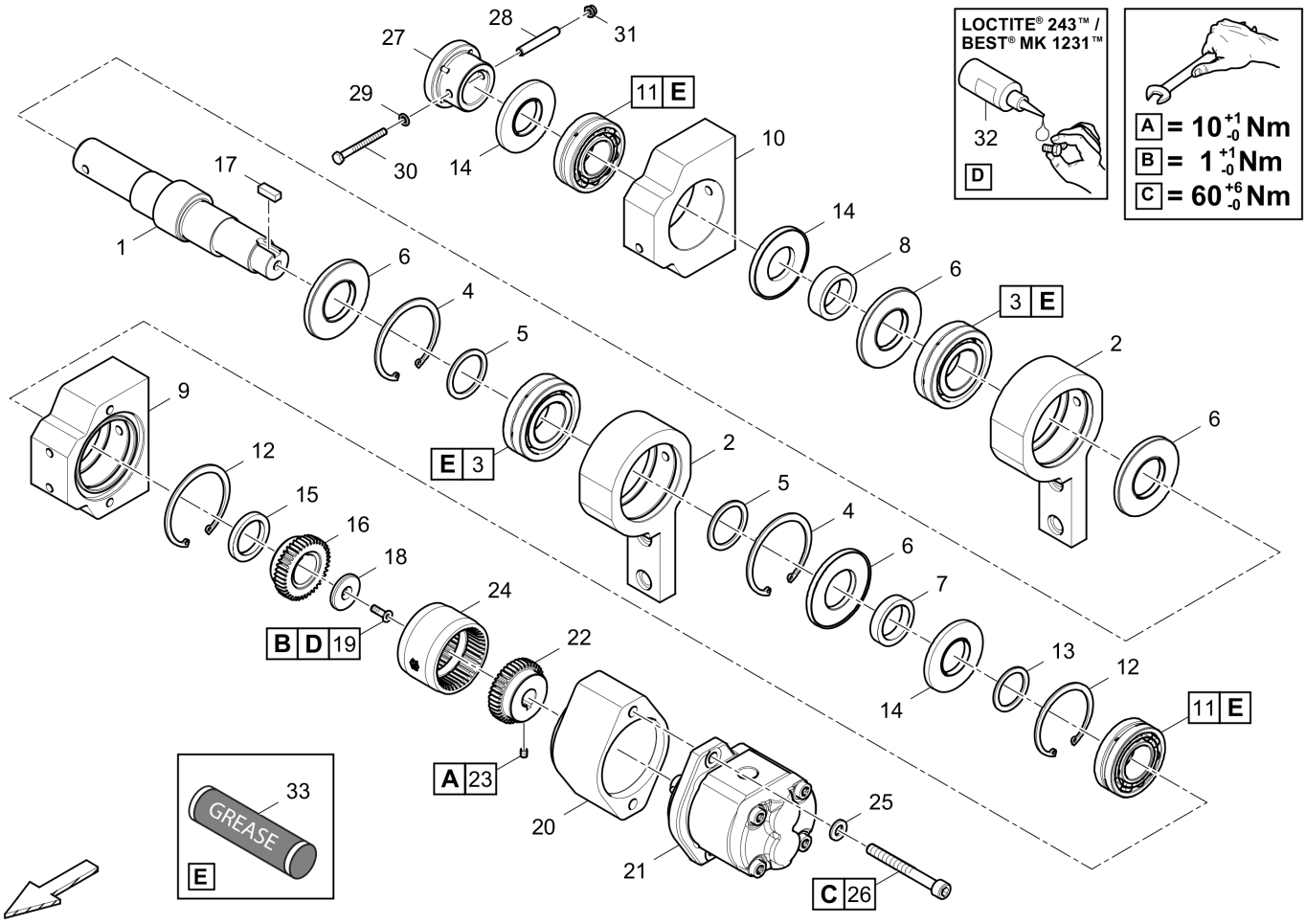

Item	Part No.	Name	Qty	L	C	SN INFO
1	4812073572	Tamper shaft	1			
2	4812012754	Rocker assy	2			
3	4749540044	Bearing	2			
4	4749900351	Circlip	2			
5	0324155159	Supporting washer	2			
6	4749302735	Sealing moulded product	4			
7	4812013285	Spacer	1			
8	4812014111	Spacer	1			
9	4812216660	Bearing support	1			
10	4812013251	Bearing support	1			
11	4812011215	Bearing	2			
12	D936029651	Circlip	2			
13	D932120750	Shim washer	1			
14	4812019069	Packing	3			
15	4812014264	Spacer	1			
16	4812014287	Coupling piece	1			

Item	Part No.	Name	Qty	L	C	SN INFO
17	0337510200	Feather key	1			
18	4812016298	Washer	1			
19	0216195783	Countersunk screw	1			
20	4812227162	Housing	1			
21	4812005518	Gear motor	1			
22	4812013279	Hub	1			
23	4749900612	Threaded pin	1			
24	4812044123	Sleeve	1			
25	0333310051	Lock washer	2			
26	0211110232	Screw	2			
27	4812014484	Flange	1			
28	0108169167	Dowel pin	1			
29	0301232100	Plain washer	1			
30	0147125603	Hex. head screw	1			
31	0291110800	Locknut	1			
32	D930290215	Sealant	1			
33	4812161897	Paver Grease - 1 cartridge	1			

Tamper drive, centr. r.h. 4812073584 Tamper drive, centr. r.h.

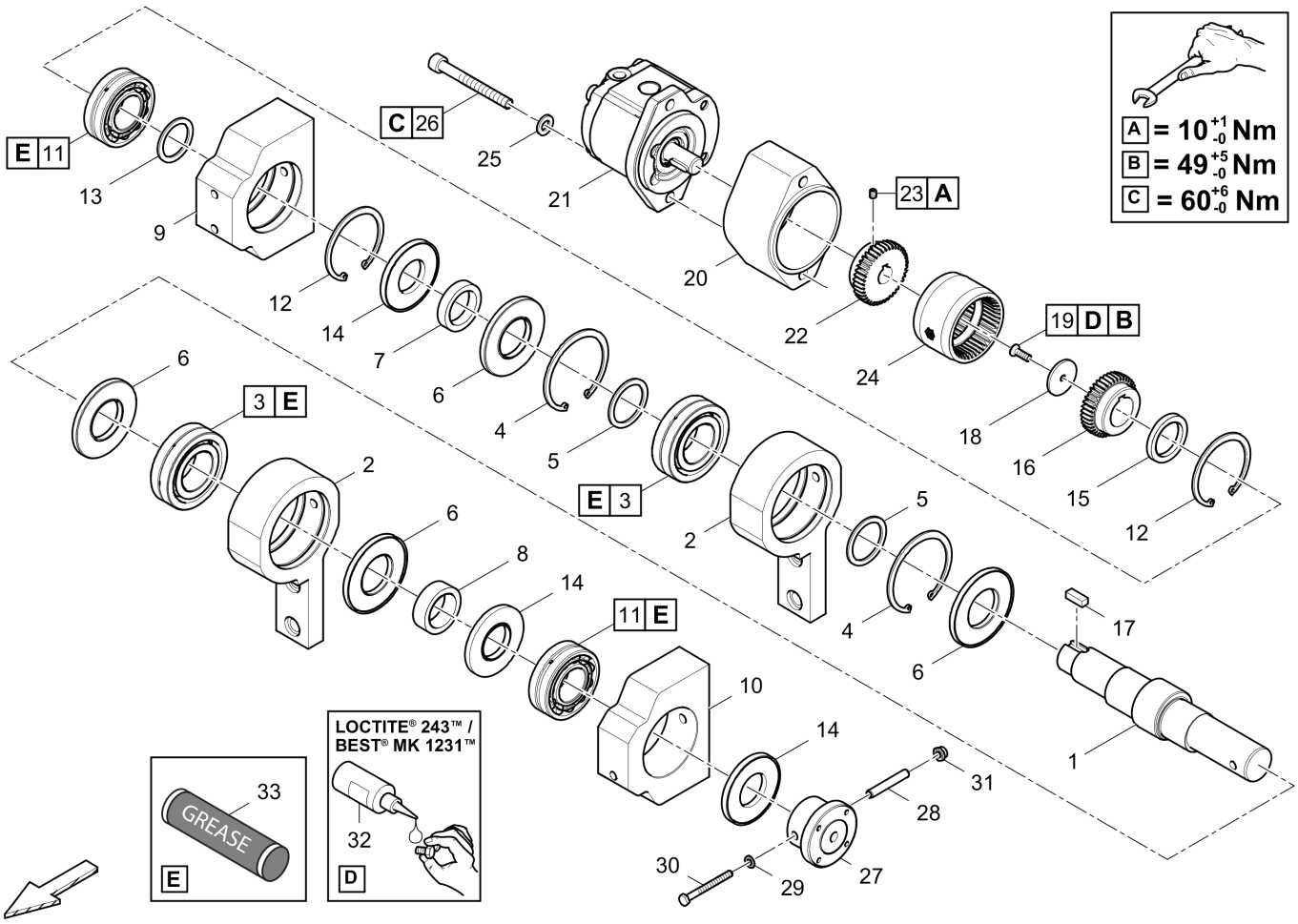

Item	Part No.	Name	Qty	L	C	SN INFO
1	4812073572	Tamper shaft	1			
2	4812012754	Rocker assy	2			
3	4749540044	Bearing	2			
4	4749900351	Circlip	2			
5	0324155159	Supporting washer	2			
6	4749302735	Sealing moulded product	4			
7	4812013285	Spacer	1			
8	4812014111	Spacer	1			
9	4812216660	Bearing support	1			
10	4812013251	Bearing support	1			
11	4812011215	Bearing	2			
12	D936029651	Circlip	2			
13	D932120750	Shim washer	1			
14	4812019069	Packing	3			
15	4812014264	Spacer	1			
16	4812014287	Coupling piece	1			

Item	Part No.	Name	Qty	L	C	SN INFO
17	0337510200	Feather key	1			
18	4812016298	Washer	1			
19	0216195783	Countersunk screw	1			
20	4812227162	Housing	1			
21	4812005518	Gear motor	1			
22	4812013279	Hub	1			
23	4749900612	Threaded pin	1			
24	4812044123	Sleeve	1			
25	0333310051	Lock washer	2			
26	0211110232	Screw	2			
27	4812014484	Flange	1			
28	0108169167	Dowel pin	1			
29	0301232100	Plain washer	1			
30	0147125603	Hex. head screw	1			
31	0291110800	Locknut	1			
32	D930290215	Sealant	1			
33	4812161897	Paver Grease - 1 cartridge	1			

Tamper drive, ext. l.h. 4812073583 Tamper drive, ext. l.h.

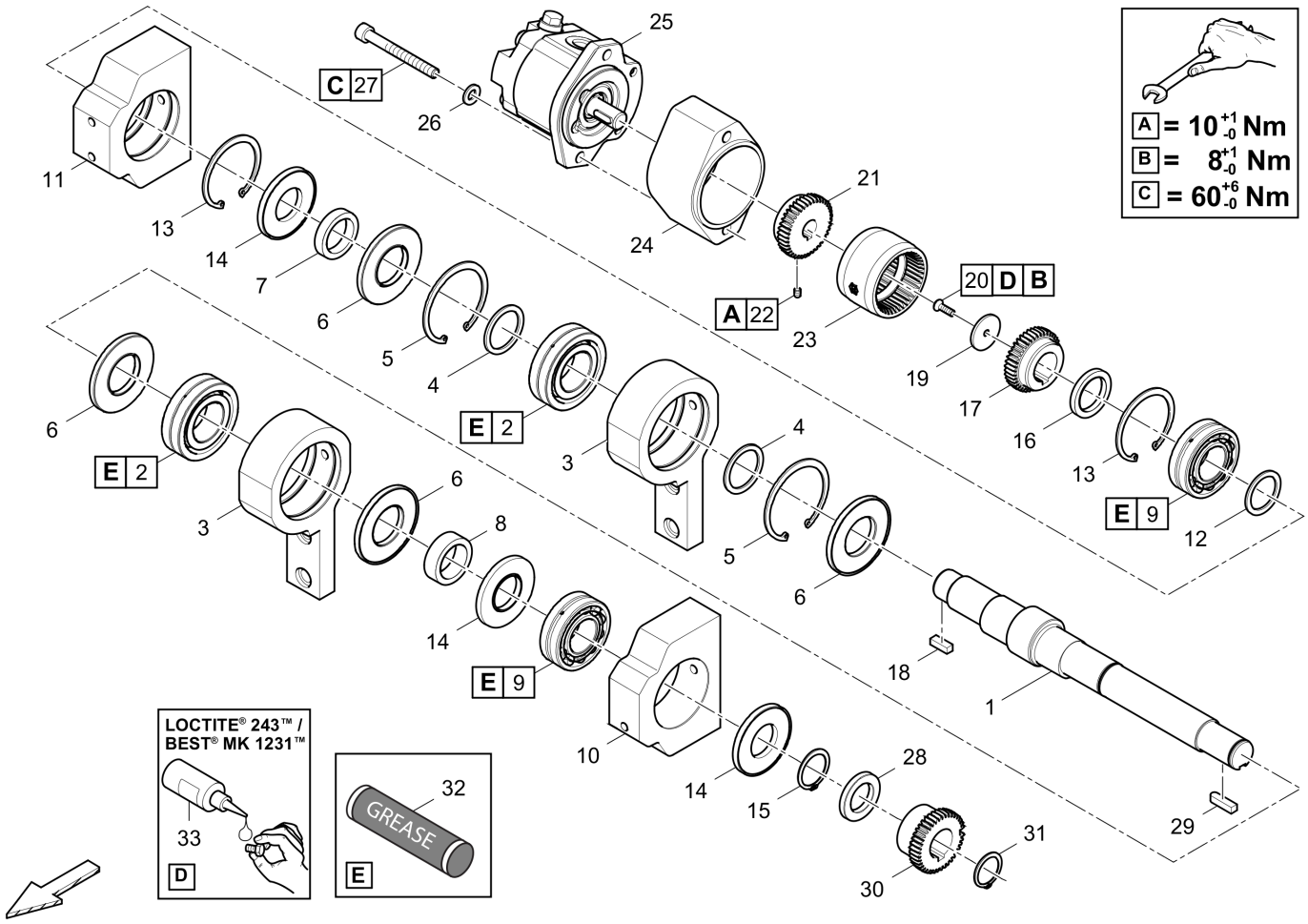

Item	Part No.	Name	Qty	L	C	SN INFO
1	4812073550	Tamper shaft	1			
2	4749540044	Bearing	2			
3	4812012754	Rocker assy	2			
4	0324155159	Supporting washer	2			
5	4749900351	Circlip	2			
6	4749302735	Sealing moulded product	4			
7	4812013285	Spacer	1			
8	4812014111	Spacer	1			
9	4812011215	Bearing	2			
10	4812013251	Bearing support	1			
11	4812013278	Bearing support	1			
12	D932120750	Shim washer	1			
13	D936029651	Circlip	2			
14	4812019069	Packing	3			
15	D936002194	Circlip	1			
16	4812014264	Spacer	1			

Item	Part No.	Name	Qty	L	C	SN INFO
17	4812014287	Coupling piece	1			
18	0337510200	Feather key	1			
19	4812016298	Washer	1			
20	0216195783	Countersunk screw	1			
21	4812013279	Hub	1			
22	4749900612	Threaded pin	1			
23	4812044123	Sleeve	1			
24	4812227162	Housing	1			
25	4812013465	Gear motor	1			
26	0333310051	Lock washer	2			
27	0211110232	Screw	2			
28	4812012849	Spacer	1			
29	D931720739	Feather key	1			
30	4812082277	Hub	1			
31	D936001864	Circlip	1			
32	4812161897	Paver Grease - 1 cartridge	1			
33	D930290215	Sealant	1			

Tamper drive, ext. r.h. 4812073576 Tamper drive, ext. r.h.

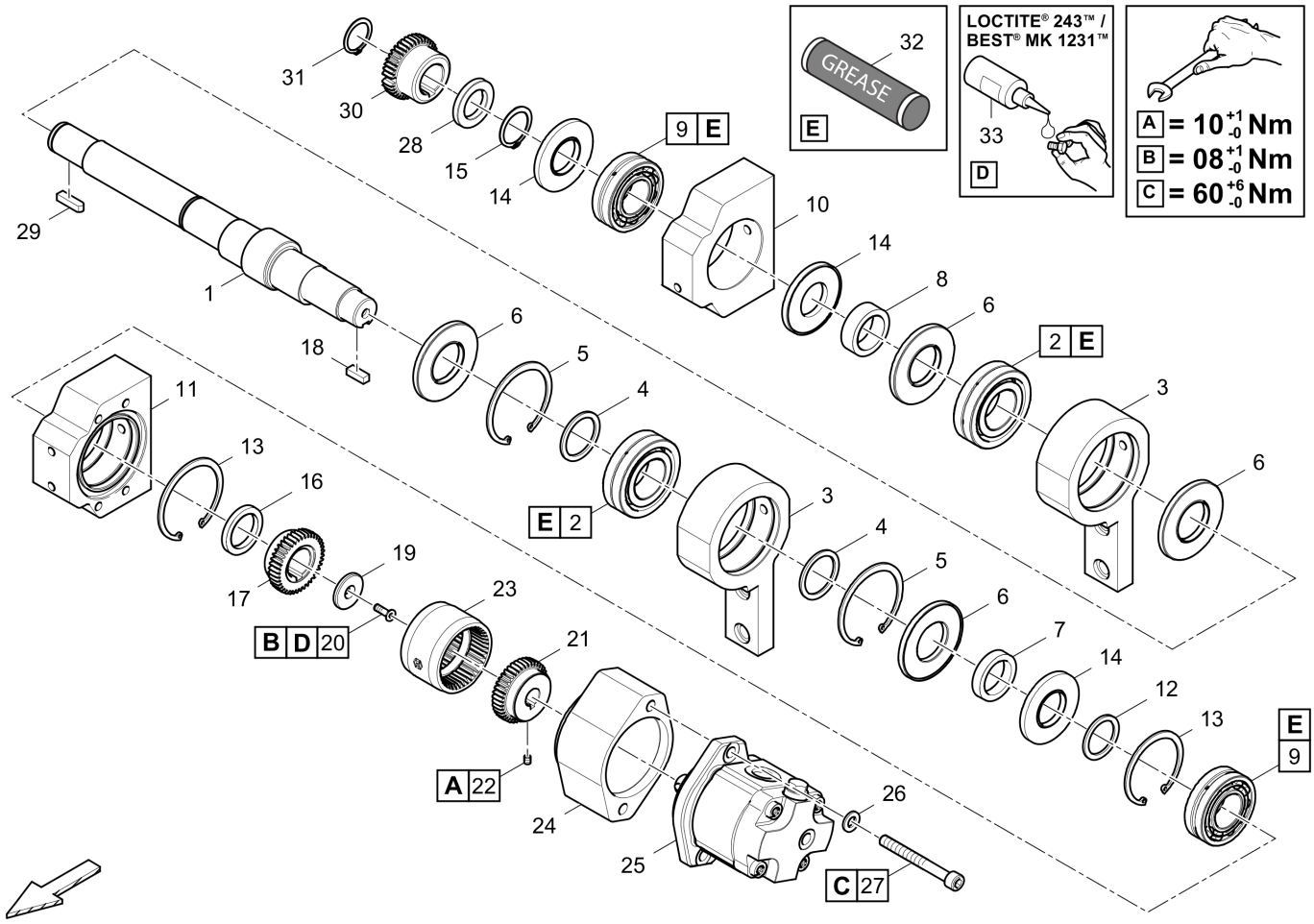

Item	Part No.	Name	Qty	L	C	SN INFO
1	4812073550	Tamper shaft	1			
2	4749540044	Bearing	2			
3	4812012754	Rocker assy	2			
4	0324155159	Supporting washer	2			
5	4749900351	Circlip	2			
6	4749302735	Sealing moulded product	4			
7	4812013285	Spacer	1			
8	4812014111	Spacer	1			
9	4812011215	Bearing	2			
10	4812013251	Bearing support	1			
11	4812013278	Bearing support	1			
12	D932120750	Shim washer	1			
13	D936029651	Circlip	2			
14	4812019069	Packing	3			
15	D936002194	Circlip	1			
16	4812014264	Spacer	1			

Item	Part No.	Name	Qty	L	C	SN INFO
17	4812014287	Coupling piece	1			
18	0337510200	Feather key	1			
19	4812016298	Washer	1			
20	0216195783	Countersunk screw	1			
21	4812013279	Hub	1			
22	4749900612	Threaded pin	1			
23	4812044123	Sleeve	1			
24	4812227162	Housing	1			
25	4812013470	Gear motor	1			
26	0333310051	Lock washer	2			
27	0211110232	Screw	2			
28	4812012849	Spacer	1			
29	D931720739	Feather key	1			
30	4812082277	Hub	1			
31	D936001864	Circlip	1			
32	4812161897	Paver Grease - 1 cartridge	1			
33	D930290215	Sealant	1			

Tamper drive centr. part, l.h. 4812071387 Tamper drive centr. part, l.h.

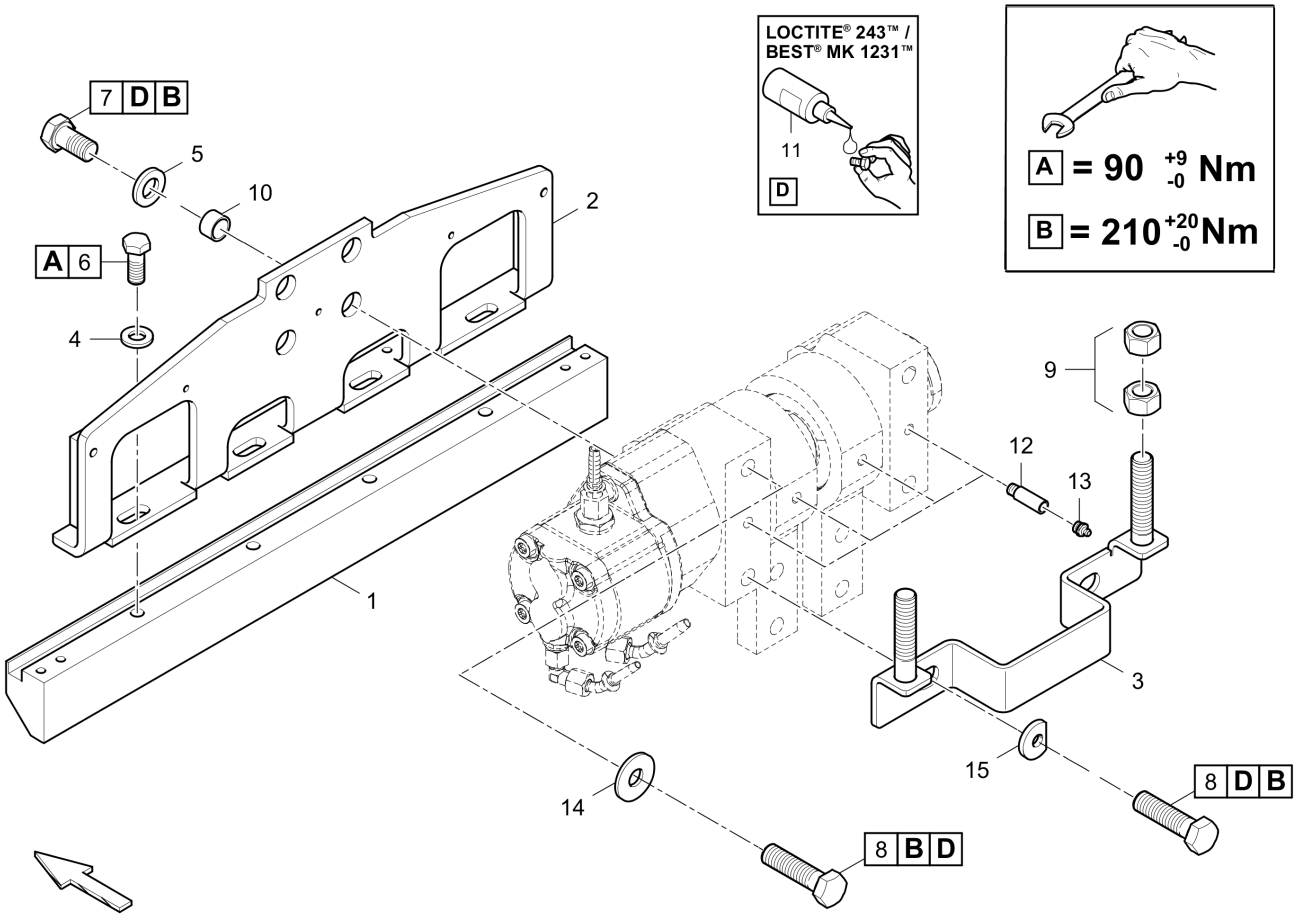

Item	Part No.	Name	Qty	L	C	SN INFO
1	4812064056	Tamper bar	1			
2	4812071396	Tamper frame	1			
3	4812016291	Brace	1			
4	0333310052	Flat washer	4			
5	0333310049	Lock washer	4			
6	0147140103	Screw	4			
7	0147147503	Hex bolt	4			
8	0147148203	Hex. head screw M16 x 65	4			
9	0266211400	Hexagon nut M16	4			
10	4749302339	Bushing	4			
11	D930290215	Sealant	1			
12	4730009355	Adapter	4			
13	D935511210	Grease nipple	4			
14	4749900538	Washer	3			
15	4812211039	Washer	1			

Tamper drive centr. part, r.h. 4812071388 Tamper drive centr. part, r.h.

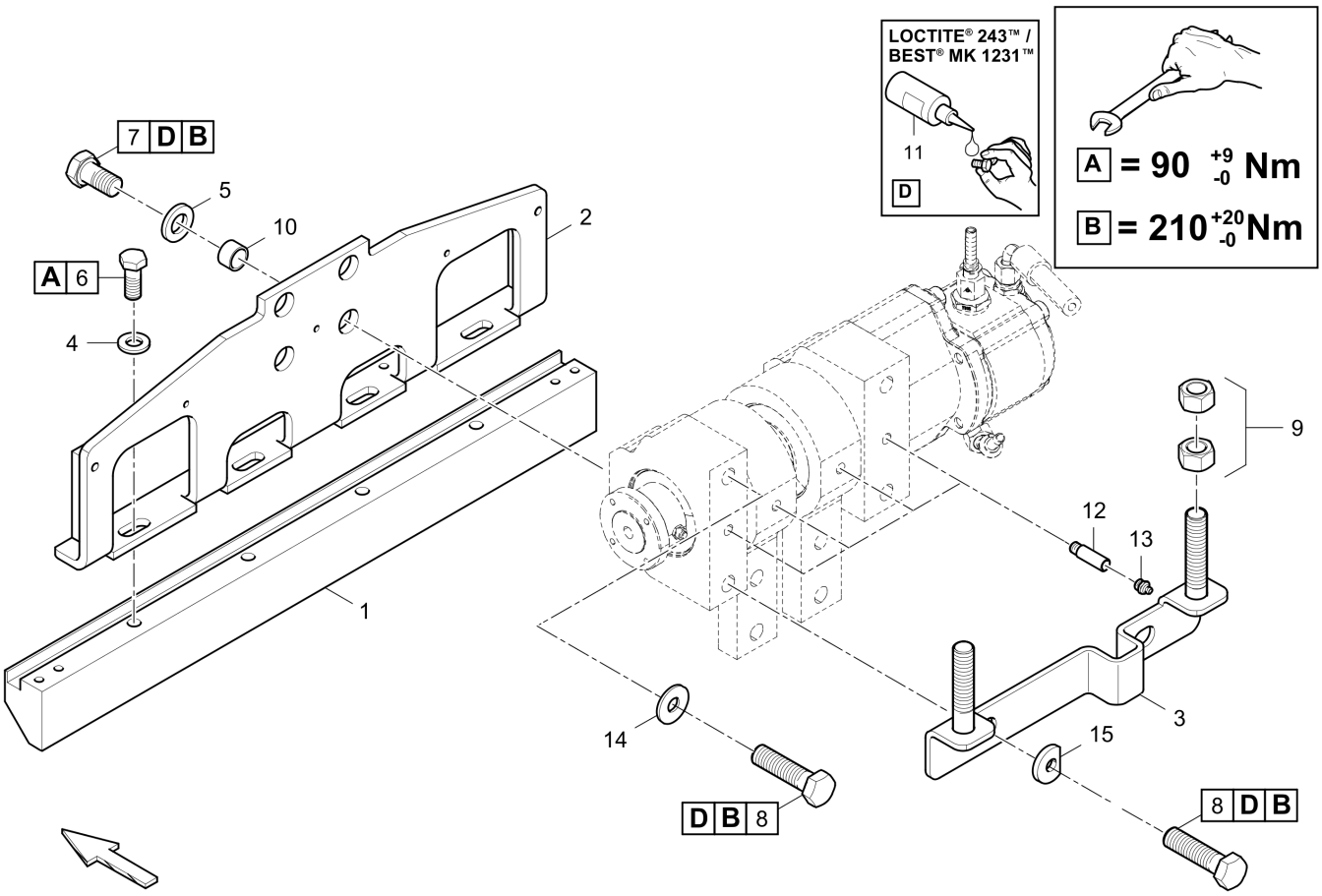

Item	Part No.	Name	Qty	L	C	SN INFO
1	4812064056	Tamper bar	1			
2	4812071396	Tamper frame	1			
3	4812215836	Brace	1			
4	0333310052	Flat washer	4			
5	0333310049	Lock washer	4			
6	0147140103	Screw	4			
7	0147147503	Hex bolt	4			
8	0147148203	Hex. head screw M16 x 65	4			
9	0266211400	Hexagon nut M16	4			
10	4749302339	Bushing	4			
11	D930290215	Sealant	1			
12	4730009355	Adapter	4			
13	D935511210	Grease nipple	4			
14	4749900538	Washer	3			
15	4812211039	Washer	1			

Tamper drive ext. part, l.h. 4812071389 Tamper drive ext. part, l.h.

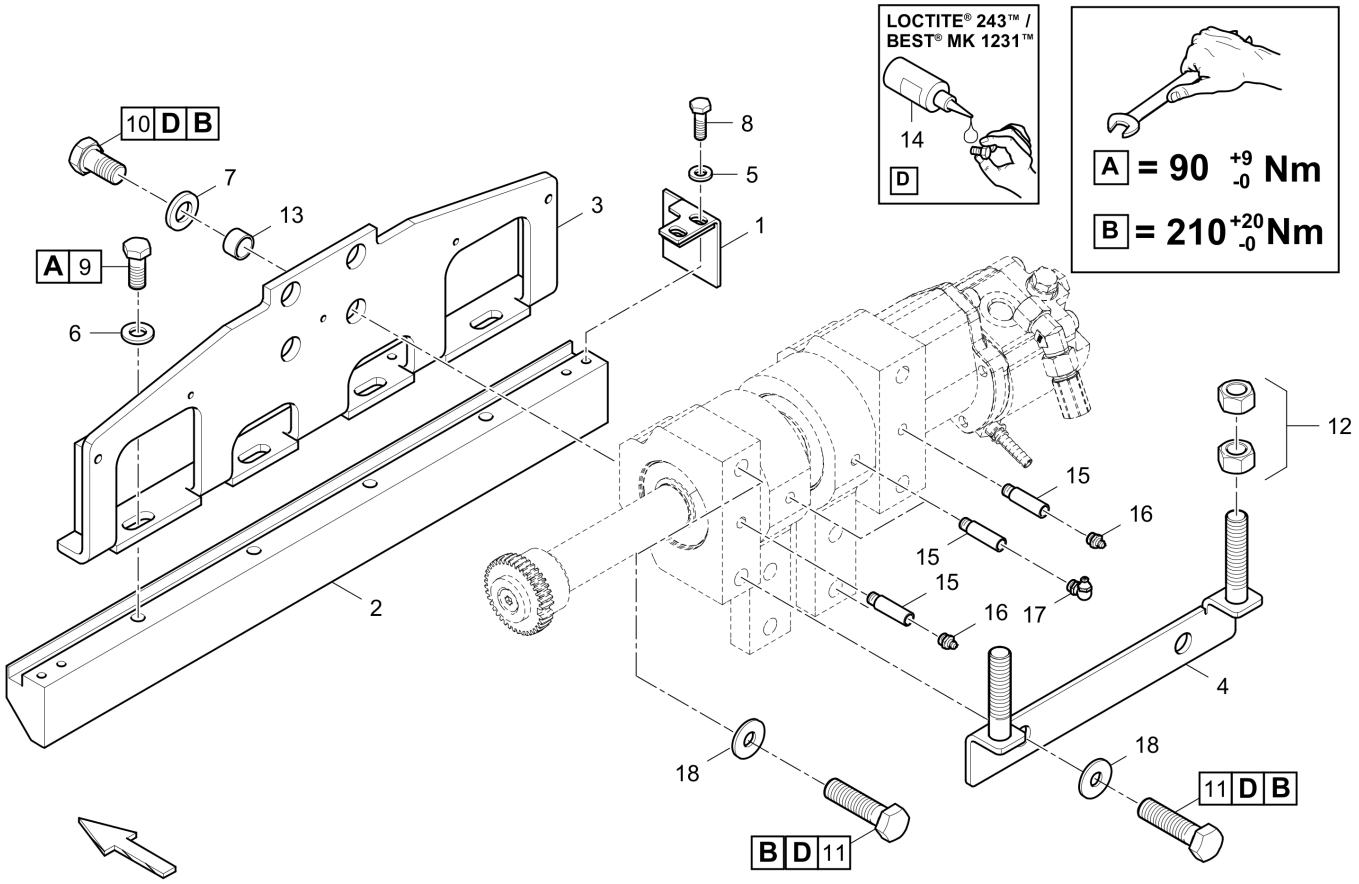

Item	Part No.	Name	Qty	L	C	SN INFO
1	4812024081	Angle	1			
2	4812064056	Tamper bar	1			
3	4812071396	Tamper frame	1			
4	4812013228	Brace	1			
5	0333310050	Lock washer	2			
6	0333310052	Flat washer	4			
7	0333310049	Lock washer	4			
8	0147132503	Hexagon bolt	2			
9	0147140103	Screw	4			
10	0147147503	Hex bolt	4			
11	0147148203	Hex. head screw M16 x 65	4			
12	0266211400	Hexagon nut M16	4			
13	4749302339	Bushing	4			
14	D930290215	Sealant	1			
15	4812073787	Adapter	4			
16	D935511210	Grease nipple	2			

Item	Part No.	Name	Qty	L	C	SN INFO
17	D935513220	Grease nipple	2			
18	4749900538	Washer	4			

Tamper drive ext. part, r.h. 4812071390 Tamper drive ext. part, r.h.

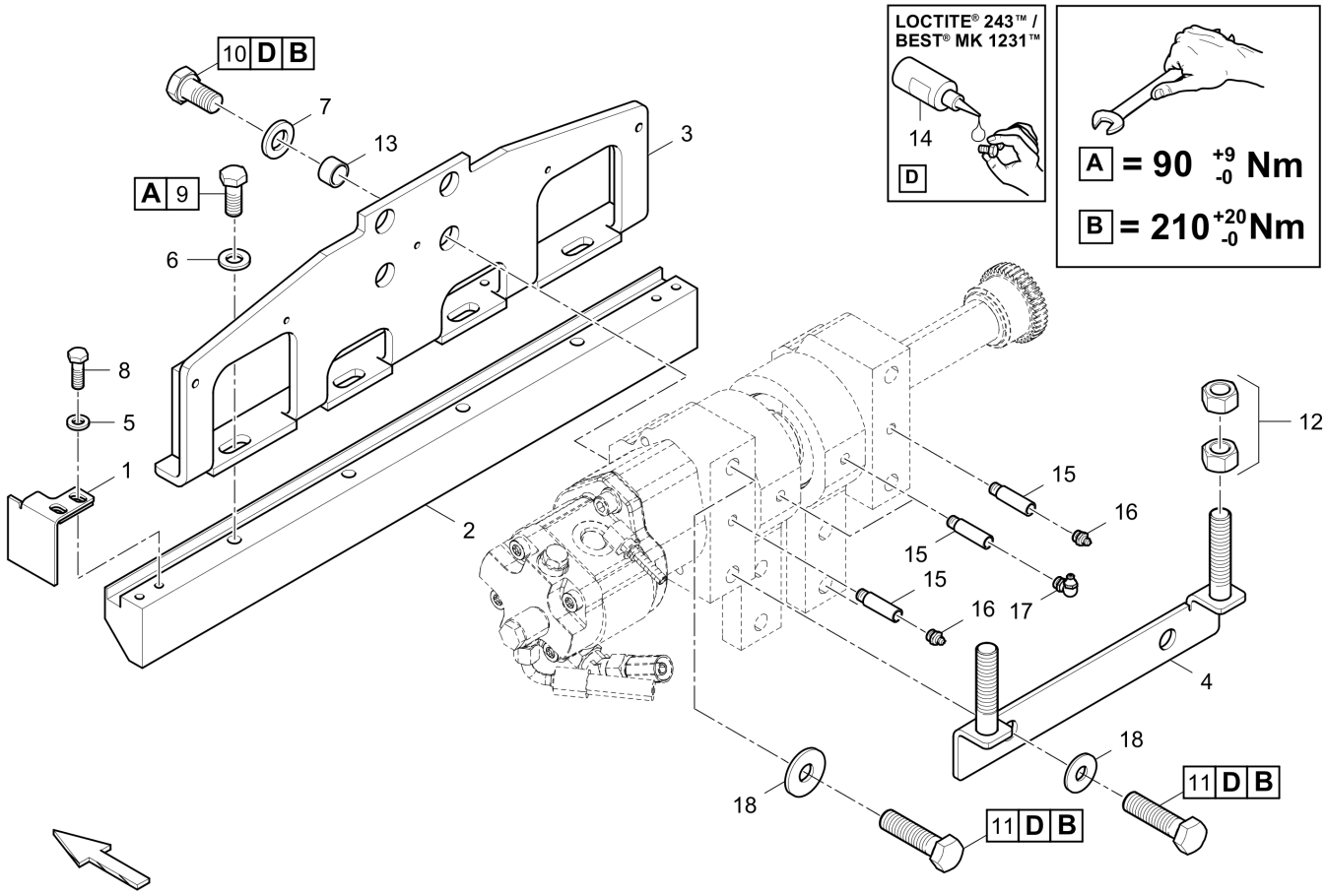

Item	Part No.	Name	Qty	L	C	SN INFO
1	4812071457	Angle, r.h.	1			
2	4812064056	Tamper bar	1			
3	4812071396	Tamper frame	1			
4	4812013228	Brace	1			
5	0333310050	Lock washer	2			
6	0333310052	Flat washer	4			
7	0333310049	Lock washer	4			
8	0147132503	Hexagon bolt	2			
9	0147140103	Screw	4			
10	0147147503	Hex bolt	4			
11	0147148203	Hex. head screw M16 x 65	4			
12	0266211400	Hexagon nut M16	4			
13	4749302339	Bushing	4			
14	D930290215	Sealant	1			
15	4812073787	Adapter	4			
16	D935511210	Grease nipple	2			

Item	Part No.	Name	Qty	L	C	SN INFO
17	D935513220	Grease nipple	2			
18	4749900538	Washer	4			

Vibration 4812215926 Vibration

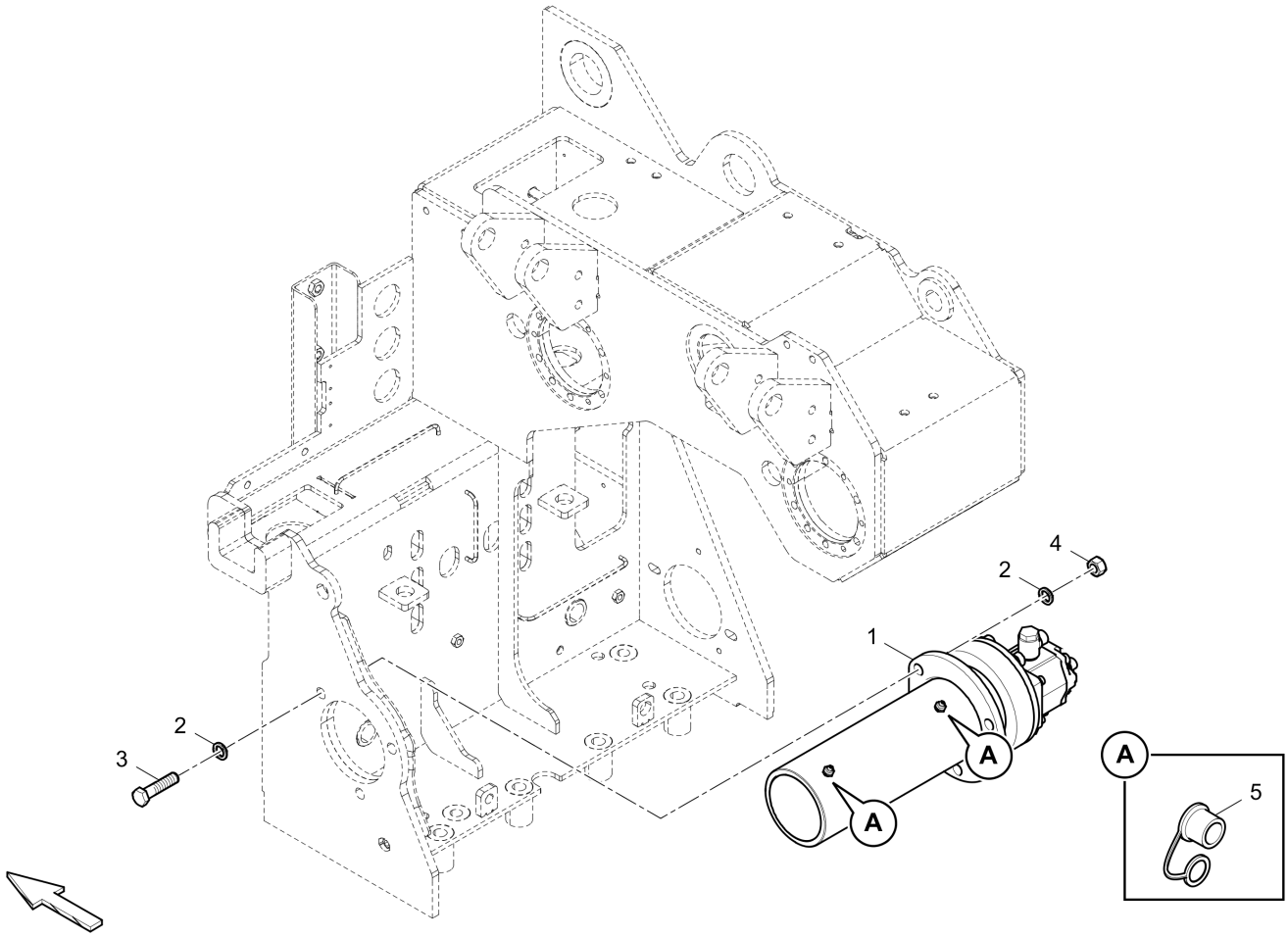

Item	Part No.	Name	Qty	L	C	SN INFO
1	4812215824	Vibration unit	1			
2	4749901808	Washer	6			
3	0147140503	Hex. head screw M12 x 50	3			
4	0266211200	Hexagon nut	3			
5	4812011219	Protection cap	2			

Vibration unit 4812215824 Vibration unit

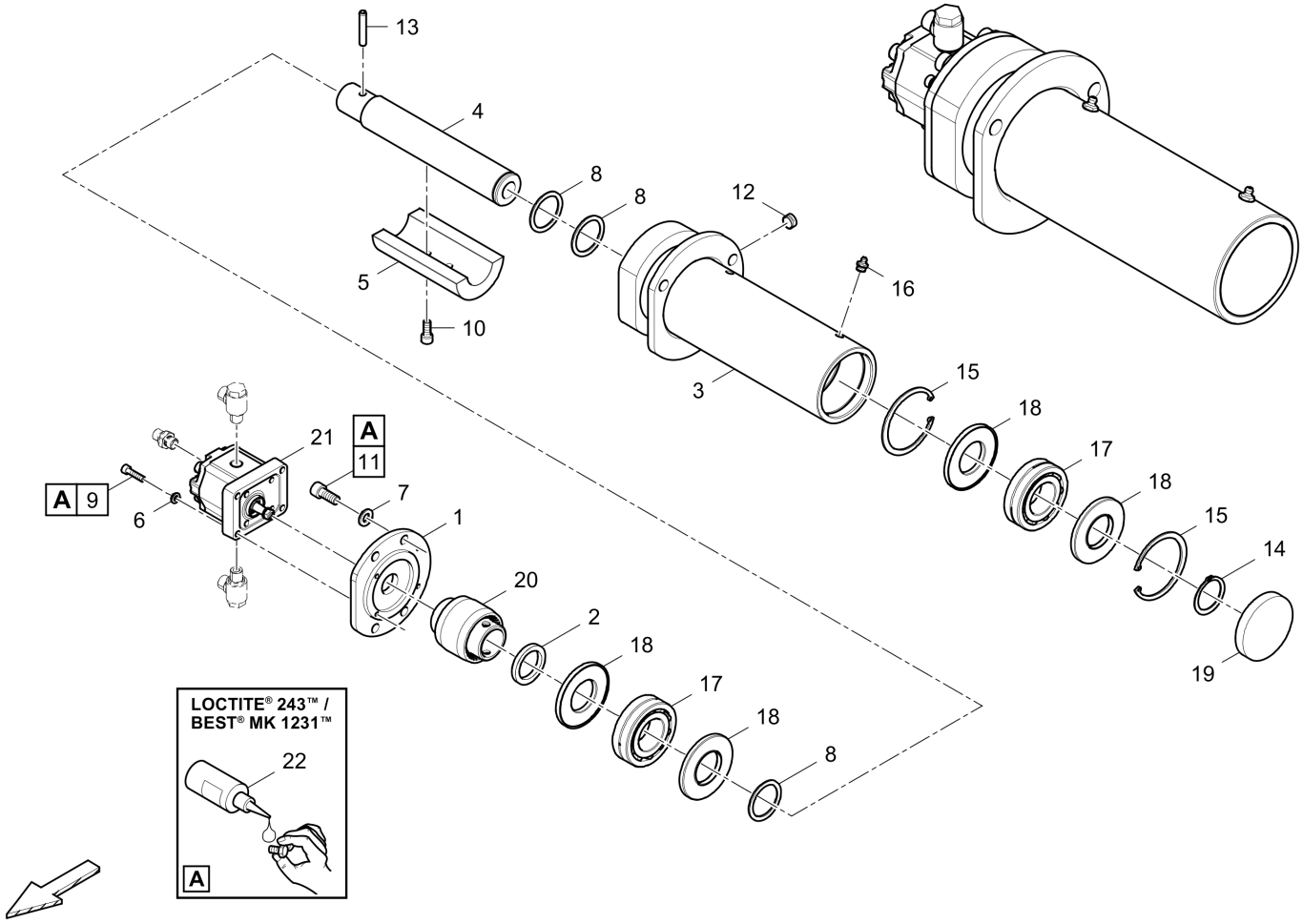

Item	Part No.	Name	Qty	L	C	SN INFO
1	4812215833	Adapter plate	1			
2	4812014264	Spacer	1			
3	4812215823	Vibration	1			
4	4812235925	Vibration shaft	1			
5	4812235926	Kinetic energy mass	1			
6	0333310055	Washer	4			
7	0333310051	Lock washer	4			
8	0324155176	Adjusting washer	3			
9	0211124903	Hex. sock. screw	4			
10	0211132303	Hex. socket screw	2			
11	0211136203	Hex sock. screw M10X25	4			
12	D937860206	Plug	1			
13	D931501125	Dowel pin	1			
14	4749900349	Circlip	1			
15	4749900351	Circlip	2			
16	D935511210	Grease nipple	2			

Item	Part No.	Name	Qty	L	C	SN INFO
17	4749540044	Bearing	2			
18	4749302735	Sealing moulded product	4			
19	4749302340	Cover	1			
20	4812011930	Coupler	1			
21	4812019025	Hydraulic motor 5cm³	1			
22	D930290215	Sealant	1			

Hydraulic 4812201754A Hydrl. complete screed

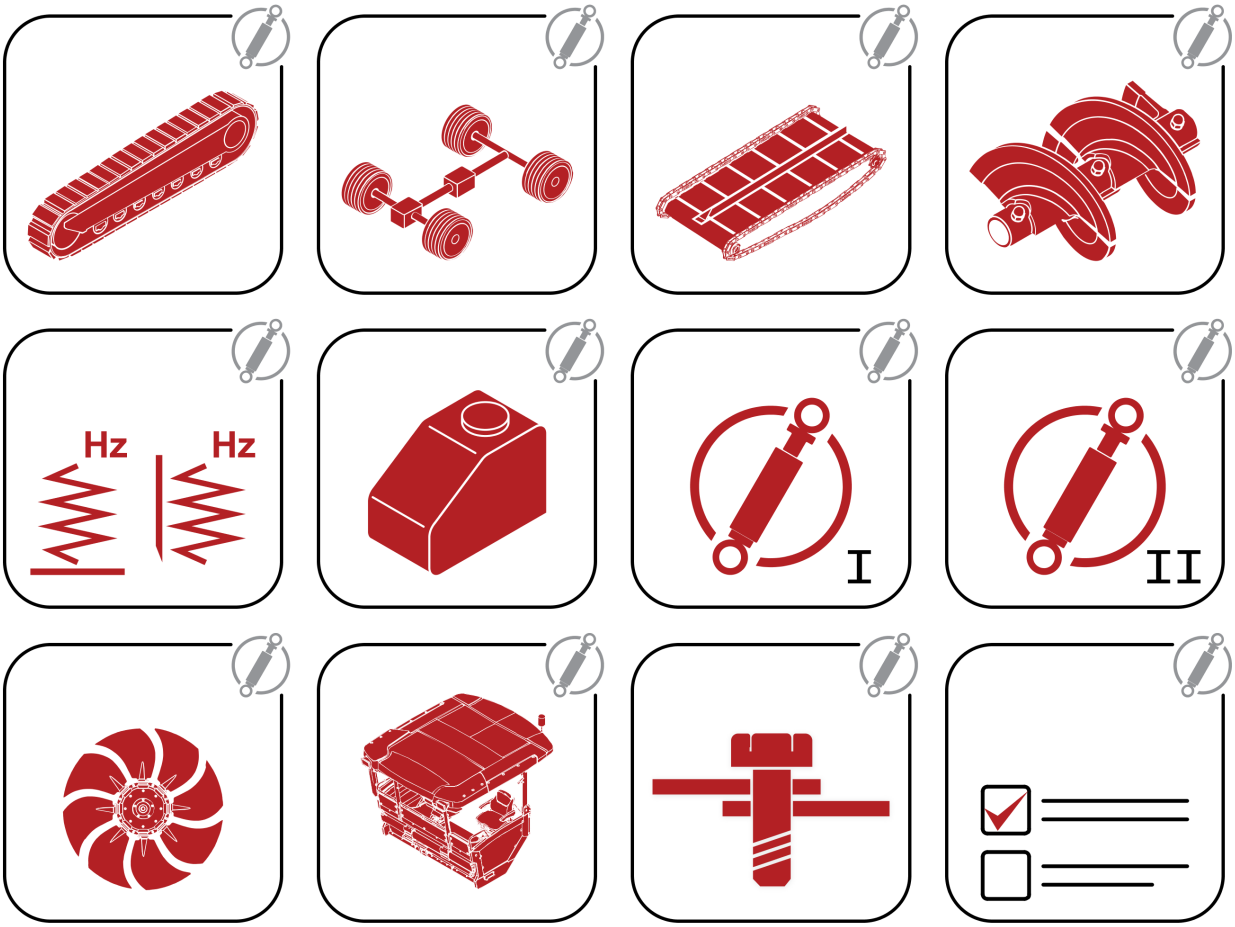

Item	Part No.	Name	Qty	L	C	SN INFO
1	4812201758	Hydrl. tamper	1			
2	4812073214	Hydrl. vibration	1			
3	4812201753	Cylinder - screed	1			

Hydrl. tamper 4812201758 Hydrl. tamper

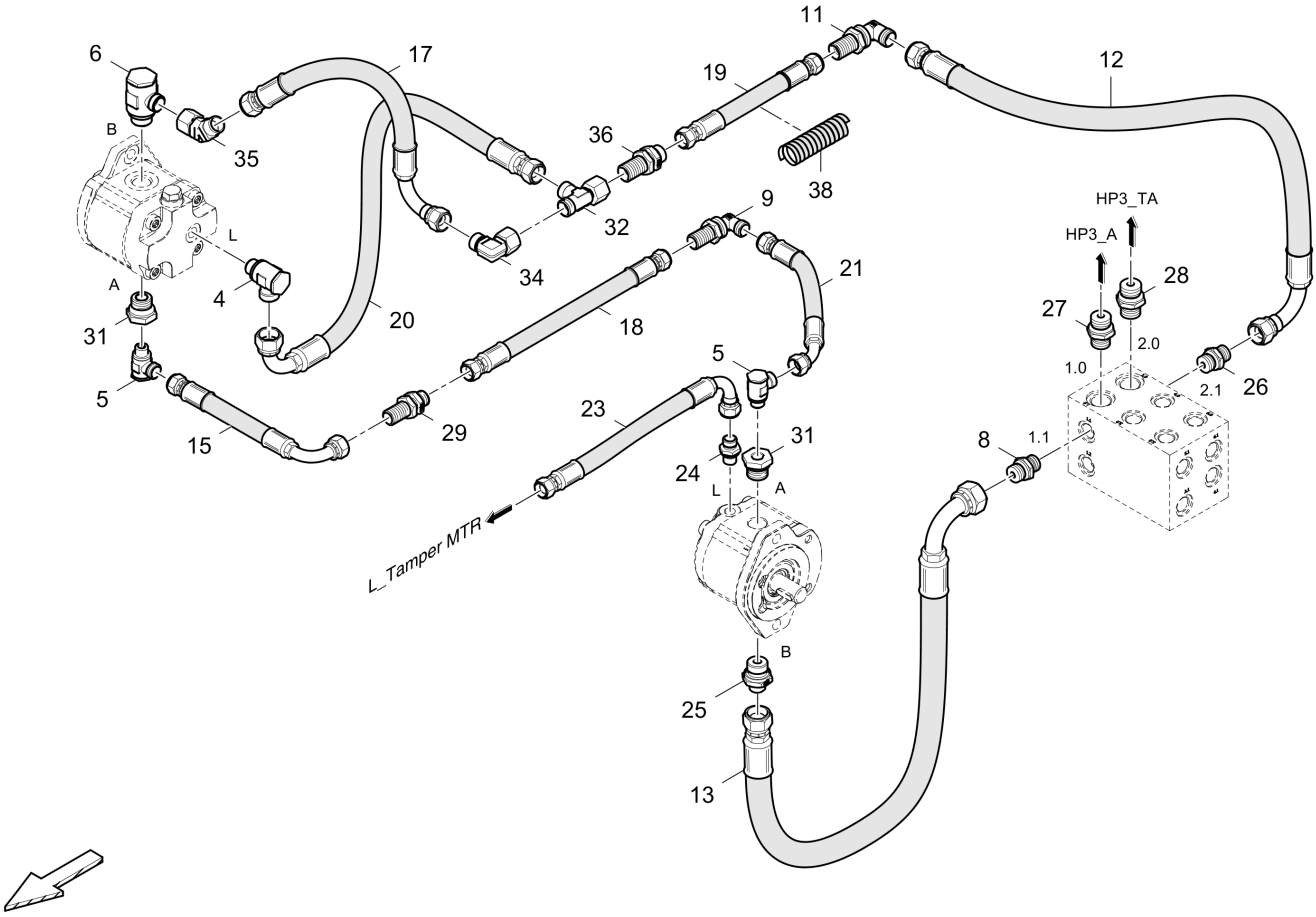

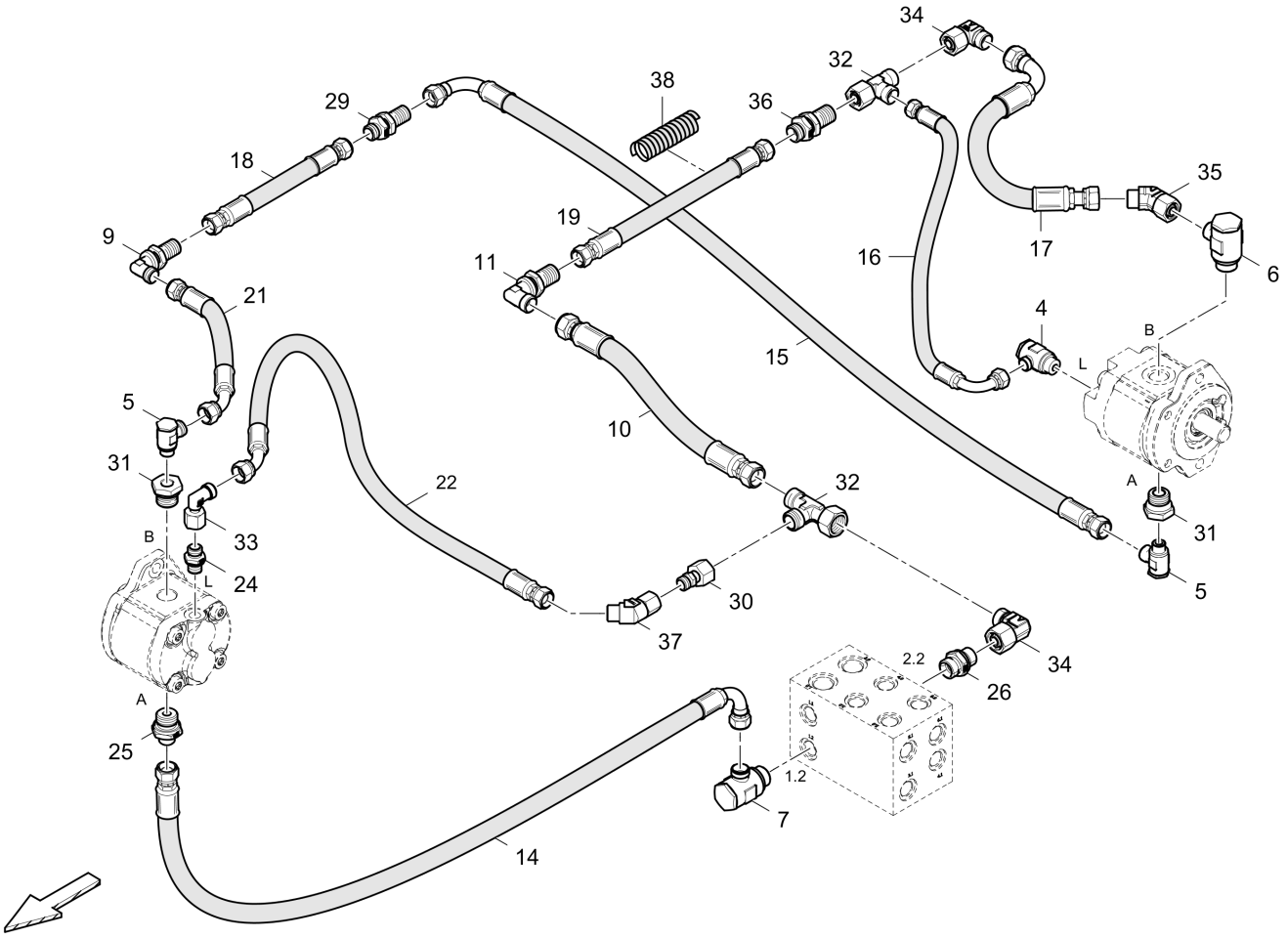

Item	Part No.	Name	Qty	L	C	SN INFO
4	D961354051	Pressure banjo fitting	2			
5	4749220439	Stud	4			
6	4749220734	Stud	2			
7	D961962108	Union	1			
8	D961941073	Male connector	1			
9	D961907007	Bulkhead union elbow	2			
10	4812216437	Hose	1			
11	D961907008	Stud	2			
12	4812077681	Hose	1			
13	4812077680	Hose	1			
14	4812216440	Hose	1			
15	4812041248	Hose	2			
16	4812216444	Hose	1			
17	4812216446	Hose	2			
18	4812216453	Hose	2			
19	4812216454	Hose	2			
20	4812216456	Hose	1			

Item	Part No.	Name	Qty	L	C	SN INFO
21	4812216457	Hose	2			
22	4812216458	Hose	1			
23	4812216459	Hose	1			
24	D961935106	Male connector	2			
25	D961935130	Male connector	2			
26	D961935108	Straight double-ended union	2			
27	D961951084	Male connector	1			
28	D961935109	Male connector	1			
29	D961906007	Bulk head union	2			
30	D961920605	Reducing socket	1			
31	D961184602	Thread reduction	4			
32	D961919008	Swivel nut branch tee	3			
33	D961917006	Elbow socket	1			
34	D961917008	Elbow socket	3			
35	4812039588	Elbow union	2			
36	D961906008	Straight bulkhead coupling	2			
37	D961355037	Swivel nut branch tee	1			
38	4812076116	Guard	1,10			

Hydrl. vibration 4812073214 Hydrl. vibration

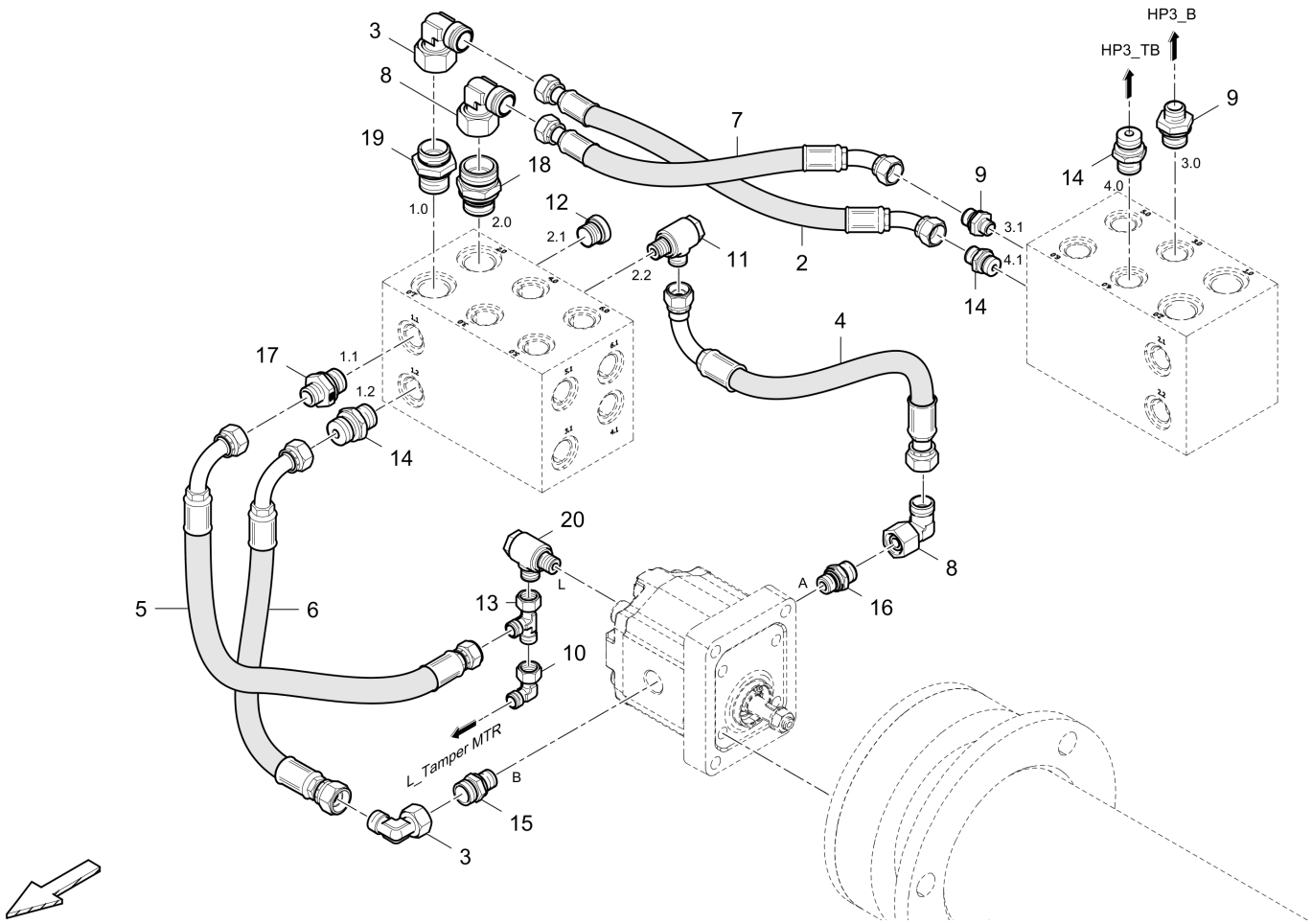

Item	Part No.	Name	Qty	L	C	SN INFO
2	4812077678	Hose	1			
3	D961917008	Elbow socket	2			
4	4812216491	Hose	1			
5	4812216478	Hose	1			
6	4812216462	Hose	1			
7	4812077677	Hose	1			
8	D961917007	Elbow socket	2			
9	D961941073	Male connector	2			
10	D961917006	Elbow socket	1			
11	D961962108	Union	1			
12	D961175108	Plug screw	1			
13	D961919006	Stud	1			
14	D961935108	Straight double-ended union	3			
15	D961935229	Male connector	1			
16	D961935207	Male connector				
17	D961935103	Straight double-ended union	1			

Item	Part No.	Name	Qty	L	C	SN INFO
18	D961935130	Male connector	1			
19	D961951084	Male connector	1			
20	D961354051	Pressure banjo fitting	1			

Cylinder - screed 4812201753 Cylinder - screed

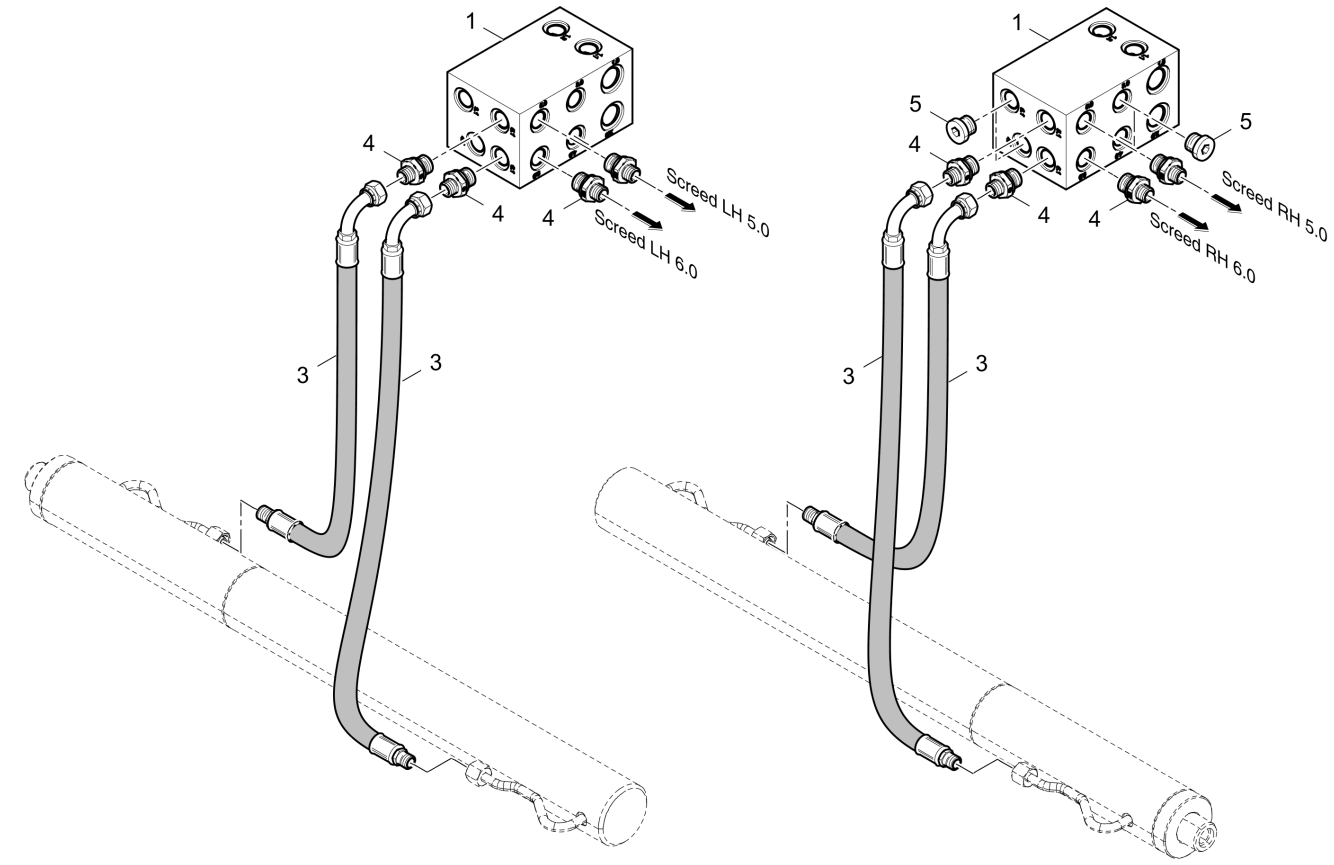

Item	Part No.	Name	Qty	L	C	SN INFO
1	4812016689	Connection block	2			
3	4812216496	Hose	4			
4	D961935103	Straight double-ended union	8			
5	D961175108	Plug screw	4			

Electric 4812074001 Electric

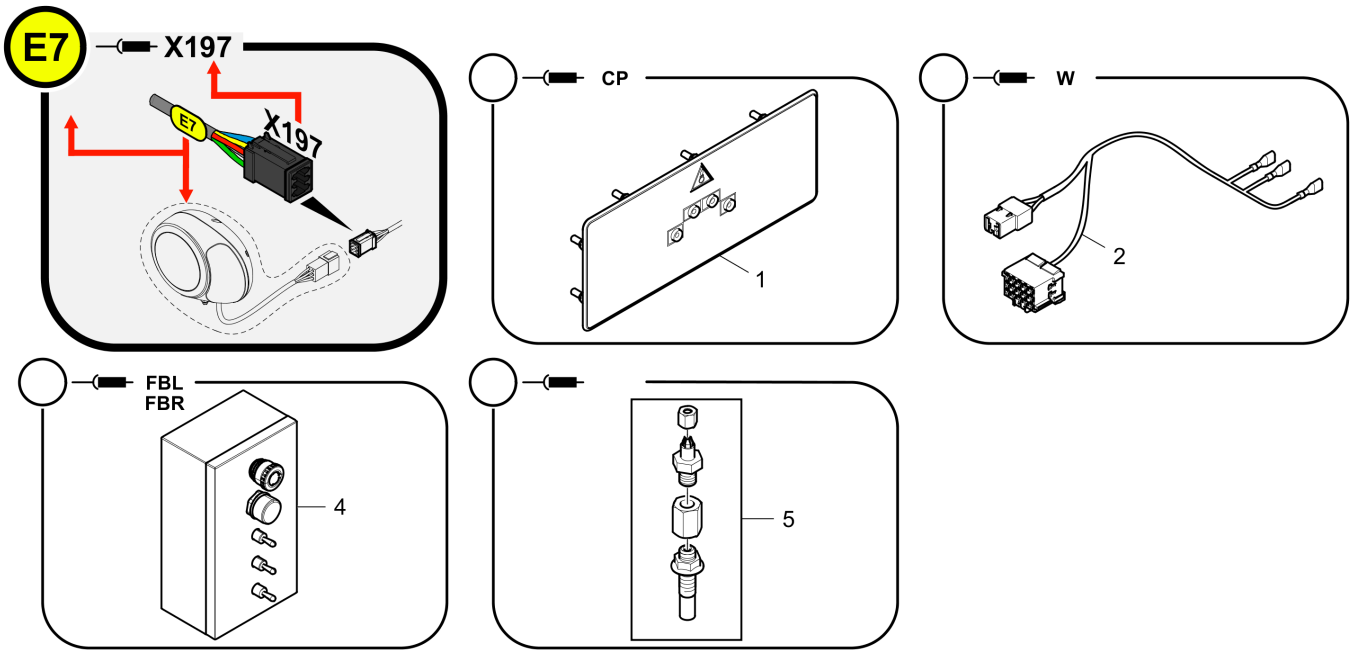

Item	Part No.	Name	Qty	L	C	SN INFO
1	4812073499	Electric Control panel	1			
2	4812073491	Wiring	1			
4	4812016618	Remote control	1			
5	4812016173	Mounting parts	1			

Control panel 4812073499 Electric Control panel

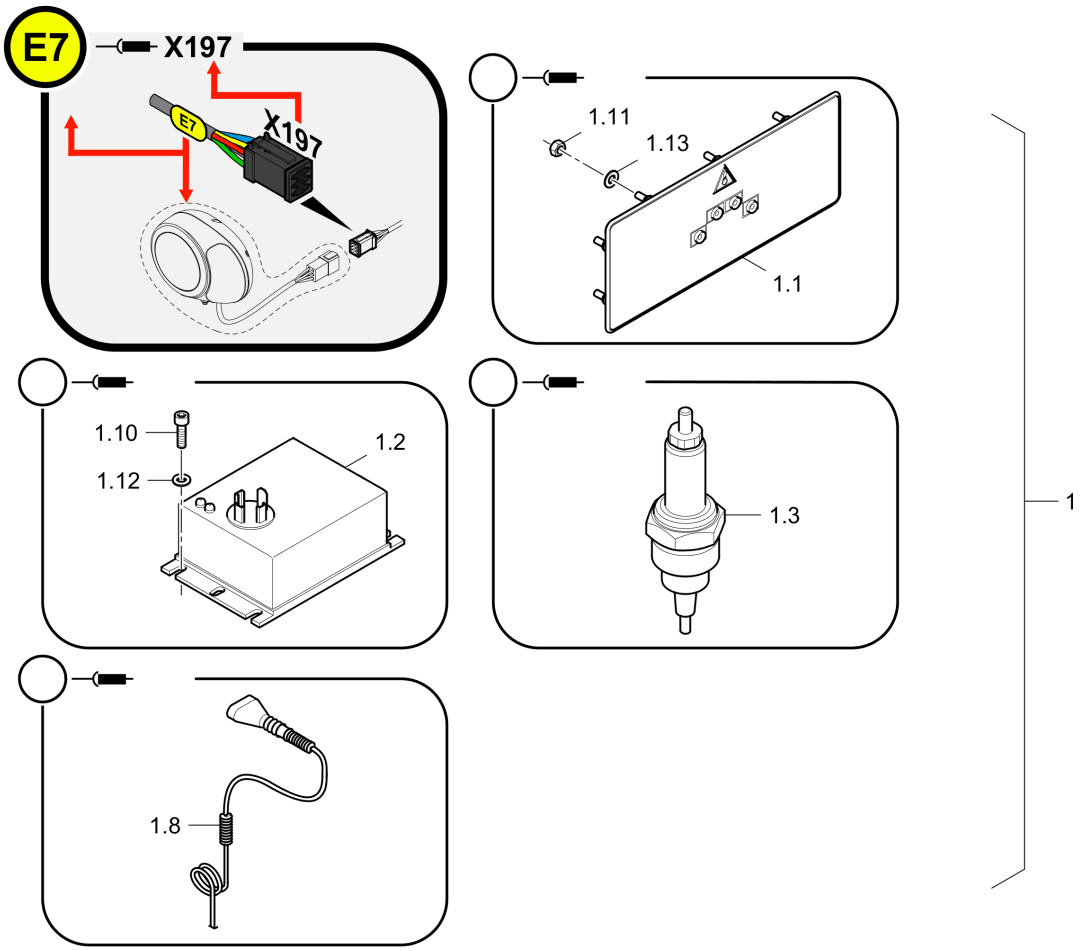

Item	Part No.	Name	Qty	L	C	SN INFO
1	4812073496	Gas heating	1			
1.1	4812215580	Control panel	1			
1.2	4812066193	Kit, Ignition box	1			
1.2.1	4812076891	Ignition box	4			
1.2.2	4812078451	Resistor	4			
1.3	4738001149	Spark plug	4			
1.8	4812042276	Resistance thermometer cpl.	1			
1.10	0211117103	Hexagon socket head cap screw	16			
1.11	0266210700	Nut	10			
1.12	4749900492	Shake-proof washer	16			
1.13	4812234041	Washer	10			

Control panel 4812215580 Control panel

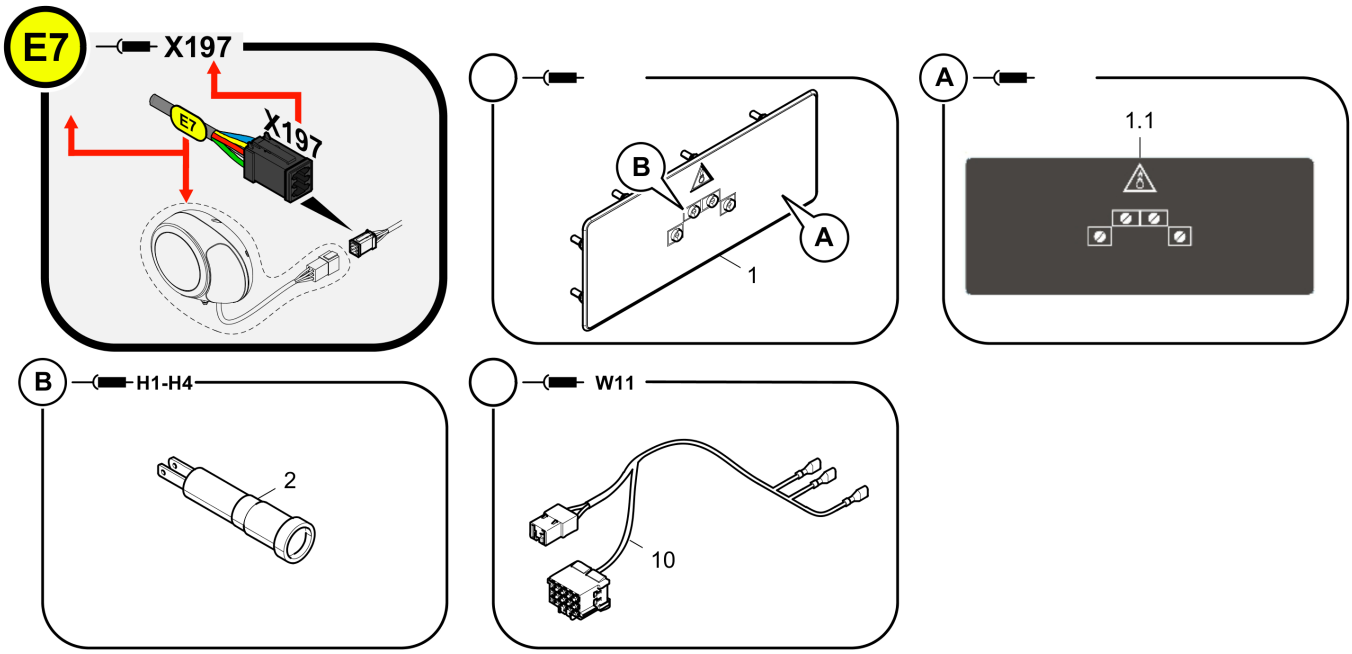

Item	Part No.	Name	Qty	L	C	SN INFO
1	4812215579	Instrument board	1			
1.1	4812215635	Foil stickers	1			
2	4749100744	Diode	4			
10	4812215555	Harness W11	1			

Harness W11 4812215555 Harness W11

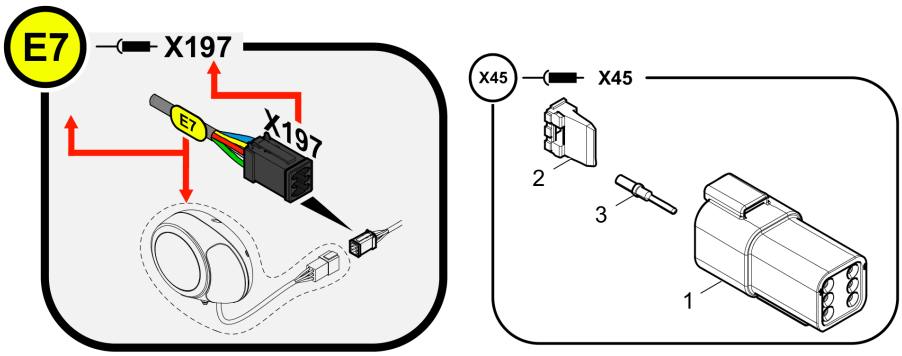

Item	Part No.	Name	Qty	L	C	SN INFO
1	4812202925	Plug	1			
2	4812034976	Key	1			
3	4812031120	Male contact	6			

Resistance thermometer cpl. 4812042276 Resistance thermometer cpl.

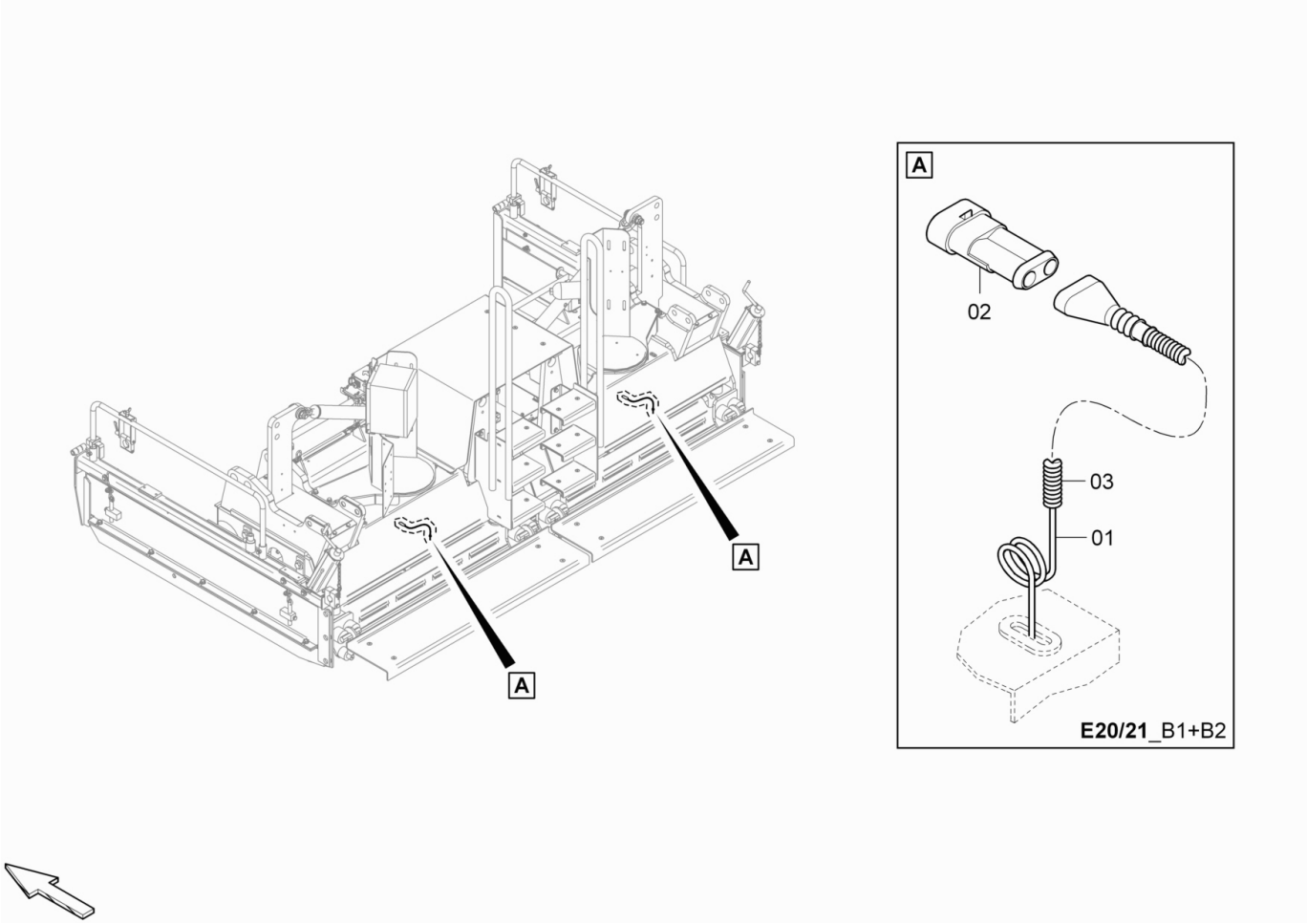

Item	Part No.	Name	Qty	L	C	SN INFO
1	4749100791	Resistance thermometer	1			
2	D977477084	Plug	1			
3	D977418857	Corrugated pipe x m	1			

Wiring 4812073491 Wiring

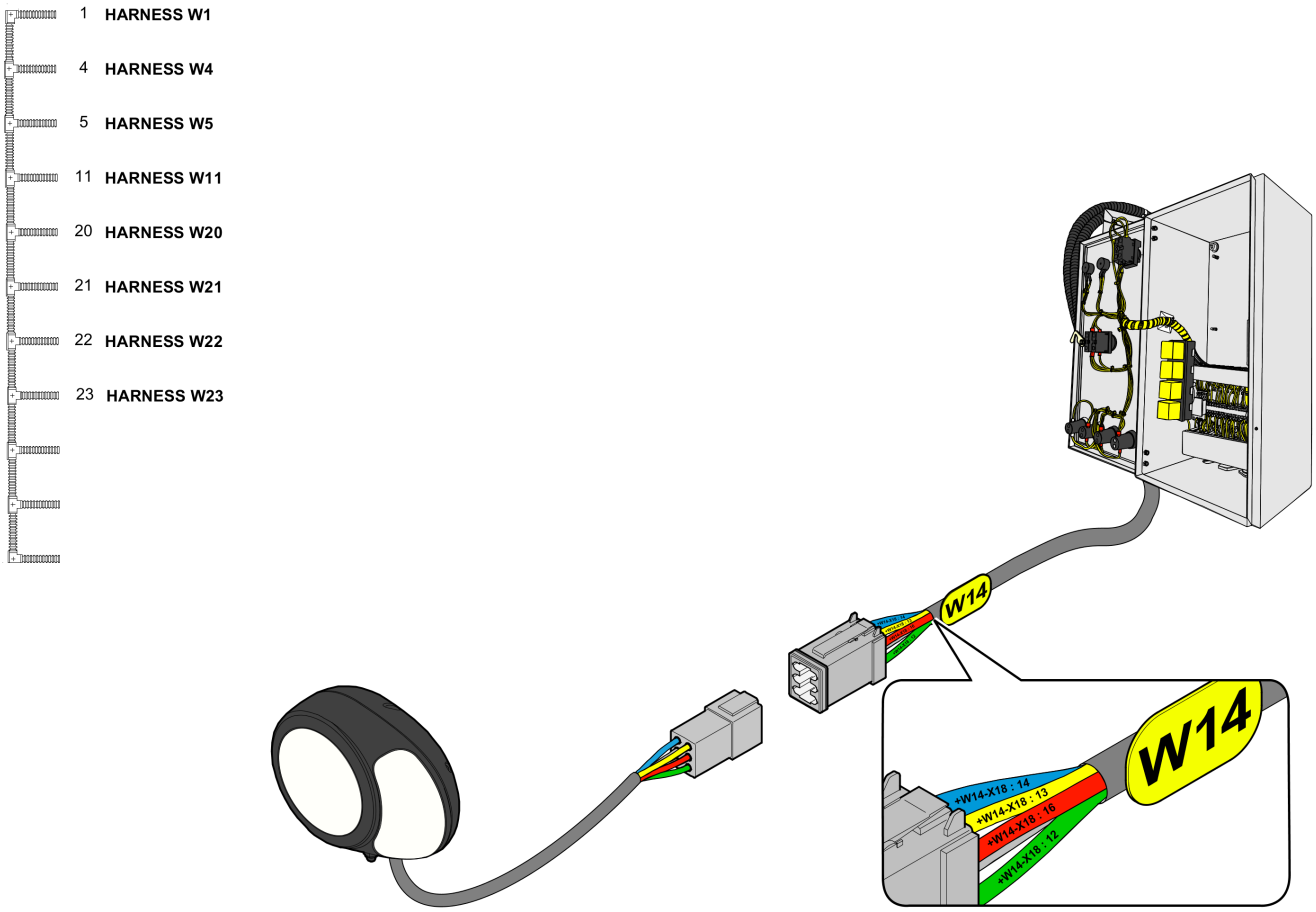

Item	Part No.	Name	Qty	L	C	SN INFO
1	4812073493	Harness W1	1			
4	4812018913	Harness W4				
5	4812018962	Harness W5				
11	4812215555	Harness W11				
20	4812019037	Ignition cable, W20	1			For Grey ignition box & cable without resistor
20	4812078606	Harness W20	1			For Blue ignition box & cable with resistor
21	4812018963	Ignition cable, W21	1			For Grey ignition box & cable without resistor
21	4812078607	Harness W21	1			For Blue ignition box & cable with resistor
22	4812017501	Ignition cable, W22	1			For Grey ignition box & cable without resistor
22	4812078608	Harness W22	1			For Blue ignition box & cable with resistor
23	4812018852	Ignition cable, W23	1			For Grey ignition box & cable without resistor
23	4812078640	Harness W23	1			For Blue ignition box & cable with resistor

Harness 4812073493 Harness W1

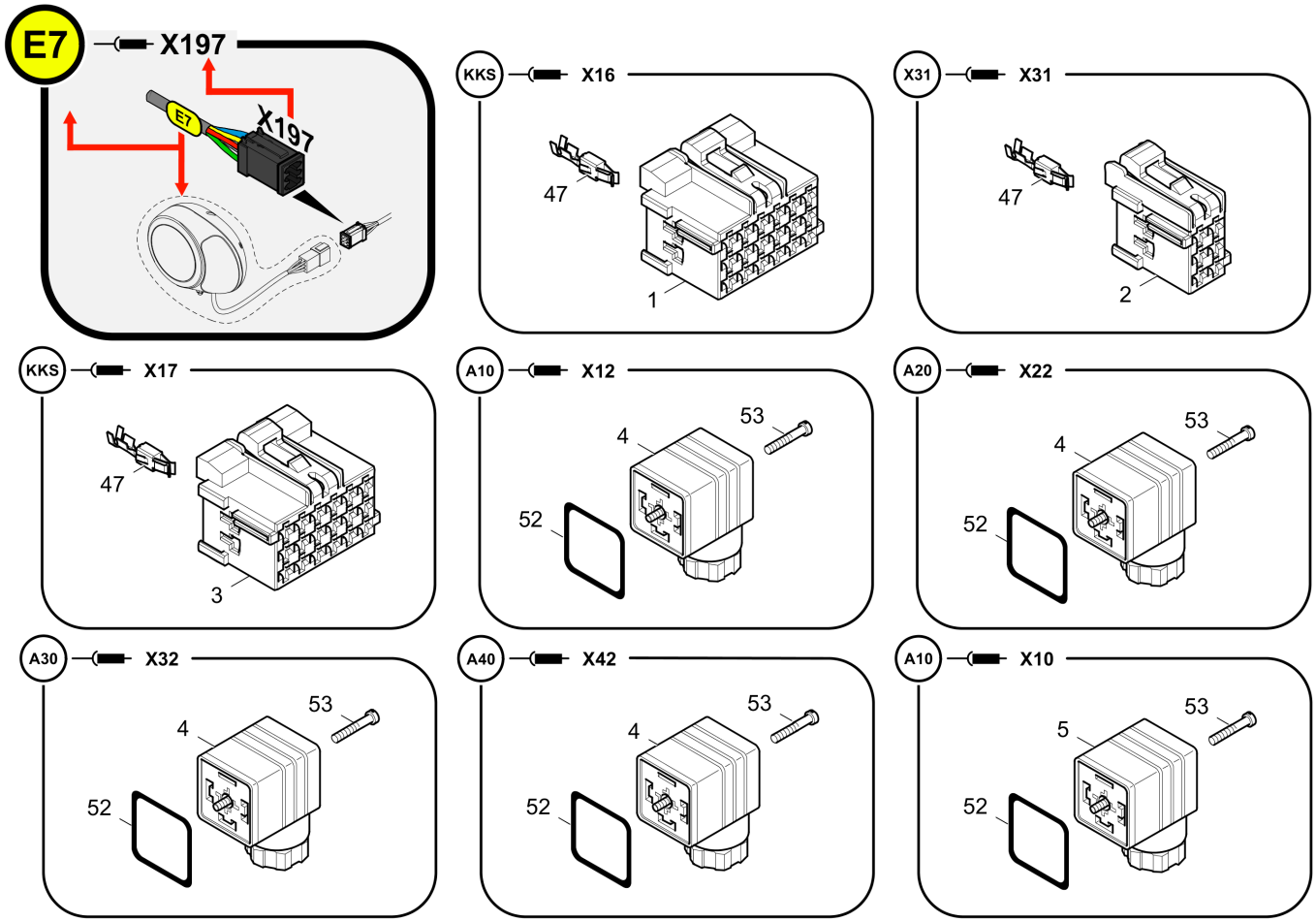

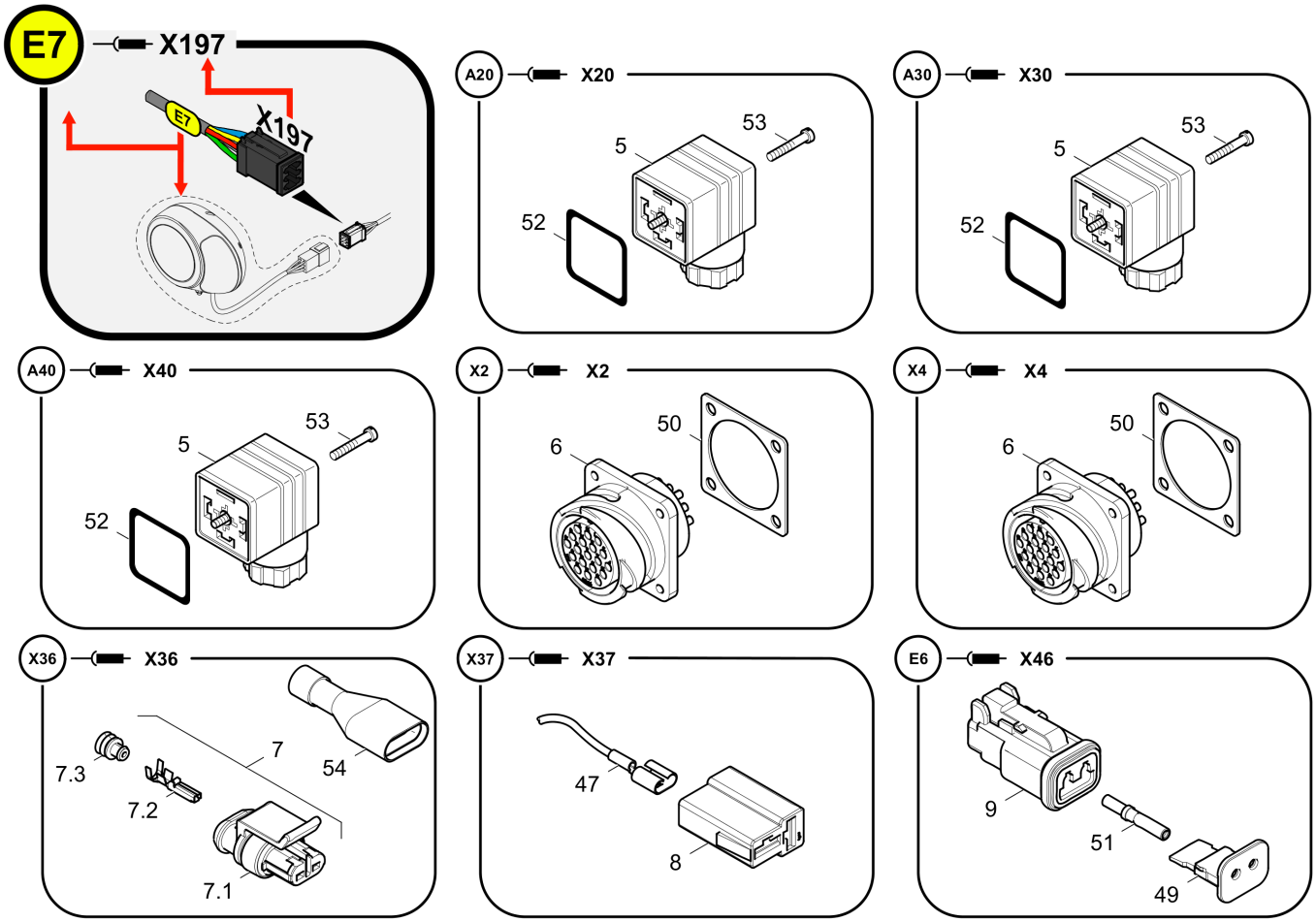
E7
X197
E7
X197
A20
X20
5
53
52
A30
X30
5
53
52
A40
X40
5
53
52
X2
X2
6
50
X4
X4
6
50
X36
X36
7.3
7.2
7
54
7.1
X37
X37
47
8
E6
X46
9
51
49

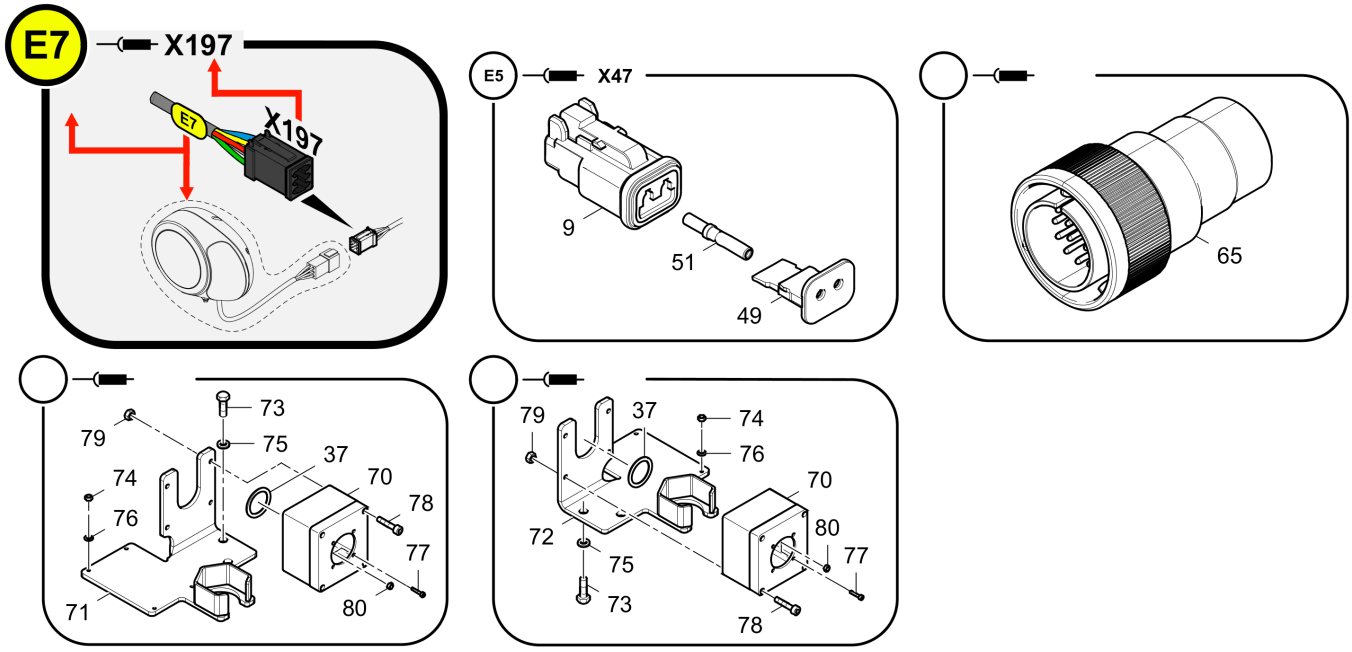

Item	Part No.	Name	Qty	L	C	SN INFO
1	4812029618	Power-timer housing	1			
2	4812046267	Power timer housing	1			
3	4812029238	Power-timer housing	1			
4	D977476443	Valve plug	4			
5	D977476437	Elbow plug grau/ grey	4			
6	4812073632	Plug	2			
7	D977477184	Plug	1			
7.1	D977477102	Socket shell	1			
7.2	D977478301	Socket contact	2			
7.3	D977478231	Sealing	2			
8	D977330125	Female housing	1			
9	D977466134	Socket shell	2			
37	4812076773	Gasket	2			
47	4812030987	Female contact	42			
48	D977397117	Receptacle for tabs	2			
49	D977466137	Key	2			
50	D977416567	Sealing	2			

Item	Part No.	Name	Qty	L	C	SN INFO
51	D977466144	Socket contact	4			
52	4812044724	Sealing	8			
53	4812045784	Screw	8			
54	D977418050	Rubber grommet	1			
65	4812016674	Dummy plug	2			
70	4812076800	Socket enclosure	2			
71	4812063273	Retainer, l.h.	1			
72	4812063276	Retainer, r.h.	1			
73	0147132303	Hexagon bolt	4			
74	0266210600	Hexagon nut	8			
75	0333310050	Lock washer	4			
76	4812202818	Lock washer	8			
77	4812072960	Cap screw	8			
78	0211117303	Slotted screw	4			
79	4812071486	Hexagon nut	4			
80	D938501002	Nut	8			

Harness 4812018913 Harness W4

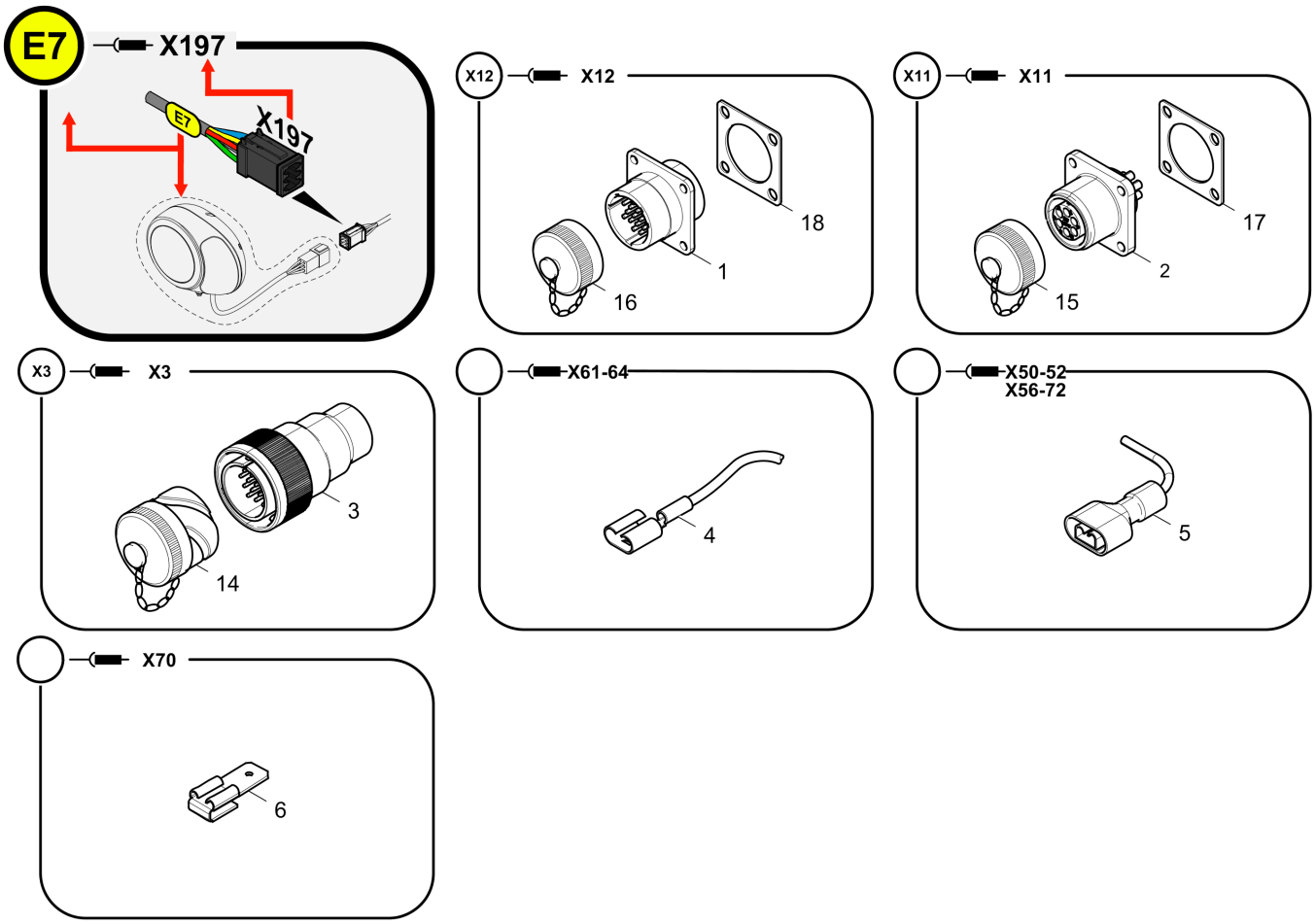

Item	Part No.	Name	Qty	L	C	SN INFO
1	4812073671	Socket	1			
2	4812073676	Socket	1			
3	4812073667	Plug	1			
4	4749100631	Receptacle for tabs Red	1			
5	D977397710	Receptacle	1			
6	4812045090	Receptacle for tabs	1			
14	4812073686	Dust cap	1			
15	4812073687	Dust cap	1			
16	4812073688	Dust cap	1			
17	D977416564	Sealing	1			
18	D977416566	Sealing	1			

Harness 4812018962 Harness W5

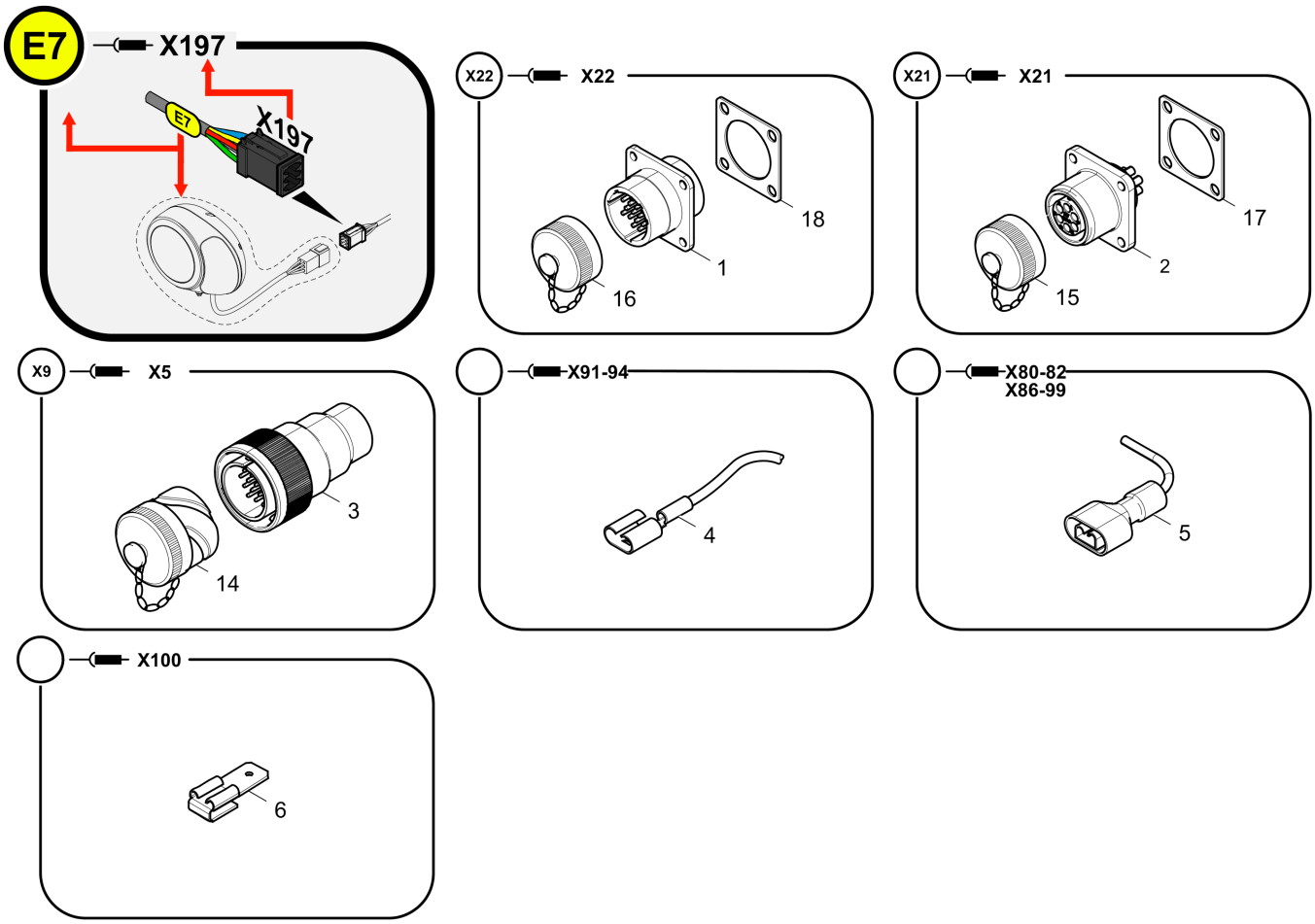

Item	Part No.	Name	Qty	L	C	SN INFO
1	4812073671	Socket	1			
2	4812073676	Socket	1			
3	4812073667	Plug	1			
4	4749100631	Receptacle for tabs Red	1			
5	D977397710	Receptacle	1			
6	4812045090	Receptacle for tabs	1			
14	4812073686	Dust cap	1			
15	4812073687	Dust cap	1			
16	4812073688	Dust cap	1			
17	D977416564	Sealing	1			
18	D977416566	Sealing	1			

Harness 4812019037 Ignition cable, W20

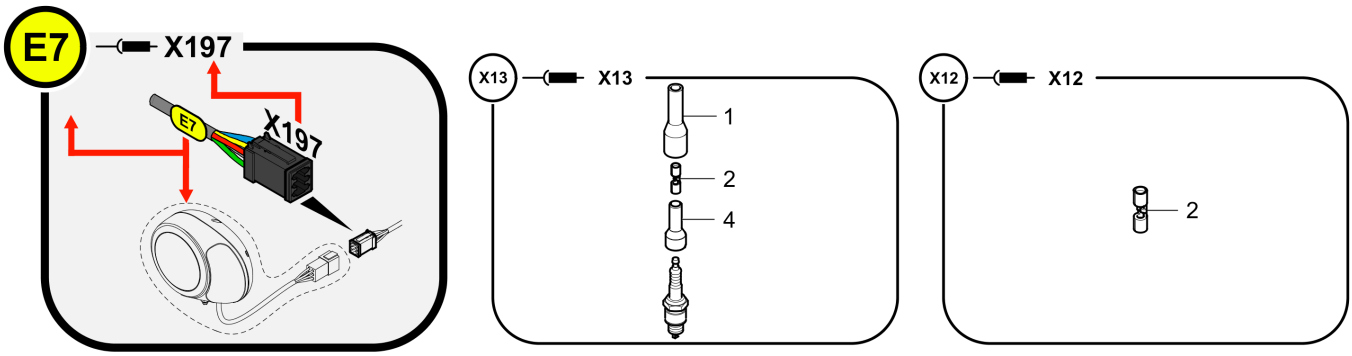

Item	Part No.	Name	Qty	L	C	SN INFO
1	D977058582	Spark plug connector	1			
2	4749100758	Sleeve	1			
4	4749100759	Rubber	1			

Harness 4812078606 Harness W20

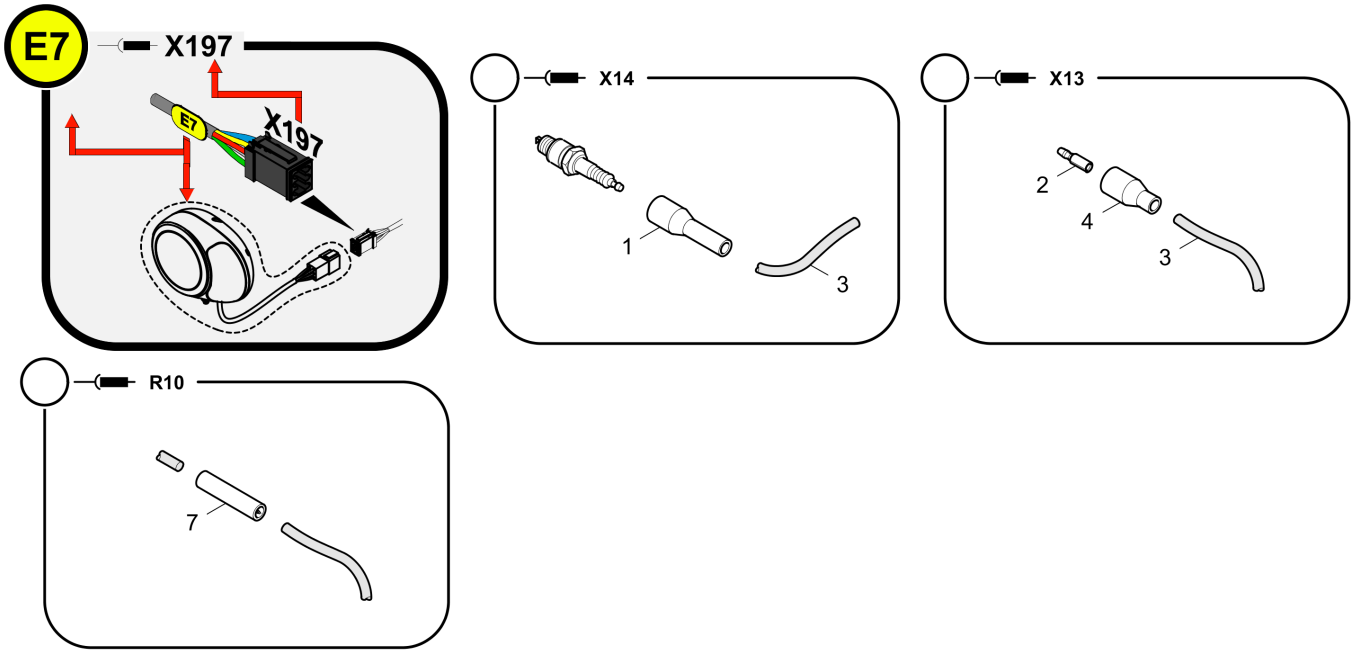

Item	Part No.	Name	Qty	L	C	SN INFO
1	D977058582	Spark plug connector	1			
2	4749100758	Sleeve	1			
3	4749110086	Ignition cable x m	2			
4	4749100759	Rubber	1			
7	4812078451	Resistor	1			

Harness 4812018963 Ignition cable, W21

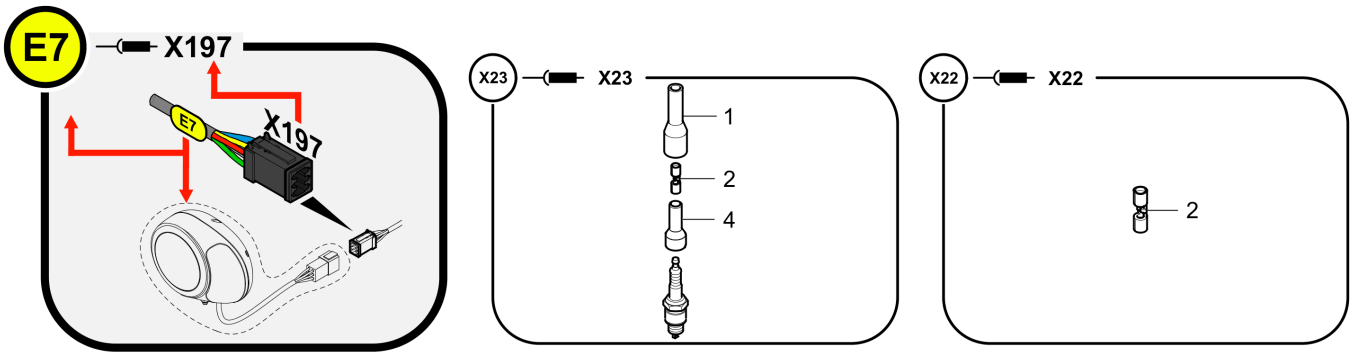

Item	Part No.	Name	Qty	L	C	SN INFO
1	D977058582	Spark plug connector	1			
2	4749100758	Sleeve	1			
4	4749100759	Rubber	1			

Harness 4812078607 Harness W21

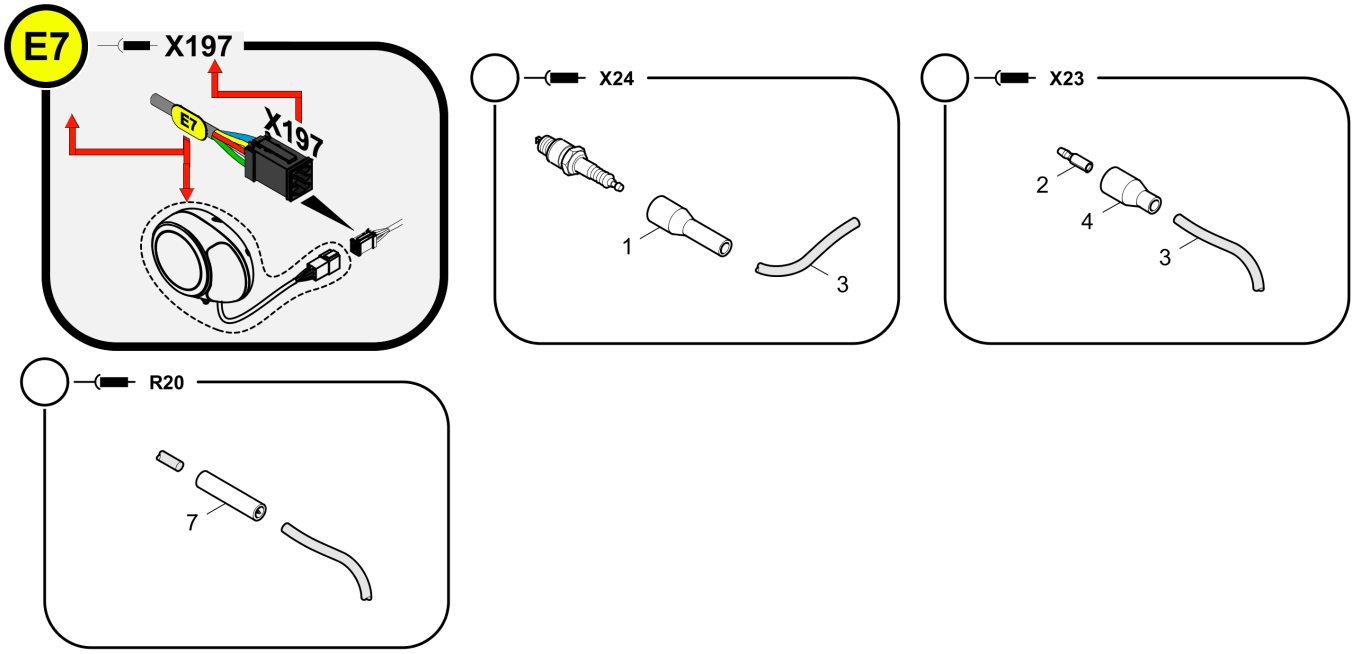

Item	Part No.	Name	Qty	L	C	SN INFO
1	D977058582	Spark plug connector	1			
2	4749100758	Sleeve	1			
3	4749110086	Ignition cable x m	2			
4	4749100759	Rubber	1			
7	4812078451	Resistor	1			

Harness 4812017501 Ignition cable, W22

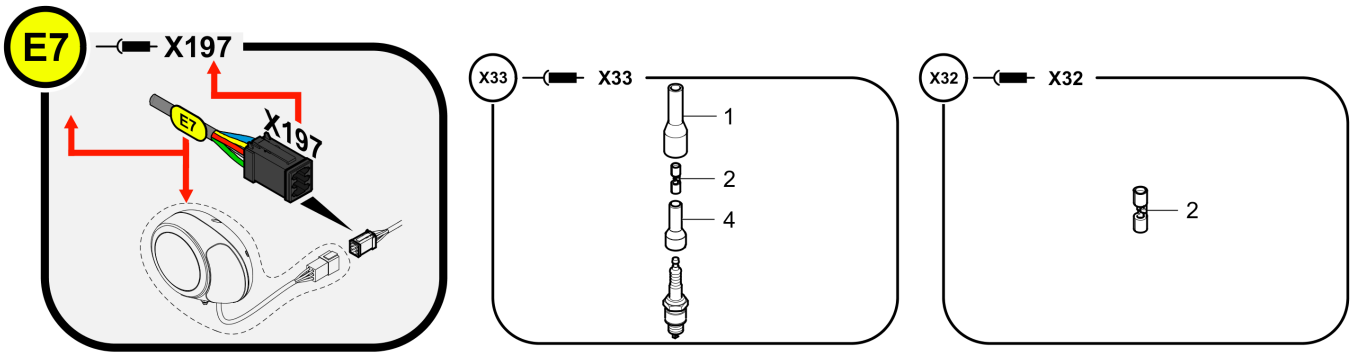

Item	Part No.	Name	Qty	L	C	SN INFO
1	D977058582	Spark plug connector	1			
2	4749100758	Sleeve	1			
4	4749100759	Rubber	1			

Harness 4812078608 Harness W22

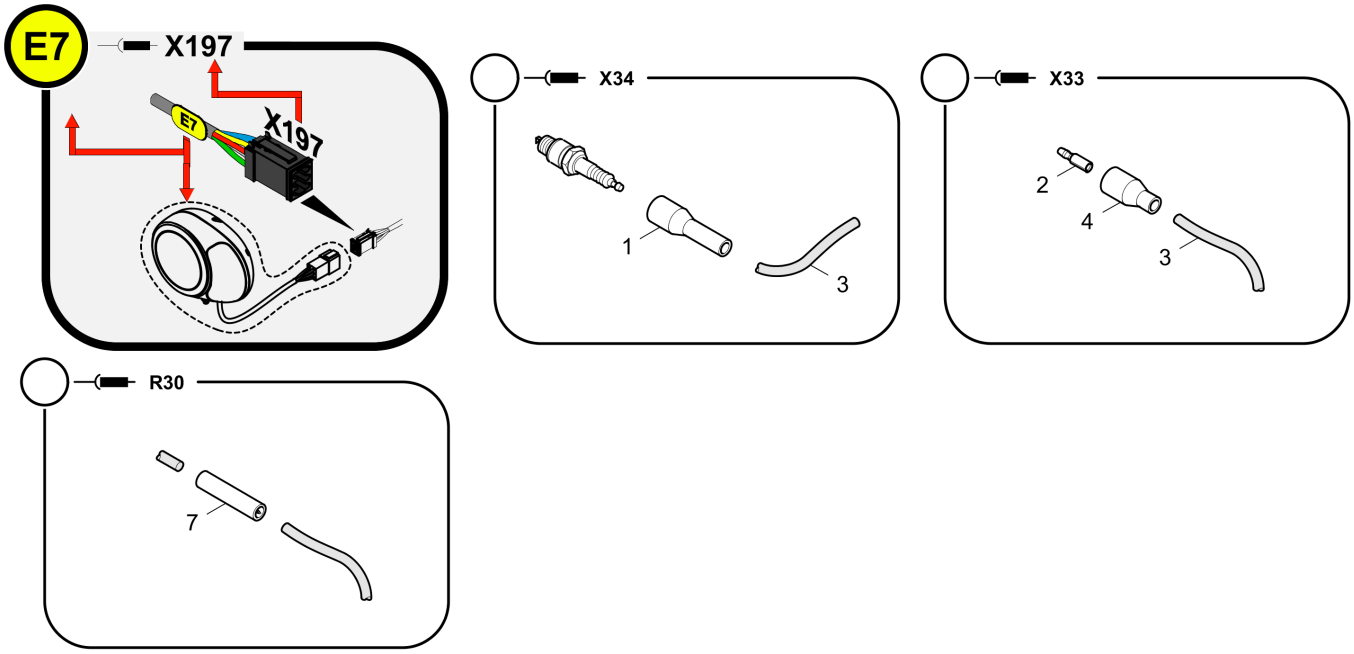

Item	Part No.	Name	Qty	L	C	SN INFO
1	D977058582	Spark plug connector	1			
2	4749100758	Sleeve	1			
3	4749110086	Ignition cable x m	2			
4	4749100759	Rubber	1			
7	4812078451	Resistor	1			

Harness 4812018852 Ignition cable, W23

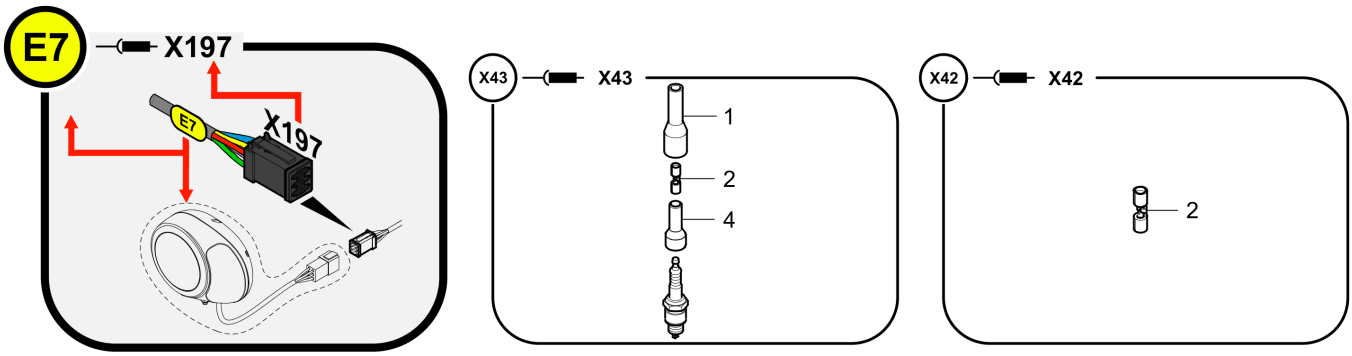

Item	Part No.	Name	Qty	L	C	SN INFO
1	D977058582	Spark plug connector	1			
2	4749100758	Sleeve	1			
4	4749100759	Rubber	1			

Harness 4812078640 Harness W23

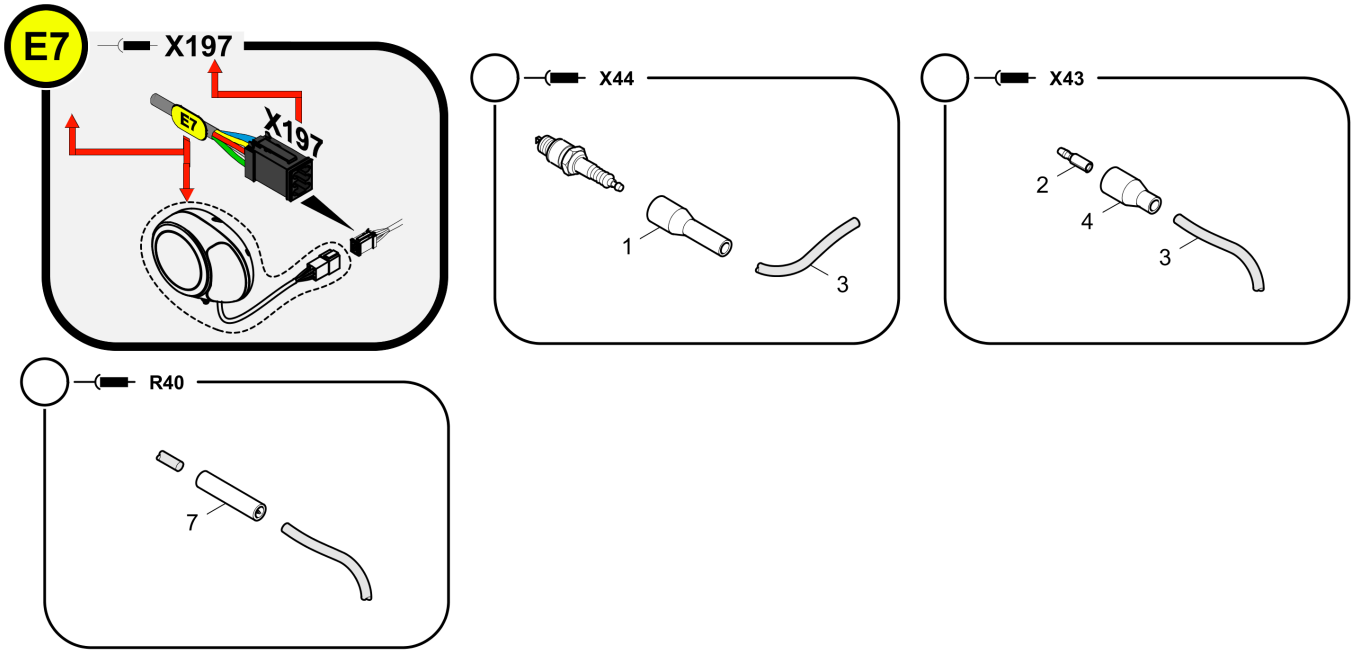

Item	Part No.	Name	Qty	L	C	SN INFO
1	D977058582	Spark plug connector	1			
2	4749100758	Sleeve	1			
3	4749110086	Ignition cable x m	2			
4	4749100759	Rubber	1			
7	4812078451	Resistor	1			

Referenced Pages

4812215555 Harness W11 164

Remote control 4812016618 Remote control

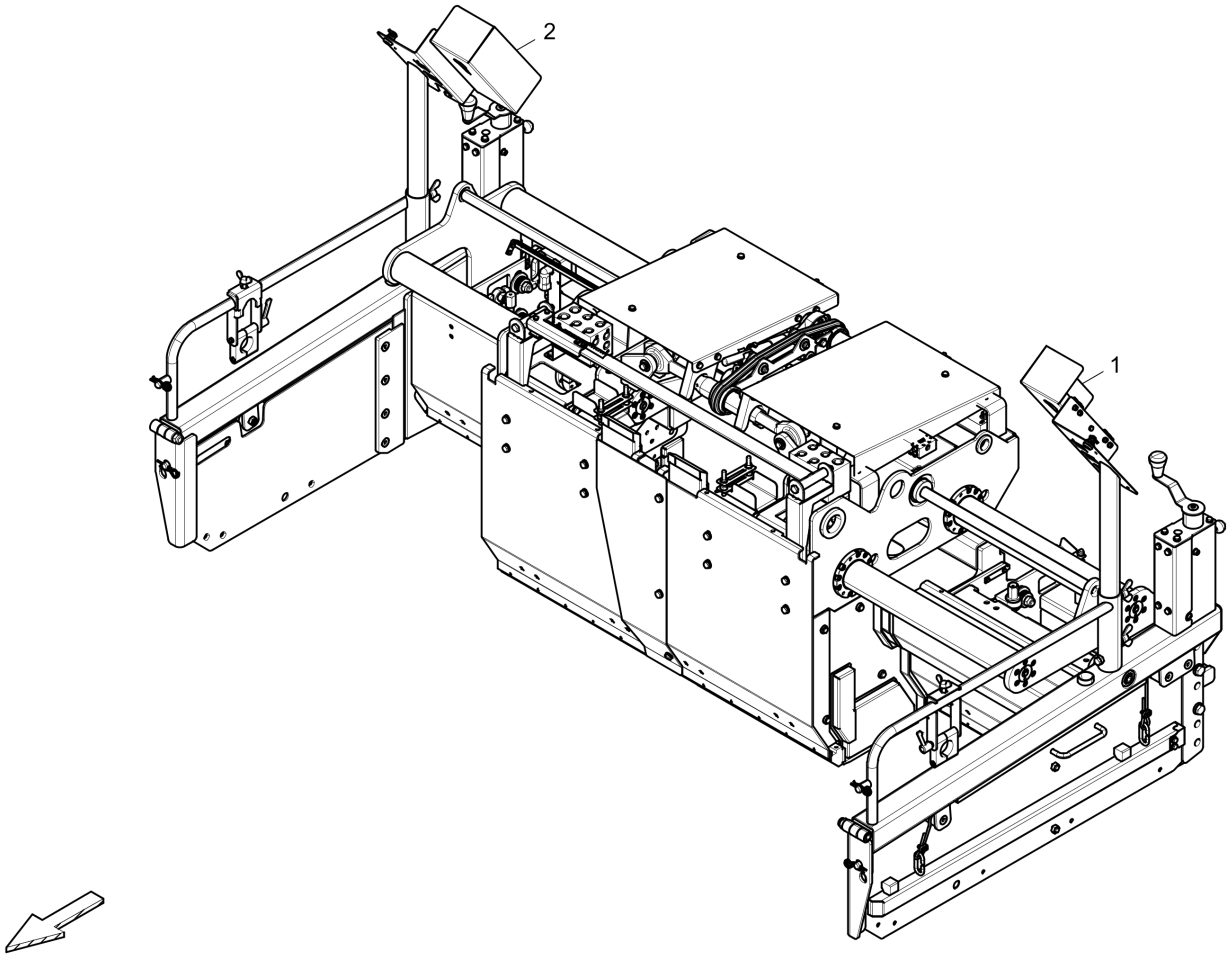

Item	Part No.	Name	Qty	L	C	SN INFO
1	4812016658	Remote control, l.h.	1			
2	4812016659	Remote control, r.h.	1			

Remote control, l.h. 4812016658 Remote control, l.h.

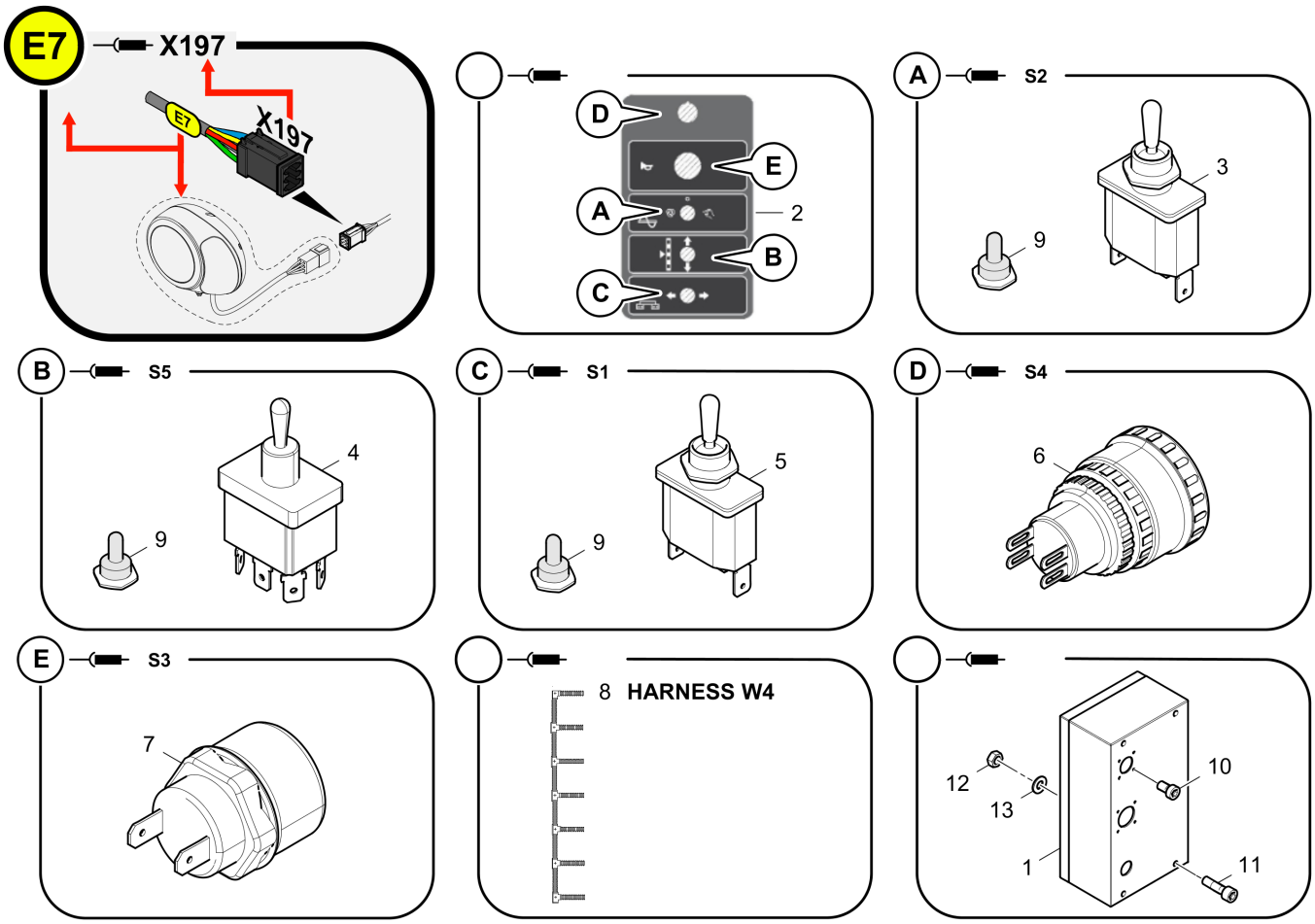

Item	Part No.	Name	Qty	L	C	SN INFO
1	4812202113	Housing, l.h.	1			
2	4812016657	Foil stickers	1			
3	D977532034	Toggle switch	1			
4	D977532030	Toggle switch	1			
5	D977532018	Toggle switch	1			
6	4812030283	Push-button key	1			
7	D977514020	Push button	1			
8	4812018913	Harness W4	1			
9	4812075374	Sealing cap	3			
10	D937932062	Screw	8			
11	0211125103	Screw M6X35	4			
12	5730015118	Hexagon nut	4			
13	0333310055	Washer	4			

Referenced Pages

4812018913 Harness W4 171

Remote control, r.h. 4812016659 Remote control, r.h.

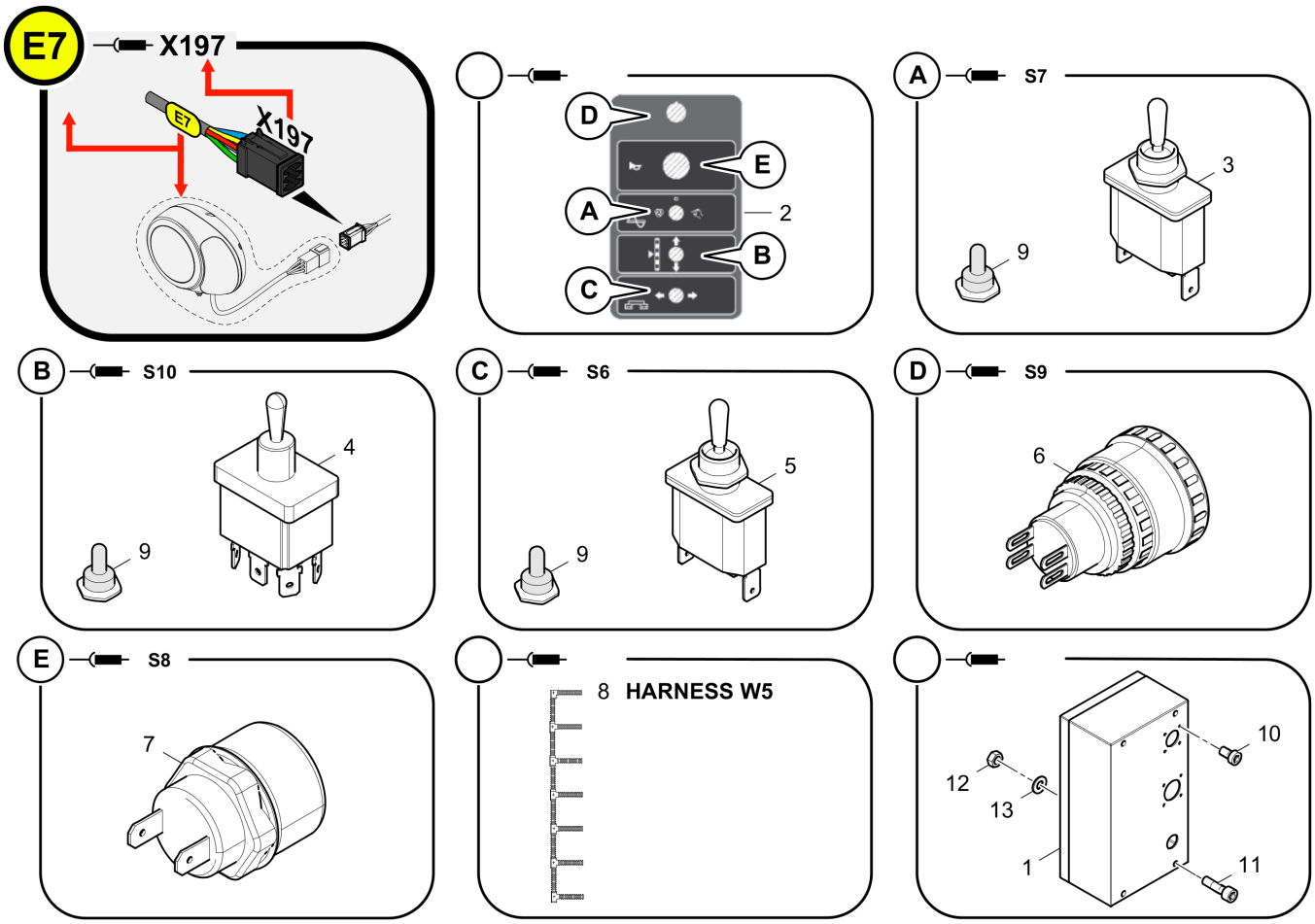

Item	Part No.	Name	Qty	L	C	SN INFO
1	4812202114	Housing, r.h.	1			
2	4812016657	Foil stickers	1			
3	D977532034	Toggle switch	1			
4	D977532030	Toggle switch	1			
5	D977532018	Toggle switch	1			
6	4812030283	Push-button key	1			
7	D977514020	Push button	1			
8	4812018962	Harness W5	1			
9	4812075374	Sealing cap	3			
10	D937932062	Screw	8			
11	0211125103	Screw M6X35	4			
12	5730015118	Hexagon nut	4			
13	0333310055	Washer	4			

Referenced Pages

4812018962 Harness W5 172

Mounting parts 4812016173 Mounting parts

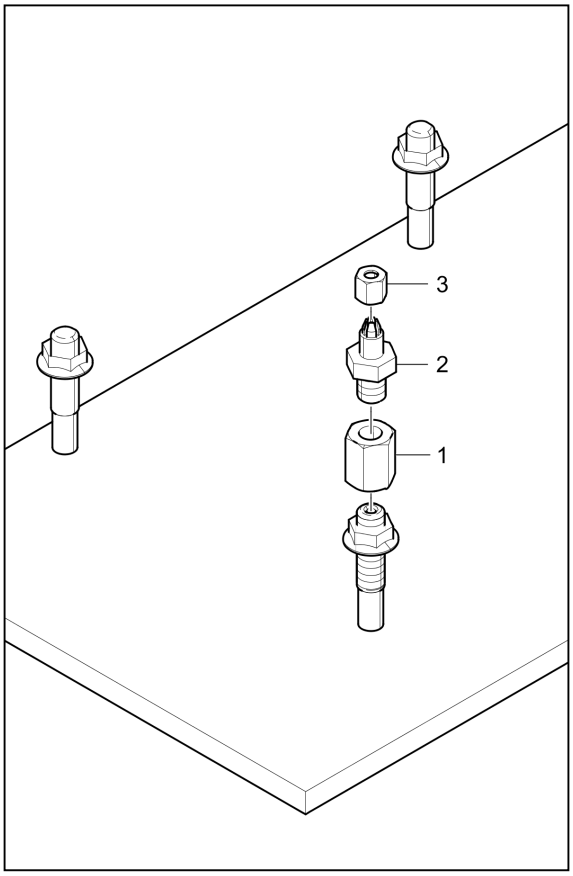

Item	Part No.	Name	Qty	L	C	SN INFO
1	4812010762	Adapter	1			
2	D431309003	Screwing	1			
3	D961102003	Nut	1			

Extension cable W1, con. 4812018970 Extension cable W1, con.

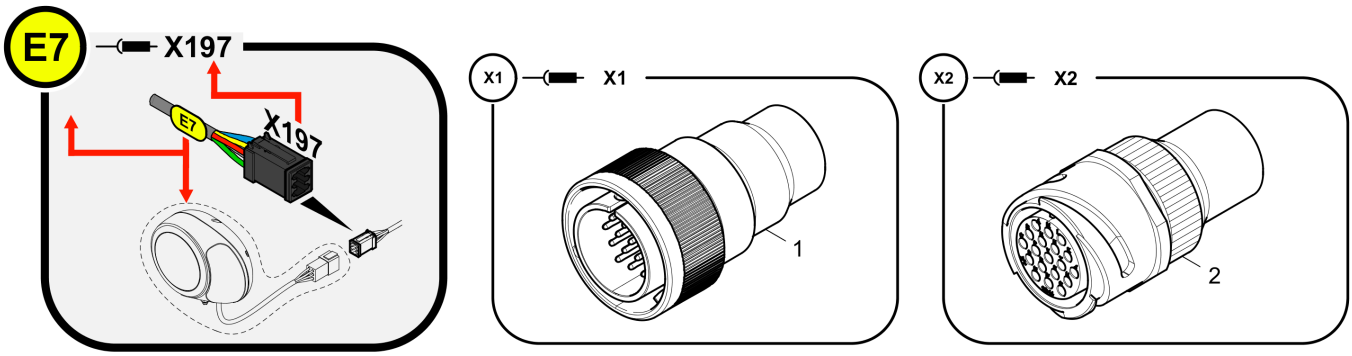

Item	Part No.	Name	Qty	L	C	SN INFO
1	4812073667	Plug	1			
2	4812075978	Plug	1			

Electric 4812074002 Electric

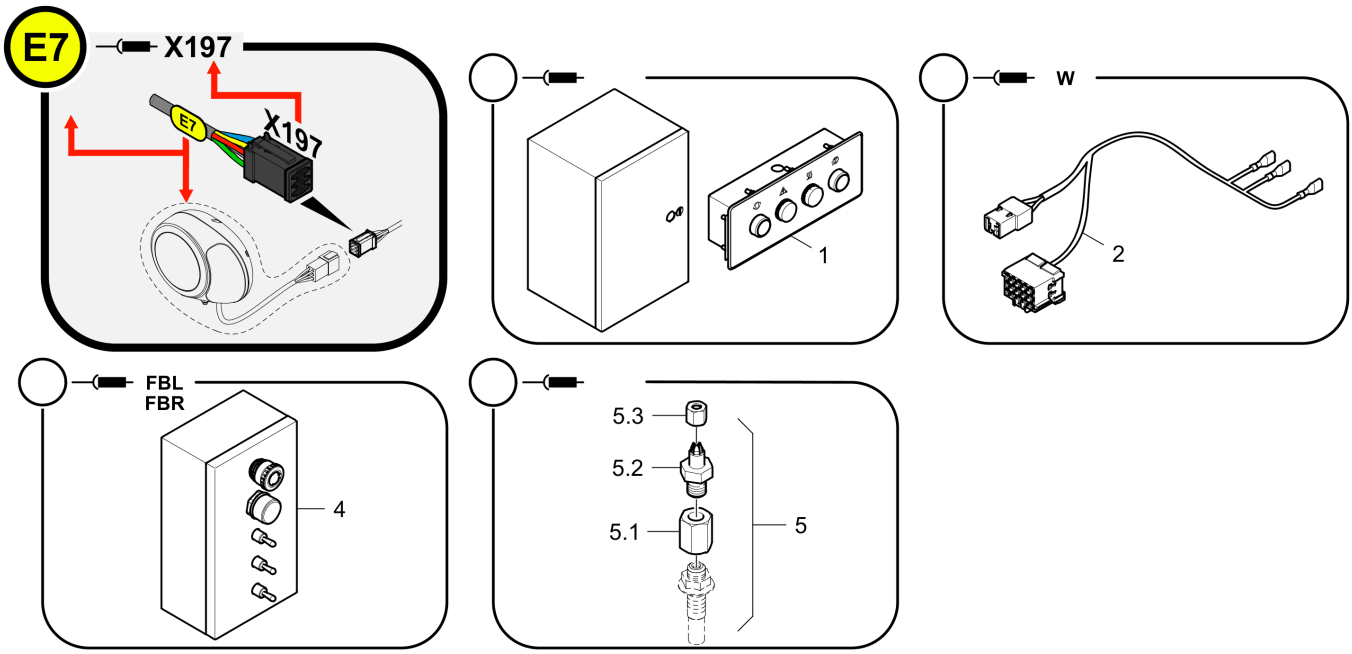

Item	Part No.	Name	Qty	L	C	SN INFO
1	4812016264	Electric	1			
2	4812073498	Wiring	1			
4	4812016618	Remote control	1			
5	4812016262	Mounting parts	1			
5.1	4812010762	Adapter	1			
5.2	D431309003	Screwing	1			
5.3	D961102003	Nut	1			

Control panel 4812016264 Electric

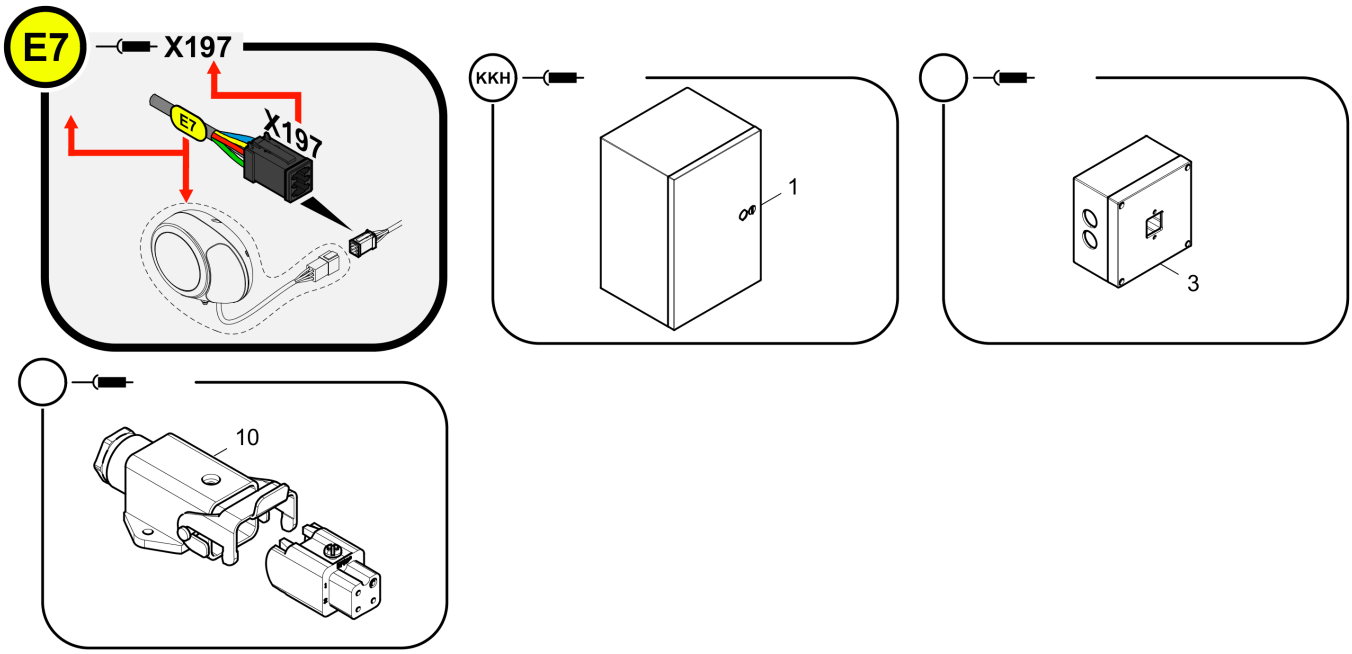

Item	Part No.	Name	Qty	L	C	SN INFO
1	4812202643	Junction box				
3	4812072301	Electric, heating	1			
10	4812018114	Electric, tamper				

Junction box 4812202643 Junction box

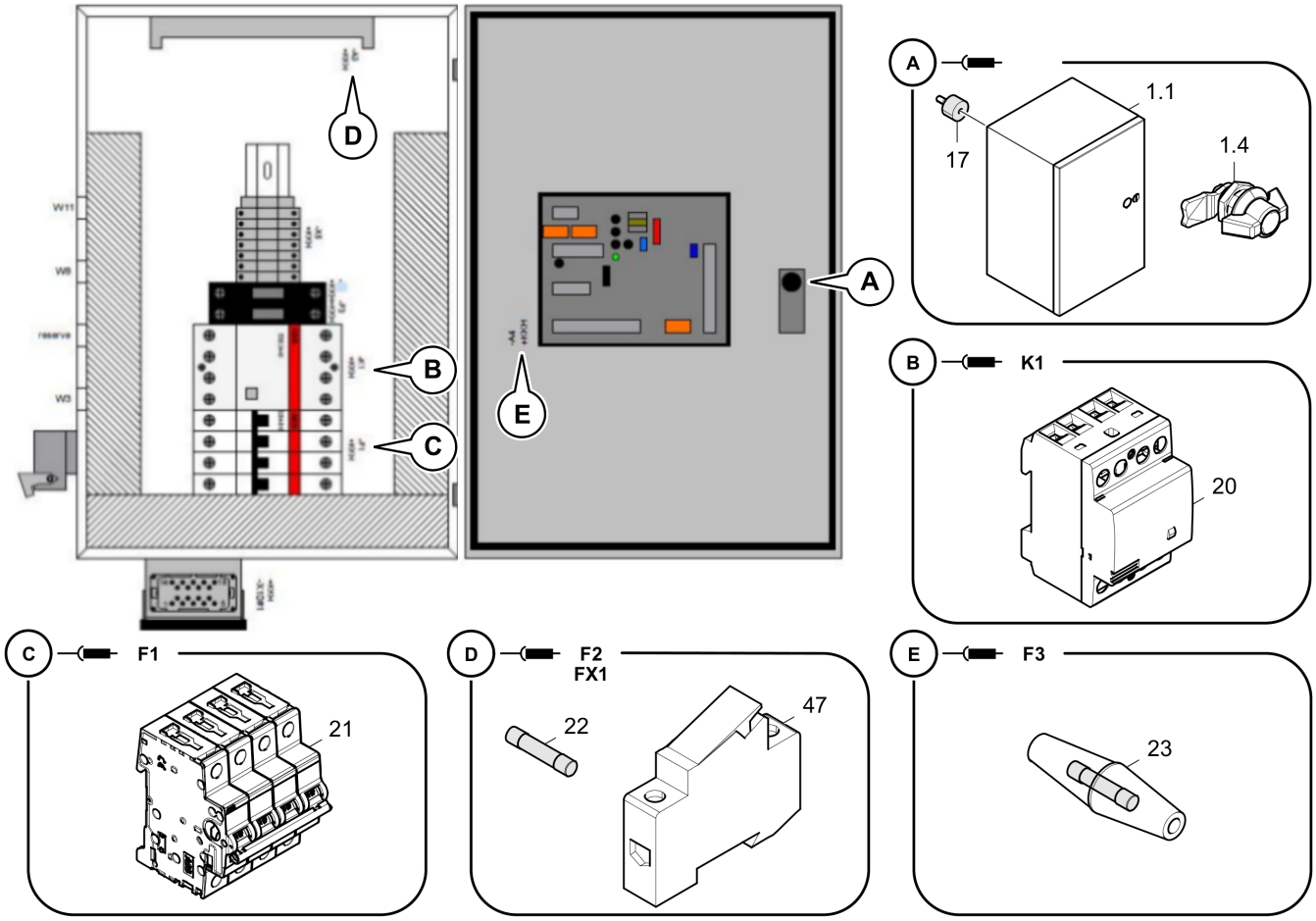

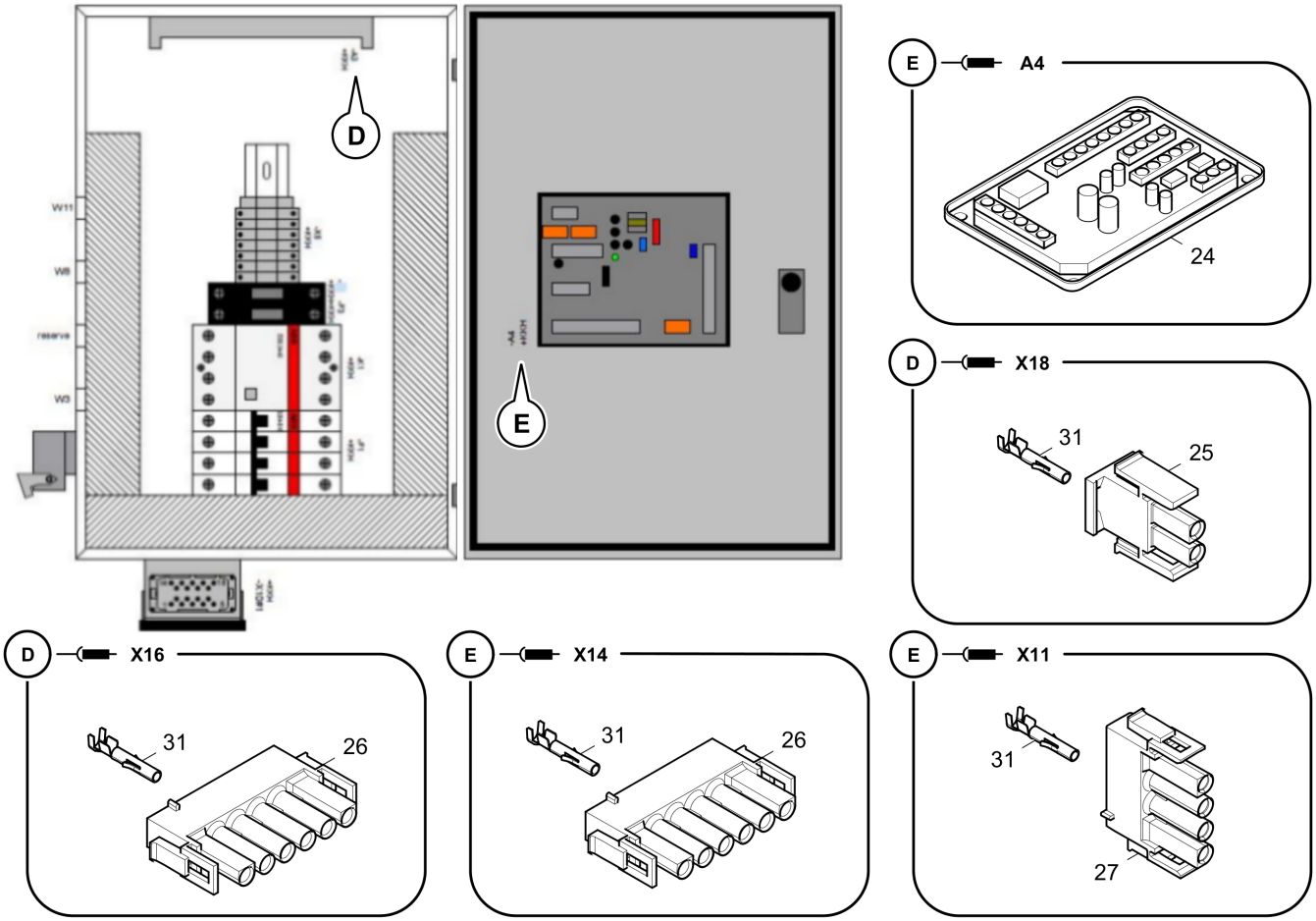
D
E
W11
W8
reserve
W3
E A4
24
D X18
31
25
D X16
31
26
E X14
31
26
E X11
31
27

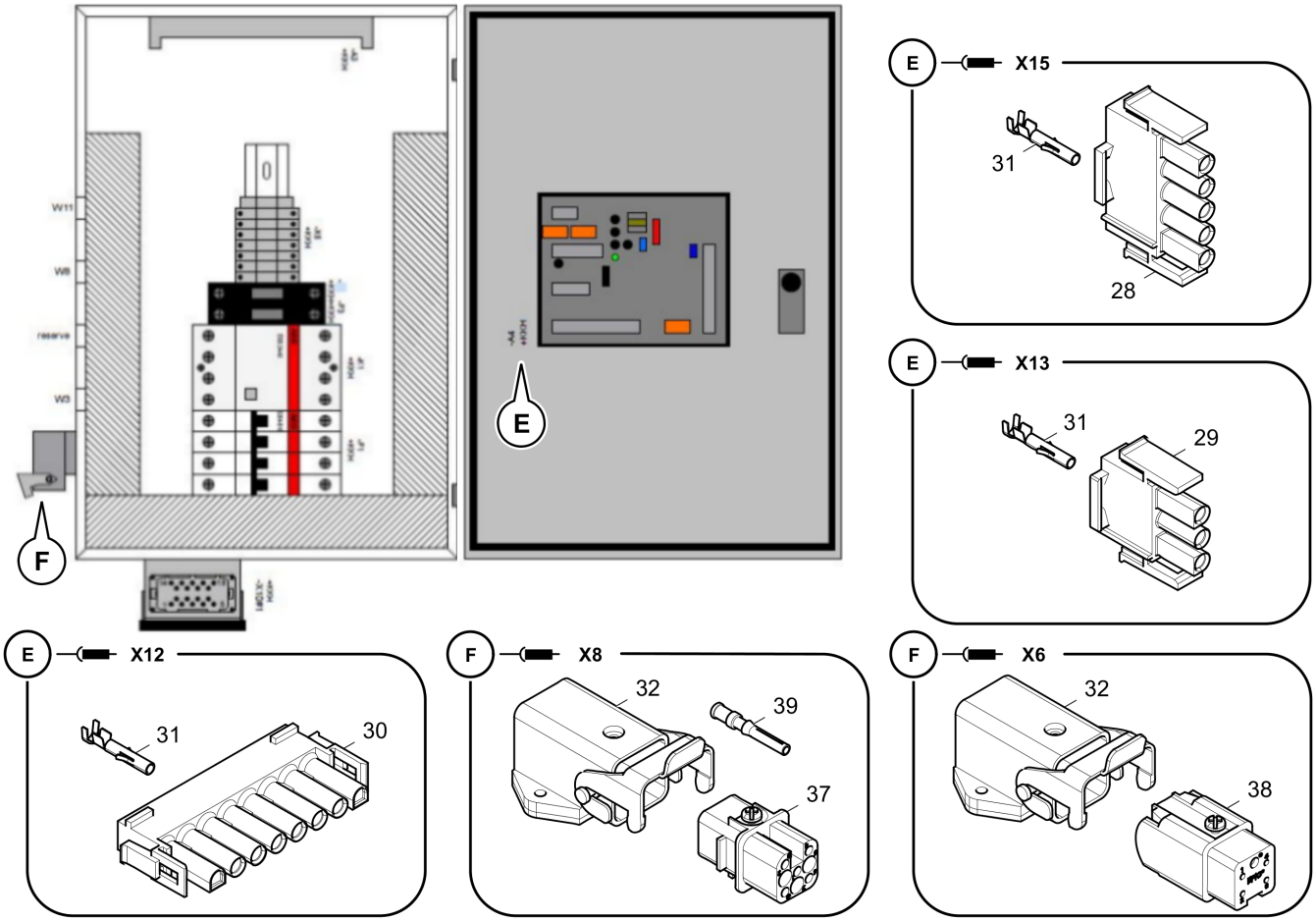
W11
W8
reserve
W3
F
E
E X15
31
28
E X13
31
29
E X12
31
30
F X8
32
39
37
F X6
32
38

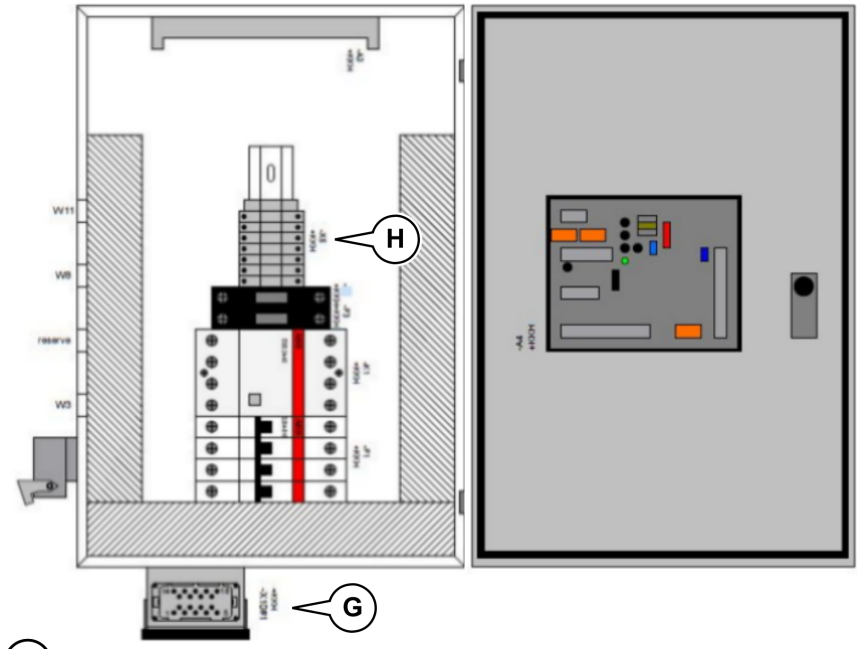

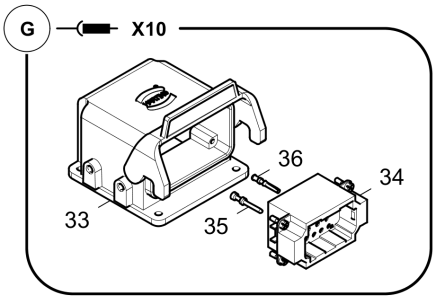

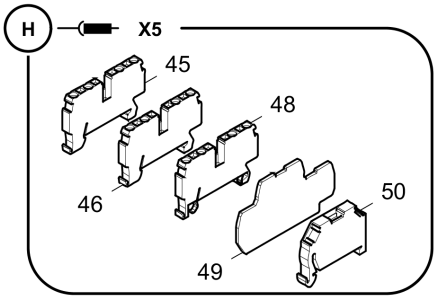

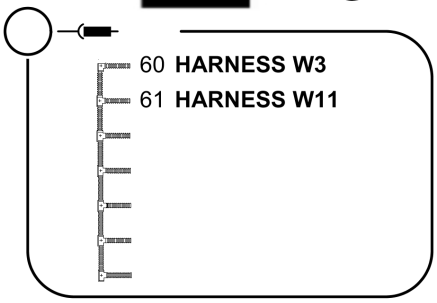

Item	Part No.	Name	Qty	L	C	SN INFO
1	4812202645	Junction box	1			
1.1	4812216513	Housing	1			
1.4	4812075615	Slide lock	1			
1.4.1	4812075470	Slide lock	1			
1.4.2	4812075474	Switch	1			
17	4812073918	Rubber buffer	4			
20	4812078440	Contactor	1			
21	D977455784	Overload release	1			
22	4812202011	Fuse	1			
23	4812217870	Fuse	1			
24	4812217849	Earth leakage monitor	1			
25	4812035470	Plug housing 2-pin	1			
26	4812035472	Plug housing	2			
27	4812217860	Connector housing	1			
28	4812035685	Plug	1			
29	4812035471	Connector housing	1			
30	4812018936	Connector housing	1			

Item	Part No.	Name	Qty	L	C	SN INFO
31	4812035509	Female contact	22			
32	D977463154	Mounting box	2			
33	4812216507	Socket housing	1			
34	4812216509	Insert	1			
35	4812216562	Male contact	7			
36	4812216563	Male contact	5			
37	D977463175	Socket contact	1			
38	4812073879	Insert	1			
39	D977463107	Female contact	7			
45	D977425147	Through clamp	3			
46	4812042983	Through clamp	2			
47	4812034089	Fuse clamp	2			
48	D977425148	Through clamp	2			
49	4812012702	Cover plate	1			
50	D977425146	End clamp	1			
60	4812216556	Harness W3	1			
61	4812071058	Harness W11	1			

Harness 4812216556 Harness W3

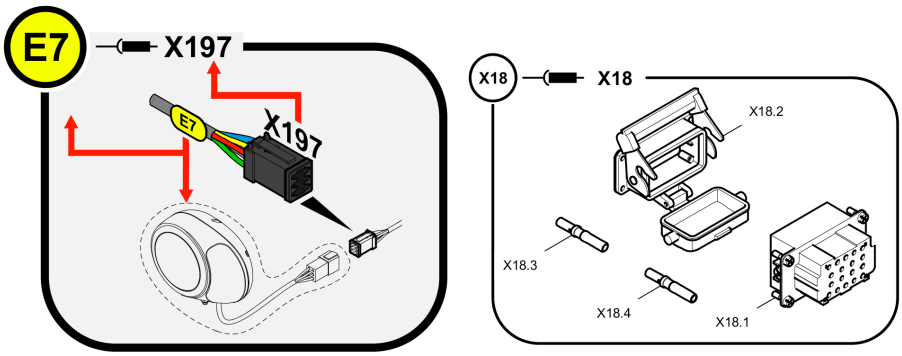

Item	Part No.	Name	Qty	L	C	SN INFO
X18	.....	Electrical components			X18 - X18	
X18.1	4812216508	Insert	1			
X18.2	4812216510	Socket housing	1			
X18.3	4812216543	Male contact	10			
X18.4	4812216558	Male contact	2			

Harness 4812071058 Harness W11

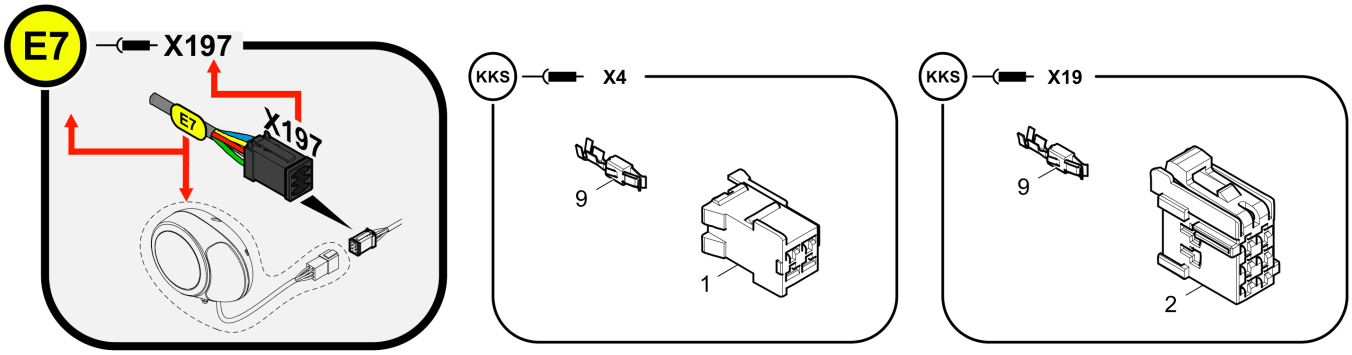

Item	Part No.	Name	Qty	L	C	SN INFO
1	4812029304	Power-timer housing	1			
2	4812029218	Power-timer housing	1			
9	4812030987	Female contact	5			

Electric, heating 4812072301 Electric, heating

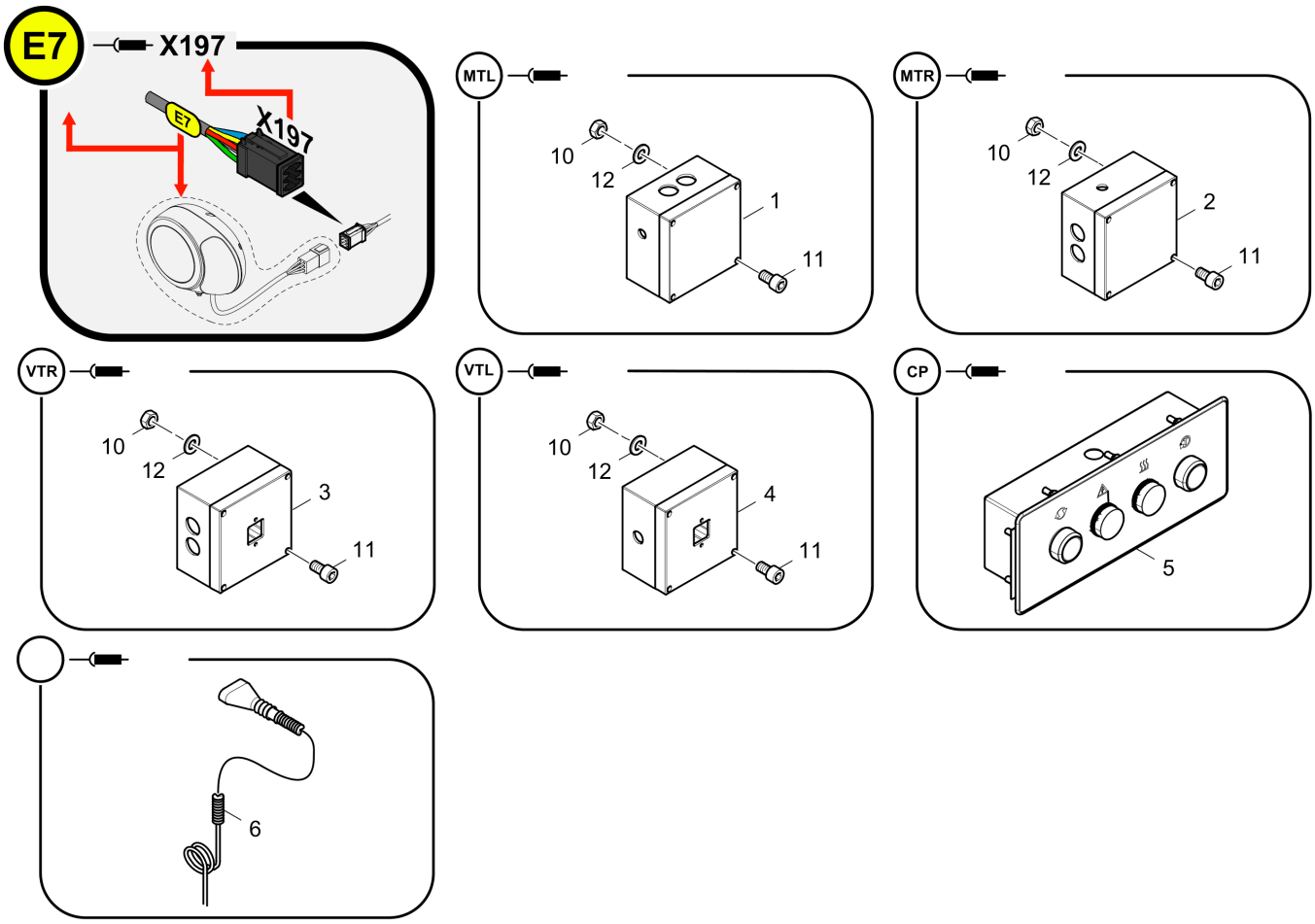

Item	Part No.	Name	Qty	L	C	SN INFO
1	4812216626	Housing, MT l.h.	1			
2	4812216630	Housing, MT r.h.	1			
3	4812216641	Housing, VT r.h.	1			
4	4812216643	Housing, VT l.h.	1			
5	4812202653	Control panel				
6	4812018096	Resistance thermometer	1			
10	0266210700	Nut	10			
11	0211117403	Cap screw	16			
12	4812234041	Washer	10			

Housing 4812216626 Housing, MT l.h.

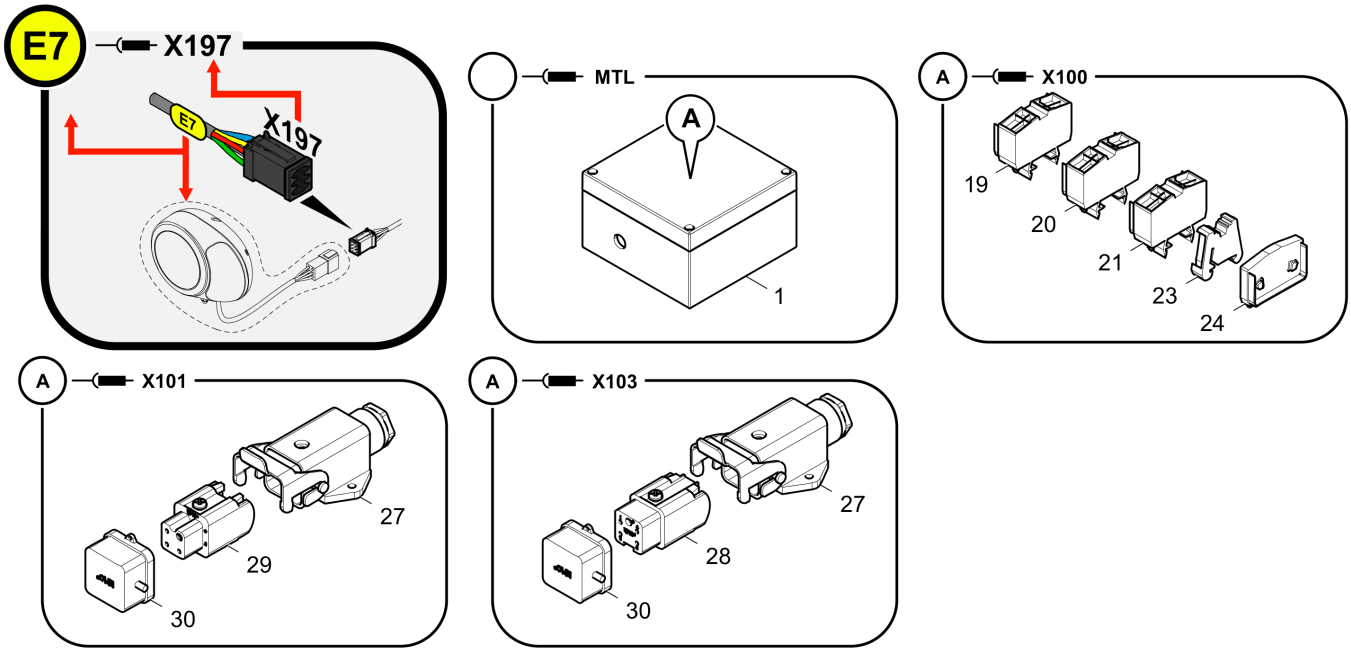

Item	Part No.	Name	Qty	L	C	SN INFO
1	4812216639	Housing	1			
19	D977425117	Through clamp	3			
20	D977425118	Through clamp	1			
21	D977425119	Through clamp	1			
23	D977425123	End clamp	2			
24	D977425121	End plate	1			
27	D977463182	Mounting box	2			
28	D977463175	Socket contact	1			
29	D977463153	Insert	1			
30	D977478247	Dust cap	2			

Housing 4812216630 Housing, MT r.h.

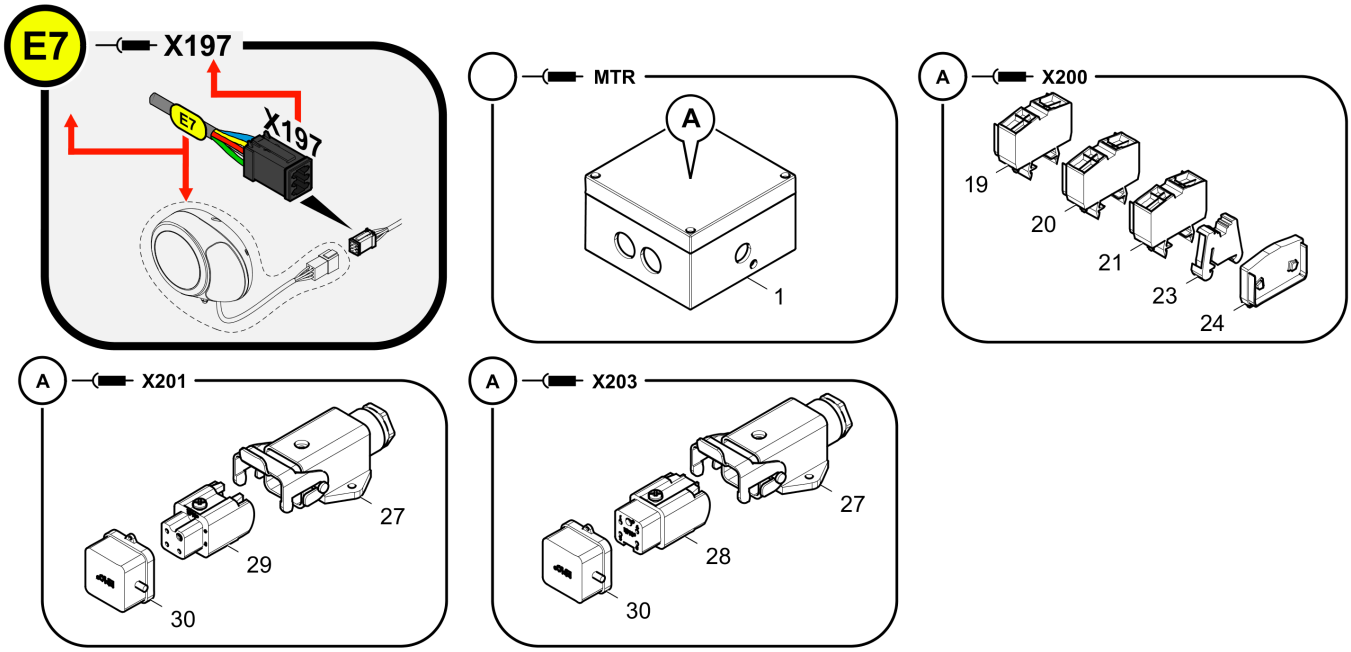

Item	Part No.	Name	Qty	L	C	SN INFO
1	4812216640	Housing	1			
19	D977425117	Through clamp	3			
20	D977425118	Through clamp	1			
21	D977425119	Through clamp	1			
23	D977425123	End clamp	2			
24	D977425121	End plate	1			
27	D977463182	Mounting box	2			
28	D977463175	Socket contact	1			
29	D977463153	Insert	1			
30	D977478247	Dust cap	2			

Housing 4812216641 Housing, VT r.h.

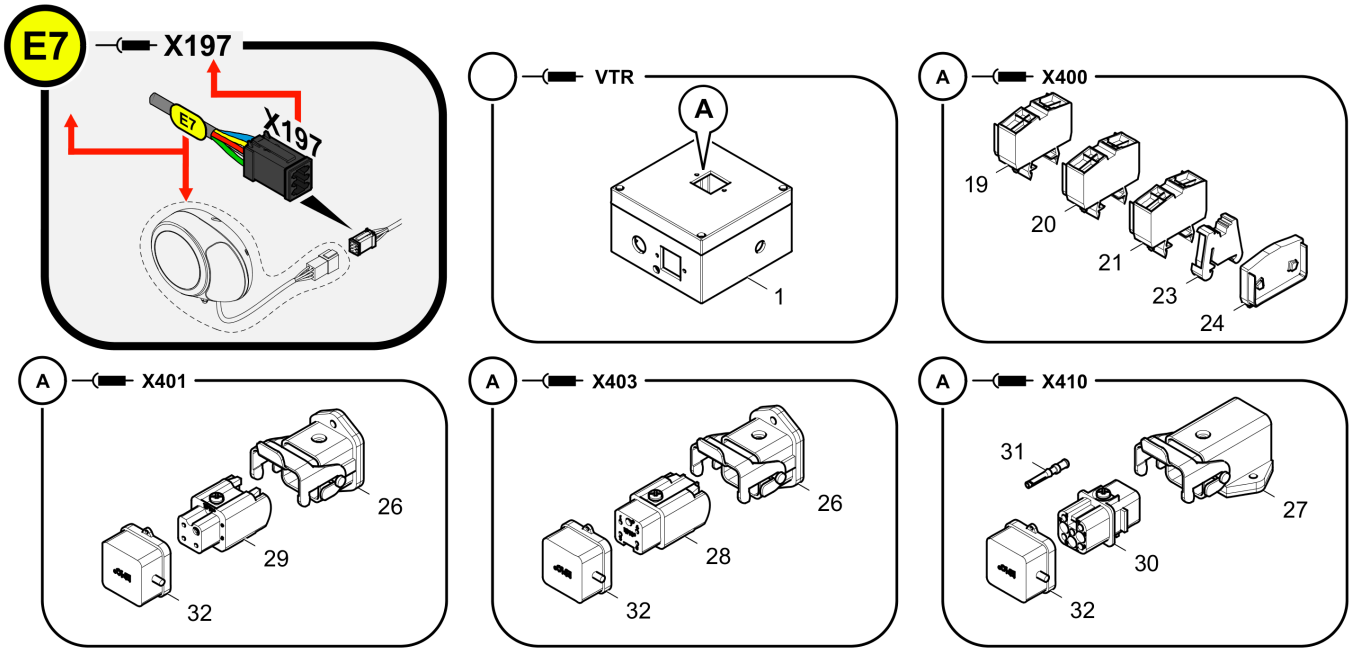

Item	Part No.	Name	Qty	L	C	SN INFO
1	4812216652	Housing	1			
19	D977425117	Through clamp	3			
20	D977425118	Through clamp	1			
21	D977425119	Through clamp	1			
23	D977425123	End clamp	2			
24	D977425121	End plate	1			
26	D977463152	Mounting box	2			
27	D977463154	Mounting box	1			
28	D977463175	Socket contact	1			
29	D977463153	Insert	1			
30	D977463177	Insert	1			
31	D977463107	Female contact	7			
32	D977478247	Dust cap	3			

Housing 4812216643 Housing, VT l.h.

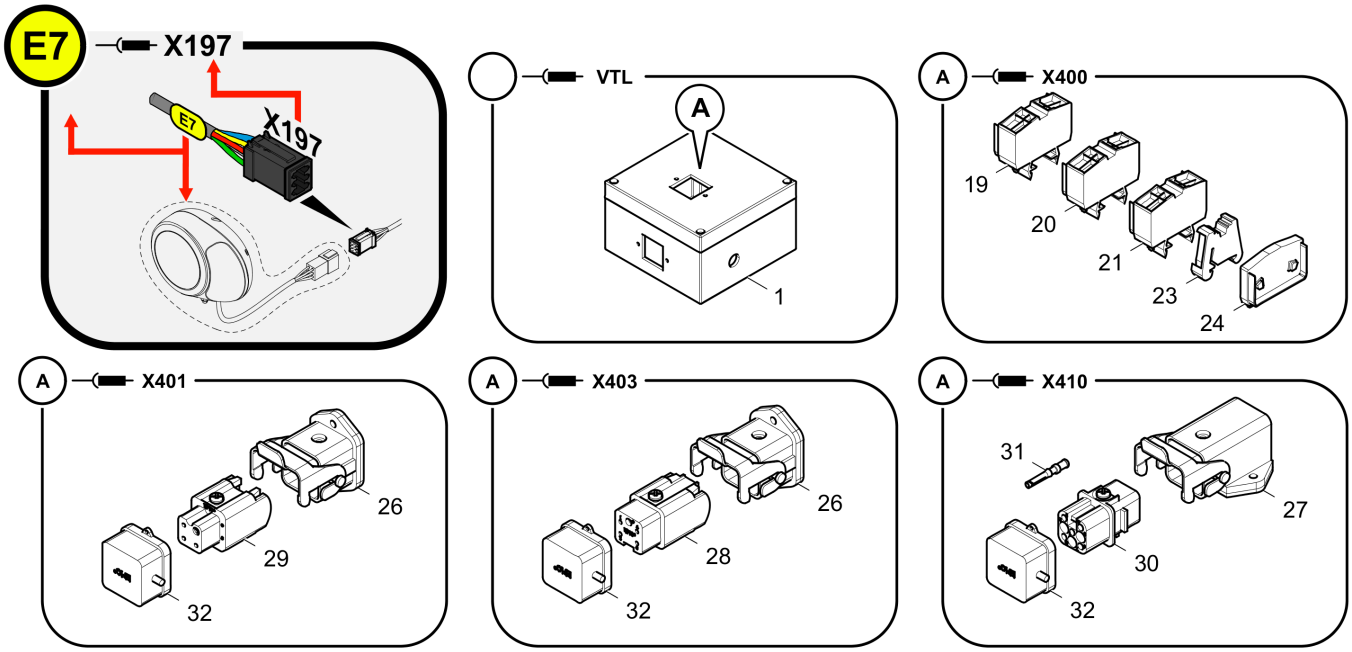

Item	Part No.	Name	Qty	L	C	SN INFO
1	4812216651	Housing	1			
19	D977425117	Through clamp	3			
20	D977425118	Through clamp	1			
21	D977425119	Through clamp	1			
23	D977425123	End clamp	2			
24	D977425121	End plate	1			
26	D977463152	Mounting box	2			
27	D977463154	Mounting box	1			
28	D977463175	Socket contact	1			
29	D977463153	Insert	1			
30	D977463177	Insert	1			
31	D977463107	Female contact	7			
32	D977478247	Dust cap	3			

Control panel 4812202653 Control panel

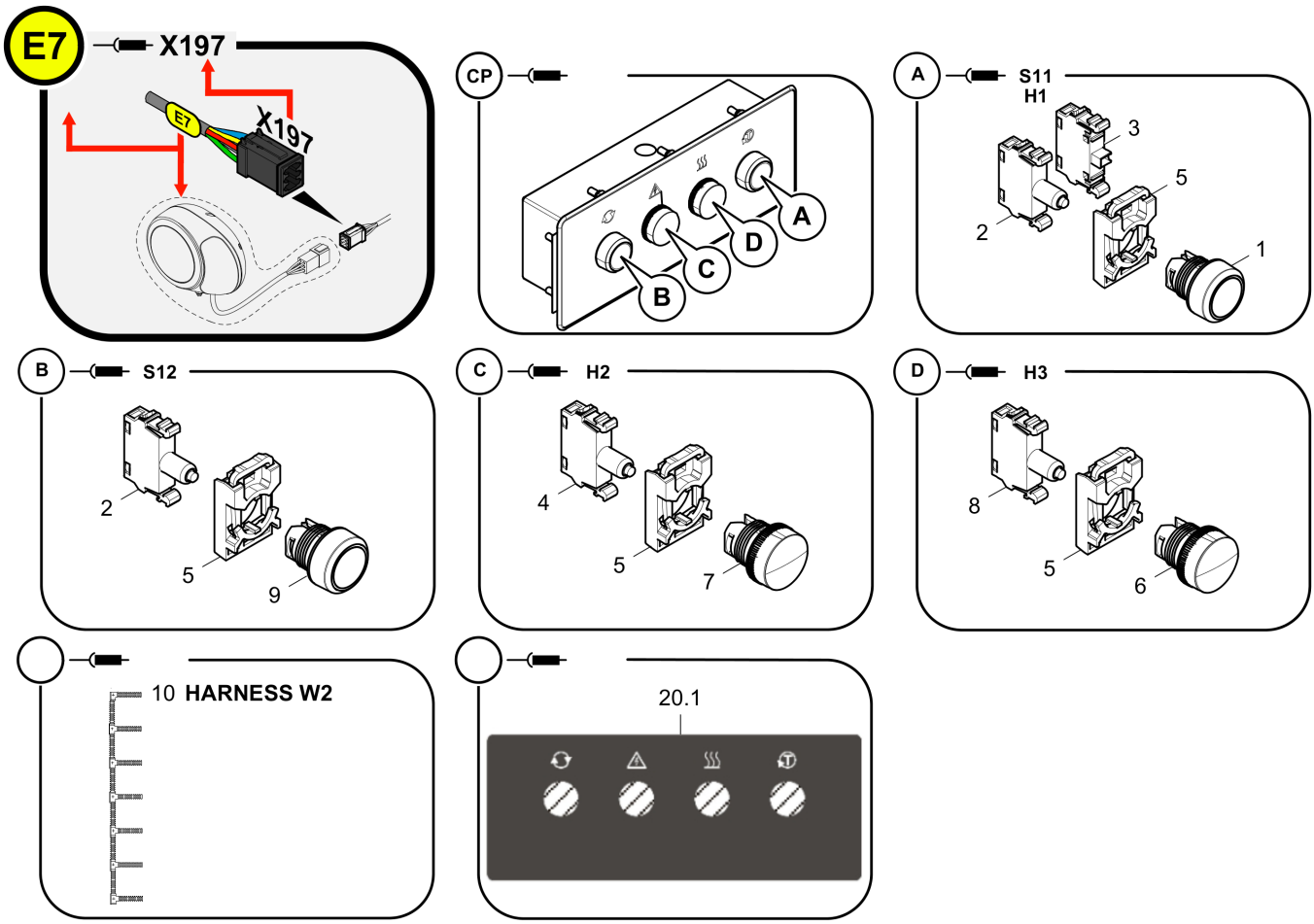

Item	Part No.	Name	Qty	L	C	SN INFO
1	D977580287	Push button, red	1			
2	4812074913	Lamp base, red	1			
3	D977580291	Contact	1			
4	4812074901	Lamp base, green	1			
5	D977580293	Retainer	4			
6	D977580296	Signal light, yellow	1			
7	D977580297	Signal light, green	1			
8	4812074912	Lamp base, yellow	1			
9	D977580288	Push button	1			
10	4812202602	Harness W2	1			
20	4812215578	Instrument panel	1			
20.1	4812215636	Foil stickers	1			

Control panel 4812202602 Harness W2

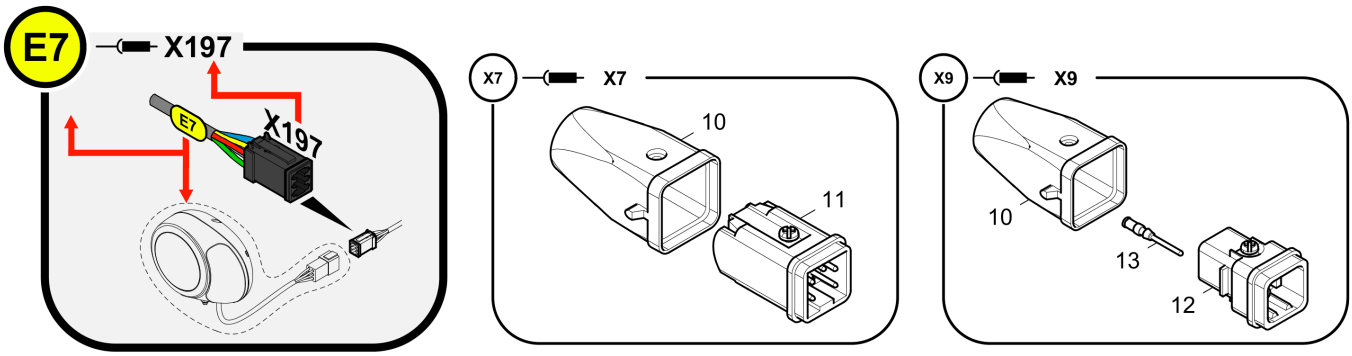

Item	Part No.	Name	Qty	L	C	SN INFO
10	4812045618	Socket shell	2			
11	D977463174	Pin contact	1			
12	4812073878	Plug insert	1			
13	D977463117	Male contact	7			

Electric, tamper 4812018114 Electric, tamper

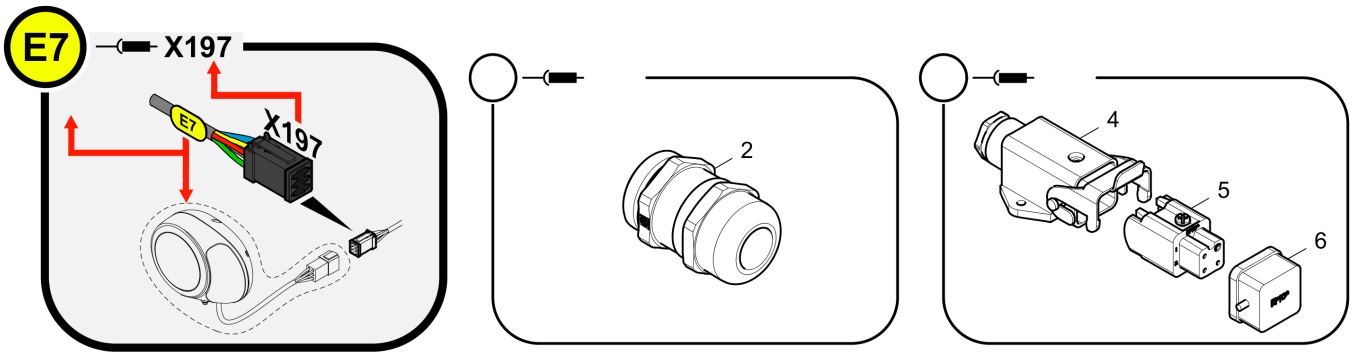

Item	Part No.	Name	Qty	L	C	SN INFO
2	4812035904	Cable union	1			
4	D977463182	Mounting box	1			
5	D977463153	Insert	1			
6	D977478247	Dust cap	1			

Wiring 4812073498 Wiring

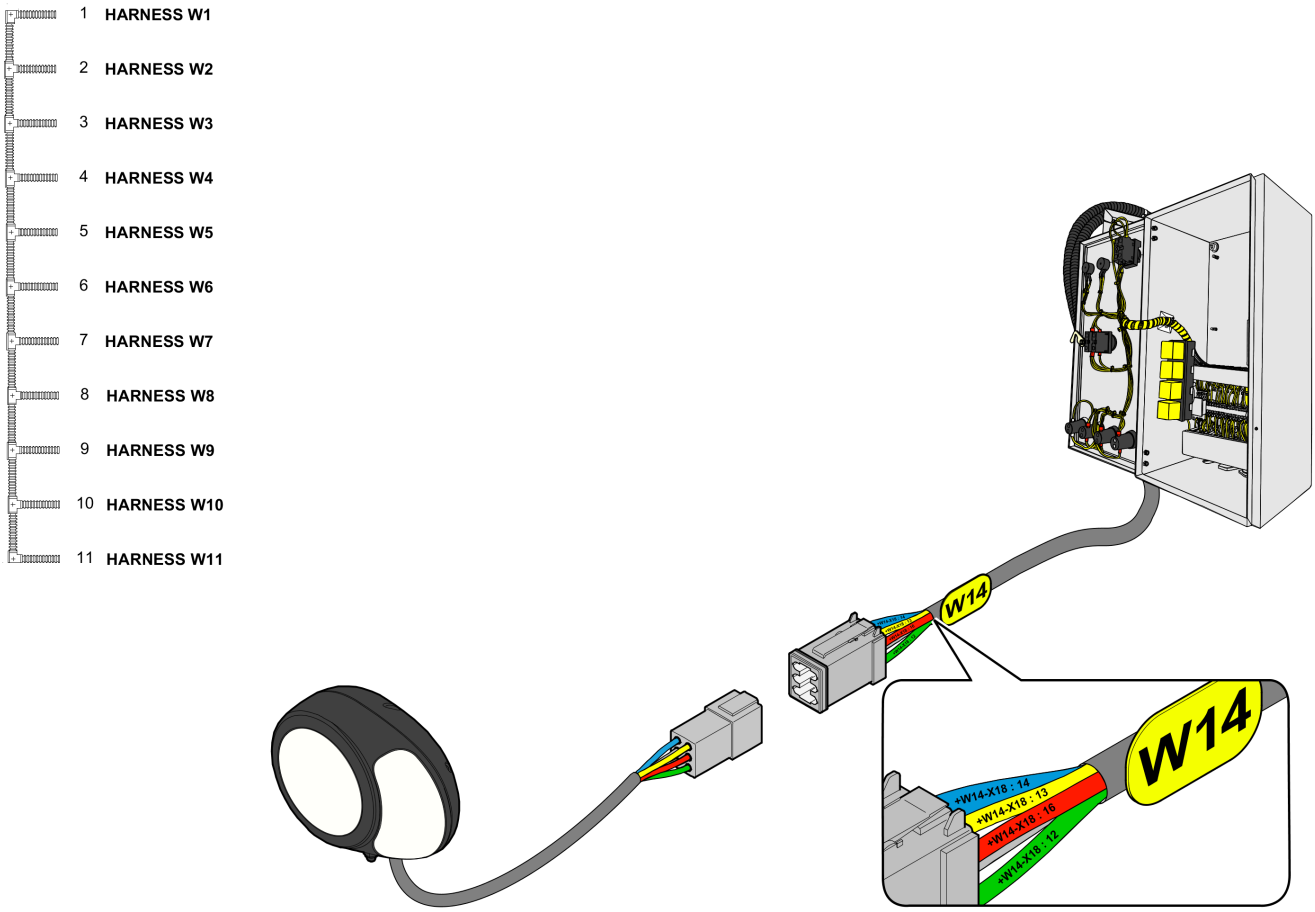

Item	Part No.	Name	Qty	L	C	SN INFO
1	4812073494	Harness W1	1			
2	4812202602	Harness W2				
3	4812216556	Harness W3				
4	4812018913	Harness W4				
5	4812018962	Harness W5				
6	4812012881	Harness W6				
7	4812012882	Harness W7				
8	4812202646	Harness W8				
9	4812013262	Harness W9				
10	4812018961	Harness W10				
11	4812071058	Harness W11				

Harness 4812073494 Harness W1

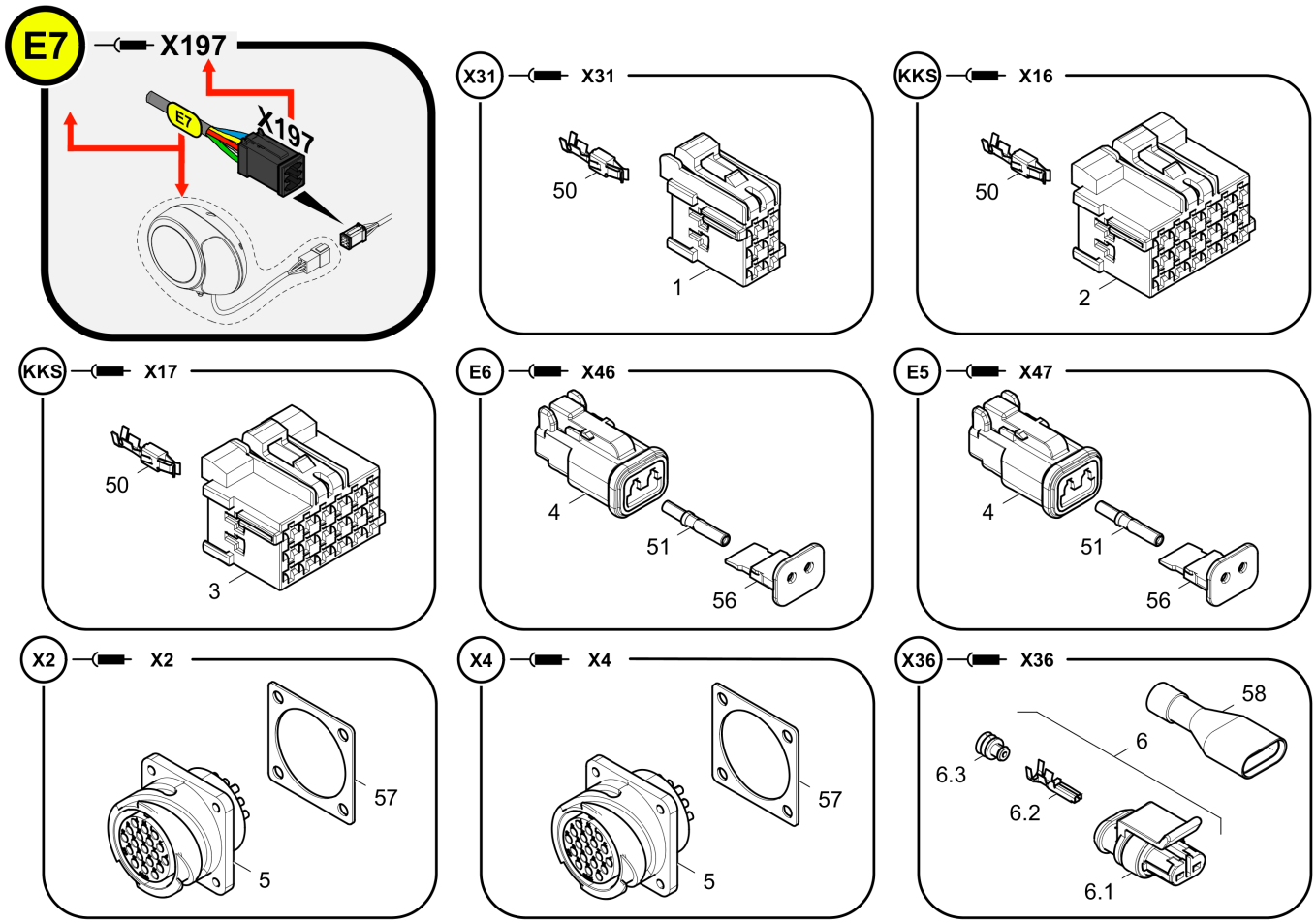

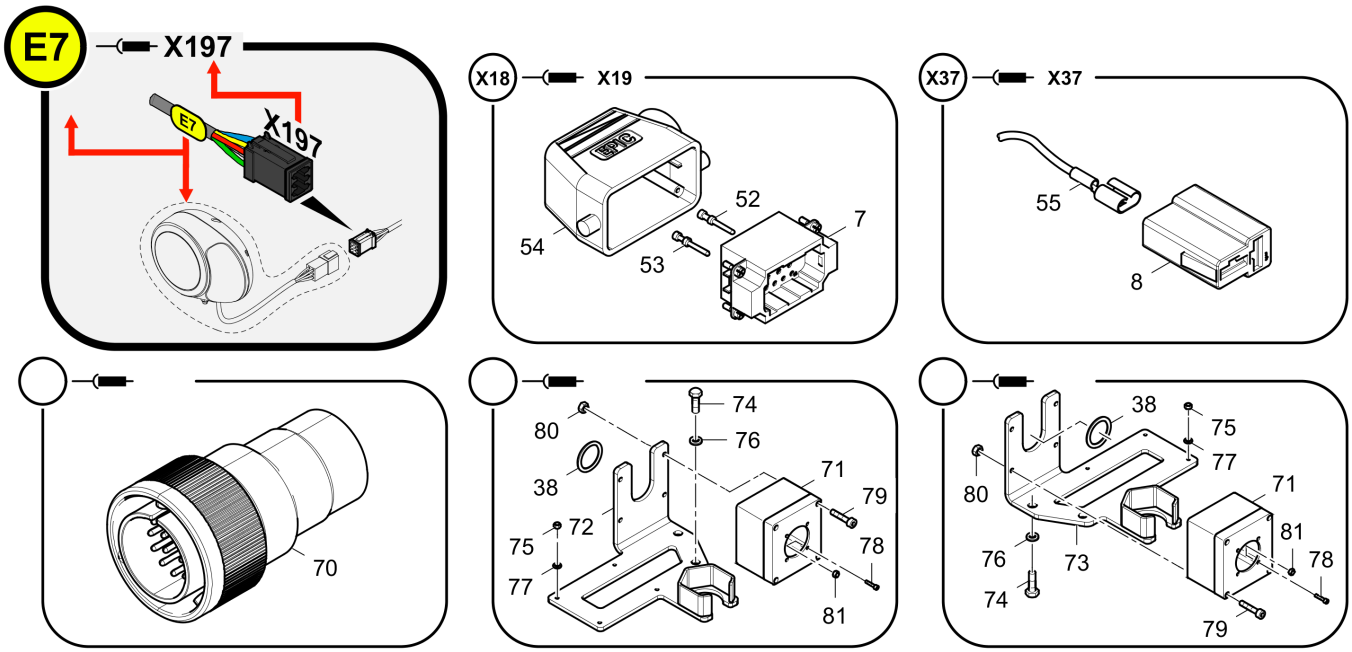

Item	Part No.	Name	Qty	L	C	SN INFO
1	4812046267	Power timer housing	1			
2	4812046157	Power-timer housing	1			
3	4812035131	Power-timer housing	1			
4	D977466134	Socket shell	2			
5	4812073632	Plug	2			
6	D977477184	Plug	1			
6.1	D977477102	Socket shell	1			
6.2	D977478301	Socket contact	2			
6.3	D977478231	Sealing	2			
7	4812216509	Insert	1			
8	D977330125	Female housing	1			
38	4812076773	Gasket	2			
50	4812030987	Female contact	42			
51	D977466144	Socket contact	4			
52	4812216562	Male contact	2			
53	D977463119	Male contact	10			
54	4812216547	Socket shell	1			

Item	Part No.	Name	Qty	L	C	SN INFO
55	D977397117	Receptacle for tabs	2			
56	D977466137	Key	2			
57	D977416567	Sealing	2			
58	D977418050	Rubber grommet	1			
70	4812016674	Dummy plug	2			
71	4812076800	Socket enclosure	2			
72	4812063187	Retainer, l.h.	1			
73	4812063189	Retainer, r.h.	1			
74	0147132303	Hexagon bolt	4			
75	0266210600	Hexagon nut	8			
76	0333310050	Lock washer	4			
77	4812202818	Lock washer	8			
78	4812072960	Cap screw	8			
79	0211117303	Slotted screw	4			
80	4812071486	Hexagon nut	4			
81	D938501002	Nut	8			

Harness 4812202646 Harness W8

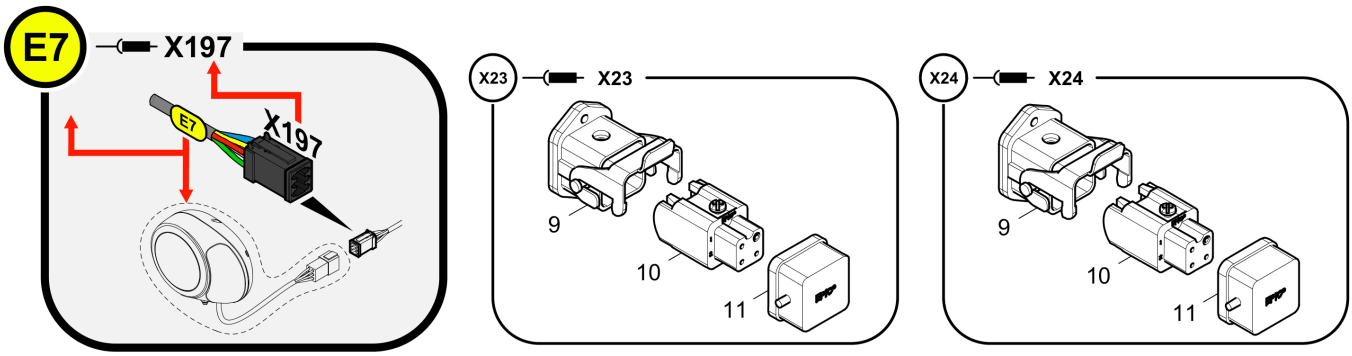

Item	Part No.	Name	Qty	L	C	SN INFO
9	D977463152	Mounting box	2			
10	D977463153	Insert	2			
11	D977478247	Dust cap	2			

Referenced Pages

4812202602 Harness W2 204
4812216556 Harness W3 196
4812018913 Harness W4 171
4812018962 Harness W5 172
4812012881 Harness W6 108
4812012882 Harness W7 115
4812013262 Harness W9 124
4812018961 Harness W10 134
4812071058 Harness W11 197

Referenced Pages

4812018913 Harness W4 171

Referenced Pages

4812016658 Remote control, l.h. 183

Referenced Pages

4812018962 Harness W5 172

Referenced Pages

4812016659 Remote control, r.h. 185

Referenced Pages

4812016618 Remote control 182

Referenced Pages

4812018970 Extension cable W1, con. 188

4812062325 Cut off shoe, cpl. 4812062325 Cut off shoe, cpl.

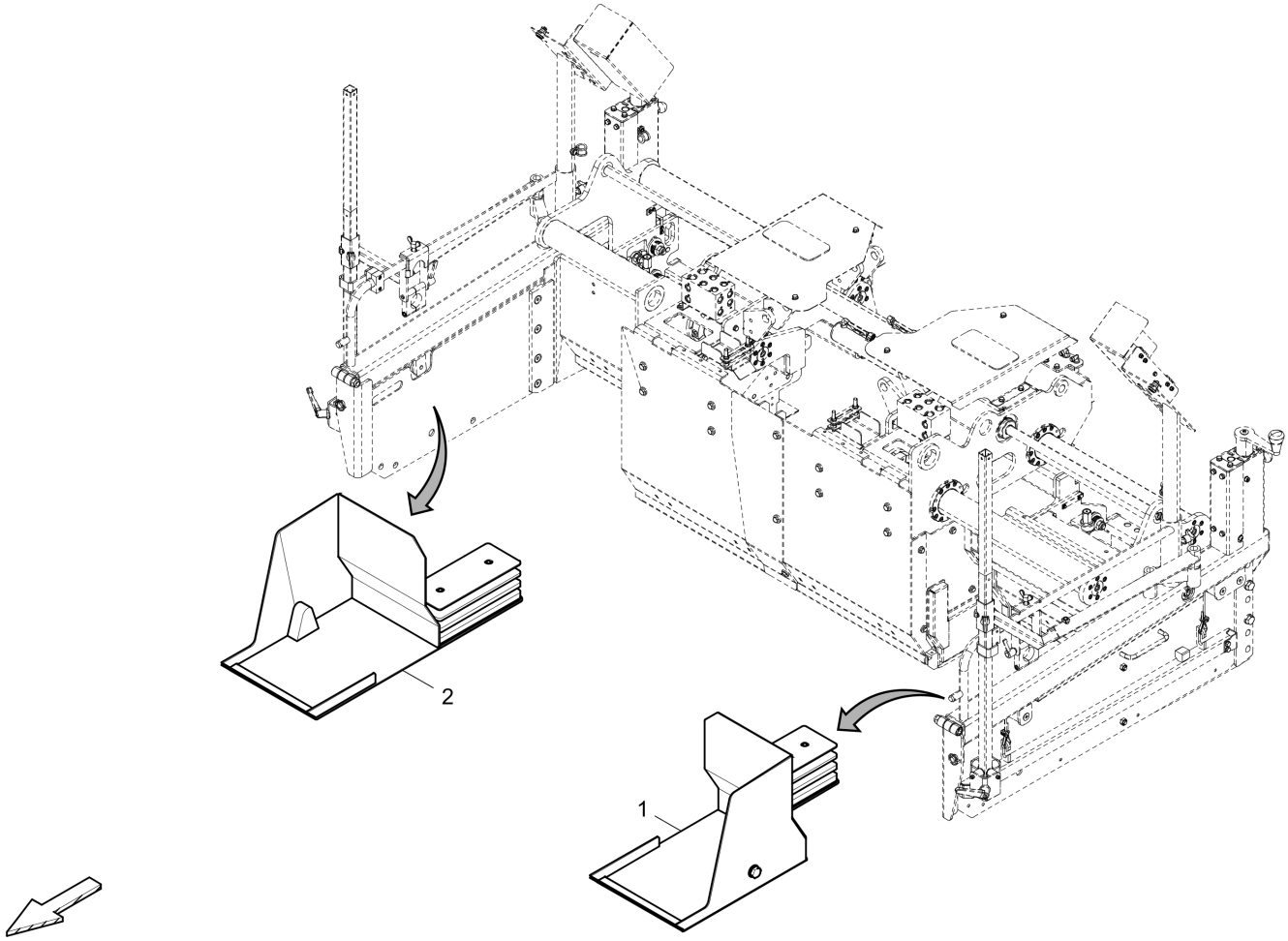

Item	Part No.	Name	Qty	L	C	SN INFO
1	4812062323	Cut off shoe, l.h.	1			
2	4812062324	Cut off shoe, r.h.	1			

Cut off shoe, l.h. 4812062323 Cut off shoe, l.h.

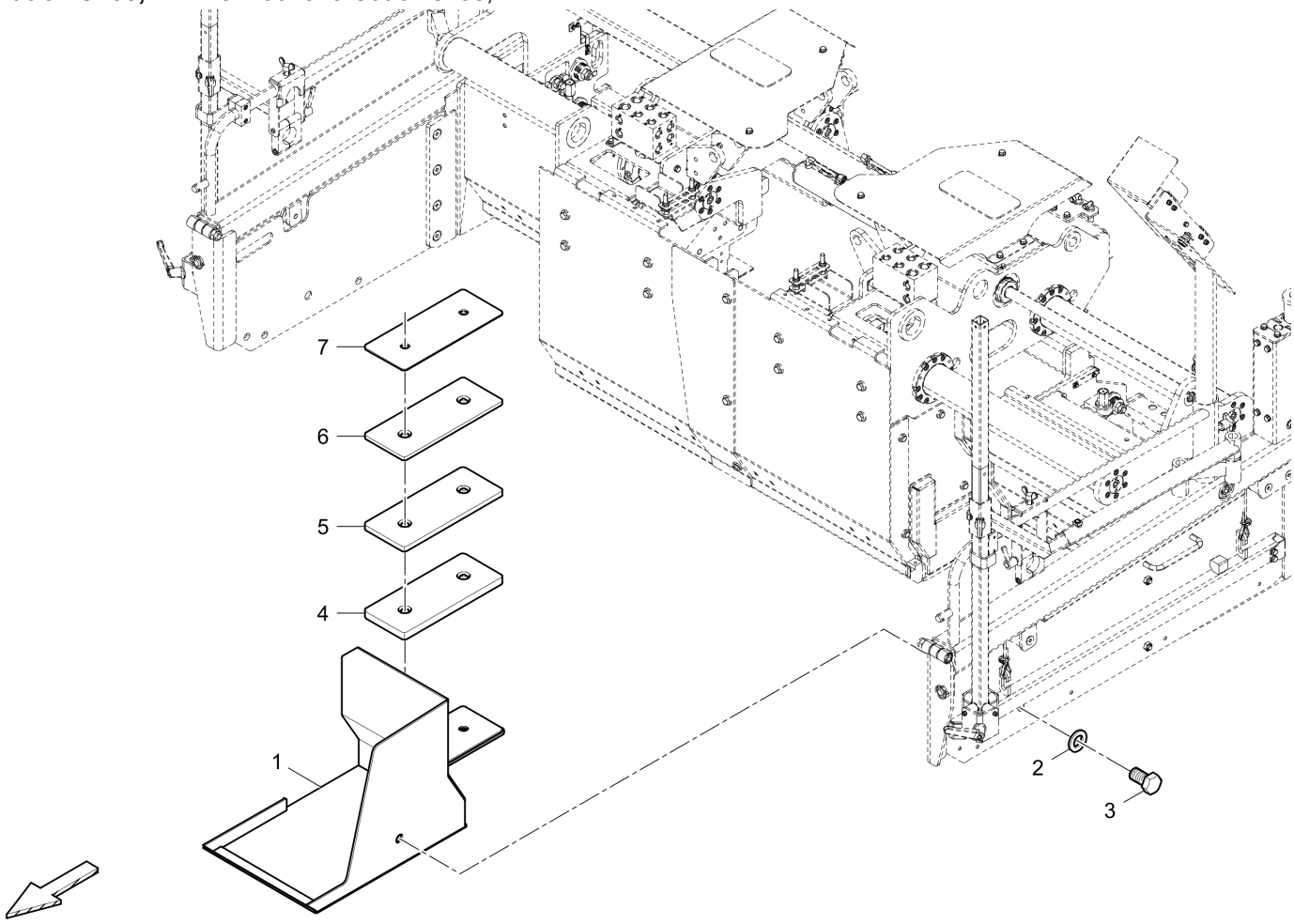

Item	Part No.	Name	Qty	L	C	SN INFO
1	4812062321	Cut off shoe	1			
2	0333310053	Washer	1			
3	0147154803	Hexagon head screw	1			
4	4812238999	Shoe 20mm	1			
5	4812239002	Shoe 15mm	1			
6	4812239005	Shoe 10mm	1			
7	4812239007	Shoe 5mm	1			

Cut off shoe, r.h. 4812062324 Cut off shoe, r.h.

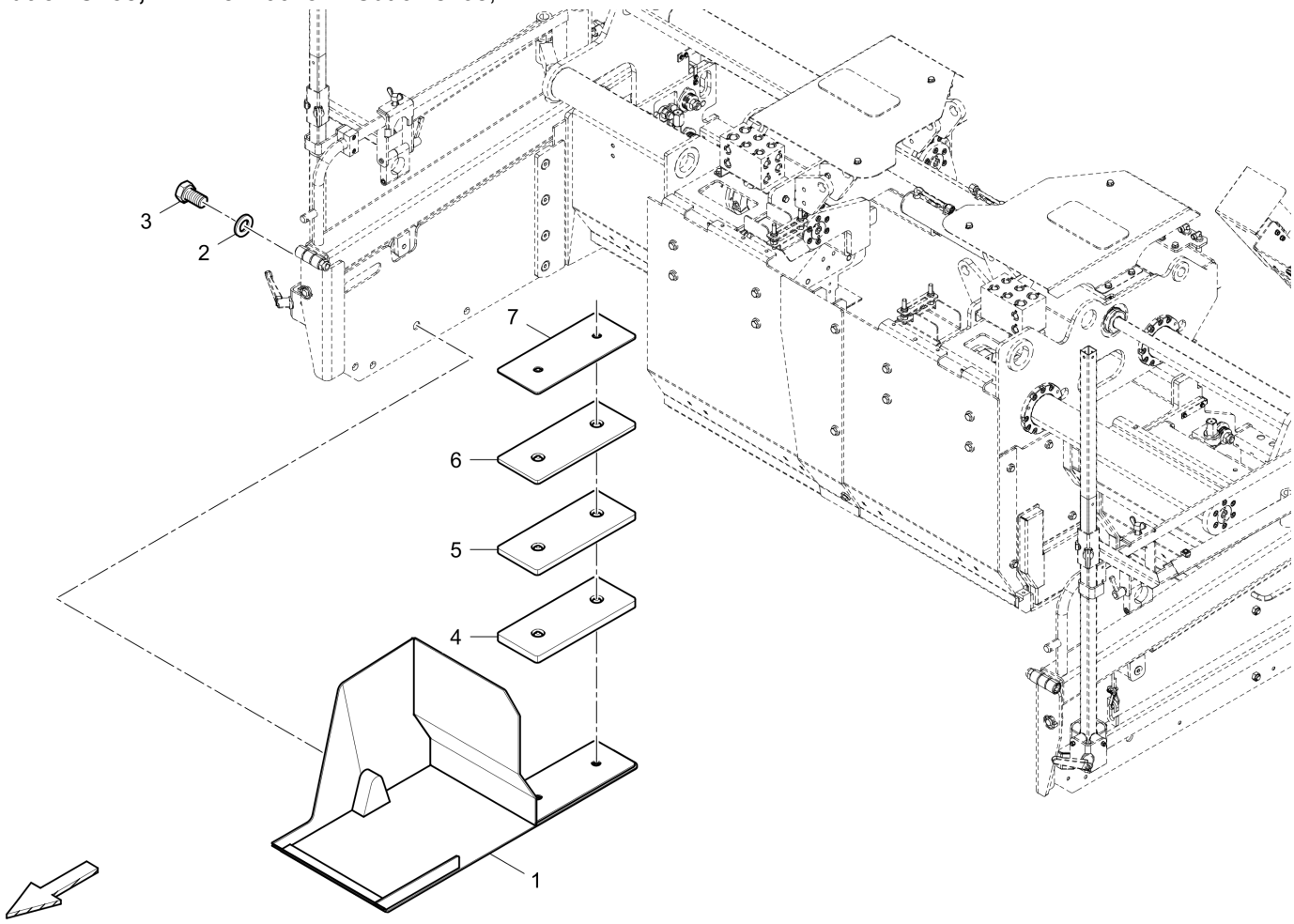

Item	Part No.	Name	Qty	L	C	SN INFO
1	4812062322	Cut off shoe	1			
2	0333310053	Washer	1			
3	0147154803	Hexagon head screw	1			
4	4812238999	Shoe 20mm	1			
5	4812239002	Shoe 15mm	1			
6	4812239005	Shoe 10mm	1			
7	4812239007	Shoe 5mm	1			

End plate unheated, l.h. & r.h. 4812061590 End plate unheated, l.h. & r.h.

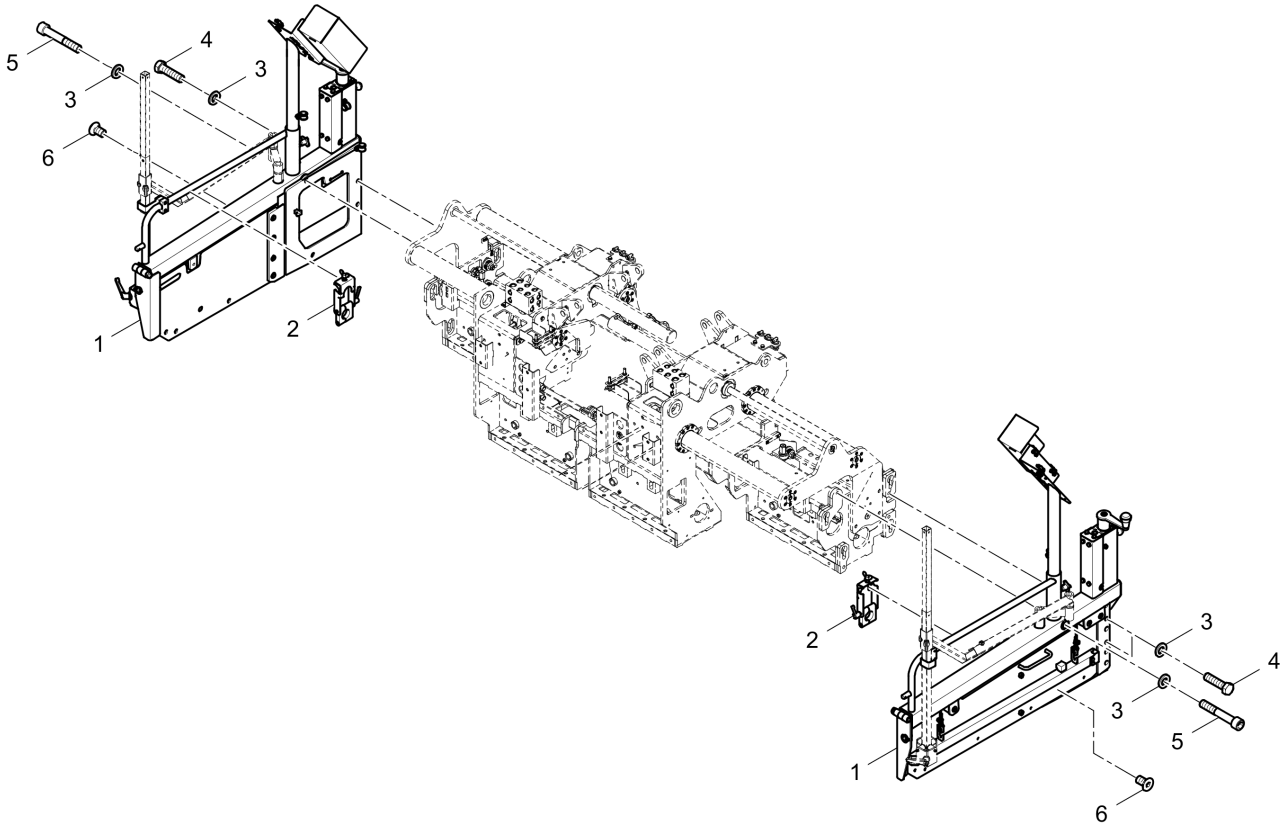

Item	Part No.	Name	Qty	L	C	SN INFO
1	4812061589	End plate, cpl	1			
1	4812064152	End plate, cpl	1			Valid for s/n 3103356, 3103717, 3103718, ff
2	4812228334	Retainer	2			
3	0333310049	Lock washer	6			
4	0147196180	Screw hexagon	4			
5	0211196204	Hexagon socket head cap screw	2			
6	0216110048	Countersunk screw	2			

End plate, cpl 4812061589 End plate, cpl

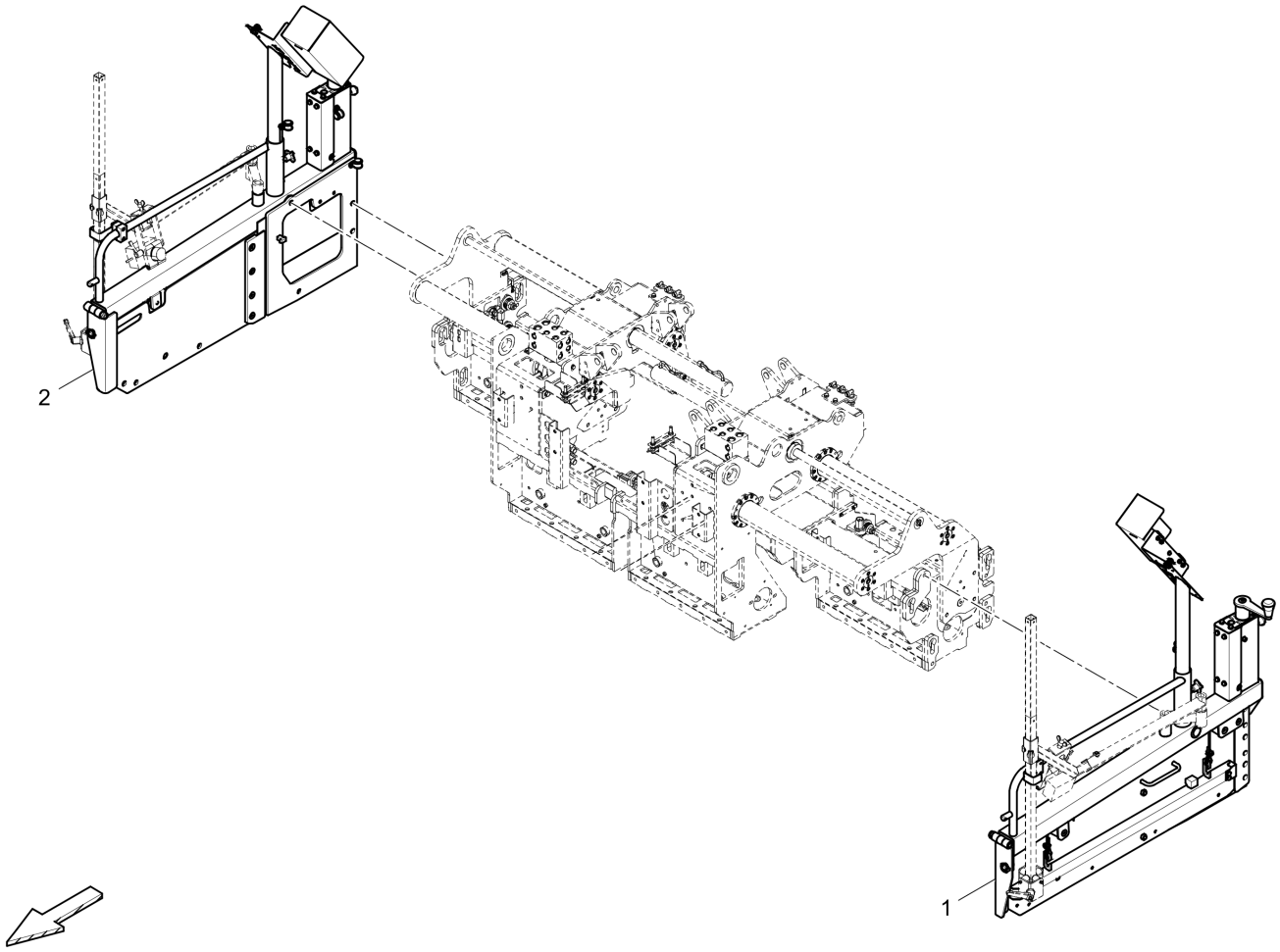

Item	Part No.	Name	Qty	L	C	SN INFO
1	4812061574	End plate, l.h.	1			
2	4812061588	End plate, r.h.	1			

End plate, l.h. 4812061574 End plate, l.h.

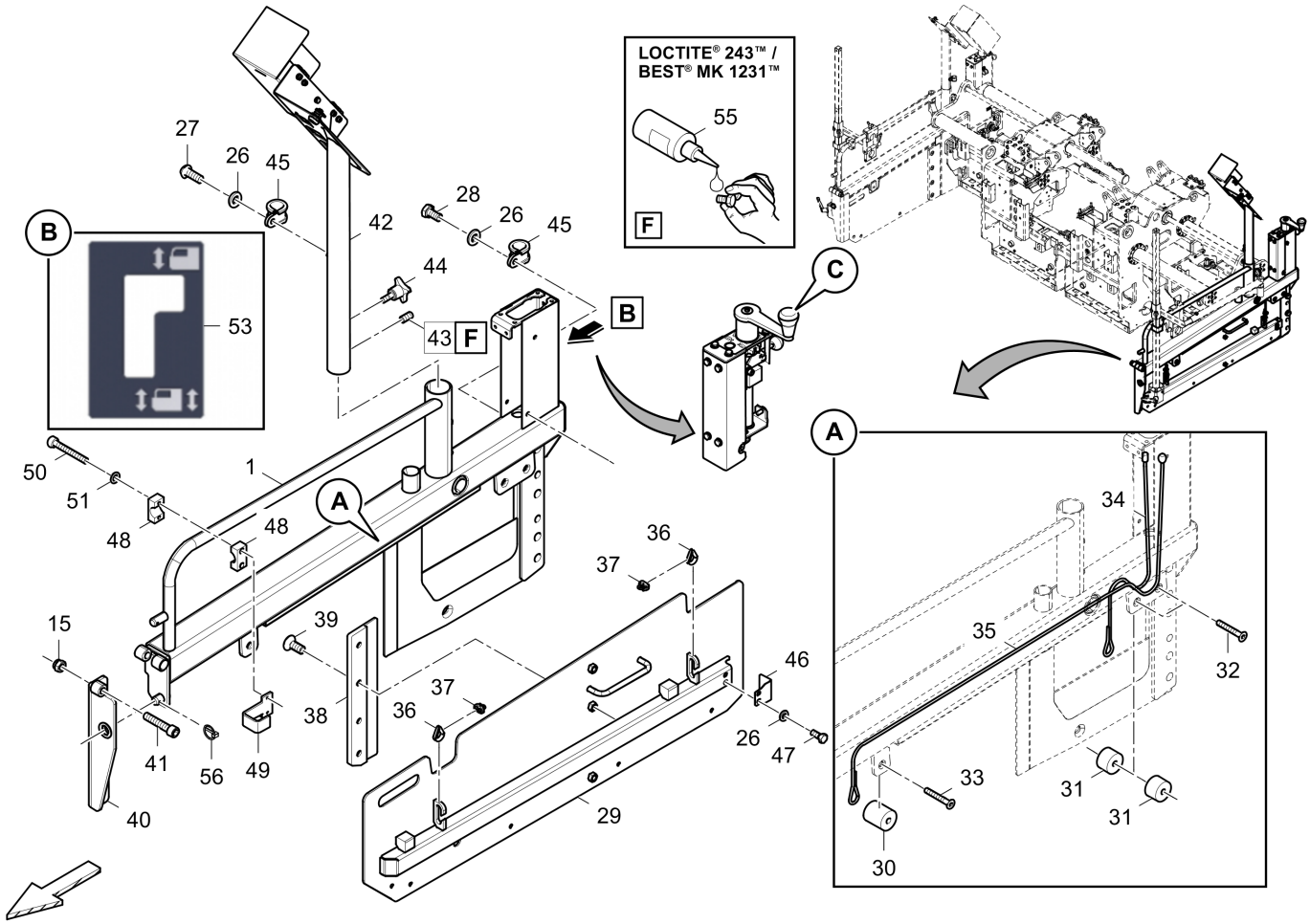

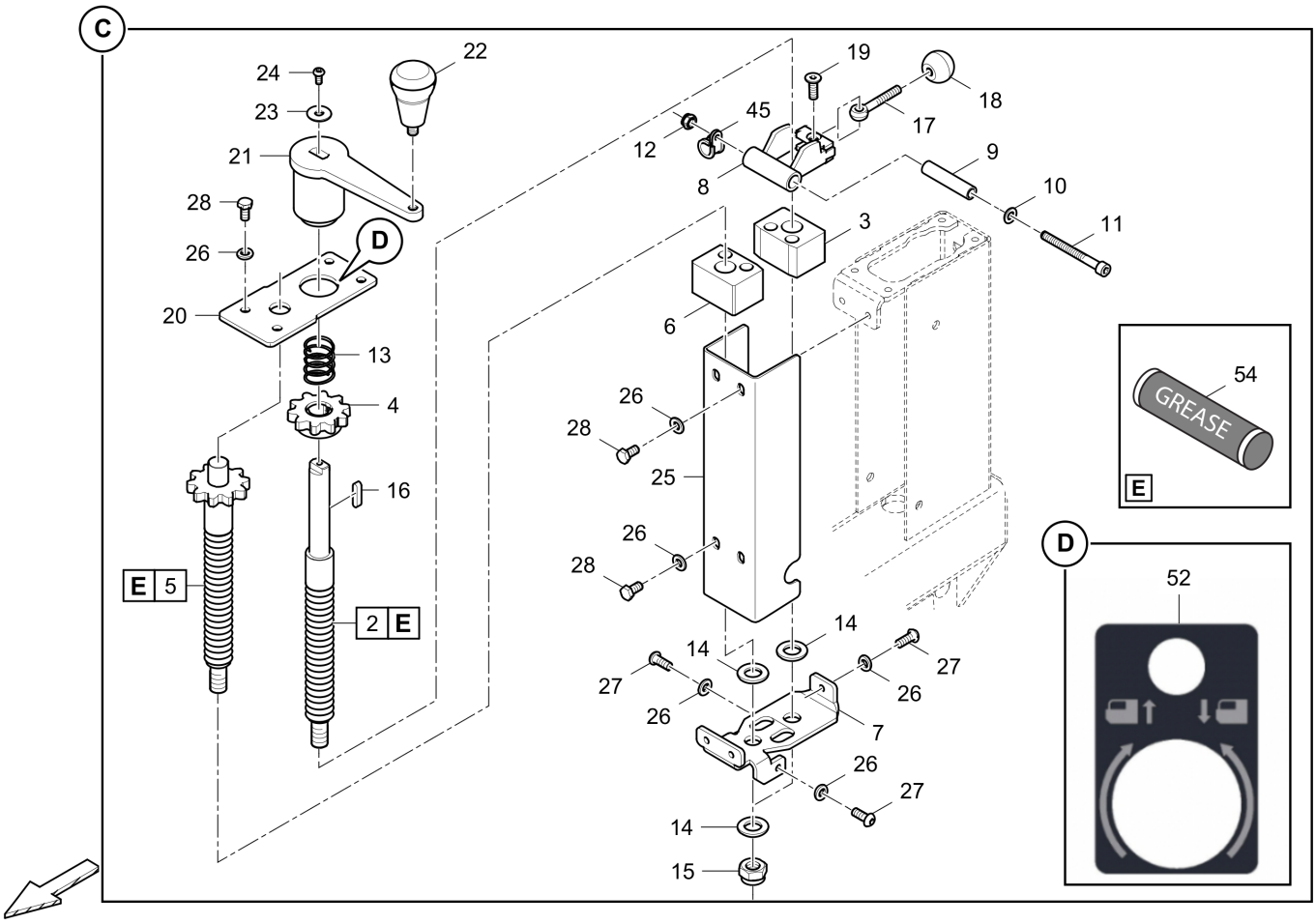

Item	Part No.	Name	Qty	L	C	SN INFO
1	4812061534	Holder f. end plate left	1			
2	4812061566	Spindle	1			
3	4812231154	Spindle nut	1			
4	4812071161	Gear	1			
5	4812061567	Spindle	1			
6	4812231155	Spindle nut	1			
7	4812061569	Support plate	1			
8	4812061556	Shift fork	1			
9	4812061547	Pipe	1			
10	0301233500	Plain washer	1			
11	0147133703	Hexagon head screw	1			
12	0291118554	Hexagon nut	1			
13	D930177009	Pressure spring	1			
14	0301237800	Plain washer	4			
15	5730007656	Hexagon nut	3			
16	0337212100	Feather key	1			
17	5730008547	Eyebolt	1			

Item	Part No.	Name	Qty	L	C	SN INFO
18	4749900811	Ball knob	1			
19	0216195761	Screw hexagon	1			
20	4812237016	Cover	1			
21	4812216448	Crank handle	1			
22	4749302381	Handle	1			
23	0300013040	Flat washer	1			
24	0215000621	Flat headed screw	1			
25	4812061543	Cover	1			
26	0333310050	Lock washer	15			
27	0215001064	Hex. Head screw M8 x 25	4			
28	0147132203	Hexagon head screw	9			
29	4812063735	Side cover, l.h.	1			
30	4812224938	Roller	1			
31	4812236983	Roller	4			
32	0216110060	Countersunk screw	2			
33	0216141103	Countersunk screw	1			
34	4812236978	Cable	1			
35	4812236979	Cable	1			
36	4812071400	Rope thimble	2			
37	D930421804	Rope clamp	2			
38	4812236972	Guide	1			
39	0216195762	Countersunk screw	4			
40	4812061571	Holding device, l.h.	1			
41	0211110424	Hexagon socket head cap screw	1			
42	4812061554	Holder for remote control, l.h.	1			
43	4749900101	Threaded pin	1			
44	4812073113	Cross grip screw	1			
45	D934362096	Pipe clamp	3			
46	4812236984	Cover	1			
47	0147132303	Hexagon bolt	2			
48	4749300003	Clamp, 2 halves	1			
49	4812061545	Holding plate	1			
50	0211125303	Hex sock. screw	2			
51	0301232100	Plain washer	2			
52	4812061542	Adhesive foil	1			
53	4812061539	Adhesive foil	1			
54	4812161897	Paver Grease - 1 cartridge	1			
55	D930290215	Sealant	1			

Item	Part No.	Name	Qty	L	C	SN INFO
56	D930290084	Safety pin	1			

Holder for remote control, l.h. 4812061554 Holder for remote control, l.h.

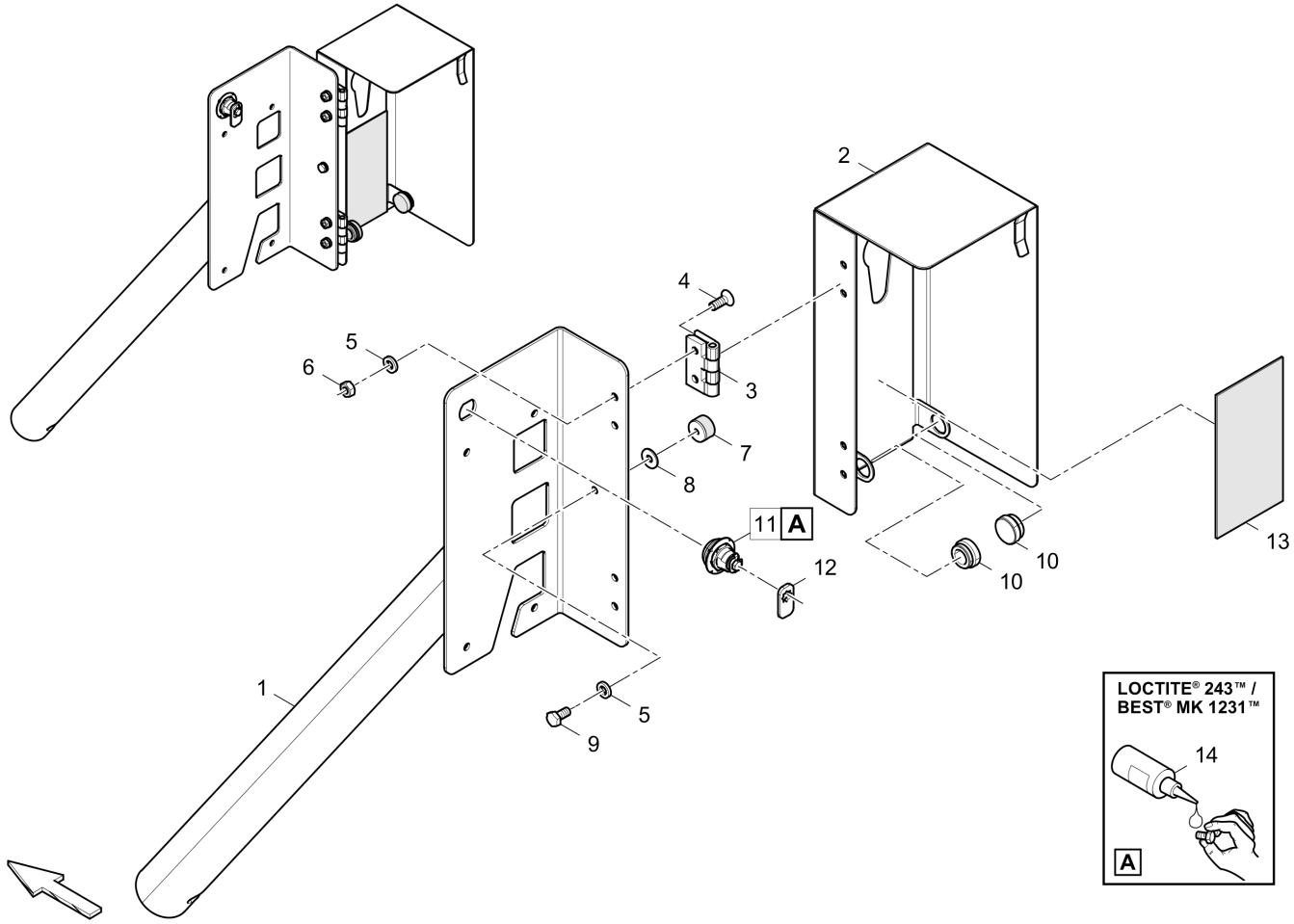

Item	Part No.	Name	Qty	L	C	SN INFO
1	4812061559	Guide plate, l.h.	1			
2	4812061561	Cover, l.h.	1			
3	4749302191	Hinge	2			
4	0216195726	Hex sock. screw	8			
5	0333310055	Washer	9			
6	5730015118	Hexagon nut	8			
7	4812029437	Rubber buffer	1			
8	0300013041	Flat washer	1			
9	0147124403	Screw	1			
10	4749302522	Grommet	2			
11	4812017040	Sash lock	1			
12	4812236997	Latch	1			
13	4812061555	Rubber plate	1			
14	D930290215	Sealant	1			

End plate, r.h. 4812061588 End plate, r.h.

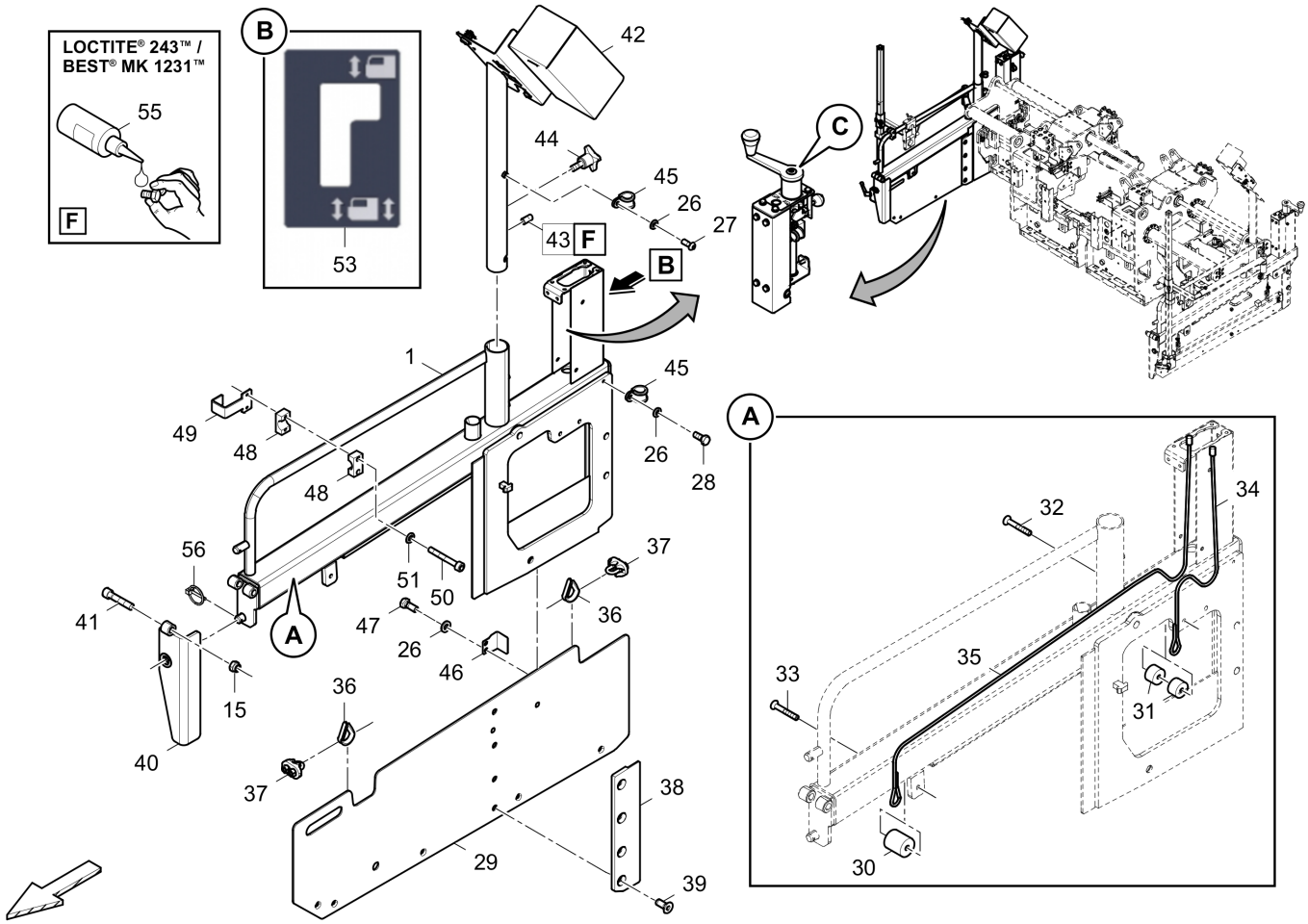

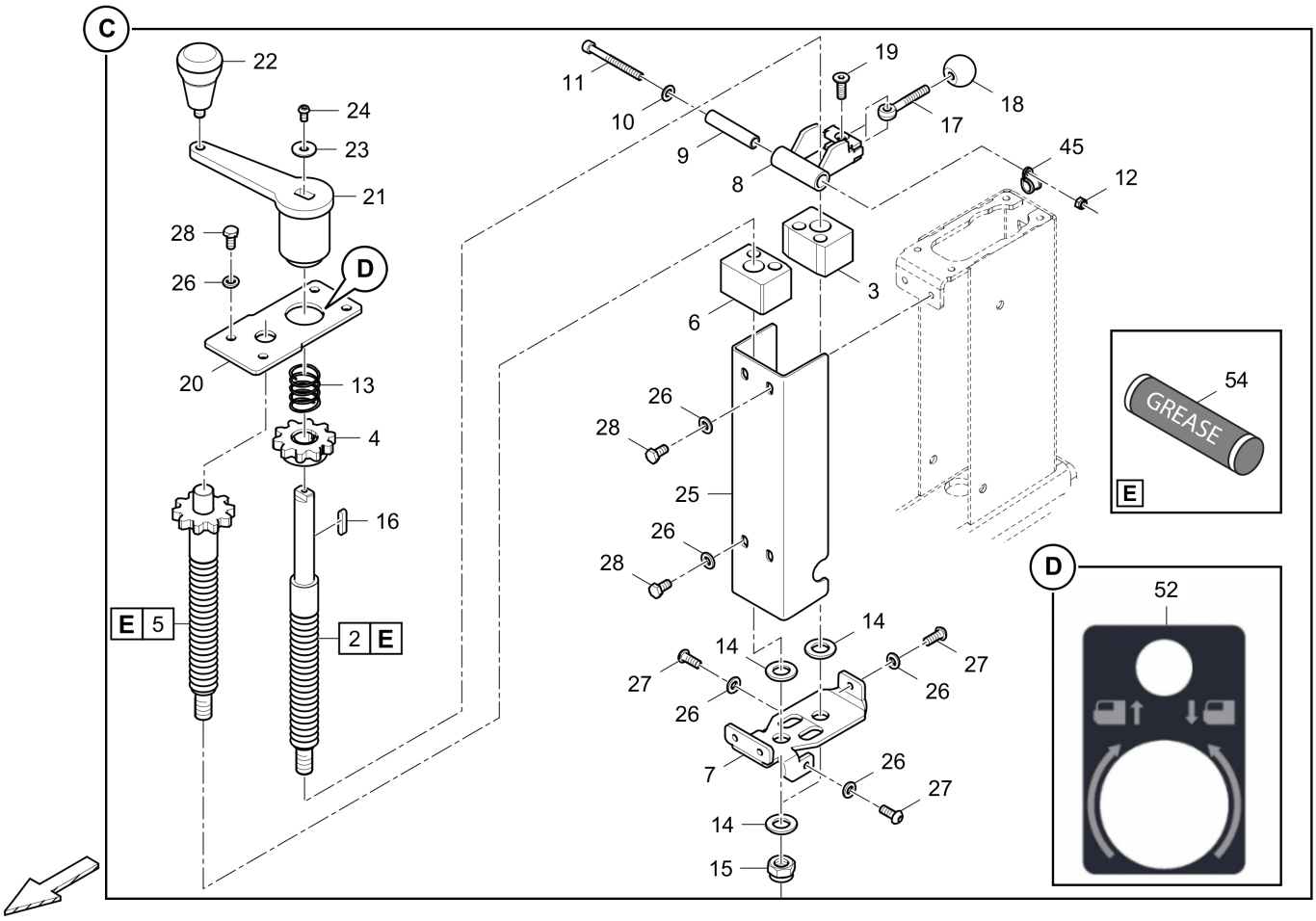

Item	Part No.	Name	Qty	L	C	SN INFO
1	4812061535	Holder f. end plate right	1			
2	4812061566	Spindle	1			
3	4812231154	Spindle nut	1			
4	4812071161	Gear	1			
5	4812061567	Spindle	1			
6	4812231155	Spindle nut	1			
7	4812061569	Support plate	1			
8	4812061556	Shift fork	1			
9	4812061547	Pipe	1			
10	0301233500	Plain washer	1			
11	0147133703	Hexagon head screw	1			
12	0291118554	Hexagon nut	1			
13	D930177009	Pressure spring	1			
14	0301237800	Plain washer	4			
15	5730007656	Hexagon nut	3			
16	0337212100	Feather key	1			
17	5730008547	Eyebolt	1			

Item	Part No.	Name	Qty	L	C	SN INFO
18	4749900811	Ball knob	1			
19	0216195761	Screw hexagon	1			
20	4812237016	Cover	1			
21	4812216448	Crank handle	1			
22	4749302381	Handle	1			
23	0300013040	Flat washer	1			
24	0215000621	Flat headed screw	1			
25	4812061543	Cover	1			
26	0333310050	Lock washer	15			
27	0215001064	Hex. Head screw M8 x 25	4			
28	0147132203	Hexagon head screw	9			
29	4812063745	Side cover, r.h.	1			
30	4812224938	Roller	1			
31	4812236983	Roller	4			
32	0216110060	Countersunk screw	2			
33	0216141103	Countersunk screw	1			
34	4812236978	Cable	1			
35	4812236979	Cable	1			
36	4812071400	Rope thimble	2			
37	D930421804	Rope clamp	2			
38	4812237083	Guide	1			
39	0216195762	Countersunk screw	4			
40	4812061578	Holding device,r.h.	1			
41	0211110424	Hexagon socket head cap screw	1			
42	4812061580	Holder for remote control, r.h.	1			
43	4749900101	Threaded pin	1			
44	4812073113	Cross grip screw	1			
45	D934362096	Pipe clamp	3			
46	4812236984	Cover	1			
47	0147132303	Hexagon bolt	2			
48	4749300003	Clamp, 2 halves	1			
49	4812061545	Holding plate	1			
50	0211125303	Hex sock. screw	2			
51	0301232100	Plain washer	2			
52	4812061542	Adhesive foil	1			
53	4812061539	Adhesive foil	1			
54	4812161897	Paver Grease - 1 cartridge	1			
55	D930290215	Sealant	1			

Item	Part No.	Name	Qty	L	C	SN INFO
56	D930290084	Safety pin	1			

Holder for remote control, r.h. 4812061580 Holder for remote control, r.h.

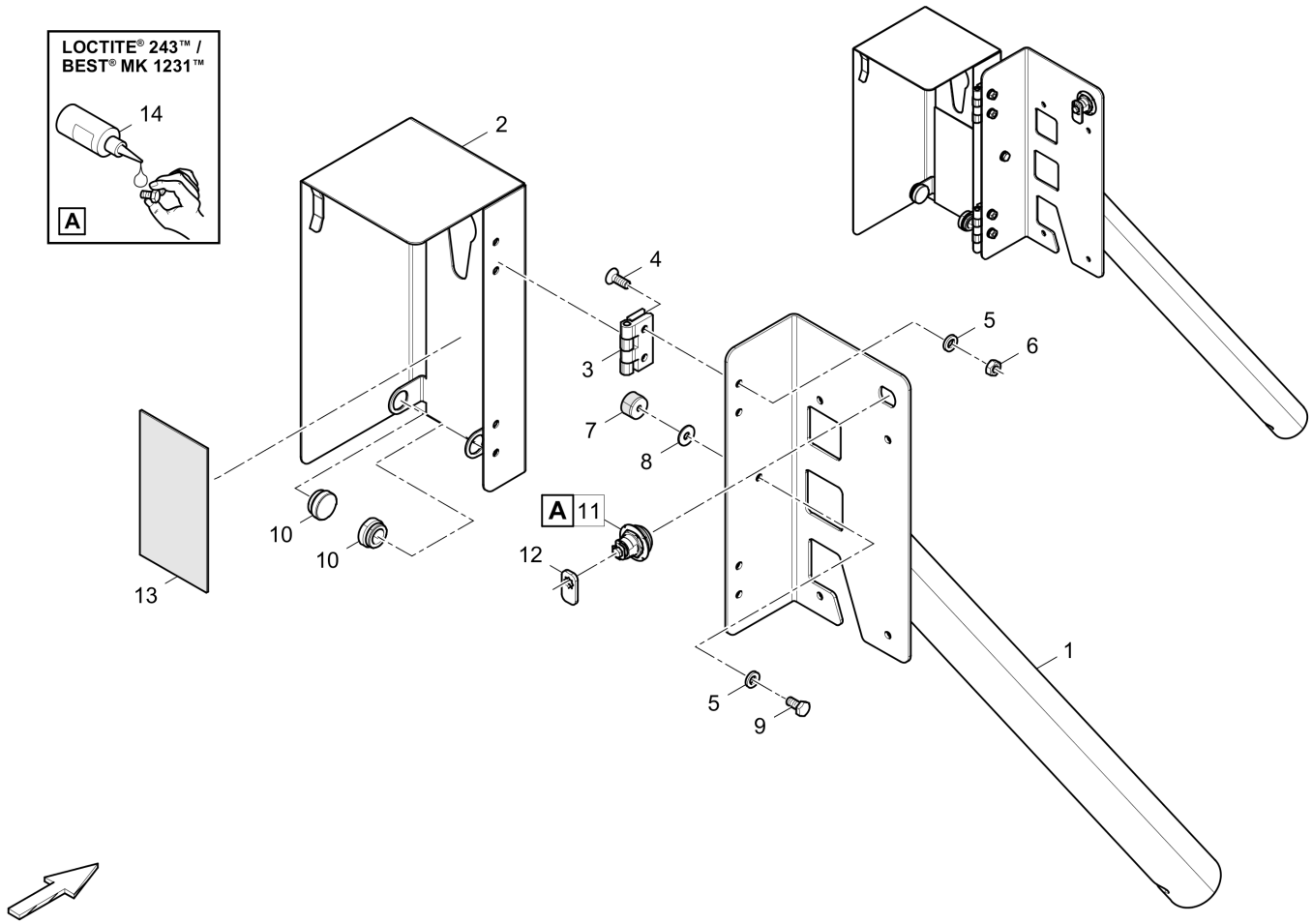

Item	Part No.	Name	Qty	L	C	SN INFO
1	4812061581	Guide plate, r.h.	1			
2	4812061583	Cover, r.h.	1			
3	4749302191	Hinge	2			
4	0216195726	Hex sock. screw	8			
5	0333310055	Washer	9			
6	5730015118	Hexagon nut	8			
7	4812029437	Rubber buffer	1			
8	0300013041	Flat washer	1			
9	0147124403	Screw	1			
10	4749302522	Grommet	2			
11	4812017040	Sash lock	1			
12	4812236997	Latch	1			
13	4812061555	Rubber plate	1			
14	D930290215	Sealant	1			

End plate, cpl 4812064152 End plate, cpl

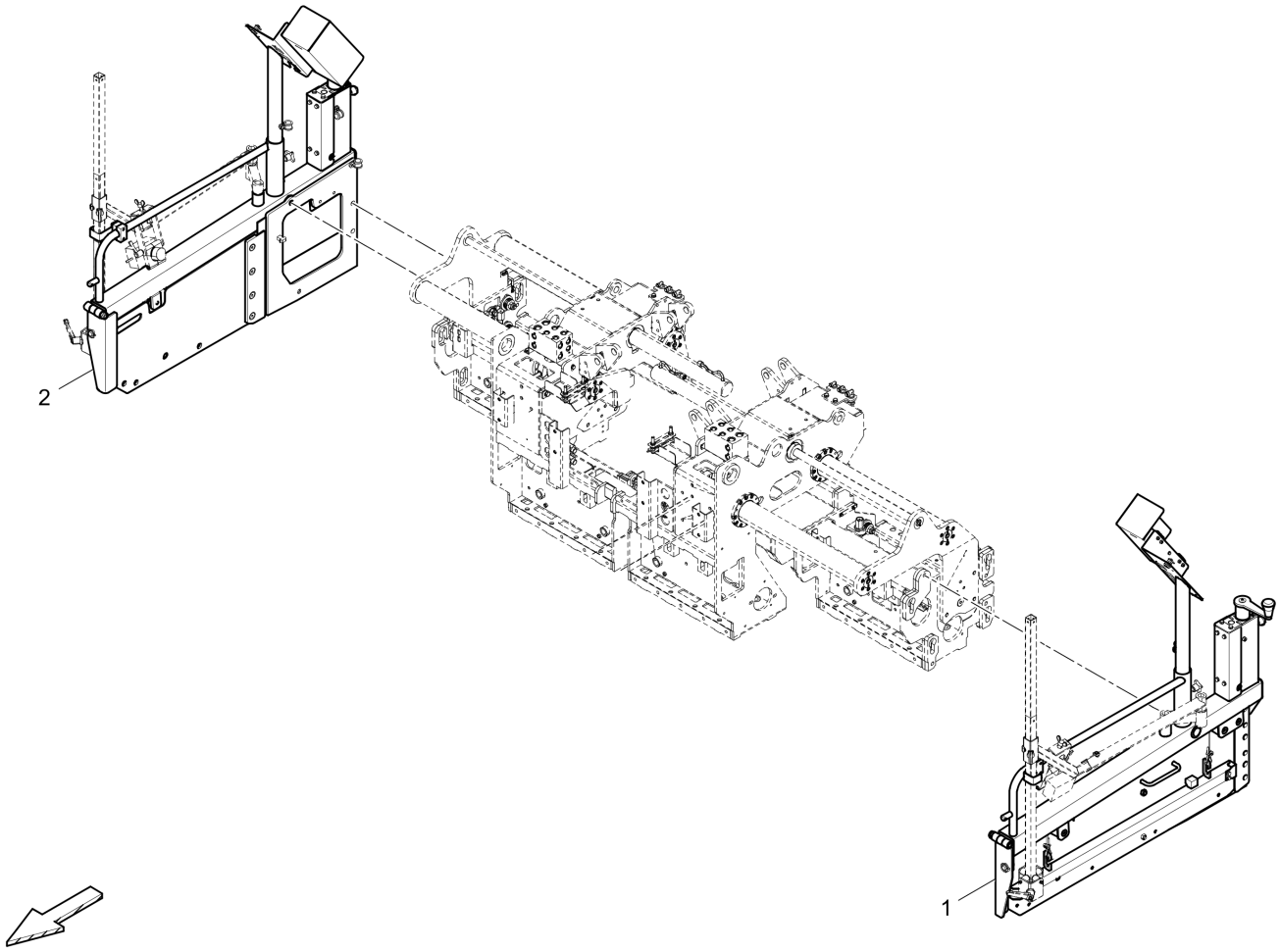

Item	Part No.	Name	Qty	L	C	SN INFO
1	4812064154	End plate, l.h.	1			
2	4812064153	End plate, r.h.	1			

End plate, l.h. 4812064154 End plate, l.h.

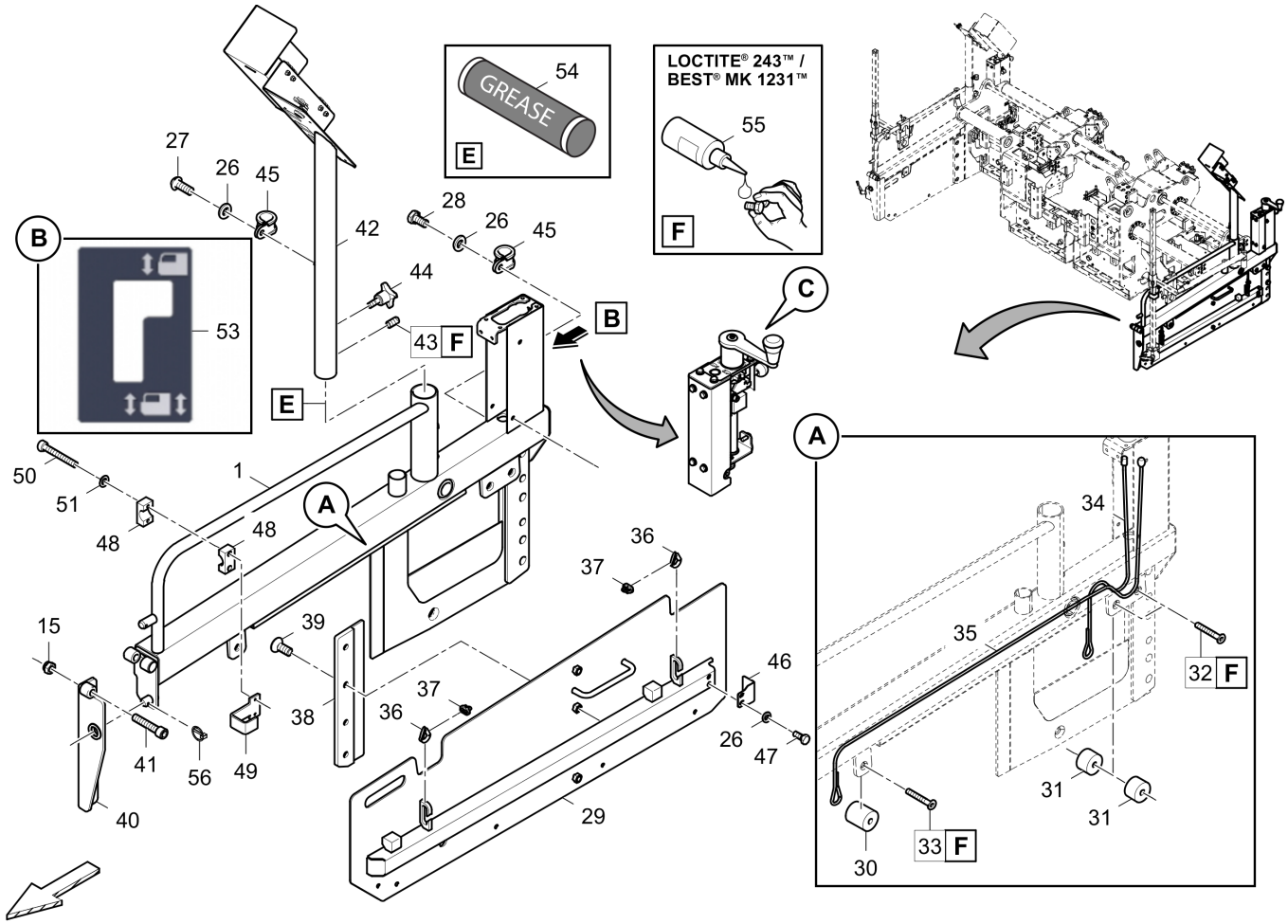

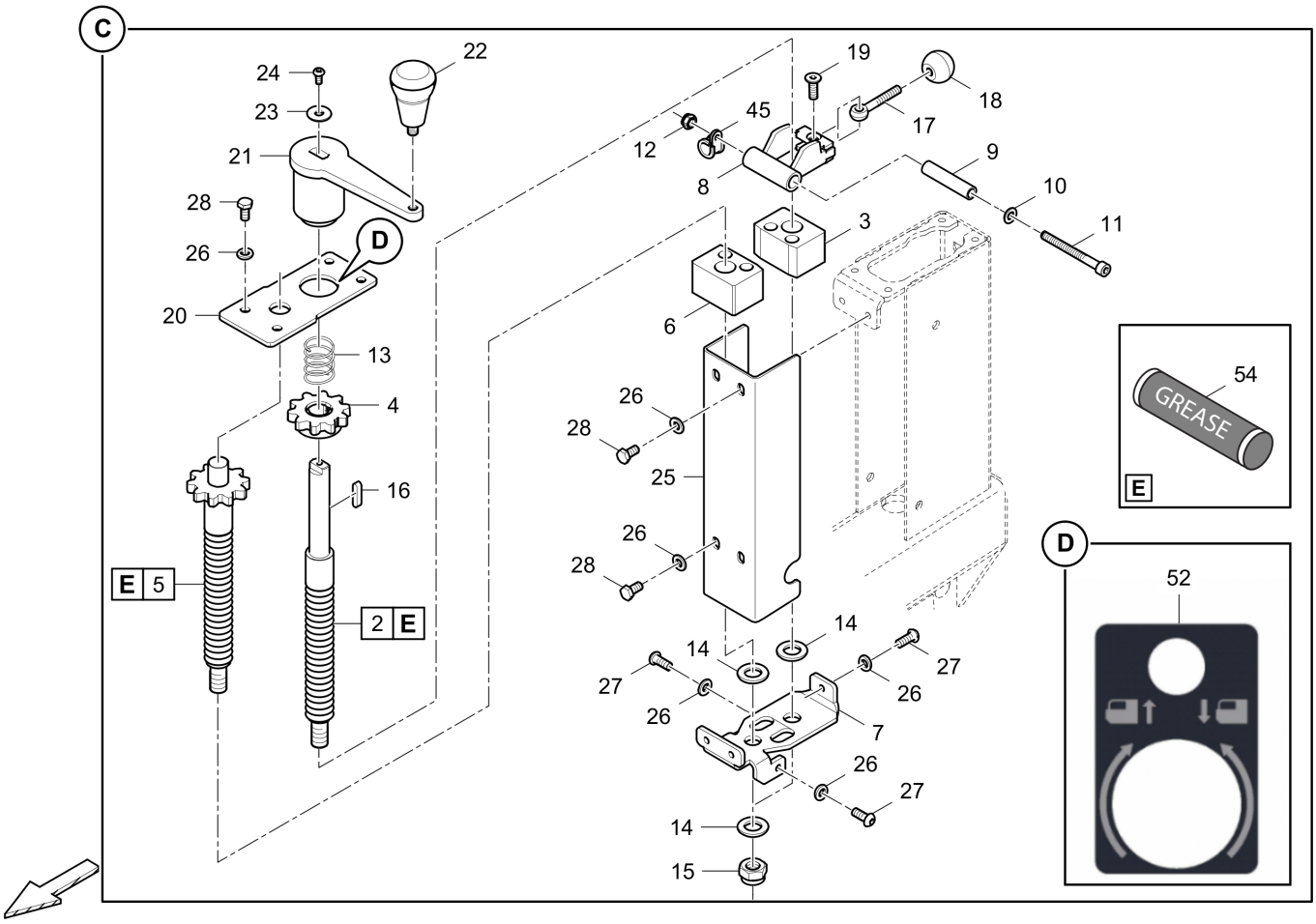

Item	Part No.	Name	Qty	L	C	SN INFO
1	4812061534	Holder f. end plate left	1			
2	4812061566	Spindle	1			
3	4812231154	Spindle nut	1			
4	4812071161	Gear	1			
5	4812061567	Spindle	1			
6	4812231155	Spindle nut	1			
7	4812061569	Support plate	1			
8	4812061556	Shift fork	1			
9	4812061547	Pipe	1			
10	0301233500	Plain washer	1			
11	0147133703	Hexagon head screw	1			
12	0291118554	Hexagon nut	1			
13	D930177009	Pressure spring	1			
14	0301237800	Plain washer	4			
15	5730007656	Hexagon nut	3			
16	0337212100	Feather key	1			
17	5730008547	Eyebolt	1			

Item	Part No.	Name	Qty	L	C	SN INFO
18	4749900811	Ball knob	1			
19	0216195761	Screw hexagon	1			
20	4812237016	Cover	1			
21	4812216448	Crank handle	1			
22	4749302381	Handle	1			
23	0300013040	Flat washer	1			
24	0215000621	Flat headed screw	1			
25	4812061543	Cover	1			
26	0333310050	Lock washer	15			
27	0215001064	Hex. Head screw M8 x 25	4			
28	0147132203	Hexagon head screw	9			
29	4812063735	Side cover, l.h.	1			
30	4812224938	Roller	1			
31	4812236983	Roller	4			
32	0216110060	Countersunk screw	2			
33	0216141103	Countersunk screw	1			
34	4812236978	Cable	1			
35	4812236979	Cable	1			
36	4812071400	Rope thimble	2			
37	D930421804	Rope clamp	2			
38	4812236972	Guide	1			
39	0216195762	Countersunk screw	4			
40	4812061571	Holding device, l.h.	1			
41	0211110424	Hexagon socket head cap screw	1			
42	4812064156	Holder for remote control, l.h.	1			For locking system # 603
43	4749900101	Threaded pin	1			
44	4812073113	Cross grip screw	1			
45	D934362096	Pipe clamp	3			
46	4812236984	Cover	1			
47	0147132303	Hexagon bolt	2			
48	4749300003	Clamp, 2 halves	1			
49	4812061545	Holding plate	1			
50	0211125303	Hex sock. screw	2			
51	0301232100	Plain washer	2			
52	4812061542	Adhesive foil	1			
53	4812061539	Adhesive foil	1			
54	4812161897	Paver Grease - 1 cartridge	1			
55	D930290215	Sealant	1			

Item	Part No.	Name	Qty	L	C	SN INFO
56	D930290084	Safety pin	1			

Holder for remote control, l.h. 4812064156 Holder for remote control, l.h.

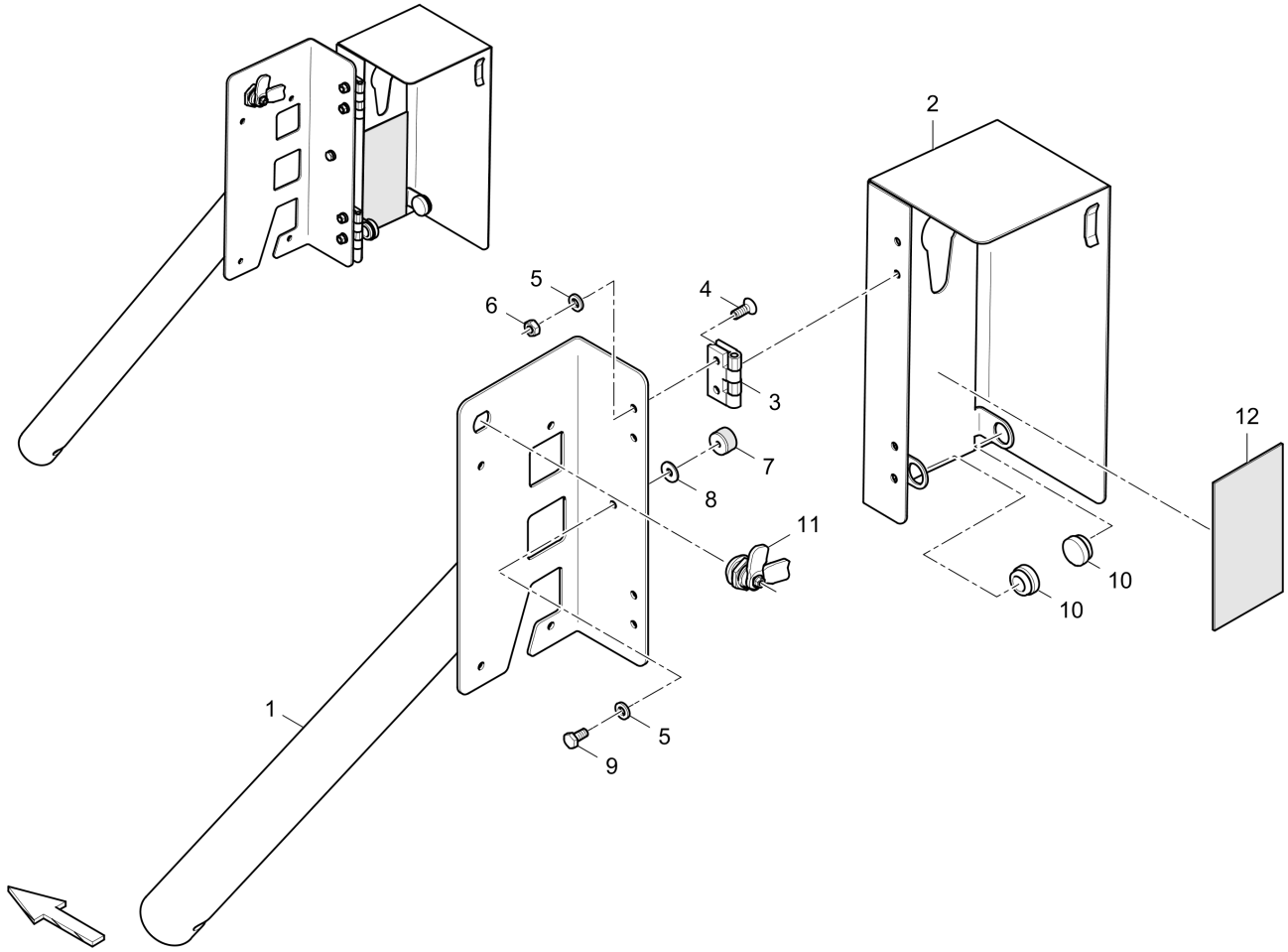

Item	Part No.	Name	Qty	L	C	SN INFO
1	4812064151	Guide plate, l.h.	1			
2	4812064162	Cover, l.h.	1			
3	4749302191	Hinge	2			
4	0216195726	Hex sock. screw	8			
5	0333310055	Washer	9			
6	5730015118	Hexagon nut	8			
7	4812029437	Rubber buffer	1			
8	0300013041	Flat washer	1			
9	0147124403	Screw	1			
10	4749302522	Grommet	2			
11	4812076263	Rotary latch lock	1			
12	4812061555	Rubber plate	1			

End plate, r.h. 4812064153 End plate, r.h.

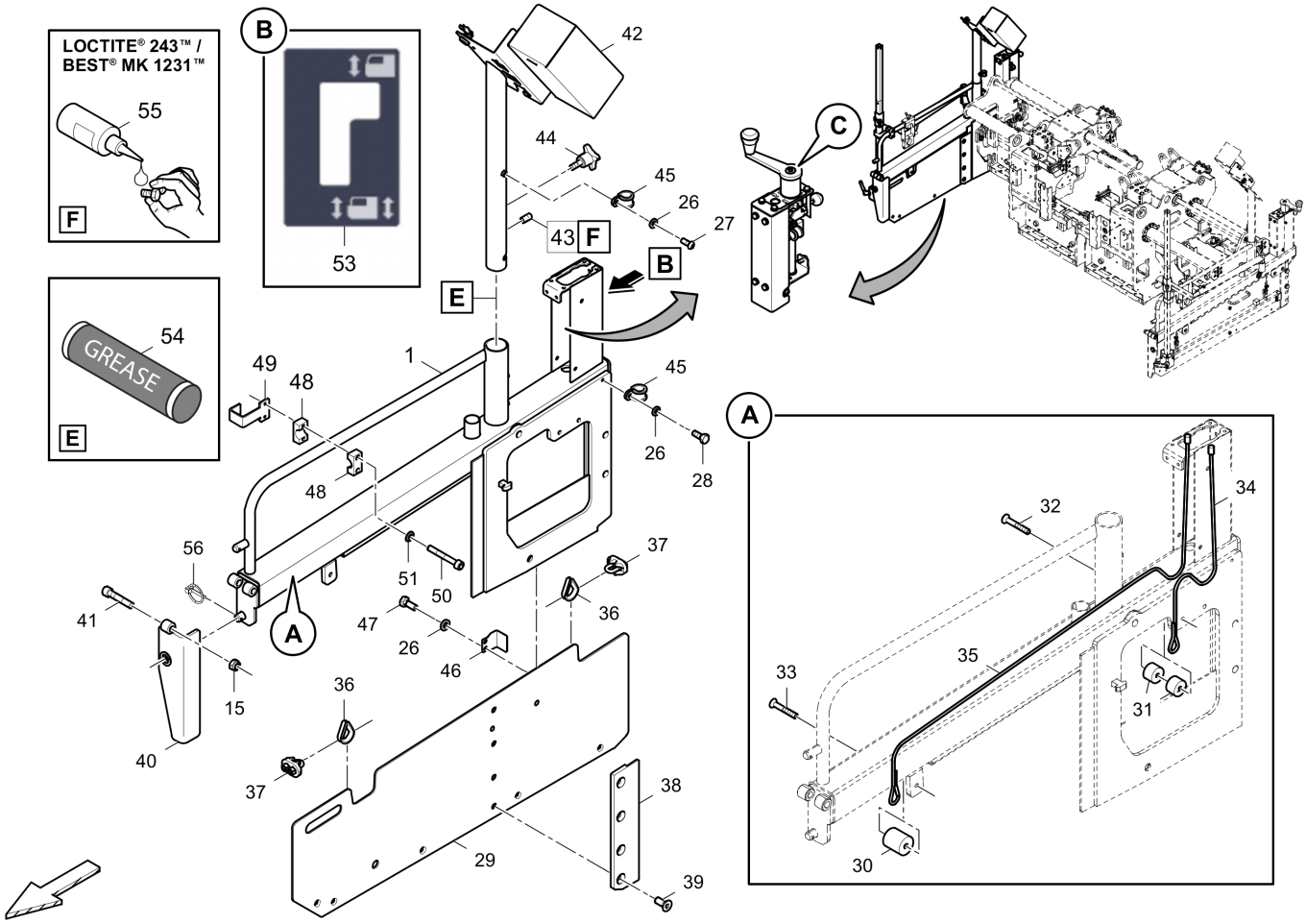

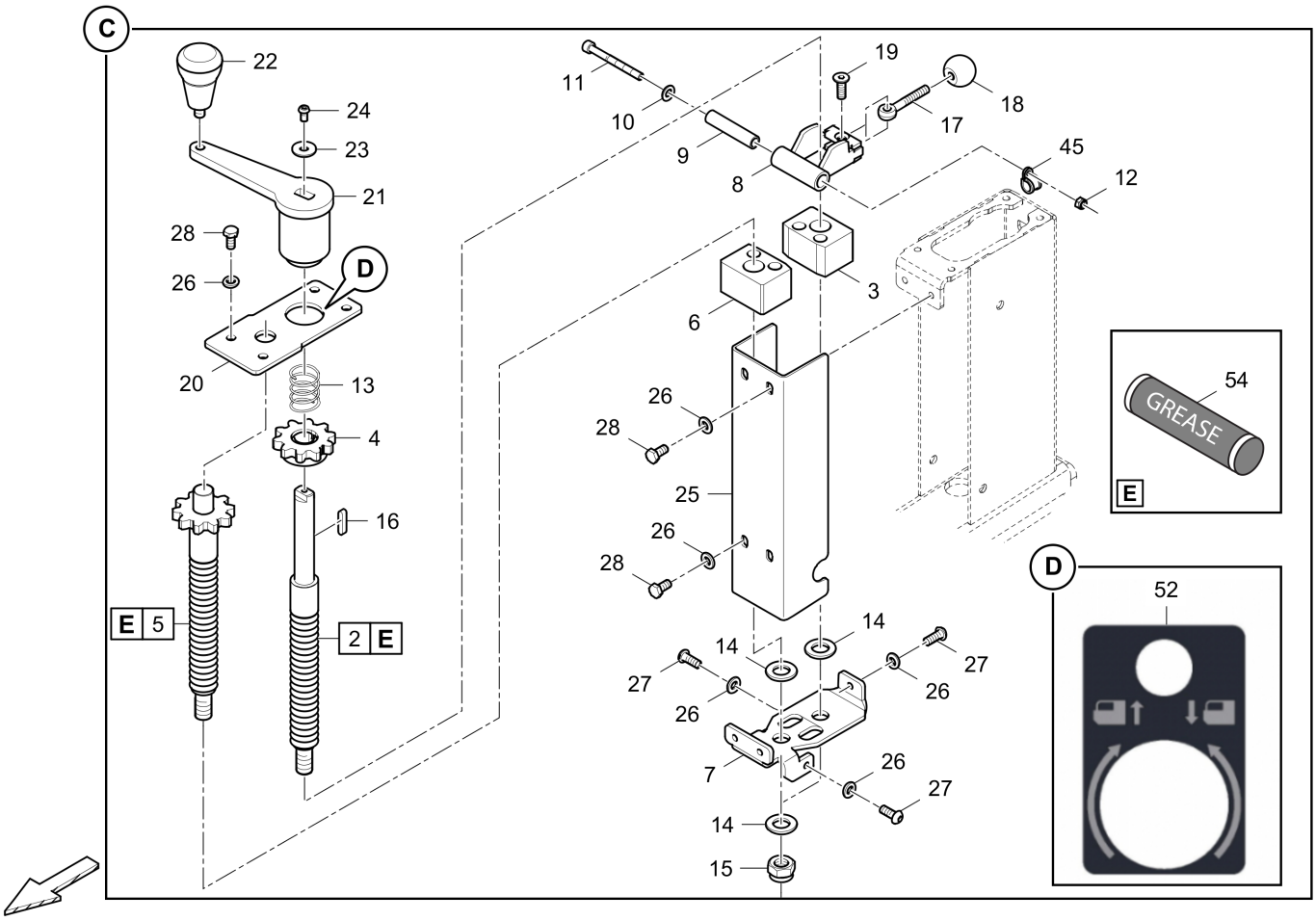

Item	Part No.	Name	Qty	L	C	SN INFO
1	4812061535	Holder f. end plate right	1			
2	4812061566	Spindle	1			
3	4812231154	Spindle nut	1			
4	4812071161	Gear	1			
5	4812061567	Spindle	1			
6	4812231155	Spindle nut	1			
7	4812061569	Support plate	1			
8	4812061556	Shift fork	1			
9	4812061547	Pipe	1			
10	0301233500	Plain washer	1			
11	0147133703	Hexagon head screw	1			
12	0291118554	Hexagon nut	1			
13	D930177009	Pressure spring	1			
14	0301237800	Plain washer	4			
15	5730007656	Hexagon nut	3			
16	0337212100	Feather key	1			
17	5730008547	Eyebolt	1			

Item	Part No.	Name	Qty	L	C	SN INFO
18	4749900811	Ball knob	1			
19	0216195761	Screw hexagon	1			
20	4812237016	Cover	1			
21	4812216448	Crank handle	1			
22	4749302381	Handle	1			
23	0300013040	Flat washer	1			
24	0215000621	Flat headed screw	1			
25	4812061543	Cover	1			
26	0333310050	Lock washer	15			
27	0215001064	Hex. Head screw M8 x 25	4			
28	0147132203	Hexagon head screw	9			
29	4812063745	Side cover, r.h.	1			
30	4812224938	Roller	1			
31	4812236983	Roller	4			
32	0216110060	Countersunk screw	2			
33	0216141103	Countersunk screw	1			
34	4812236978	Cable	1			
35	4812236979	Cable	1			
36	4812071400	Rope thimble	2			
37	D930421804	Rope clamp	2			
38	4812237083	Guide	1			
39	0216195762	Countersunk screw	4			
40	4812061578	Holding device,r.h.	1			
41	0211110424	Hexagon socket head cap screw	1			
42	4812064155	Holder for remote control, r.h.	1			For locking system # 603
43	4749900101	Threaded pin	1			
44	4812073113	Cross grip screw	1			
45	D934362096	Pipe clamp	3			
46	4812236984	Cover	1			
47	0147132303	Hexagon bolt	2			
48	4749300003	Clamp, 2 halves	1			
49	4812061545	Holding plate	1			
50	0211125303	Hex sock. screw	2			
51	0301232100	Plain washer	2			
52	4812061542	Adhesive foil	1			
53	4812061539	Adhesive foil	1			
54	4812161897	Paver Grease - 1 cartridge	1			
55	D930290215	Sealant	1			

Item	Part No.	Name	Qty	L	C	SN INFO
56	D930290084	Safety pin	1			

Holder for remote control, r.h. 4812064155 Holder for remote control, r.h.

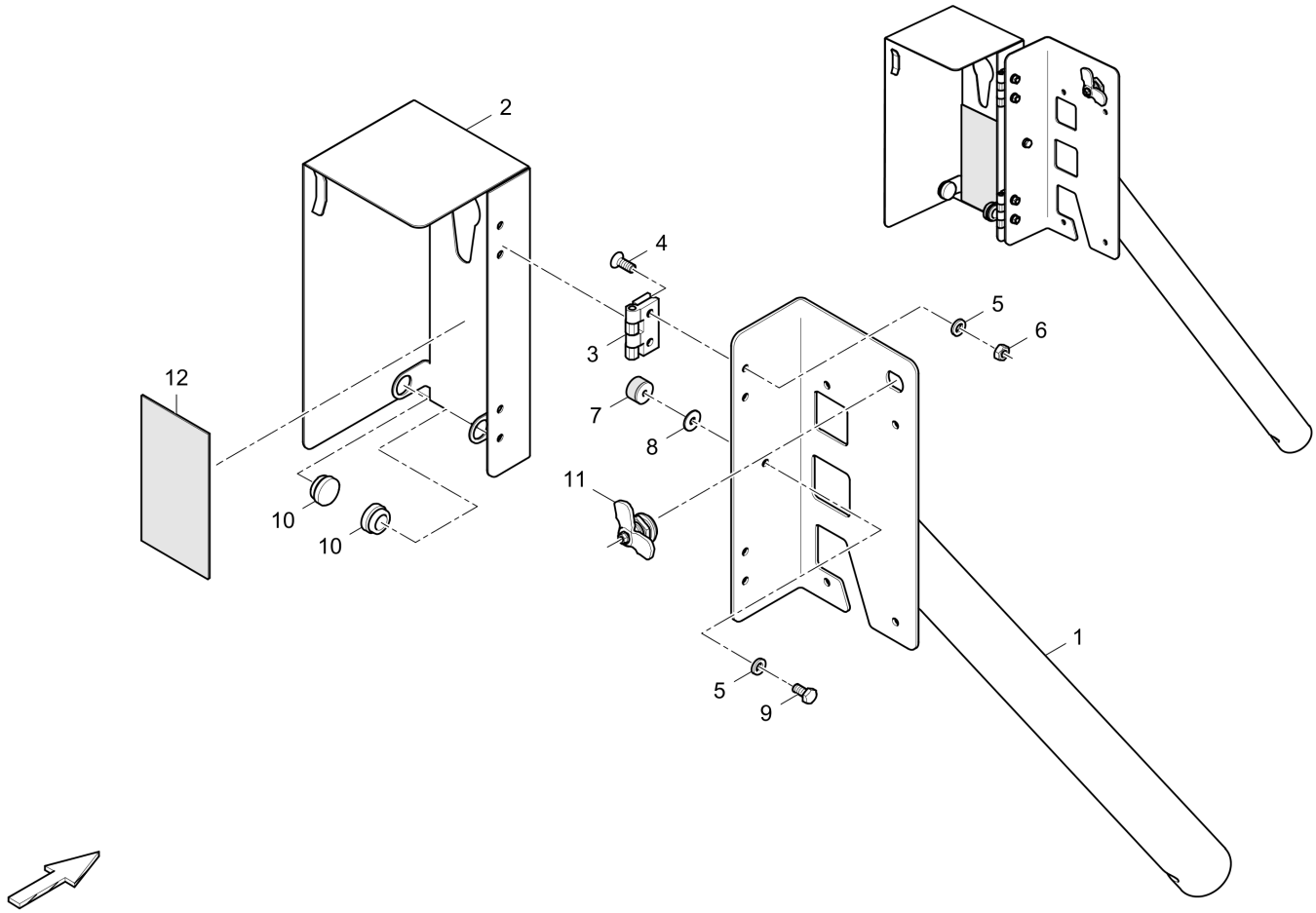

Item	Part No.	Name	Qty	L	C	SN INFO
1	4812064150	Guide plate, r.h.	1			
2	4812064163	Cover, r.h.	1			
3	4749302191	Hinge	2			
4	0216195726	Hex sock. screw	8			
5	0333310055	Washer	9			
6	5730015118	Hexagon nut	8			
7	4812029437	Rubber buffer	1			
8	0300013041	Flat washer	1			
9	0147124403	Screw	1			
10	4749302522	Grommet	2			
11	4812076263	Rotary latch lock	1			
12	4812061555	Rubber plate	1			

Retainer 4812228334 Retainer

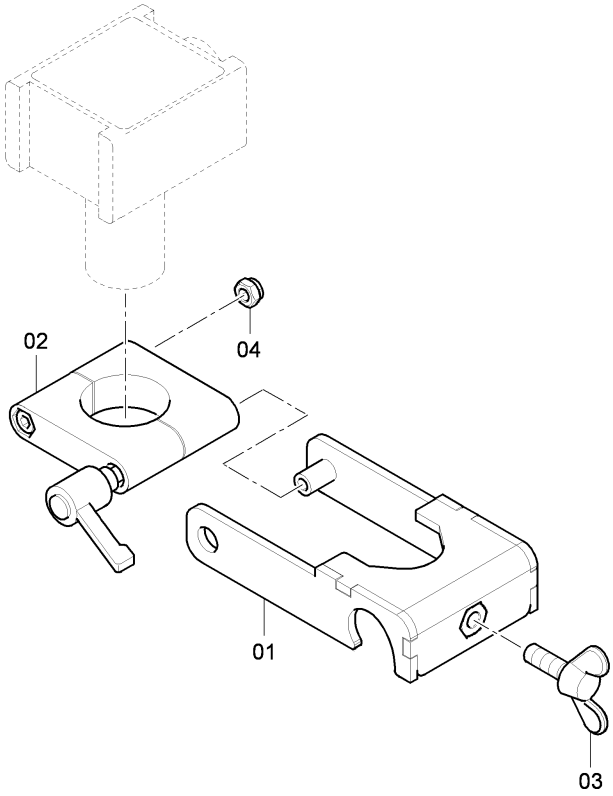

Item	Part No.	Name	Qty	L	C	SN INFO
1	4812228324	Holding device	1			
2	4730013408	Clamp	1			
3	0223195716	Butterfly screw	1			
4	0291118802	Hexagon nut	1			

El. end plate below heating, l.h. & r.h. - TV E 4812061630 El. end plate below heating, l.h. & r.h.

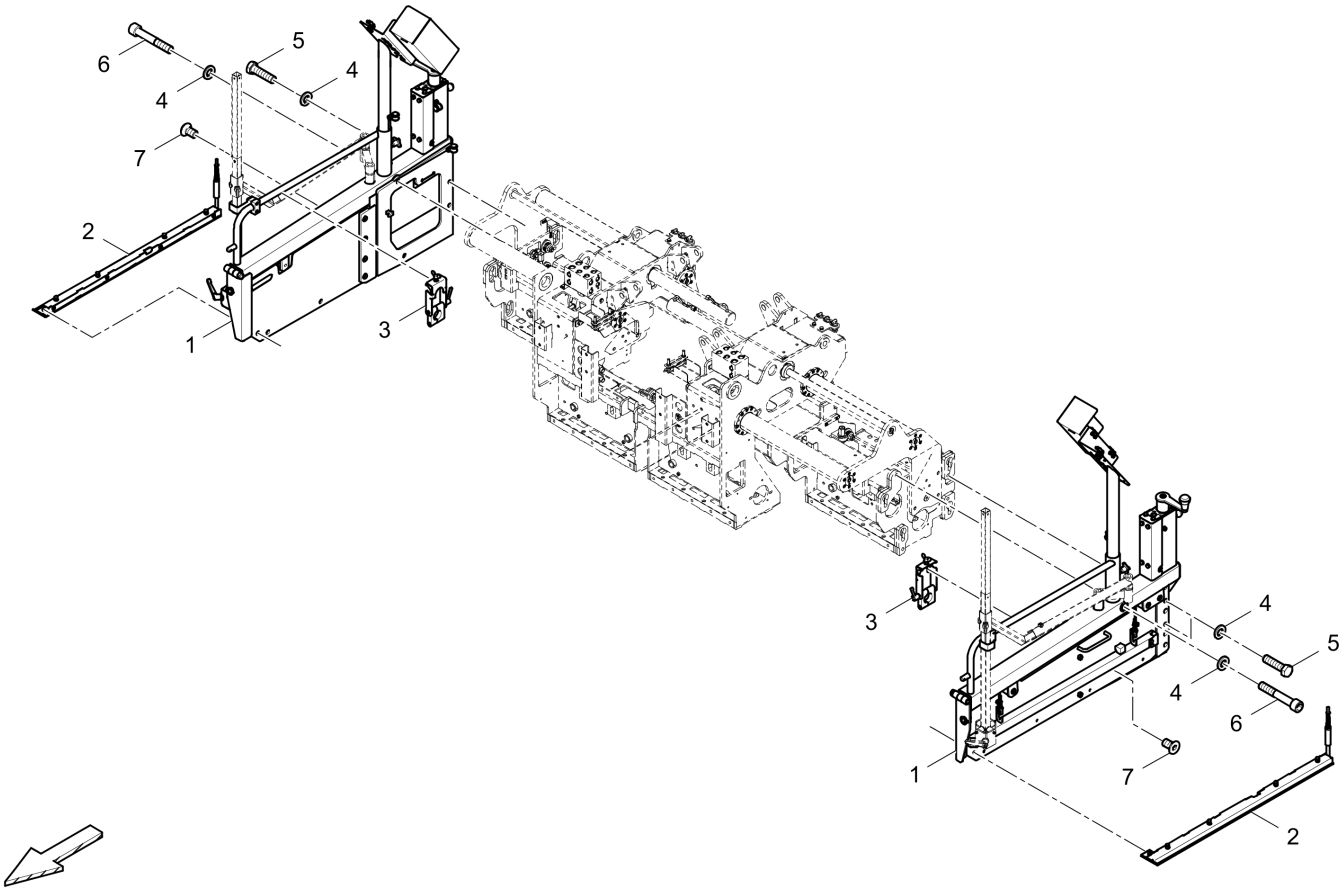

Item	Part No.	Name	Qty	L	C	SN INFO
1	4812061589	End plate, cpl	1			
1	4812064152	End plate, cpl	1			Valid for s/n 3103356, 3103717, 3103718, ff
2	4812061604	El. Heating	1			
3	4812228334	Retainer	2			
4	0333310049	Lock washer	6			
5	0147196180	Screw hexagon	4			
6	0211196204	Hexagon socket head cap screw	2			
7	0216110048	Countersunk screw	2			

Referenced Pages

4812061554 Holder for remote control, l.h. 225

Referenced Pages

4812061574 End plate, l.h. 221

Referenced Pages

4812061580 Holder for remote control, r.h. 230

Referenced Pages

4812061588 End plate, r.h. 226

Referenced Pages

4812061589 End plate, cpl 220

Referenced Pages

4812064156 Holder for remote control, l.h. 236

Referenced Pages

4812064154 End plate, l.h. 232

Referenced Pages

4812064155 Holder for remote control, r.h. 241

Referenced Pages

4812064153 End plate, r.h. 237

Referenced Pages

4812064152 End plate, cpl 231

El. Heating 4812061604 El. Heating

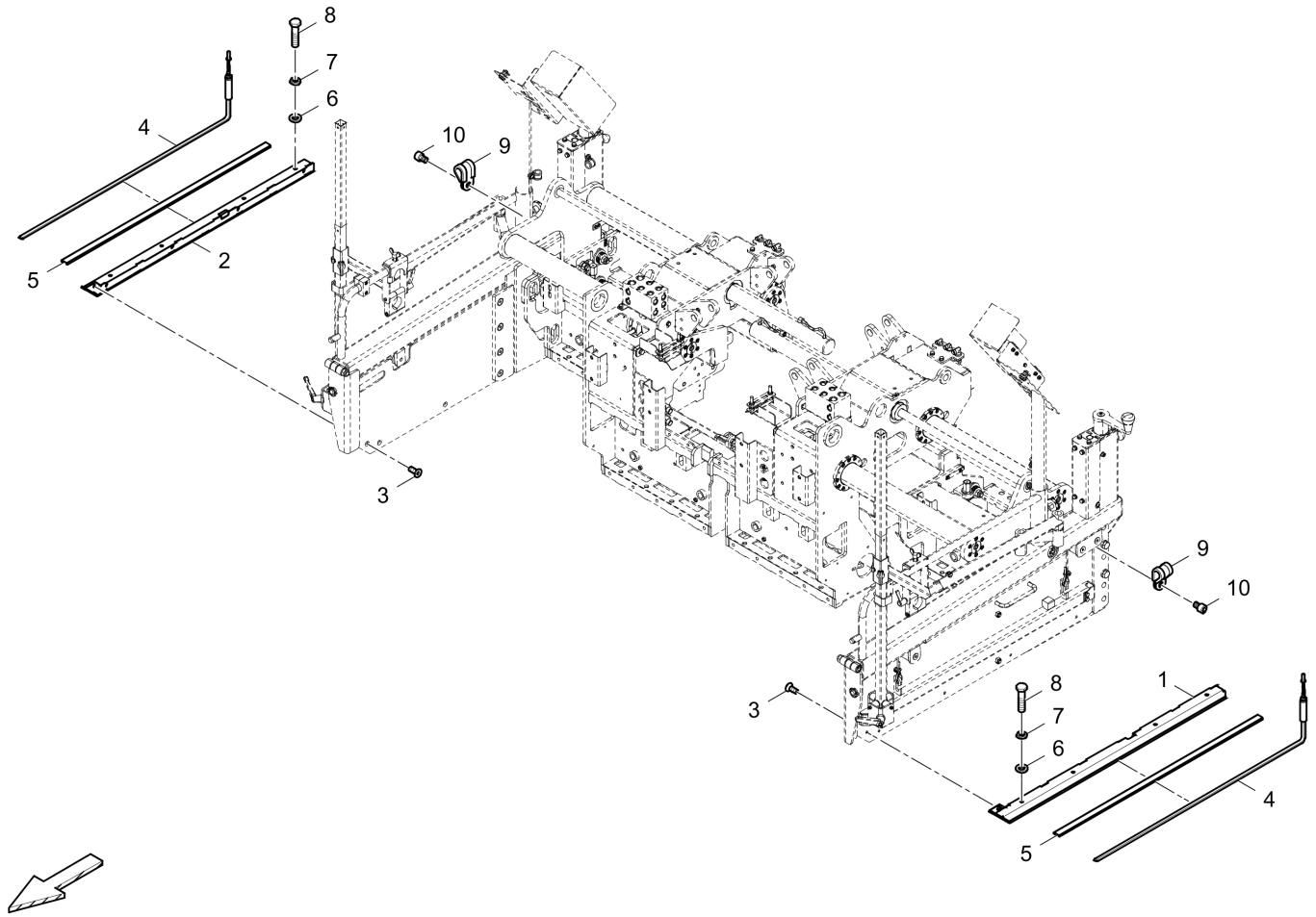

Item	Part No.	Name	Qty	L	C	SN INFO
1	4812063748	Slide plate, l.h.	1			
2	4812063750	Slide plate, r.h.	1			
3	0216195748	Hex.sock.screw	10			
4	4812071336	Flat tube heater	2			
5	4812081019	Jam profile	2			
6	0333310050	Lock washer	8			
7	0261211000	Nut	8			
8	0147132712	Screw DIN933	8			
9	D934362099	Pipe clamp	2			
10	0211132003	Screw	2			

Referenced Pages

4812228334 Retainer 242

End plate unheated with skid, l.h. & r.h. 4812061625 End plate unheated with skid, l.h. & r.h.

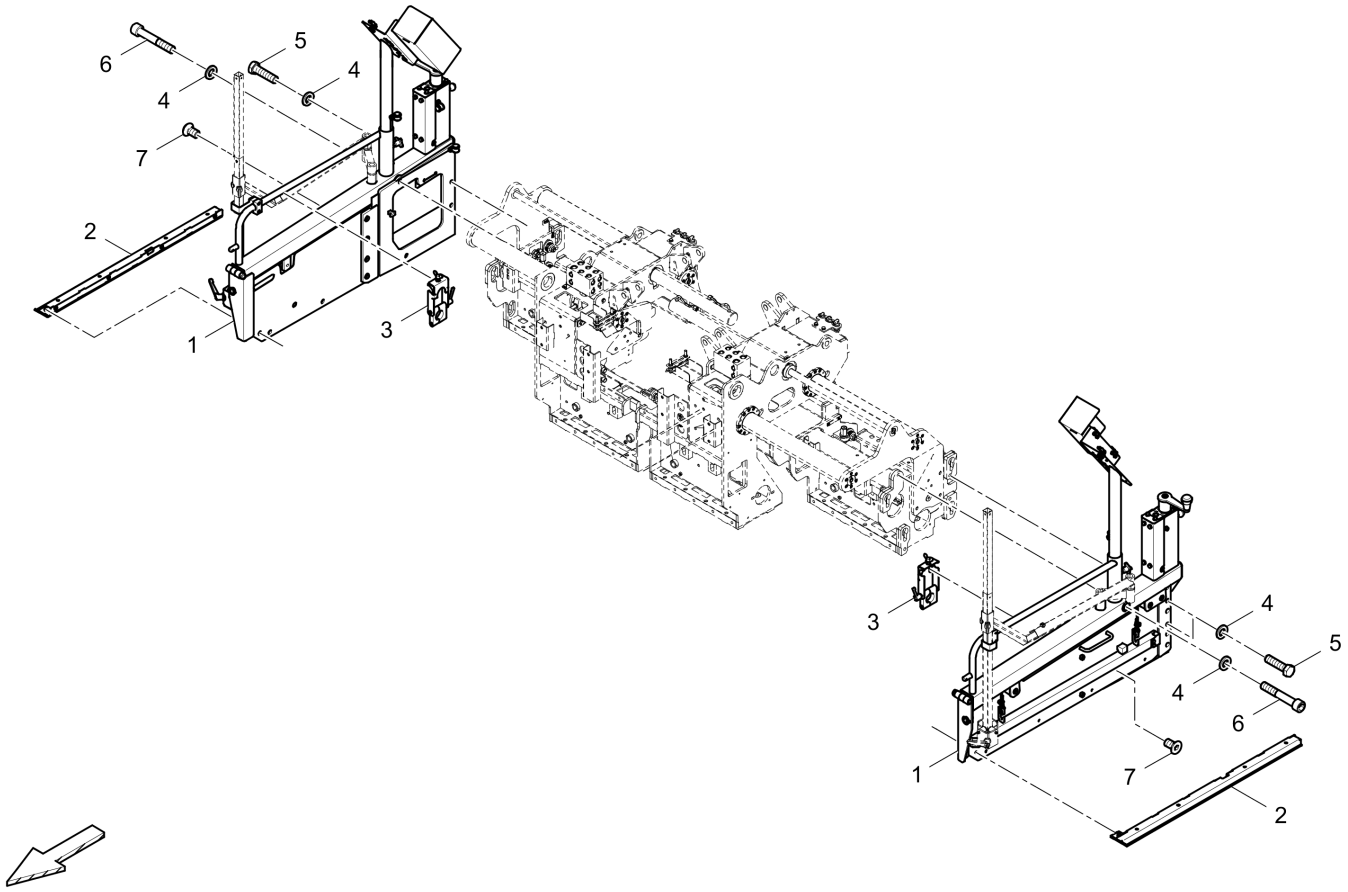

Item	Part No.	Name	Qty	L	C	SN INFO
1	4812061589	End plate, cpl	1			
1	4812064152	End plate, cpl	1			Valid for s/n 3103356, 3103717, 3103718, ff
2	4812061605	Slide plate	1			
3	4812228334	Retainer	2			
4	0333310049	Lock washer	6			
5	0147196180	Screw hexagon	4			
6	0211196204	Hexagon socket head cap screw	2			
7	0216110048	Countersunk screw	2			

Referenced Pages

4812061554 Holder for remote control, l.h. 225

Referenced Pages

4812061574 End plate, l.h. 221

Referenced Pages

4812061580 Holder for remote control, r.h. 230

Referenced Pages

4812061588 End plate, r.h. 226

Referenced Pages

4812061589 End plate, cpl 220

Referenced Pages

4812064156 Holder for remote control, l.h. 236

Referenced Pages

4812064154 End plate, l.h. 232

Referenced Pages

4812064155 Holder for remote control, r.h. 241

Referenced Pages

4812064153 End plate, r.h. 237

Referenced Pages

4812064152 End plate, cpl 231

Slide plate 4812061605 Slide plate

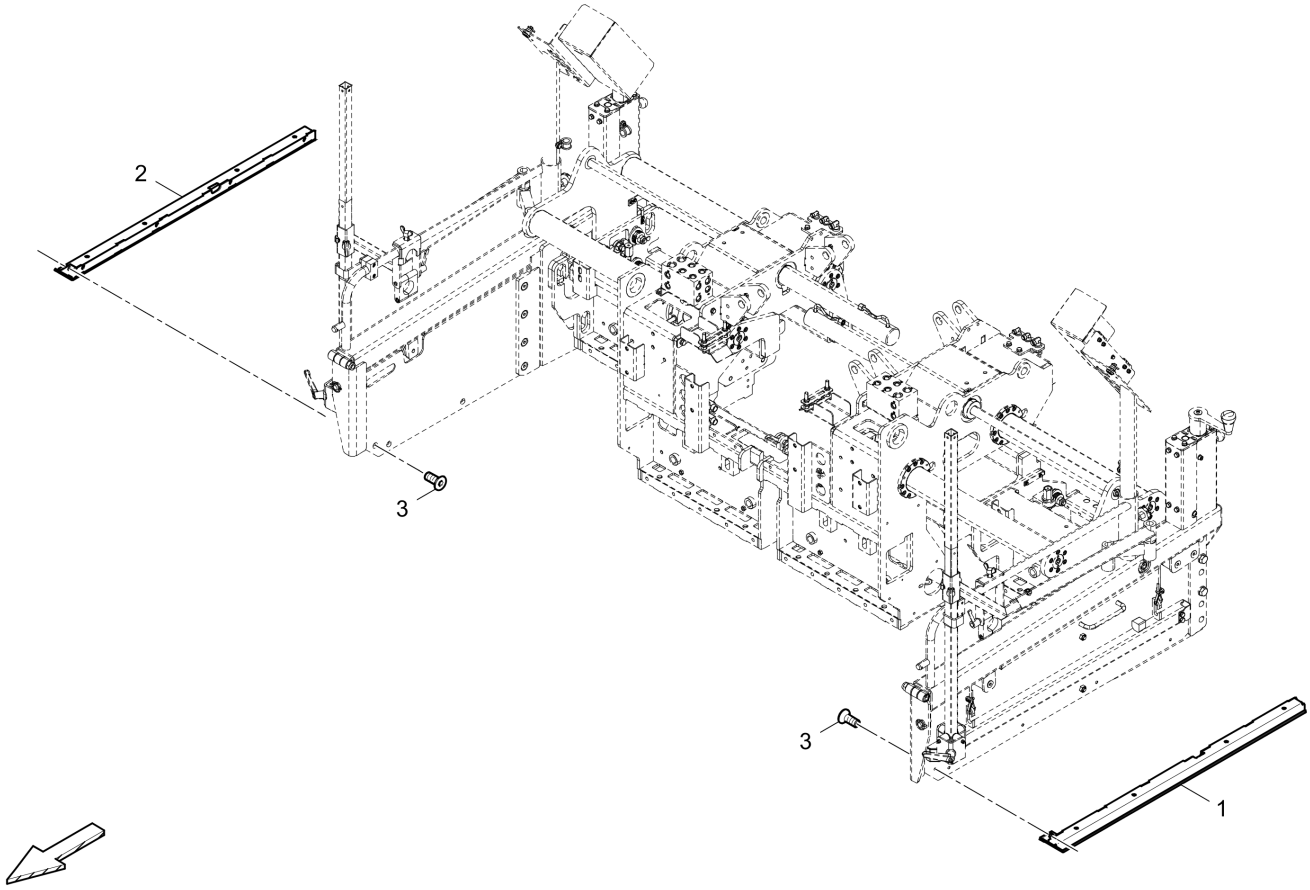

Item	Part No.	Name	Qty	L	C	SN INFO
1	4812063748	Slide plate, l.h.	1			
2	4812063750	Slide plate, r.h.	1			
3	0216195748	Hex.sock.screw	10			

Referenced Pages

4812228334 Retainer 242

4812000059 Kit retainer height adjustment Gradeline 4812000059 Kit retainer height adjustment Gradeline

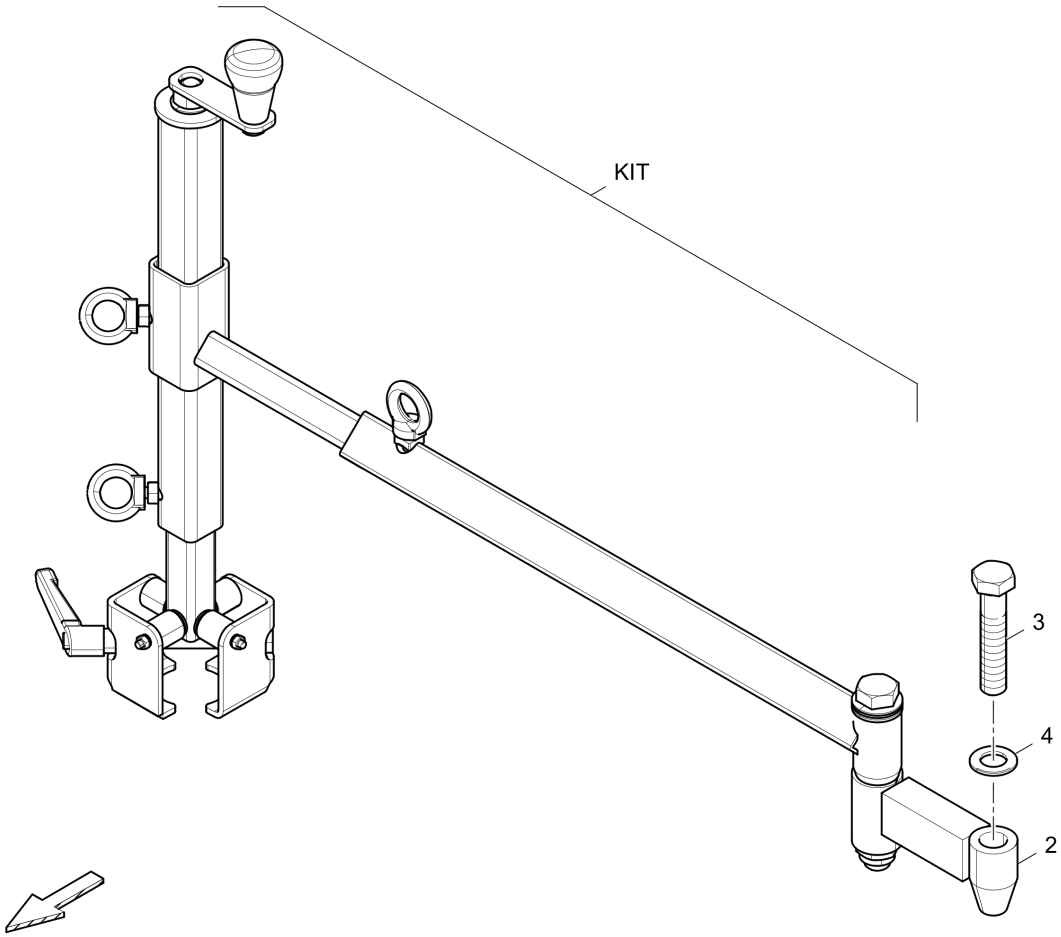

Item	Part No.	Name	Qty	L	C	SN INFO
KIT	D275131700	Retainer height adjustment Gradeline	2			
2	4720005224	Intermediate piece	2			
3	0147156103	Screw	2			
4	0300027413	Washer DIN125	2			

D275131700 Retainer highth adjustment Gradeline D275131700 Retainer height adjustment Gradeline

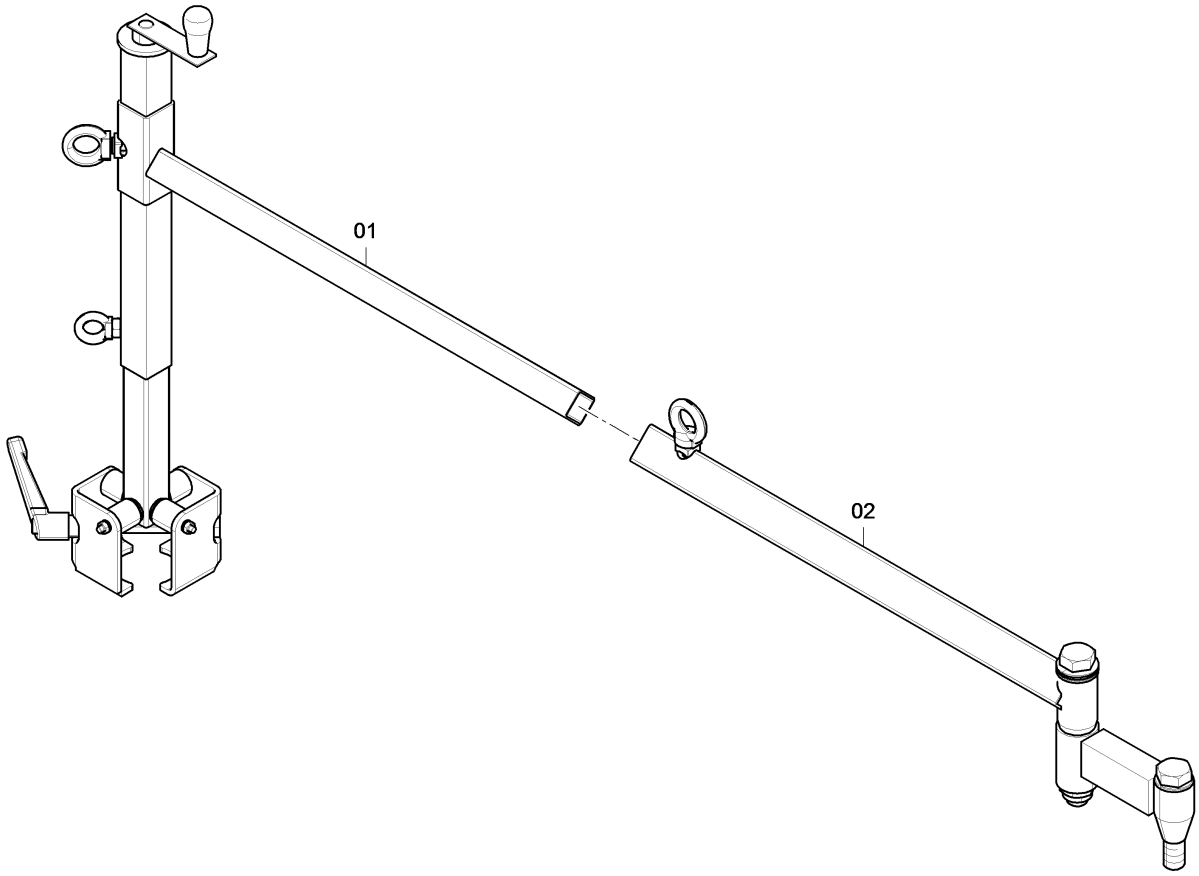

Item	Part No.	Name	Qty	L	C	SN INFO
1	4720006889	Adjusting spindle	1			
2	4720007201	Swinging arm	1			

Adjusting spindle 4720006889 Adjusting spindle

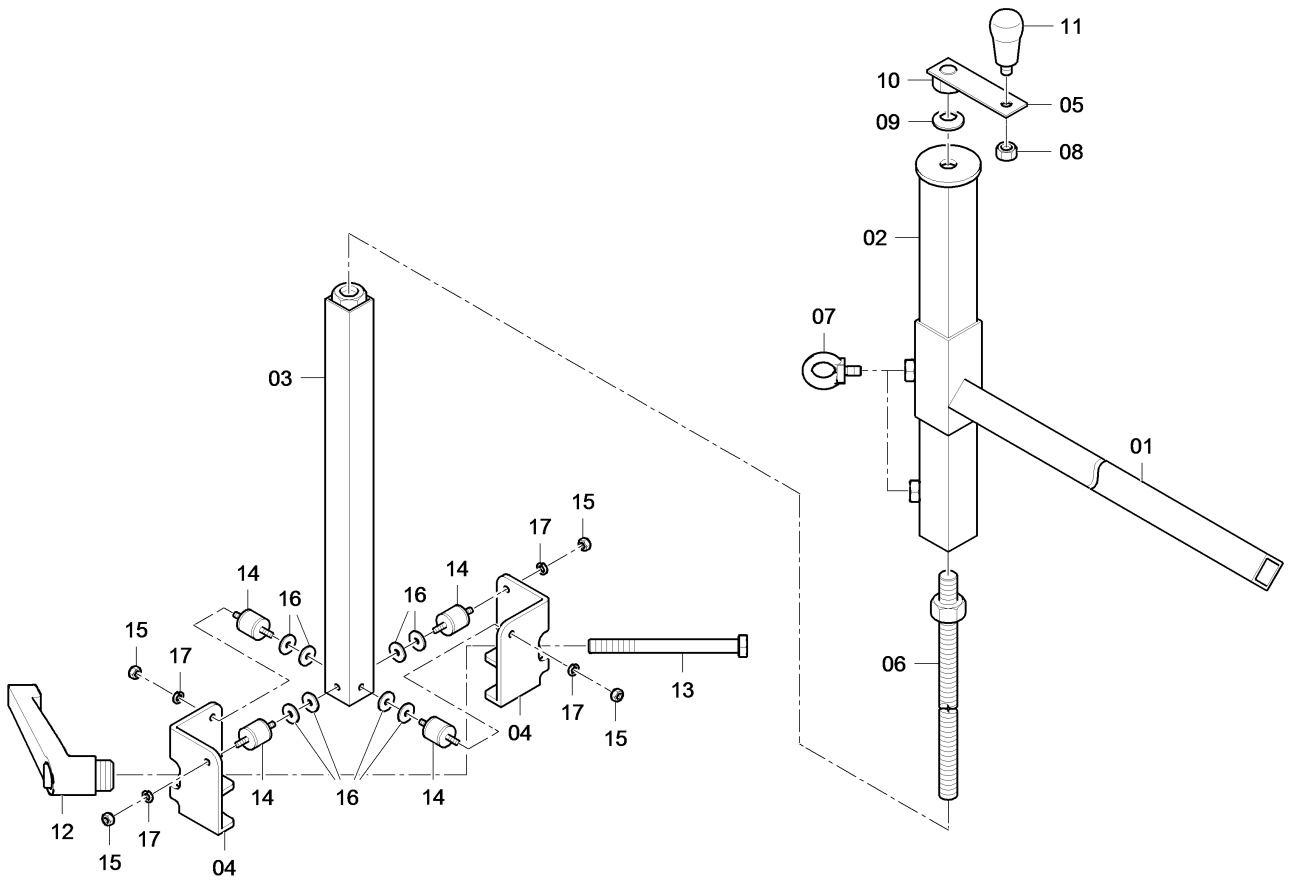

Item	Part No.	Name	Qty	L	C	SN INFO
1	4720004841	Extension	1			
2	4720004840	Guide	1			
3	4720004842	Guide	1			
4	4730011303	Angle retainer	2			
5	4732303238	Plate	1			
6	4730011037	Threaded rod	1			
7	0223195716	Butterfly screw	2			
8	0266211100	Nut hexagon	2			
9	4749900508	Cup spring	1			
10	0266211400	Hexagon nut M16	1			
11	4749302381	Handle	1			
12	4749301737	Clamping	1			
13	0147141903	Hex. head screw	1			
14	4749300884	Rubber buffer	4			
15	5730015118	Hexagon nut	8			
16	0300013047	Flat washer	8			

Item	Part No.	Name	Qty	L	C	SN INFO
17	0333310045	Schnorr-lock washer	8			

Swinging arm 4720007201 Swinging arm

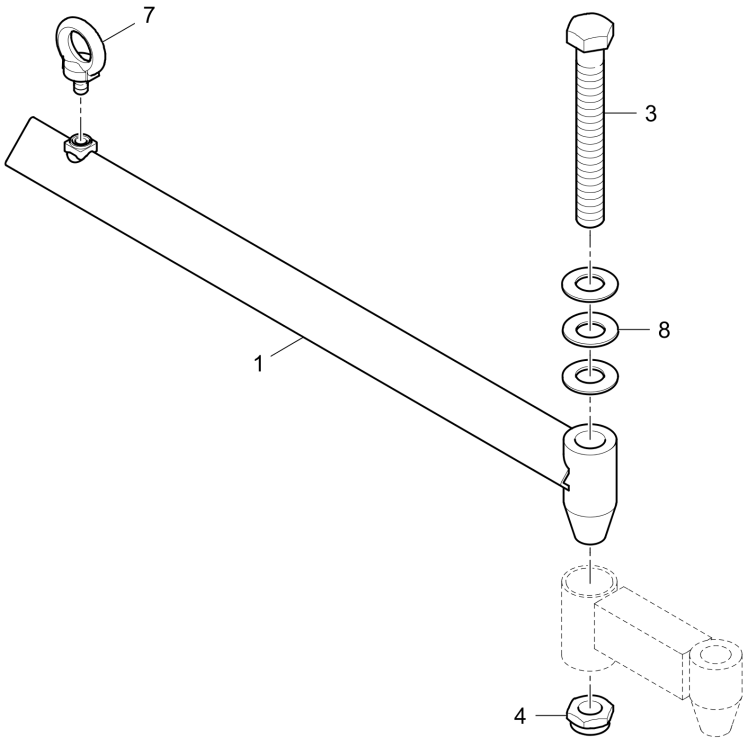

Item	Part No.	Name	Qty	L	C	SN INFO
1	4720005223	Swivel arm	1			
3	4749901794	Screw	1			
4	5730007674	Hexagon nut	1			
7	0371110021	Lifting eye	1			
8	D932800740	Cup spring	3			

4812015870 Retainer hight adjustment 4812015870 Kit, height adjustment MOBA-MATIC

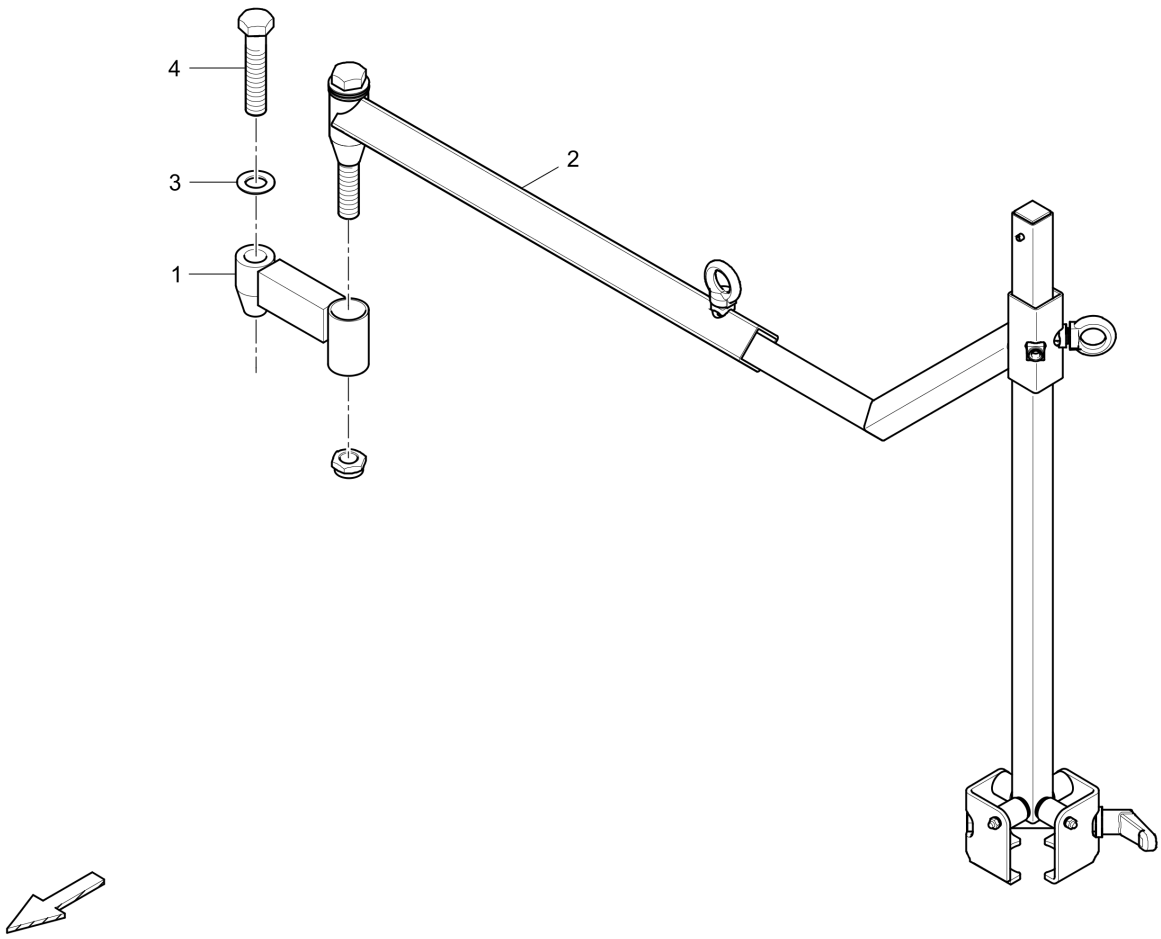

Item	Part No.	Name	Qty	L	C	SN INFO
1	4720005224	Intermediate piece	2			
2	4720005918	Grade control	2			
3	0300027413	Washer DIN125	2			
4	0147156103	Screw	2			

Retainer hight adjustment Moba 4720005918 Extension arm

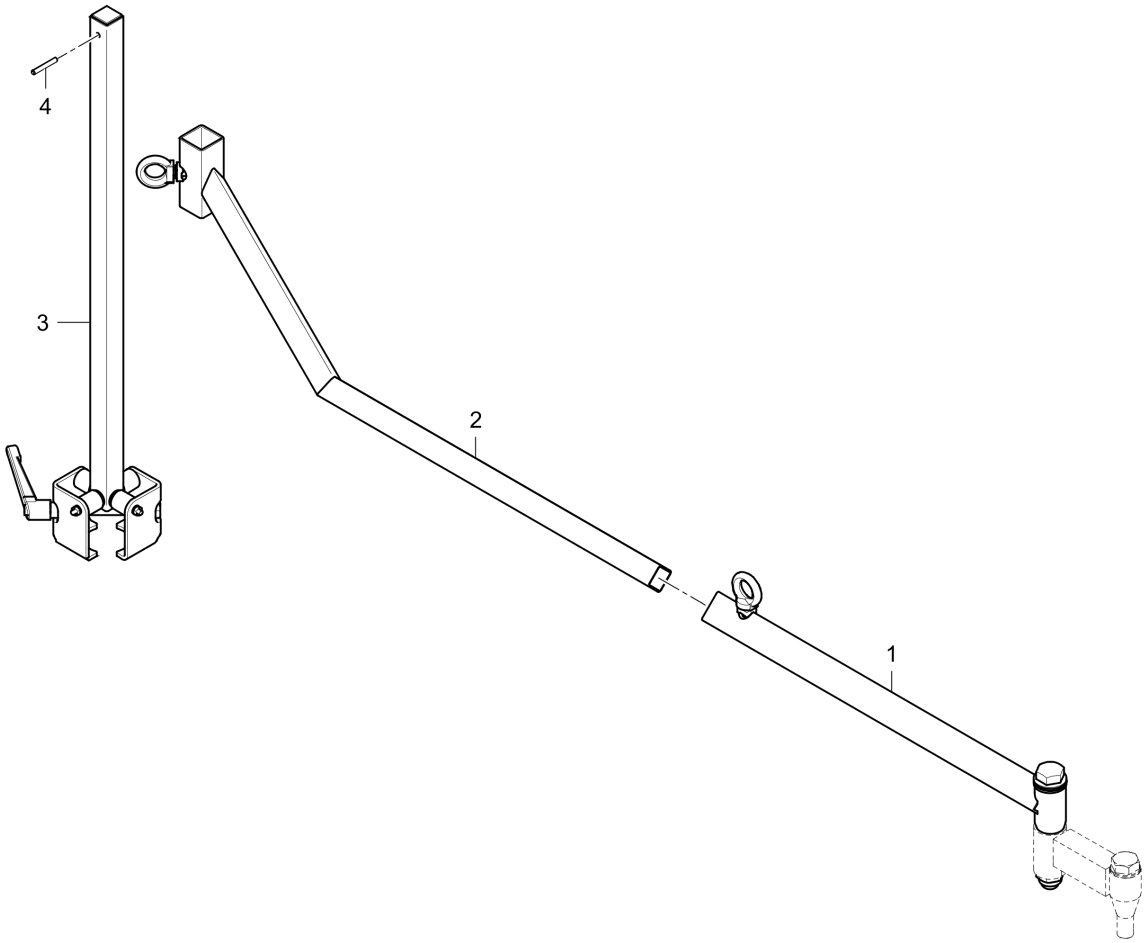

Item	Part No.	Name	Qty	L	C	SN INFO
1	4720007201	Swinging arm	1			
2	4720005790	Extension arm	1			
3	4720007200	Height regulator holder, compl.	1			
4	D931500924	Dowel pin	1			

Referenced Pages

4720007201 Swinging arm 265

Extension arm 4720005790 Extension arm

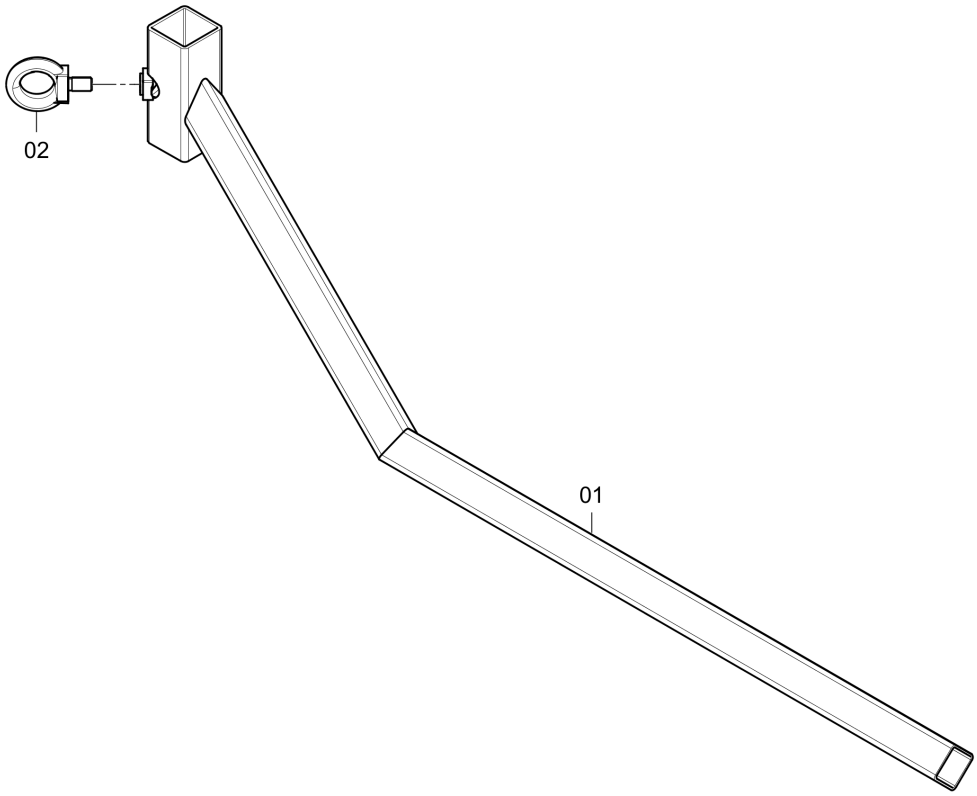

Item	Part No.	Name	Qty	L	C	SN INFO
01	4812001634	extension arm	1			
02	0371110021	Lifting eye	1			

Height regulator holder, cpl. 4720007200 Height regulator holder, compl.

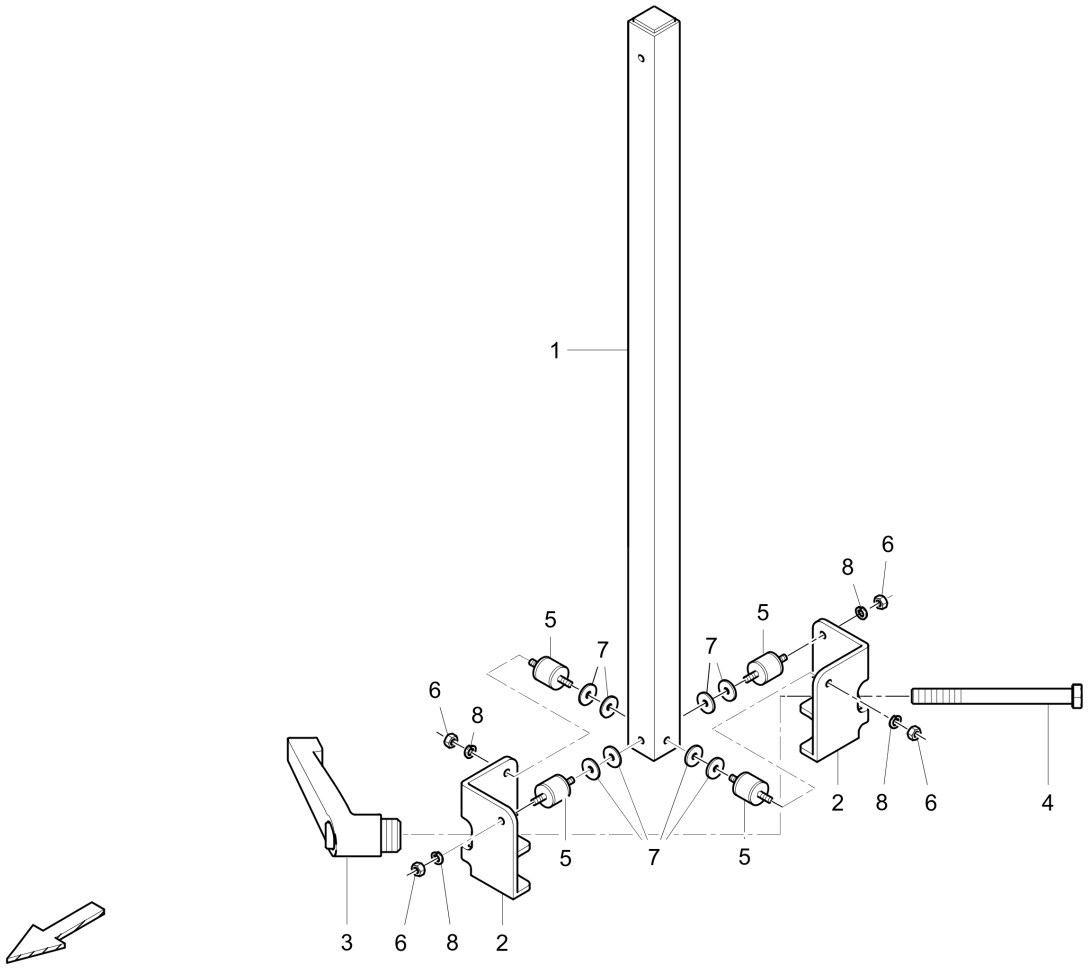

Item	Part No.	Name	Qty	L	C	SN INFO
1	4720005919	Guide, lower	1			
2	4730011303	Angle retainer	2			
3	4749301737	Clamping	1			
4	0147141903	Hex. head screw	1			
5	4749300884	Rubber buffer	4			
6	5730015118	Hexagon nut	8			
7	0300013047	Flat washer	8			
8	0333310045	Schnorr-lock washer	8			

4812061383 Levelling equipment 4812061383 Levelling equipment

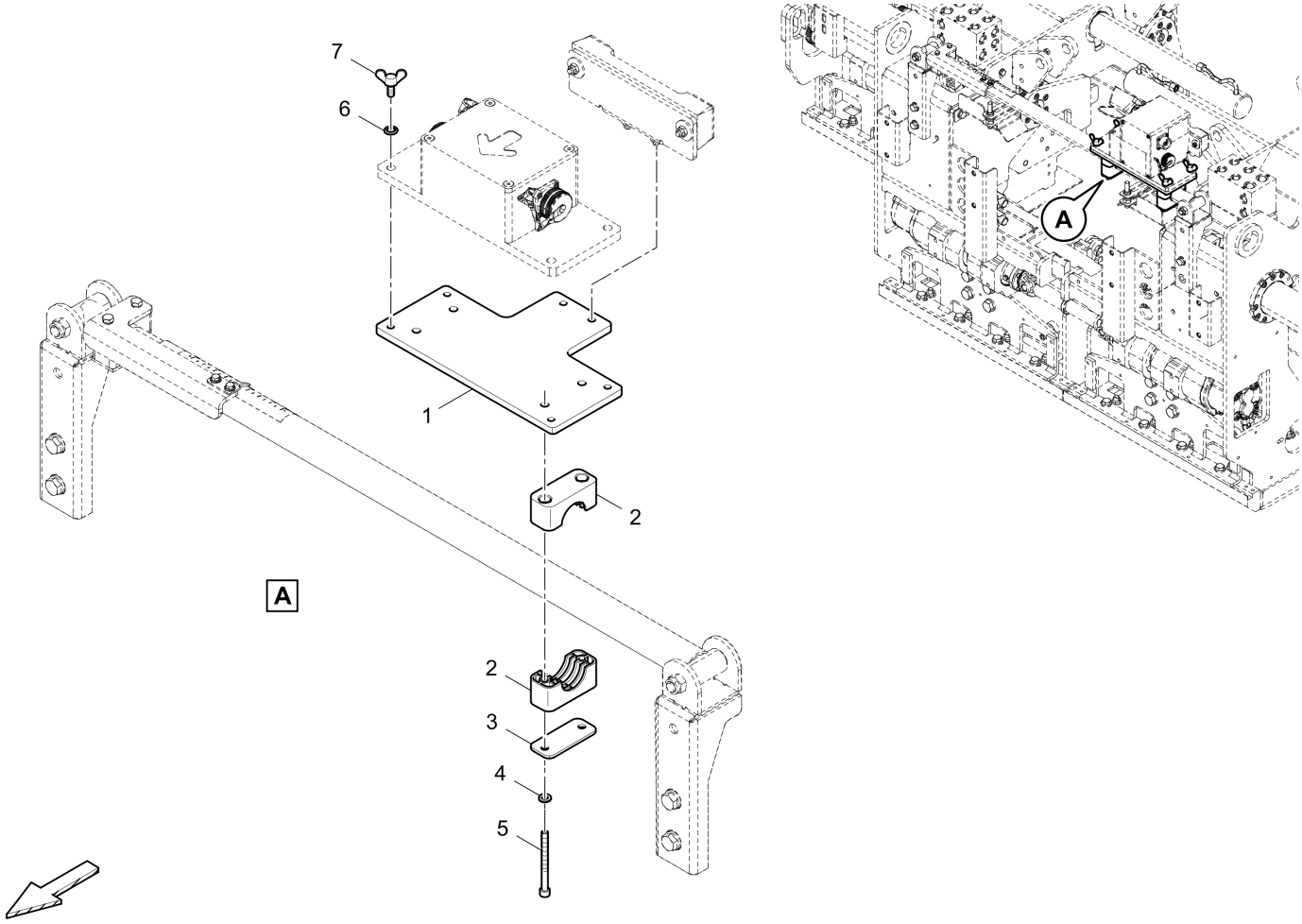

Item	Part No.	Name	Qty	L	C	SN INFO
1	4812060934	Retainer	1			
2	4812015544	Jaw	2			
3	4812034068	Cover plate	2			
4	0333310055	Washer	4			
5	0211125803	Hexagon socket head cap screw	4			
6	0333310036	Schnorr-lock washer	4			
7	0223195721	Wing screw	4			

4812074662 Levelling bar 4812074662 Levelling bar

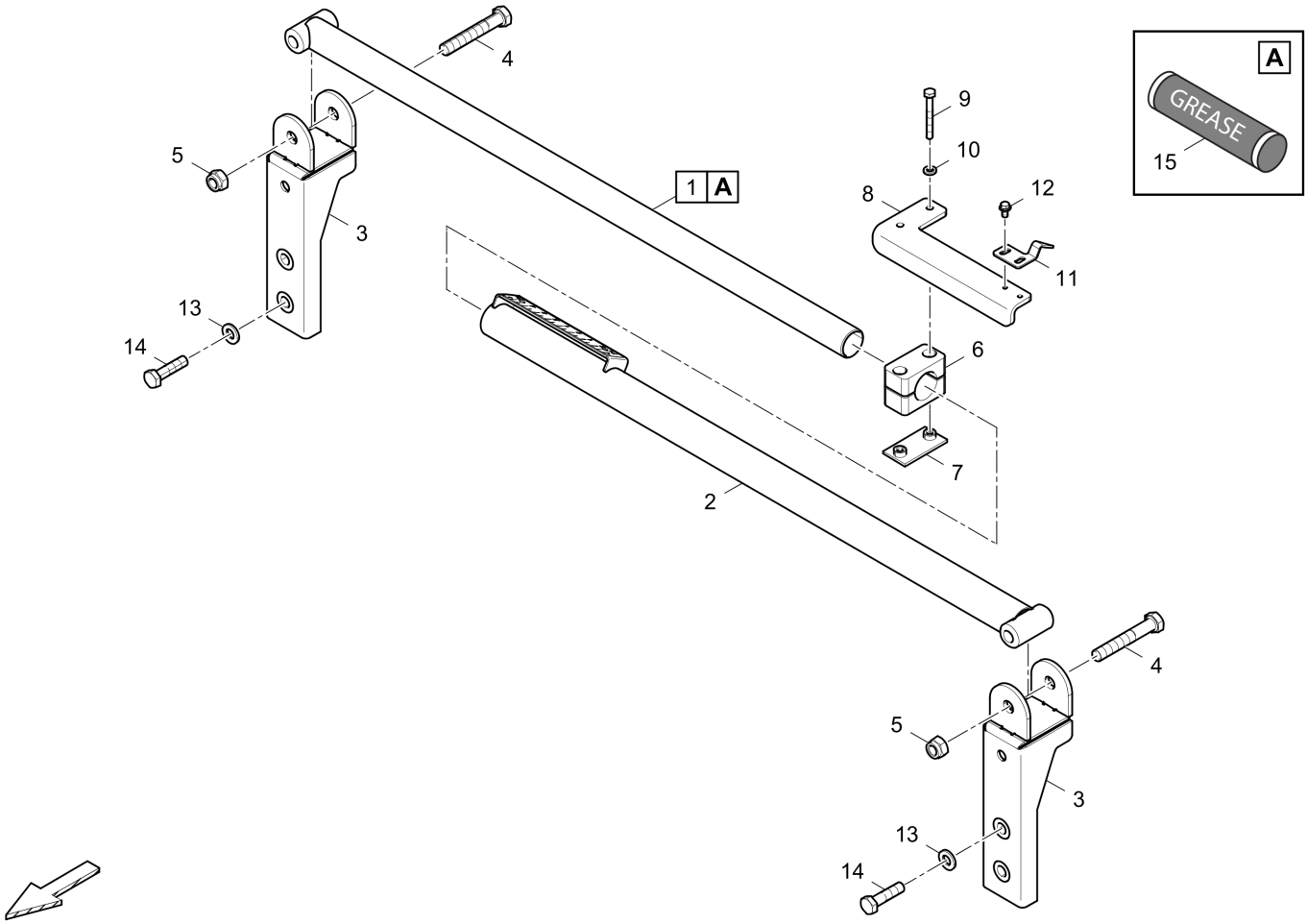

Item	Part No.	Name	Qty	L	C	SN INFO
1	4812061386	Bar	1			
2	4812074661	Bar	1			
2.1	4812074350	Bar	1			
2.2	4812074344	Scale	1			
2.3	4749302039	Blind rivet	2			
3	4812061387	Retainer	2			
4	0147141003	Hexagon bolt	2			
5	5730008013	Hexagon nut	2			
6	4749300005	Clamp	1			
7	D934324104	Plate	1			
8	4812074345	Pointer holder	1			
9	0147125403	Bolt	2			
10	0333310055	Washer	2			
11	4812074337	Pointer	1			
12	0147300075	Tensilock screw	2			
13	0333310051	Lock washer	4			

Item	Part No.	Name	Qty	L	C	SN INFO
14	0147196264	Bolt	4			
15	4812060753	Multipurpose-grease	1			

4720006020 Adapter kit for level 4720006020 Level

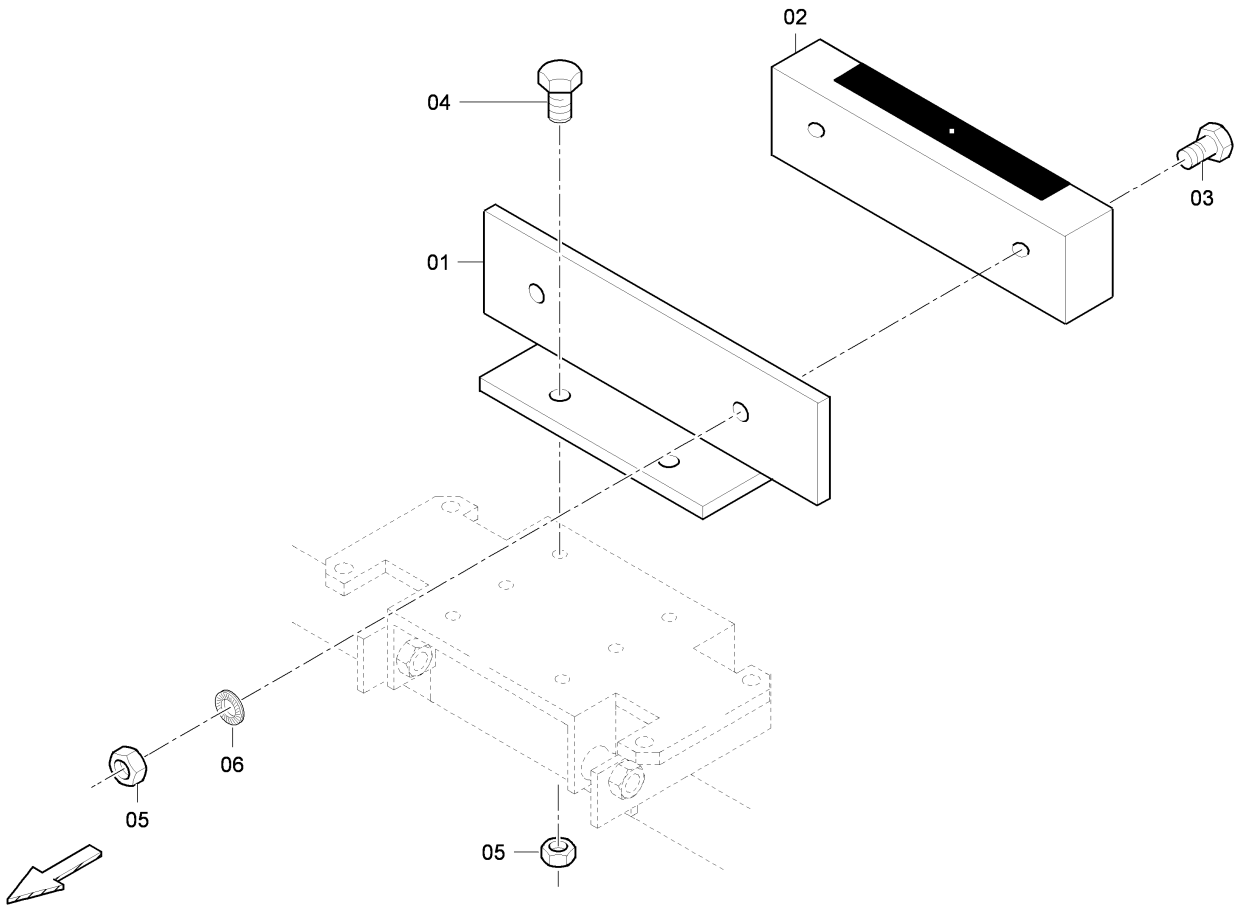

Item	Part No.	Name	Qty	L	C	SN INFO
1	4730012401	Retainer	1			
2	4749300917	Level	1			
3	0147125212	Hex. head screw	2			
4	0147124703	Hex.bolt	2			
5	0291118507	Nut	4			
6	0300013047	Flat washer	2			

4812076864 Sonic sensor, auger con. 4812076864 Sonic sensor, auger

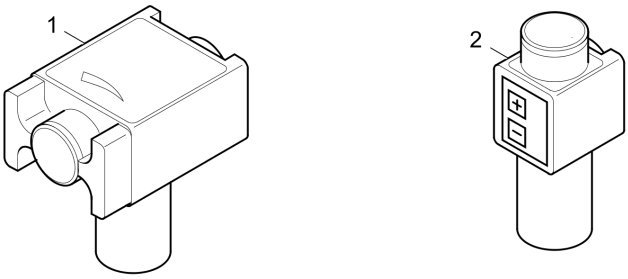

Item	Part No.	Name	Qty	L	C	SN INFO
1	4812076873	Sonic sensor, auger	1			
2	4812076874	Electric, sonic sensor	1			

Electric, sonic sensor 4812076873 Electric, sonic sensor

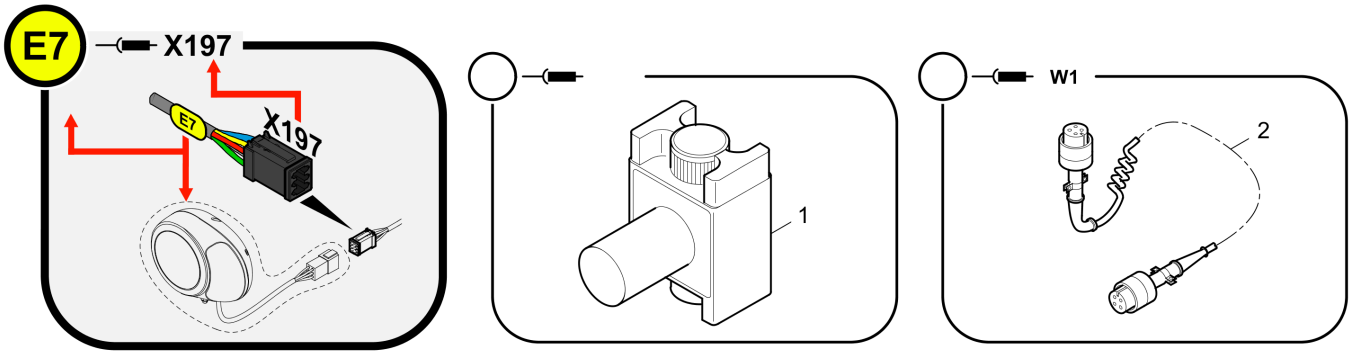

Item	Part No.	Name	Qty	L	C	SN INFO
1	4749100573	Sensor	1			
2	4812018983	Harness	1			

Electric, sonic sensor 4812076874 Electric, sonic sensor

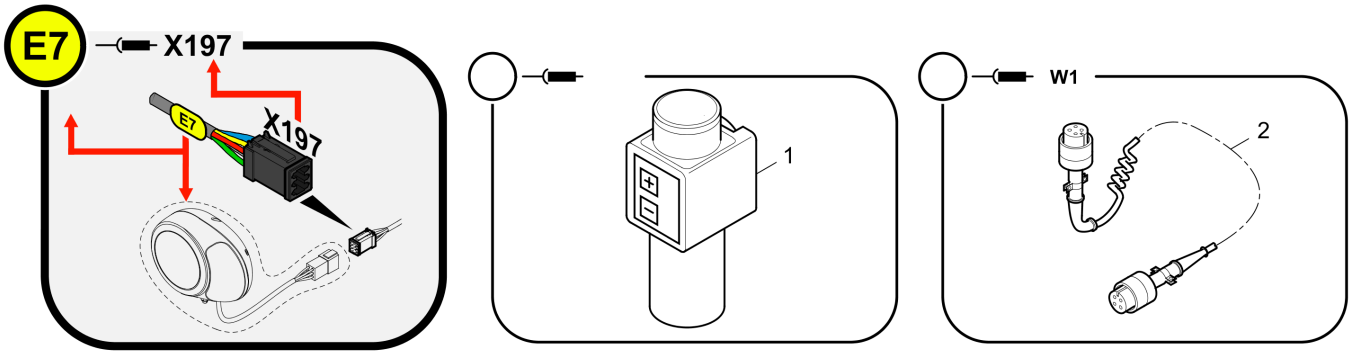

Item	Part No.	Name	Qty	L	C	SN INFO
1	4812076486	Sonic sensor	1			
2	4812018983	Harness	1			

4812082524 Material thickness measurement cpl. 4812082524 Material thickness measurement

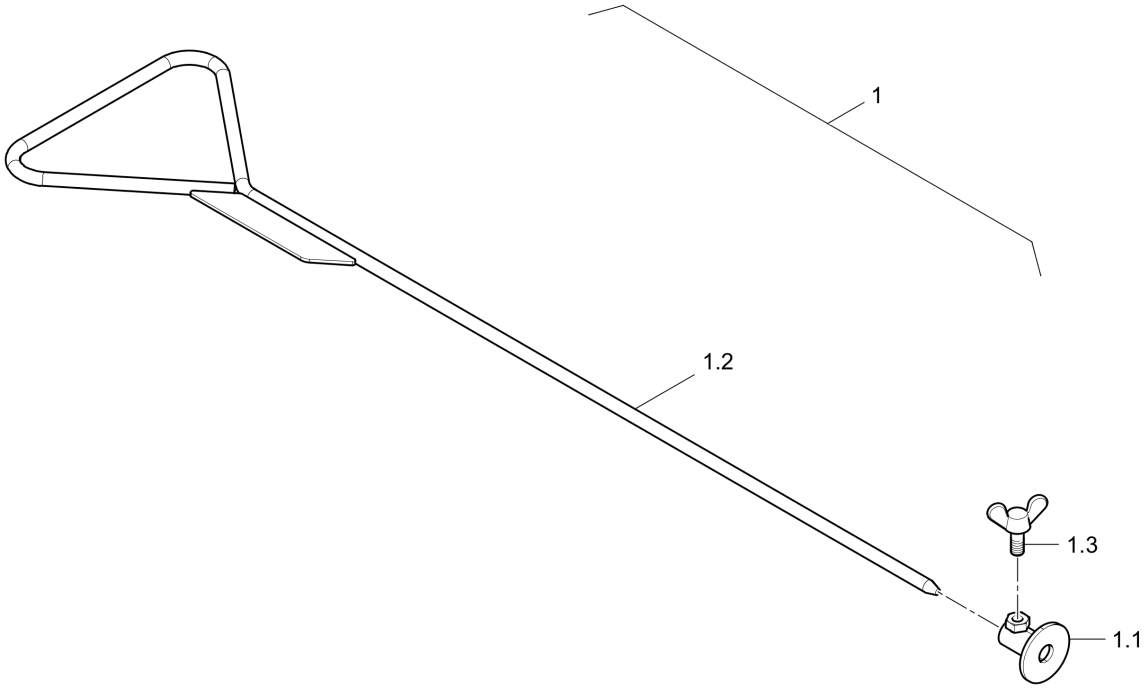

Item	Part No.	Name	Qty	L	C	SN INFO
1	4812082100	Material thickness measurement	1			
1.1	4812081817	Adjustment gauge	1			
1.2	4812082101	Handle bar	1			
1.3	0223195711	Butterfly screw	1			

Decals, TV 4812018578 Decals

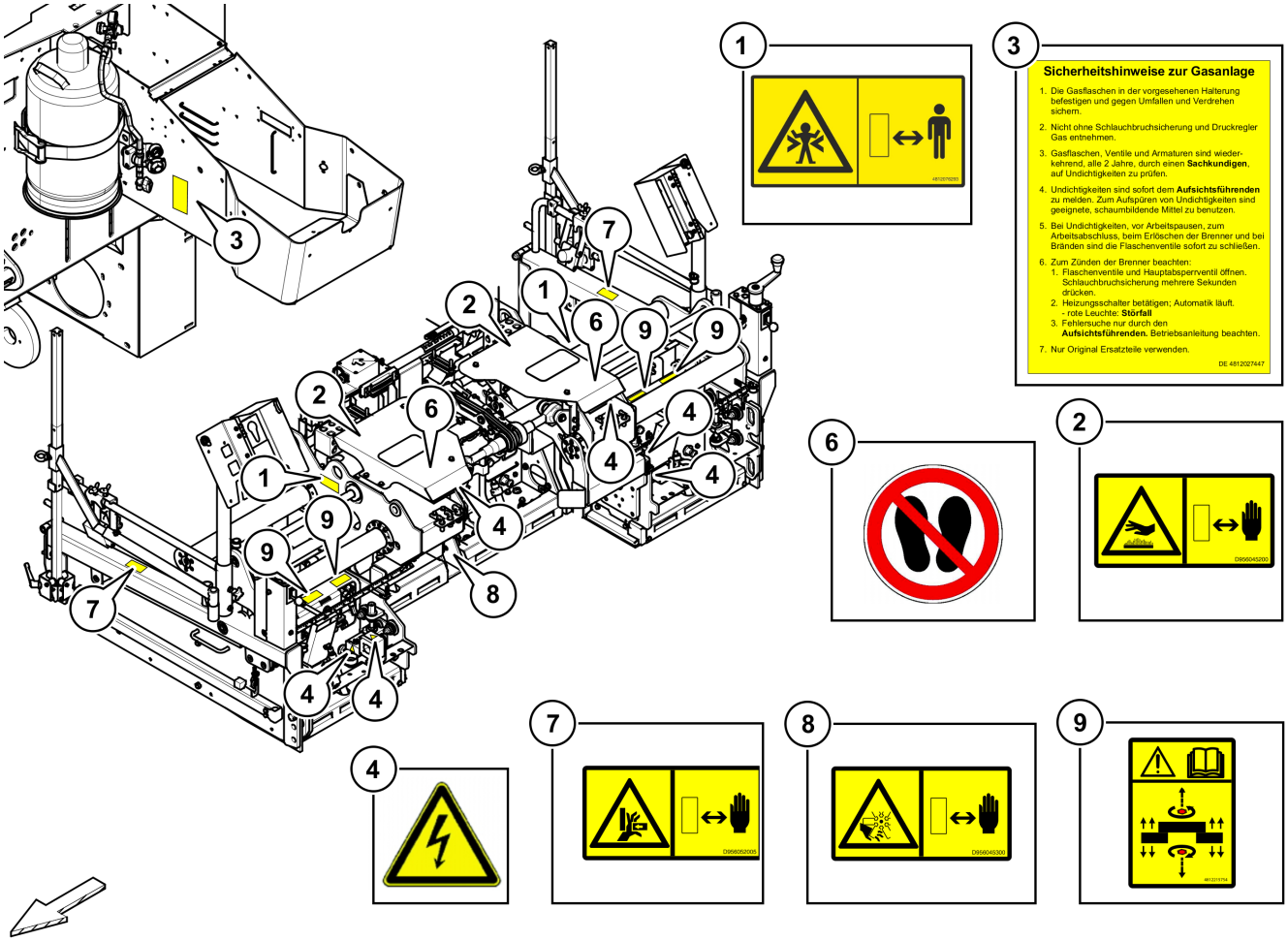

Item	Part No.	Name	Qty	L	C	SN INFO
1	4812076293	Warning sign: Danger of violent pressure	2			
2	D956045200	Warning sign: Hot surface	2			
3	4812027447	Decal safety gas DE	1			
4	1088100101	Warning mark	6			
6	4812031690	Prohibitive sign 'Do not step on'	2			
7	D956052005	Warning sign: Hand injuries	2			
8	D956045300	Warning plate	1			
9	4812215754	Warning decal Read instruction manual	4			

Decals, TVE 4812018579 Decals

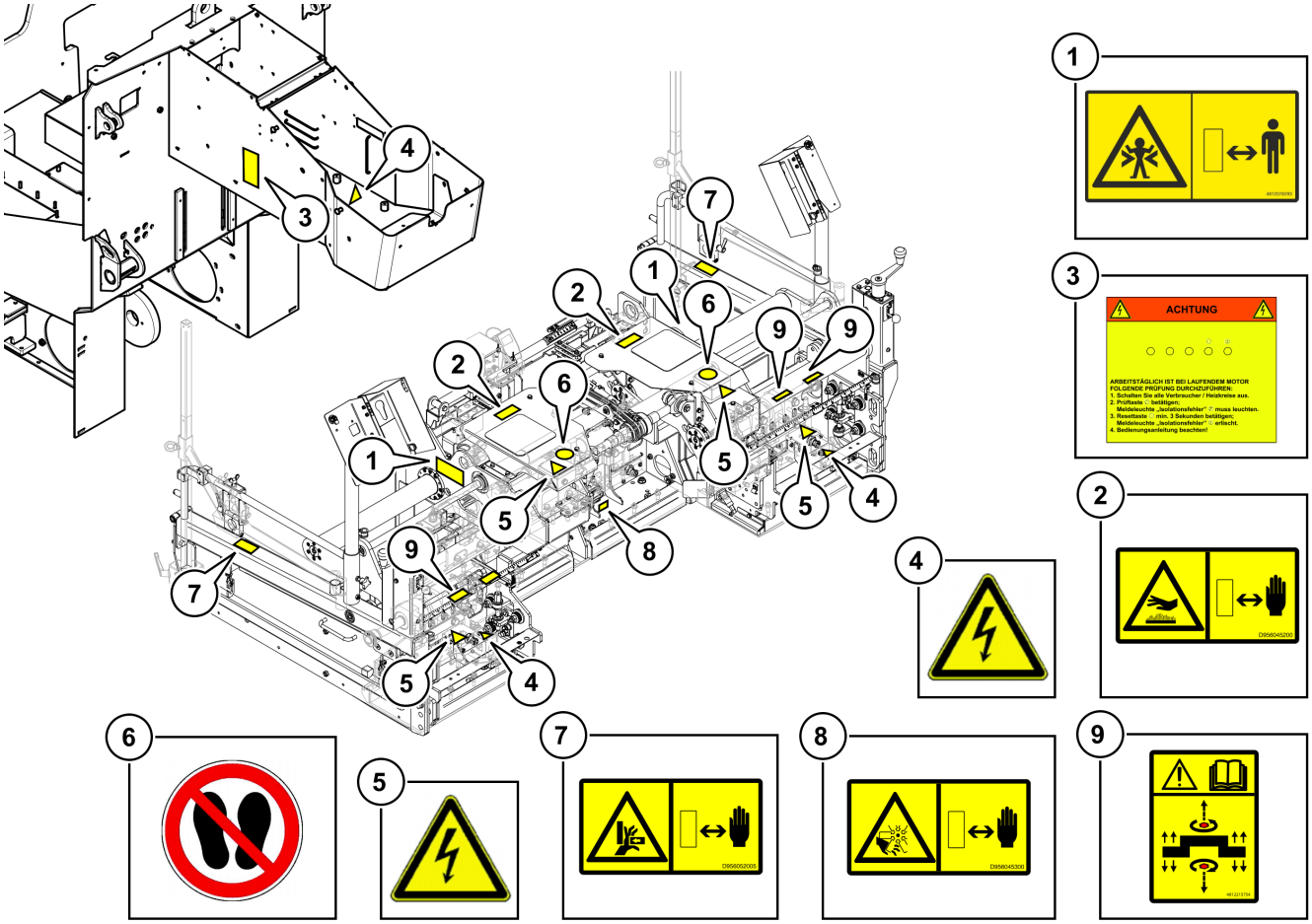

Item	Part No.	Name	Qty	L	C	SN INFO
1	4812076293	Warning sign: Danger of violent pressure	2			
2	D956045200	Warning sign: Hot surface	2			
3	4812019719	Decal control elec. heating system DE	1			
4	1088100101	Warning mark	3			
5	1088100102	Warning mark	4			
6	4812031690	Prohibitive sign 'Do not step on'	2			
7	D956052005	Warning sign: Hand injuries	2			
8	D956045300	Warning plate	1			
9	4812215754	Warning decal Read instruction manual	2			

Any unauthorized use or copying of the contents or any part thereof is prohibited. This applies in particular to trademarks, model denominations, part numbers, and drawings.