Parts Catalogue

DYNAPAC
FAYAT GROUP

CC5200 VI

Vibratory roller

CC5200 VI s/n 10000404xxA019228 -
Cummins QSF 3.8 T4F (97kW)

© 2018 Dynapac Compaction Equipment AB | No. 4812162077| 2018-10

Your Partner
on the Road Ahead

dynapac.com

General information

Use only authorized parts. Any damage or malfunction caused by the use of unauthorized parts is not covered by Warranty or Product Liability.
Any unauthorized use or copying of the contents or any part thereof is prohibited. This applies in particular to trademarks, model denominations, part numbers, and drawings.

Instructions for use
This spare parts list contains no safety regulations and is merely intended to assist in the ordering of spare parts.
For information about operating, servicing, or repairing, the relevant Safety and operating instructions must be consulted at all costs.
Please observe the safety instructions listed in the relevant Safety and operating instructions!

CC5200 VI (IV/T4f) SN 10000404xxA019228 - 1

Service kits

4812160752 Service kit, 50h 3
4812161474 Service kit, 500h 5
4812161475 Service kit, 1000h 7
4812161476 Service kit, 2000h 9

Repair kits

4700945903 Eccentric shaft kit 11
4700938891 Drum rotation kit 13
4812161597 Shock absorber kit, drum 15
4812161595 Scraper blade kit 17

Frame

Frame and hitch 19
Front frame module, offset 21
Cover assembly 23
Drum cover module 25
Hitch module 27
4812117737 Articulated joint 29
Rear frame module 31
Front ending module, offset 33
Cover plates, front ending 35
Step and handle, front right 37
Rear ending module 39
Cover plates, rear ending 41
Scrapers 43
Scraper module 45
4700394340 Scraper bracket, cpl 47
Grab handle, lift 49
Bracket module 51
Bracket module 53
Grab handle, lift 55
Grab handle module 57
Grab handle, release 59
Sprinkler system 61
Sprinkler pump module 63
Water tank module, offset 65
Filling pipe module 69
Locking device 71
Sprinkler hoses 73
Scraper module, with nozzles 75
Sprinkler tank module, rear 77
Sprinkler tank, rear 79
Sprinkler hose module, extra tank rear 81

Drum

Drum 83
Drum drive 85
Drum bearing 87
Drum suspension 89
Weight module 40kg 91
Weight module 10kg 93

Engine

Engine assembly 95
4812124294 Engine Cummins QSF 3.8 T4 97
Engine bracket module 99
Belt guard module 101
Air filter module 103
Exhaust system module 105
Cooling system 109
Cooler stand module 111

Cooling air casing . . . 113
Charge air cooler mounted . . . 115
Water cooler system . . . 117
Expansion tank module . . . 119
Fuel system . . . 121
Fuel tank module . . . 123
Fuel hose assembly . . . 125
DEF/Urea system . . . 127
DEF Equipment module . . . 129
Urea pump module . . . 133
Hose kit, urea . . . 135

Engine hoods - white
Engine hoods . . . 137
Engine hood module right . . . 139
Engine hood module left . . . 141
Engine hood module center . . . 145
Rear frame cover module, right . . . 147
Rear frame cover module, left . . . 149
Expansion tank cover module . . . 151

Engine hoods - yellow
Engine hoods . . . 153
Engine hood module right . . . 155
Engine hood module left . . . 157
Engine hood module center . . . 159
Expansion tank cover module . . . See page 151
Rear frame cover module, left . . . 161
Rear frame cover module, right . . . 163

Hydraulic system
Hydraulic system, filter, oil and leak - Std To 022079, Eco To 021550 . . . 165
Hydraulic system, filter, oil and leak - Std From 022080, Eco From 021551 . . . 169
Main hydraulic valve, cpl . . . 173
4812123244 Hydraulic valve . . . 175

Hydraulic pump module, Std To 022079, Eco To 021550
Hydraulic pump & connectors . . . 177

4700390602 Hydraulic pump
4700390602 Hydraulic pump . . . 179

4812155785 Hydraulic pump
4812155785 Hydraulic pump . . . 181
Rotating group, cpl . . . 184
Valve block, cpl . . . 187
Control module . . . 189
Flushing valve . . . 191

4812155786 Hydraulic pump
4812155786 Hydraulic pump . . . 193
Rotary group, cpl . . . 197
Valve block, cpl . . . 199

4812155787 Hydraulic pump
4812155787 Hydraulic pump . . . 201
Rotary group, cpl . . . 205
Valve block, cpl . . . 207

Hydraulic pump module, Std From 022080, Eco From 021551
Hydraulic pump & connectors . . . 209
Hydraulic tank mounted . . . 211
Propulsion system . . . 213
Vibration system . . . 217

4700395915 Hydraulic motor Vibration . . . 221
Hydraulic offset steering . . . 225
4812123052 Hydraulic cylinder . . . 227
Hydraulic system, fan & steering . . . 229
Fan module . . . 233
Hose bracket, cross sliding . . . 235
Brake system . . . 237

Electric system
Electric system, main harness . . . 239
Fuse and relay central module . . . 241
Ecu module . . . 243
Back-up alarm module . . . 245
Cable harnesses, speed, frequency and offset . . . 247
Swith module, 0-position . . . 249
Power supply, std . . . 251
Battery shelf module . . . 253
Battery holder . . . 255
Power supply, cab . . . 257

Driving-, direction and licence plate lights
Driving-, direction- & Licence plate lights . . . 259
Steering column switch module . . . 261
Driving lights module . . . 263
Turn signals . . . 265
Registration plate light . . . 267
Driving lights module, left rear . . . 269
Driving lights module, right rear . . . 271
Rotating beacon . . . 273
Drum edge lights . . . 275
Working lights Rops/Cab . . . 277
Dyn@Link . . . 279

Operator platform
Cab module . . . 281

4812122868 Cab asymmetric, comfort
4812122868 Cab asymmetric comfort . . . 283
Roof edges . . . 285
Windscreen and wipers, front . . . 287
Ceiling, lower panels . . . 289
Screens, wipers and switches, cab right side . . . 291
4812125328 Sliding window . . . 293
Interior, celing (lights, nozzles, hammer, hook, switch 2&3) . . . 295
Ventilation hoses, rear washer/wiper, power sockets . . . 297
Interior, front (air channel, loud speakers, antenna, relays, switch 1) . . . 299
AC Box . . . 301
Air condition installation (ACC) . . . 303
Door, left . . . 305
4812122883 Door . . . 307
4812125321 Sliding window, left . . . 309
Horn, power converter, protections . . . 311
Rear screen . . . 313

4812122869 Cab asymmetric, std
4812122869 Cab asymmetric std . . . 315
Roof edges . . . See page 285
Windscreen and wipers, front . . . See page 287
Ceiling, lower panels . . . See page 289
Screens, wipers and switches, cab right side . . . See page 291
4812125328 Sliding window . . . See page 293
Interior, celing (lights, nozzles, hammer, hook, switch 2&3) . . . See page 295
Ventilation hoses, rear washer/wiper, power sockets . . . See page 297
AC Box . . . See page 301

Heater installation . . . 317
Door, left . . . See page 305
4812122883 Door . . . See page 307
4812125321 Sliding window, left . . . See page 309
Horn, power converter, protections . . . See page 311
Rear screen . . . 319
ROPS module . . . 321

4812122870 ROPS
4812122870 ROPS . . . 323
Horn, power converter, protections . . . See page 311
Handrails, harness, power sockets . . . 325
Handrail assembly . . . 327
Roof edges . . . 329
Rear covers, storage . . . 331
Manual box . . . 333
Mirrors . . . 335
Mirrors . . . 337
Seat frame module . . . 339
Seat frame adapter module . . . 341
Control module, sliding/turning . . . 343
Floor cassette module . . . 345
Seat, galon suspensioned . . . 347
Seat comfort, fabric suspensioned . . . 349
Seat comfort, galon suspensioned . . . 351

Seat belts
Seat belt 2" . . . 353
Seat belt 2" with reminder . . . 355
Seat belt 3" . . . 357
Seat belt 3" with reminder . . . 359
Control module, 6 buttons . . . 361
Forward-reverse control module . . . 363
Display module . . . 365
Instrument panel cover module . . . 367

Accessories and decals
SMV sign . . . 369
Fire extinguisher . . . 371
Plain Dynapac decals, kit . . . 373
Color Dynapac . . . 375

Options

Air conditoning
Air conditioning . . . 378
Condensor module . . . 381
Drying filter module . . . 383
4812114257 Drying filter assy . . . 385
Compressor module . . . 387
Refrigerant hose kit . . . 389
Car stereo module 12V . . . 391
Asphalt temp meter . . . 393

Edge cutter
Edge cutter, front right . . . 395
Edge cutter, right . . . 397
Holder, edge cutter . . . 399
4812120738 Hydraulic cylinder . . . 401
Bearing unit . . . 403
Edge cutter, left . . . 405
Holder, edge cutter . . . 407
Holder module . . . 409
Pressing roller, module . . . 411

Cutting disc module 413
Appendix B:Parts Index 415

CC5200 VI (IV/T4f) SN 10000404xxA019228 -

Item	Part No.	Name	Qty	L	SN INFO
0	-	Service kits	1		
0	-	Repair kits	1		
1	-	Frame	1		
2	-	Drum	1		
3	-	Engine	1		
5	-	Hydraulic system	1		
6	-	Electrical Equipment	1		
7	-	Drivers platform	1		
8	-	Decals	1		
9	-	Optional equipment	1		

Service kits 4812160752 Service kit, 50h

NO EXPLODED VIEW
AVAILABLE
FOR THIS BOM

Item	Part No.	Name	Qty	L	SN INFO
-	4812160752	Service kit, 50h			
1	4812112262	Hydraulic oil filter element	1		

Service kits 4812161474 Service kit, 500h

NO EXPLODED VIEW
AVAILABLE
FOR THIS BOM

Item	Part No.	Name	Qty	L	SN INFO
0	4812161474	Service kit, 500h			
1	4700945145	Oil filter element	1		
2	4812317429	Fuel filter	1		
3	4812160783	Fuel/Water separator filter	1		
4	4812126206	Main filter element	1		

Service kits 4812161475 Service kit, 1000h

NO EXPLODED VIEW
AVAILABLE
FOR THIS BOM

Item	Part No.	Name	Qty	L	SN INFO
0	4812161475	Service kit, 1000h			
1	4700945145	Oil filter element	1		
2	4812317429	Fuel filter	1		
3	4812160783	Fuel/Water separator filter	1		
4	4812126206	Main filter element	1		
5	4812126207	Safety filter element	1		
6	4812112262	Hydraulic oil filter element	1		
7	4700357138	Ventilating filter	1		

Service kits 4812161476 Service kit, 2000h

NO EXPLODED VIEW
AVAILABLE
FOR THIS BOM

Item	Part No.	Name	Qty	L	SN INFO
0	4812161476	Service kit, 2000h			
1	4700945145	Oil filter element	1		
2	4812317429	Fuel filter	1		
3	4812160783	Fuel/Water separator filter	1		
4	4812126206	Main filter element	1		
5	4812126207	Safety filter element	1		
6	4812112262	Hydraulic oil filter element	1		
7	4700357138	Ventilating filter	1		
8	4812160954	Suction filter (Urea)	1		

Repair kits 4700945903 Eccentric shaft kit

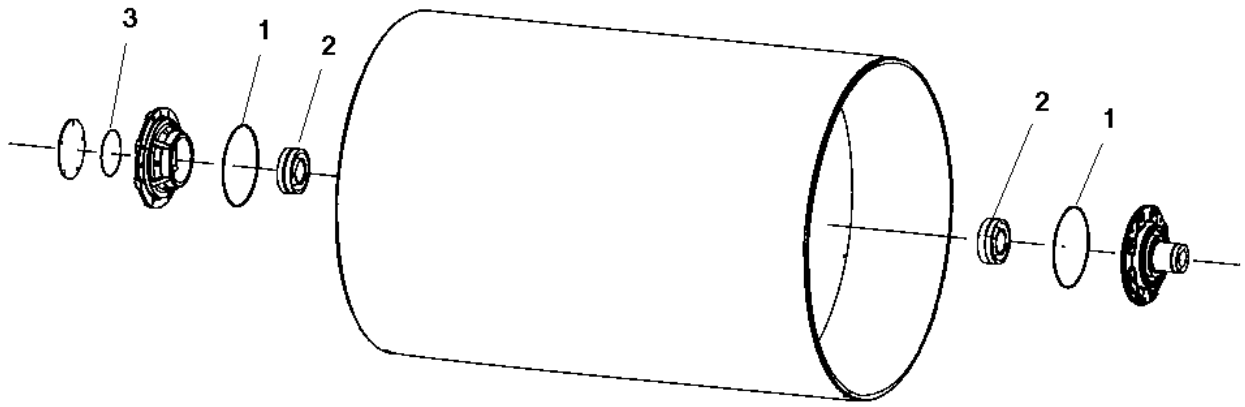

Item	Part No.	Name	Qty	L	SN INFO
0	4700945903	Eccentric shaft kit			
1	4700160344	O-ring 70	2		
2	4700792270	Spherical roller bearing	2		
3	4700160045	O-ring 70	1		

Repair kits 4700938891 Drum rotation kit

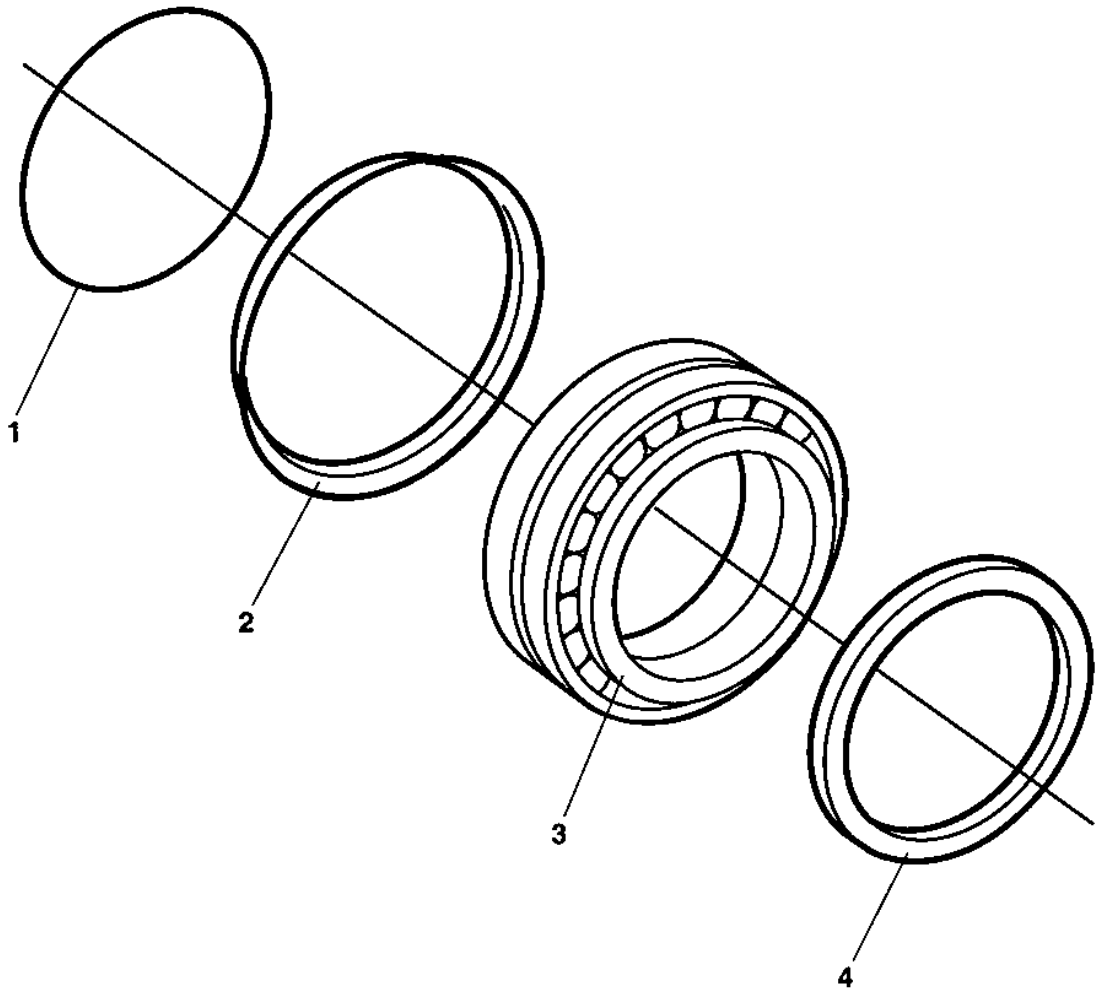

Item	Part No.	Name	Qty	L	SN INFO
0	4700938891	Drum rotation kit			
1	4700160105	O-ring 70	1		
2	4700929447	V-ring	1		
3	4700116041	Taper roller bearing	1		
4	4700386272	Sealing	1		

Repair kits 4812161597 Shock absorber kit, drum

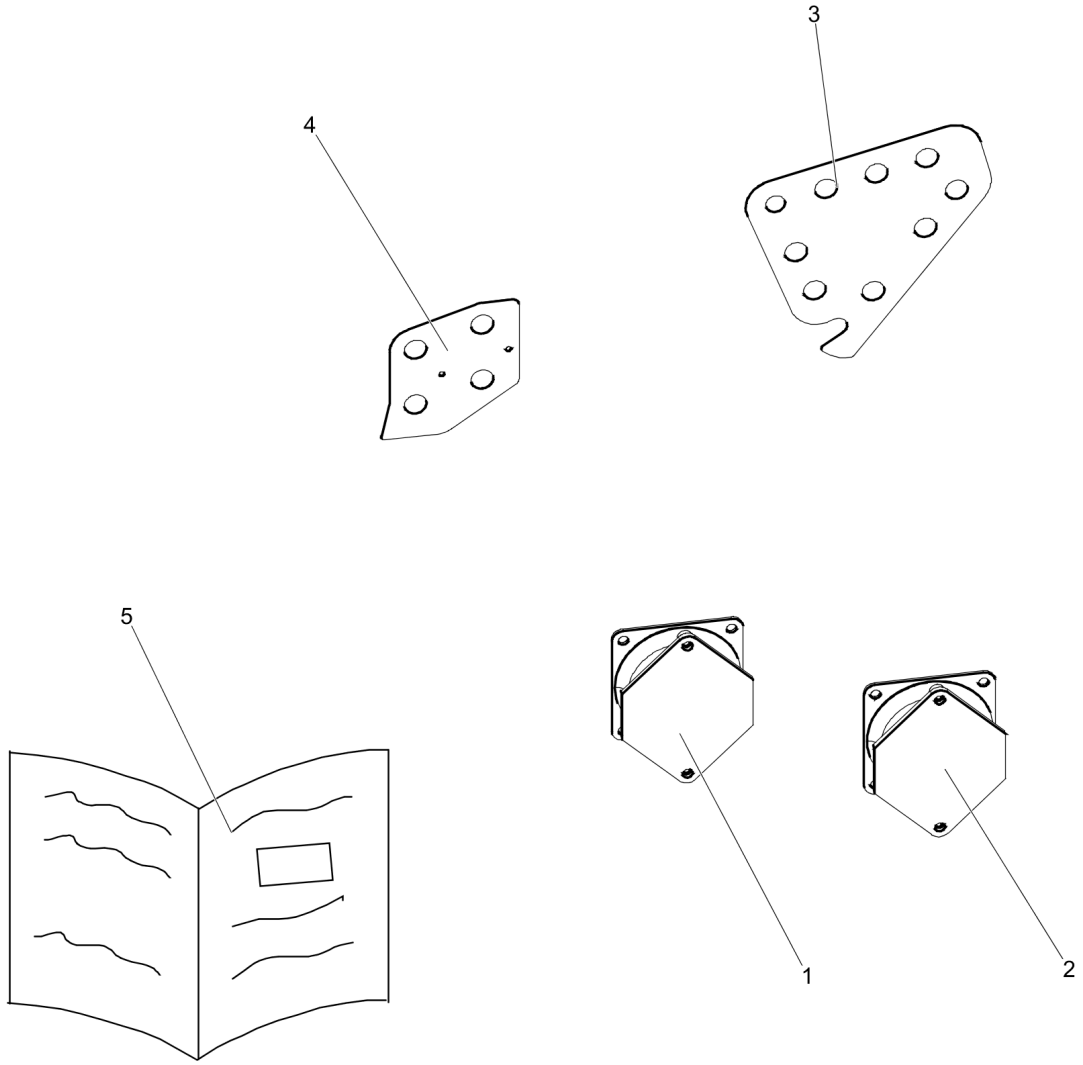

Item	Part No.	Name	Qty	L	SN INFO
0	4812161597	Shock absorber kit, drum			
1	4700394250	Shock absorber	8		
2	4812126045	Shock absorber	4		
3	4812124133	Shim, t = 1mm	4		
4	4812123449	Shim, t = 1mm	4		
5	4812156170	Instructions	1		

Repair kits 4812161595 Scraper blade kit

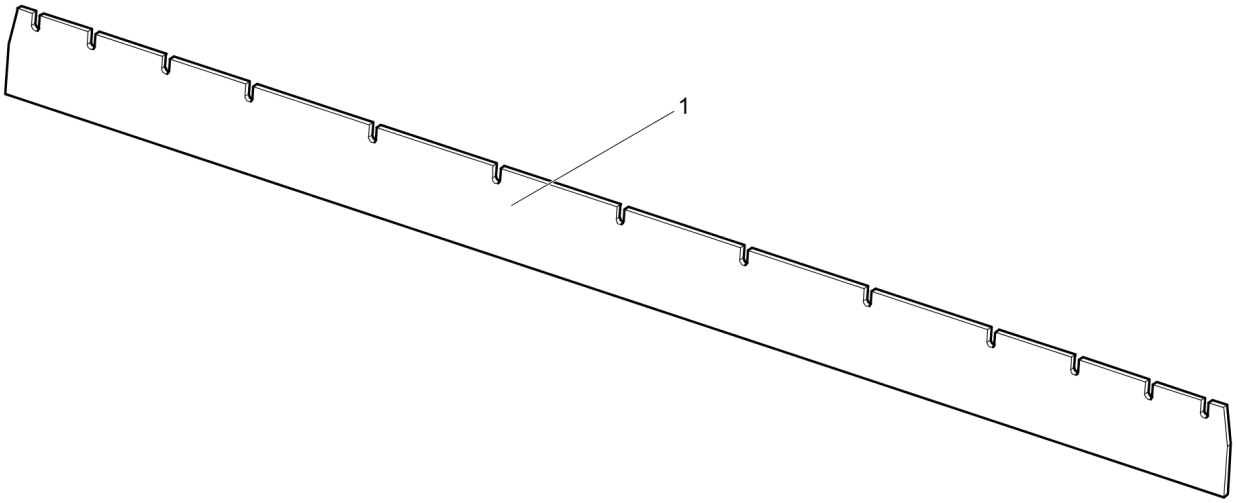

Item	Part No.	Name	Qty	L	SN INFO
0	4812161595	Scraper blade kit			
1	4812123497	Scraper blade	4		

Frame Frame and hitch

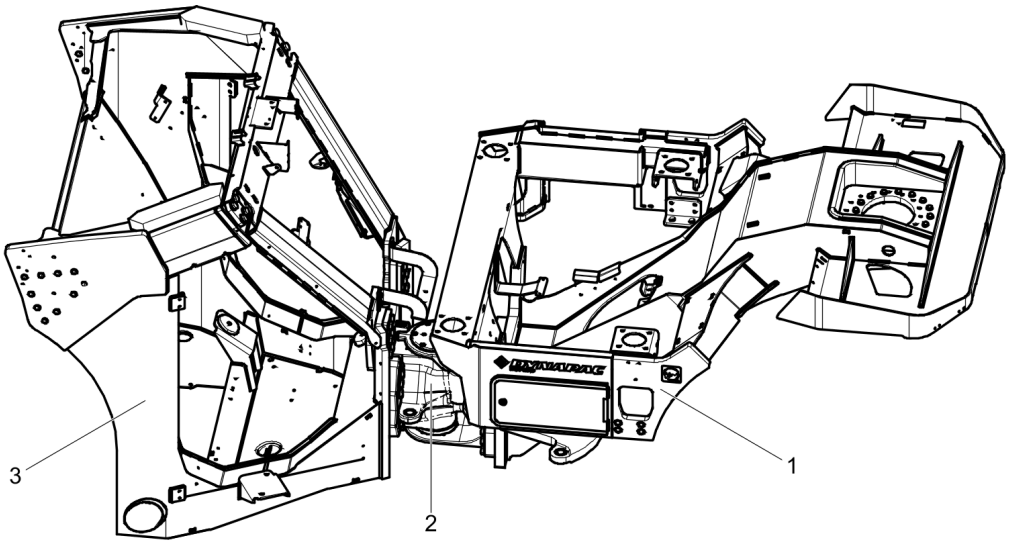

Item	Part No.	Name	Qty	L	SN INFO
1		Front frame module, offset			
2		Hitch module			
3		Rear frame module			

Frame Front frame module, offset

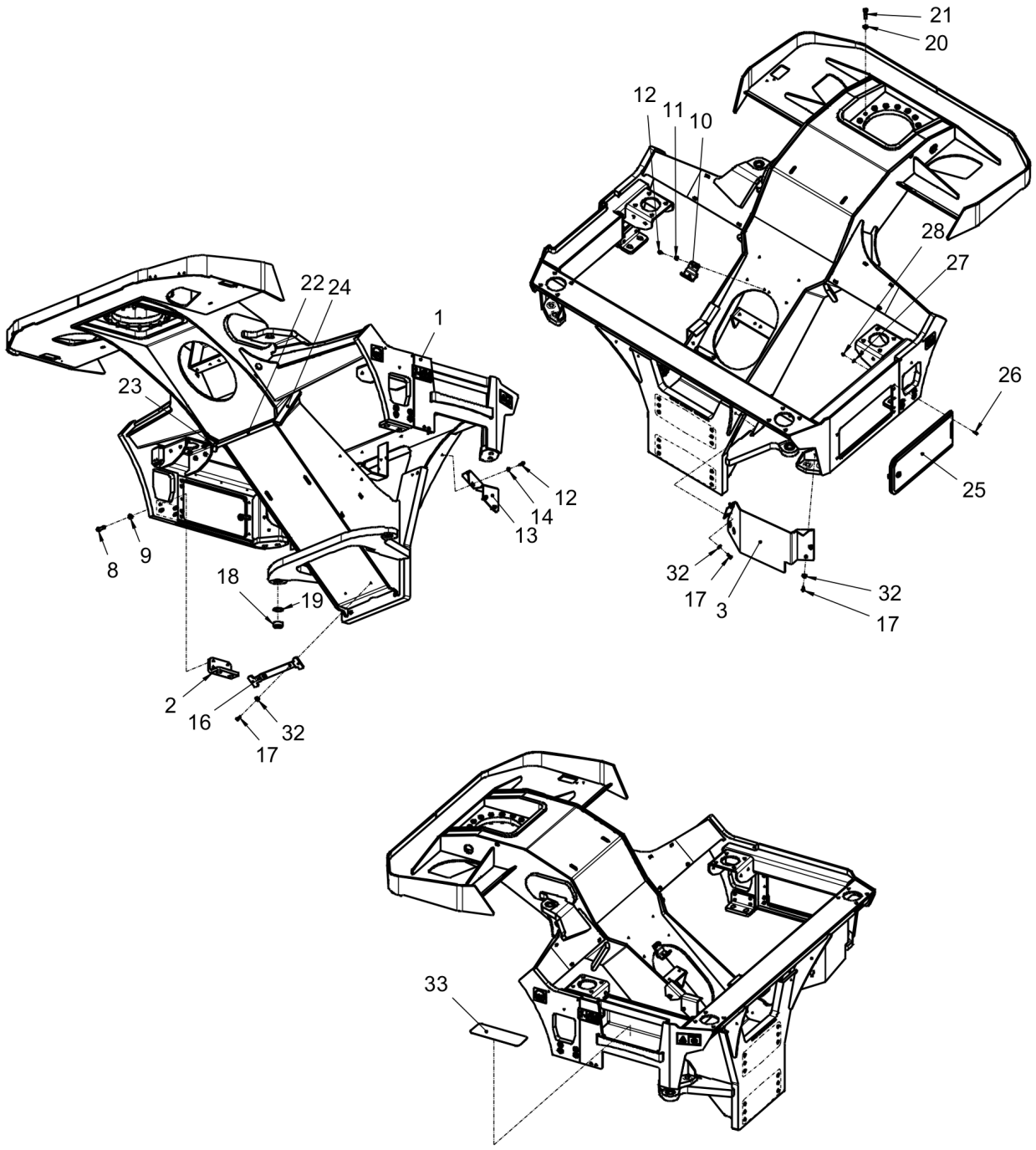

Item	Part No.	Name	Qty	L	SN INFO
1		Front frame	1		
2	4812123914	Bracket	2		
3	4812125355	Cover	1		
8	4700947689	Hex. head screw M12	8		
9	4700904703	Plain washer 13x24x4 mm	8		
10	4812125058	Holder	1		
11	4700904556	Steel plain washer 8,4x16x3,0	2		
12	4700500021	Screw, M8x25 mm 8.8 A2K	5		
13	4812125042	Bracket	1		
14	4700904229	Washer, 8.4x 6x1.5 mm 300HV	3		
16	4812123895	Bracket	1		
17	4700500053	Screw, M8x20 mm 8.8 A2K	6		
18	4700792554	Radial spherical plain bearing	3		
19	4700151015	Snap ring	3		
20	4700904231	Washer, 13x24x2 mm 300 HV	16		
21	4700500269	Screw	16		
22	4700792796	Rubber strip 25x20	0,45		
23	4700792796	Rubber strip 25x20	0,217		
24	4700792796	Rubber strip 25x20	0,217		
25		Cover assy	1		
26	4700928784	Screw	4		
27	4700603001	Washer	4		
28	4700586002	Lock nut M6 -8	4		
32	4700904640	Washer, 8.4x22x3 mm 300HV	6		
33	4812127080	Slip protection	1		

Frame Cover assembly

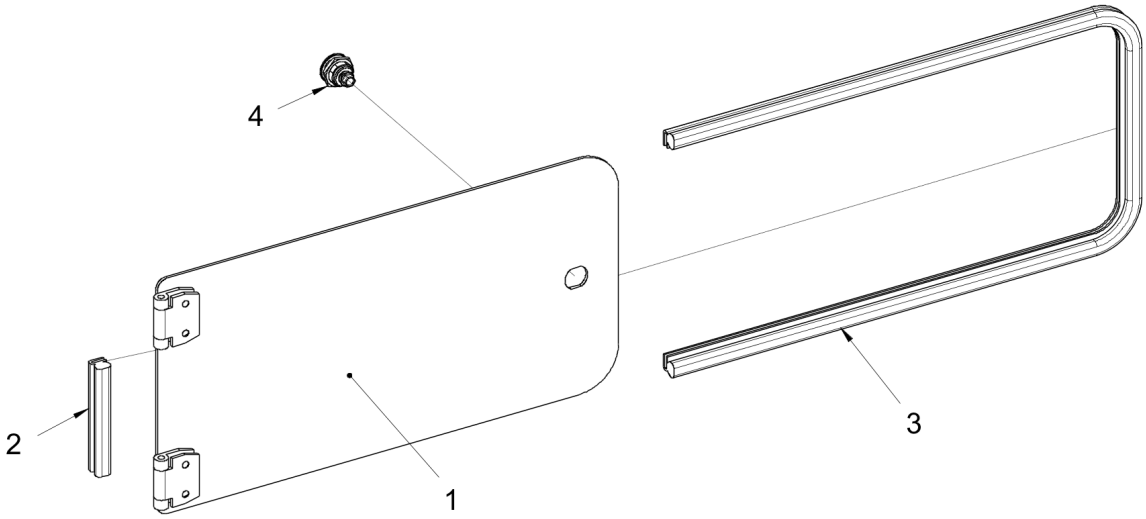

Item	Part No.	Name	Qty	L	SN INFO
1	4812125238	Cover	1		
2	4700202057	Rubber edge trim	0,11		
3	4700202057	Rubber edge trim	1,14		
4	4812124686	Lock	1		
4	4700902866	Key Marked "455"	1		

Frame Drum cover module

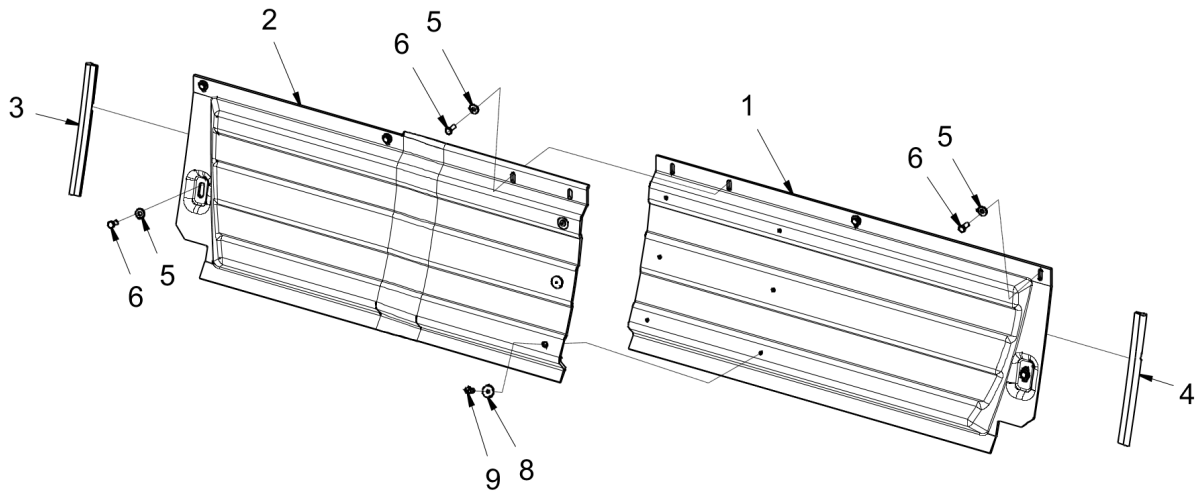

Item	Part No.	Name	Qty	L	SN INFO
1	4812124335	Drum cover	1		
2	4812124334	Drum cover	1		
3	4700902166	Edge trim	0,28		
4	4700902166	Edge trim	0,28		
5	4700601003	Washer, 8,4x25x2 mm	7		
6	4700500053	Screw, M8x20 mm 8.8 A2K	7		
8	4700615065	Steel plain washer	6		
9	4700791666	Blind rivet	3		

Frame Hitch module

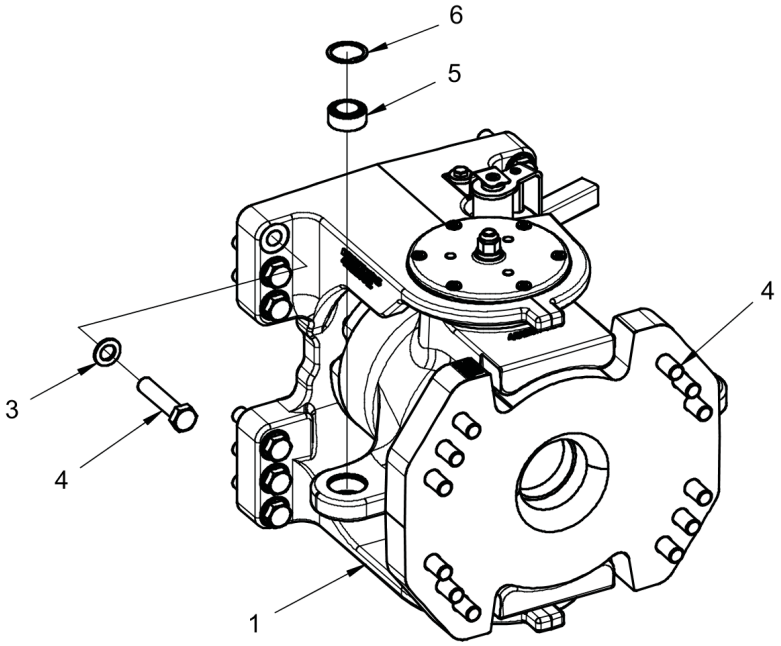

Item	Part No.	Name	Qty	L	SN INFO
1	4812117737	Steering hitch	1		
2	4700500287	Screw M20x80 10,9	12		
3	4700904233	Steel plain washer 21x36x3	24		
4	4700925208	Screw M20x90	12		
5	4700792554	Radial spherical plain bearing	1		
6	4700151015	Snap ring	1		

Frame 4812117737 Articulated joint

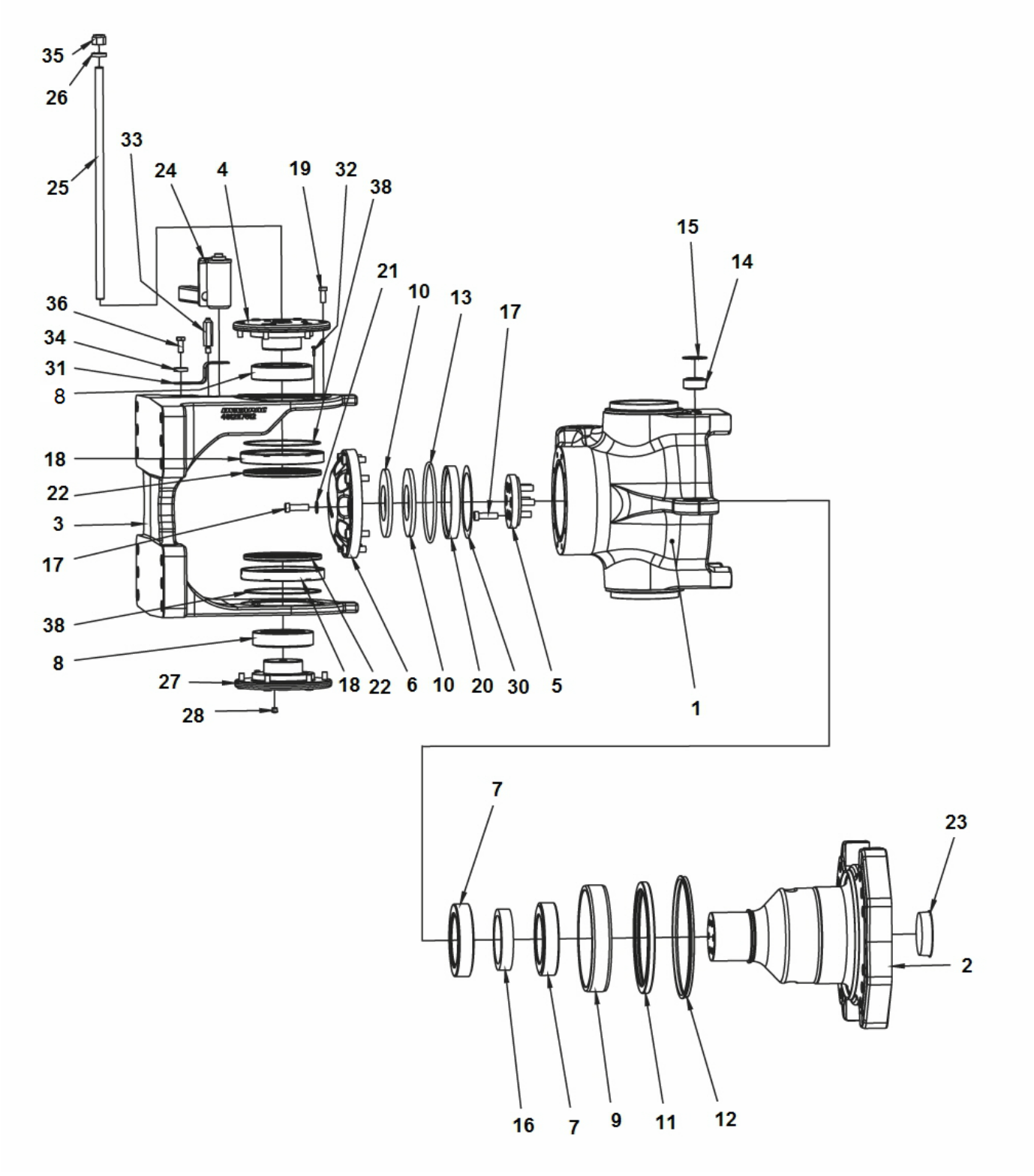

Item	Part No.	Name	Qty	L	SN INFO
1	4812117738	Yoke	1		
2	4812115392	Shaft	1		
3	4812117512	Holder	1		
4	4812121396	Shaft	1		
5	4812115949	Cover cup	1		
6	4812115950	Cover cap	1		
7	4812116334	Spherical plain bearing	2		
8	4812115467	Spherical plain bearing	2		
9	4812115398	Bushing	1		
10	4812116333	Disc spring	2		
11	4700391031	Radial lip-type seal	1		
12	4700792515	Sealing, v-ring	1		
13	4700160296	O-ring 70	1		
14	4700792554	Radial spherical plain bearing	1		
15	4700151015	Snap ring	1		
16	4812116340	Spacer washer	1		
17	4700792394	Screw	16		
18	4812121398	Radial seal	2		
19	4812120414	Hexagon socket head cap screw w Tuflok	12		
20	4812115947	Washer	1		
21	4700904231	Washer, 13x24x2 mm 300 HV	10		
22	4812120615	Radial lip-type seal	2		
23	4812116702	Protective plug	1		
24	4812119809	Locking pin cpl	1		
25	4812120618	Threaded stud	1		
26	4700904558	Washer, 17x30x6 mm 300 HV	1		
27	4812121397	Shaft	1		
28	4700792083	Plug	6		
30	4812117530	Shim washer	1		
31	4812121665	Stop plate	1		
32	4812121282	Thread forming screw m	8		
33	4812119807	Holder	1		
34	4700904567	Washer, 10.5x28x6 mm	1		
35	291112842	Prev torq hex nut m	1		
36	4700500028	Hex Head screw	1		
37	4700902541	Lock fluid Loctite 243, 50 ml	0		
38	4812121111	O-ring	2		

Frame Rear frame module

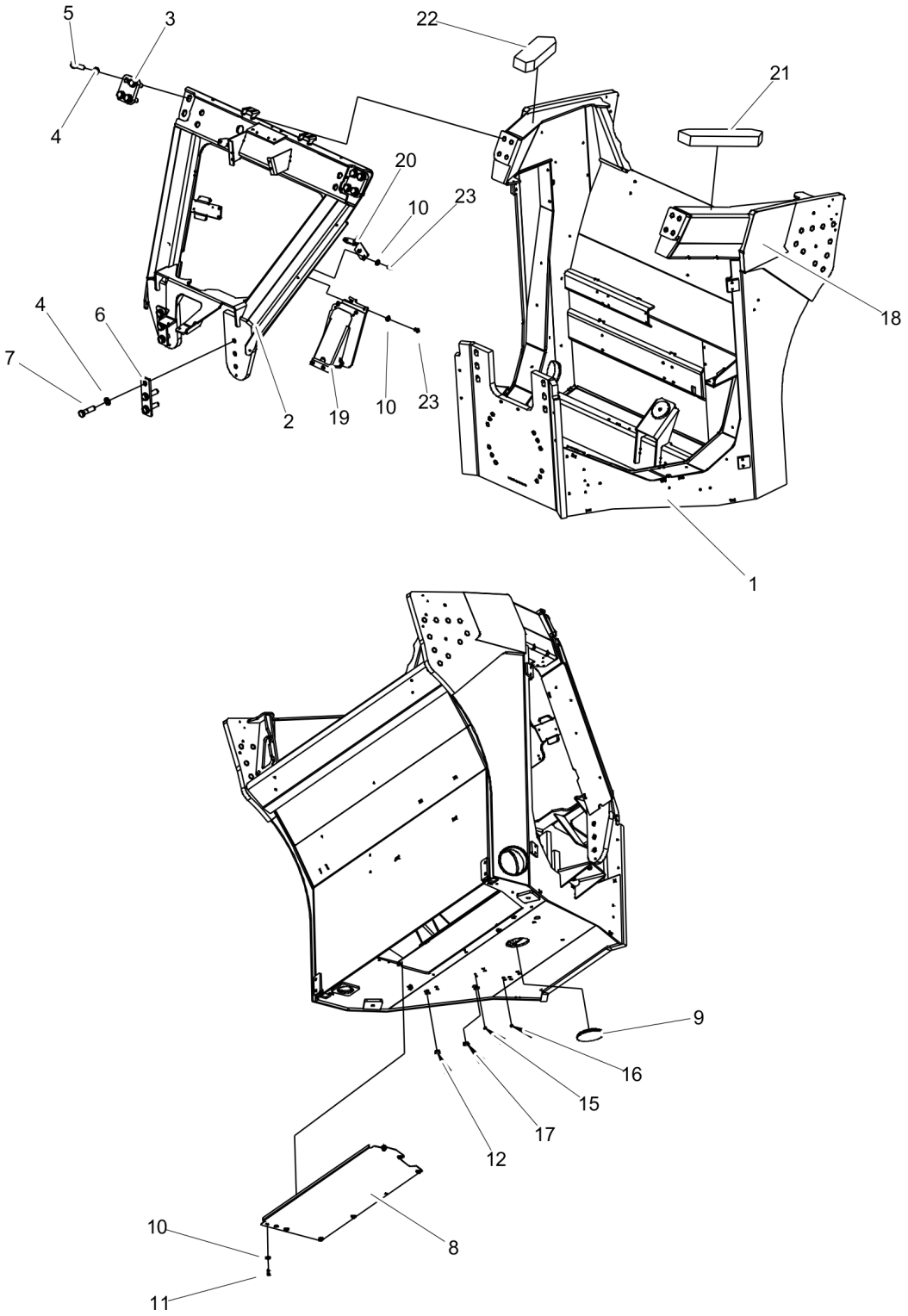

Item	Part No.	Name	Qty	L	SN INFO
1		Rear frame welded	1		
2		Top frame	1		
3	4812123195	Spacer washer	2		
4	4700904233	Steel plain washer 21x36x3	14		
5	4700929409	Hexagon head screw	8		
6	4812123197	Spacer washer	2		
7	4700500284	Screw	6		
8	4812124177	Cover	1		
9	4700379992	Plug	1		
10	4700904640	Washer, 8.4x22x3 mm 300HV	14		
11	4700500019	Hexagon screw	8		
12	4700904225	Plug	2		
15	4700926215	Protective plug	4		
16	4700902919	Plug	4		
17	4700923270	Protective plug	1		
18	4812125906	Decal cosmetic, yellow	1		
19	4812125644	Holder	1		
20	4812127209	Bracket	1		
21	4812126098	Cellular rubber strip	1		
22	4812126098	Cellular rubber strip	1		
23	4700500053	Screw, M8x20 mm 8.8 A2K	6		

Frame Front ending module, offset

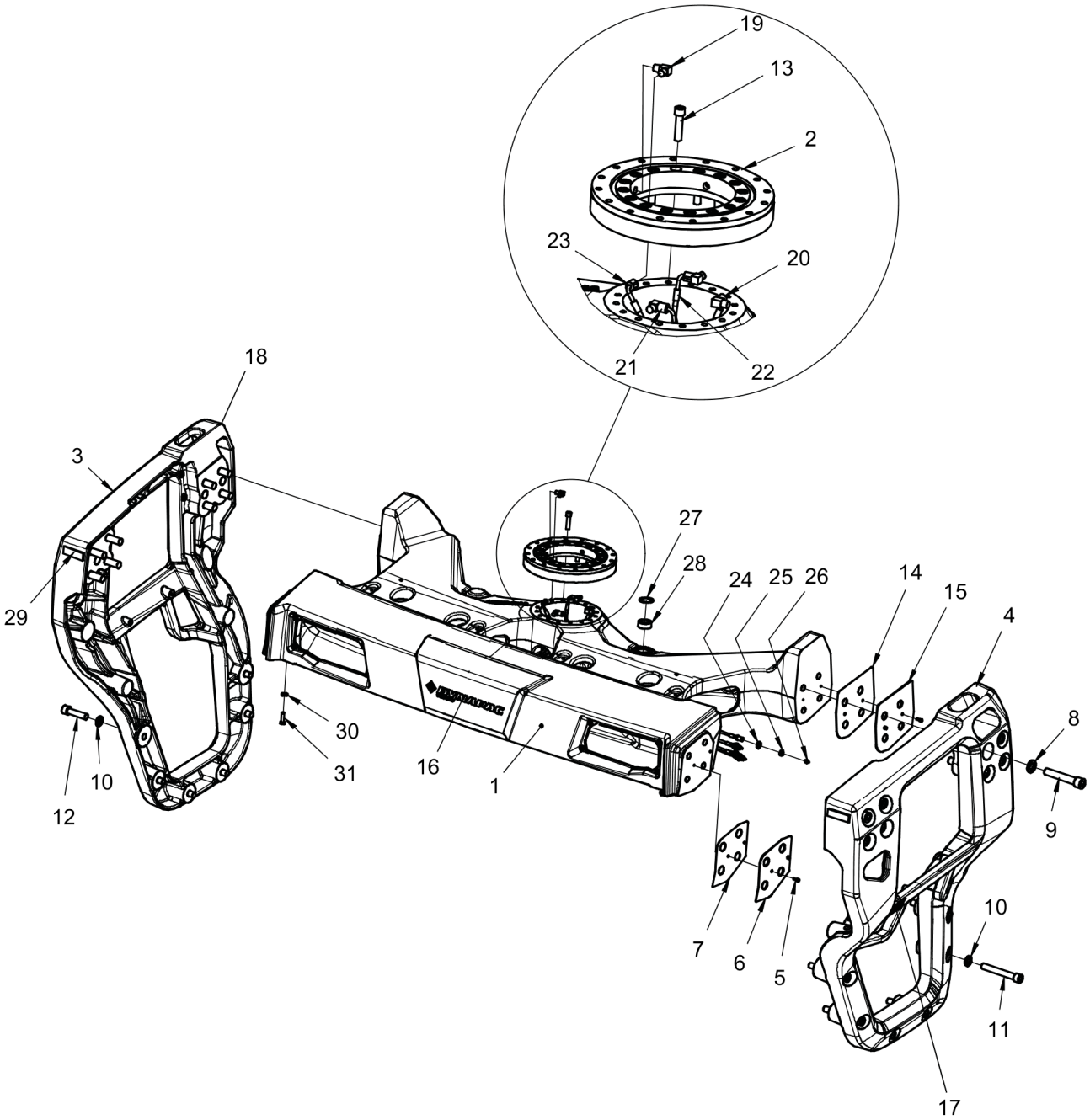

Item	Part No.	Name	Qty	L	SN INFO
1	4812124566	Yoke	1		
2	4812124207	Slewing bearing	1		
3	4812124549	Fork	1		
4	4812124547	Fork	1		
5	4700508002	Cylinder screw	8		
6	4812123452	Shim, t = 3mm	0		
7	4812123449	Shim, t = 1mm	0		
8	4700904234	Steel plain washer	16		
9	0211110355	Hexagon head screw	16		
10	4700904233	Steel plain washer 21x36x3	12		
11	0211110321	Hexagon head screw	6		
12	0211110375	Hexagon head screw	6		
13	4700904386	Hexagon head cap screw	16		
14	4812125049	Shim	N		
15	4812125050	Shim	N		
16	4812127714	Decal "FAYAT DYNAPAC", 350-WH	1		
17	4700382751	Decal "SECURING POINT/TIE DOWN"	2		
18	4700357587	Label lifting point	2		
19	4700373183	Elbow 90°	4		
20	4700393360	Hydraulic hose	1		
21	4700393360	Hydraulic hose	1		
22	4700393360	Hydraulic hose	1		
23	4700393360	Hydraulic hose	1		
24	4700904231	Washer, 13x24x2 mm 300 HV	4		
25	4700903831	Hexagon nut	4		
26	4700926214	Grease fitting	4		
27	4700151015	Snap ring	2		
28	4700792554	Radial spherical plain bearing	1		
29	4700377743	Reflector, white	2		
30	4700904557	Washer, 10.5x22x4 mm 300 HV	4		
31	4700500030	Hexagon head screw	4		

Frame Cover plates, front ending

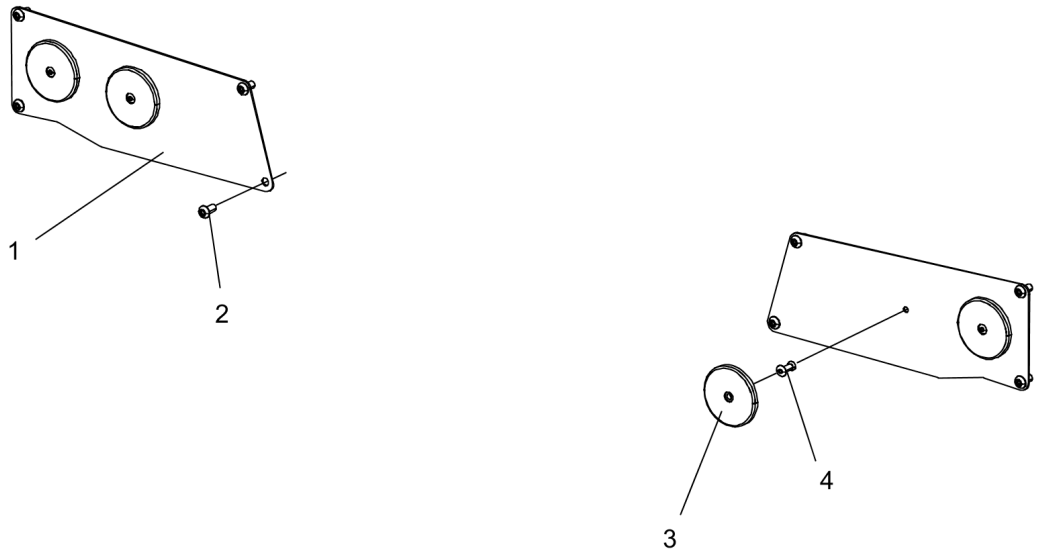

Item	Part No.	Name	Qty	L	SN INFO
1	4812125261	Cover plate	2		
2	4700904956	Screw	8		
3	4700791957	Reflector, white	4		
4	4700791666	Blind rivet	4		

Frame Step and handle, front right

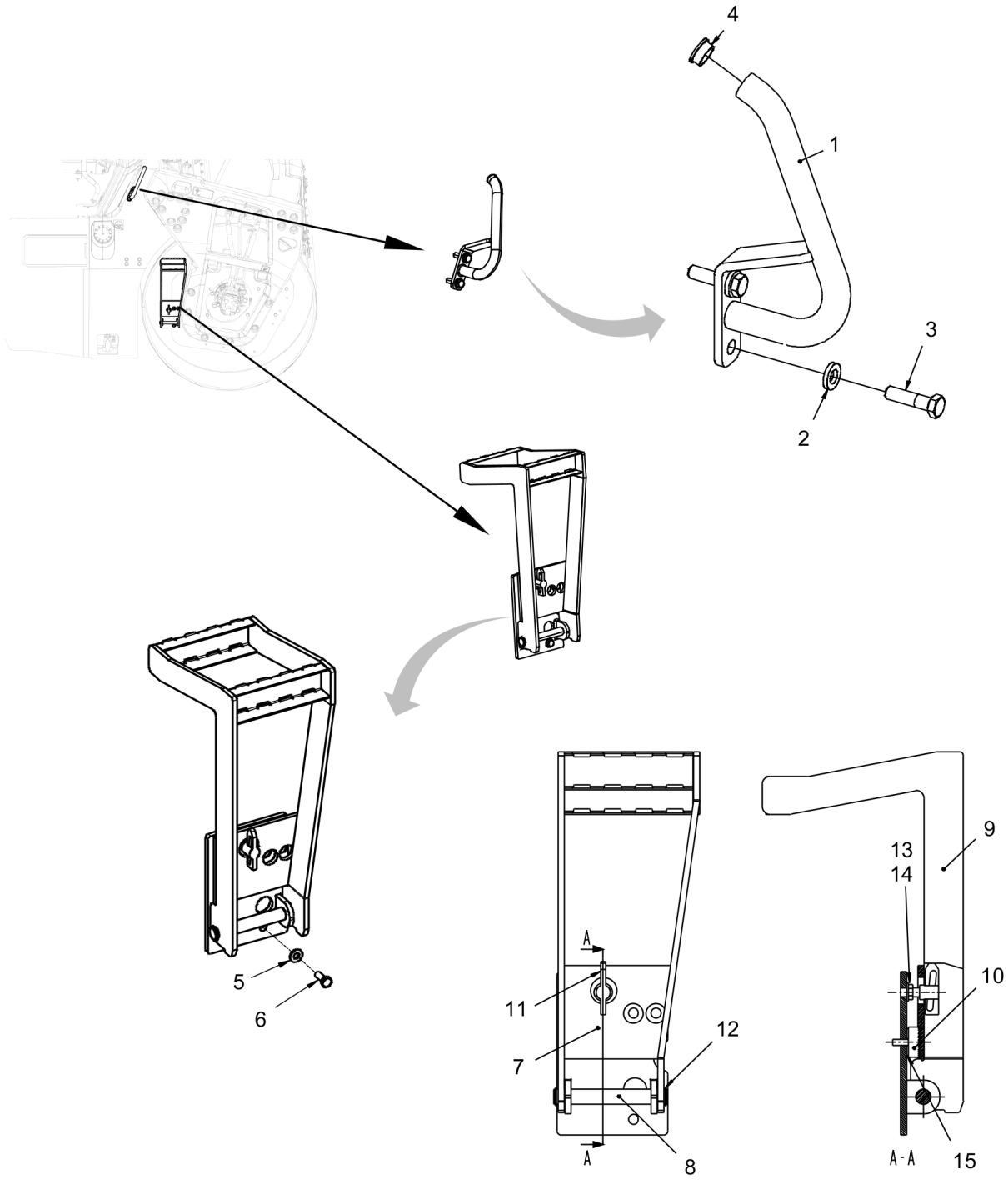

Item	Part No.	Name	Qty	L	SN INFO
1	4812125371	Handle	1		
2	4700904703	Plain washer 13x24x4 mm	2		
3	4700500056	Screw, M12x45 mm 8.8 A3K	2		
4	4700904225	Plug	1		
5	4700904230	Steel plain washer	3		
6	4700500028	Hex Head screw	3		
7	4812124948	Bracket	1		
8	4812124975	Shaft	1		
9	4812125401	Step	1		
10	4700792601	Shock absorber	1		
11	4700475064	Lock	1		
12	4700150008	Circlip	2		
13	4700904231	Washer, 13x24x2 mm 300 HV	1		
14	4700927233	Nut	1		
15	4700615050	Washer	1		

Frame Rear ending module

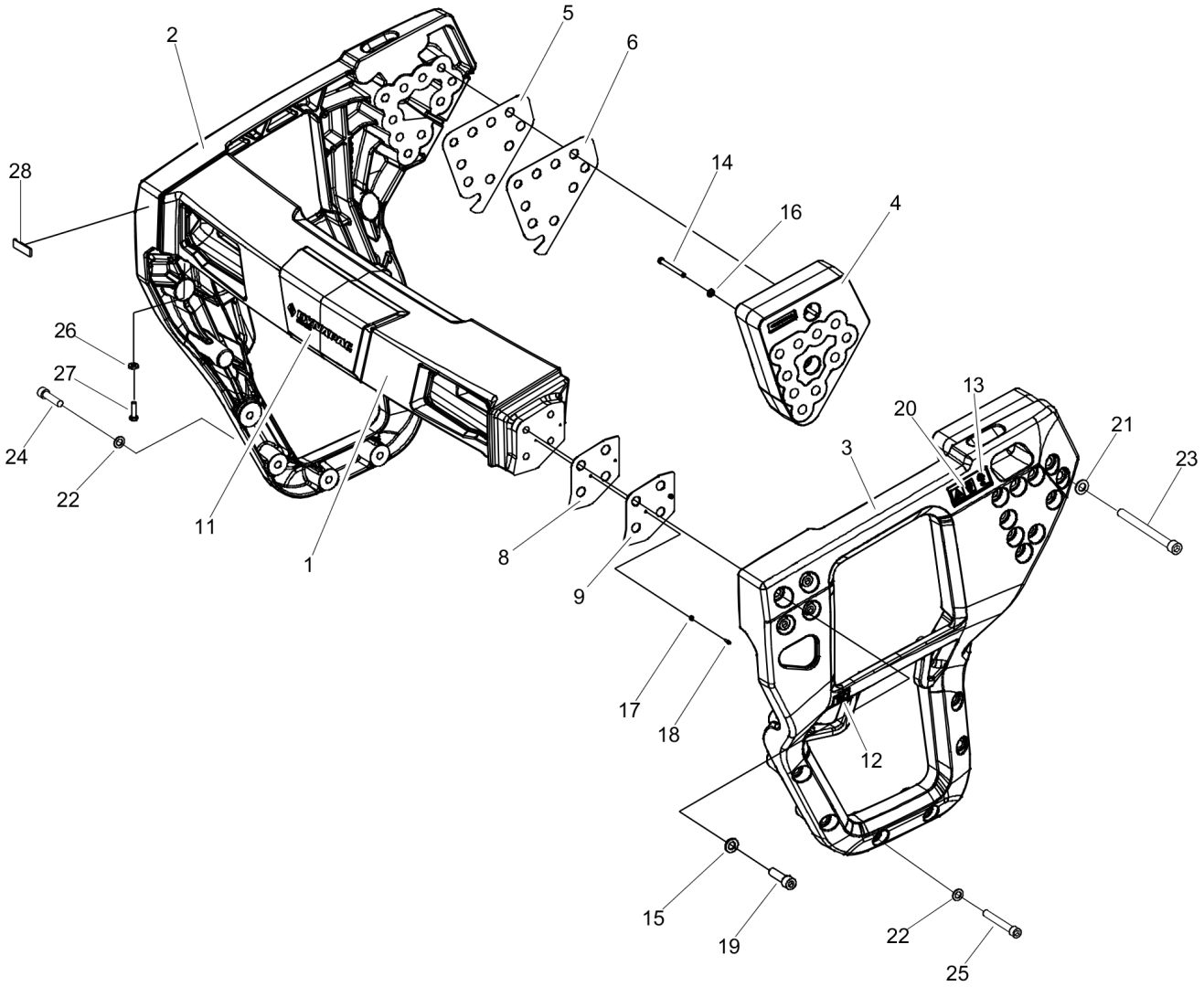

Item	Part No.	Name	Qty	L	SN INFO
1	4812123481	Crossbeam	1		
2	4812123418	Fork	1		
3	4812123416	Fork	1		
4	4812123803	Spacer	2		
5	4812124133	Shim, t = 1mm	N		
6	4812124219	Shim, t = 3mm	N		
8	4812123449	Shim, t = 1mm	N		
9	4812123452	Shim, t = 3mm	N		
11	4812127714	Decal "FAYAT DYNAPAC", 350-WH	1		
12	4700382751	Decal "SECURING POINT/TIE DOWN"	2		
13	4700357587	Label lifting point	2		
14	4700500267	Screw M12x120 8,8 FZB	4		
15	4700904234	Steel plain washer	8		
16	4700904231	Washer, 13x24x2 mm 300 HV	4		
17	4700904228	Washer 6,4x12x1,5	4		
18	4700508002	Cylinder screw	4		
19	0211110351	Hexagon head screw	8		
20	4700908229	Safety decal	1		
21	4700904234	Steel plain washer	20		
22	4700904233	Steel plain washer 21x36x3	12		
23	4812126100	Hexagon head screw	20		
24	0211110375	Hexagon head screw	6		
25	0211110321	Hexagon head screw	6		
26	4700904557	Washer, 10.5x22x4 mm 300 HV	4		
27	4700500030	Hexagon head screw	4		
28	4700377742	Reflector, red	2		

Frame Cover plates, rear ending

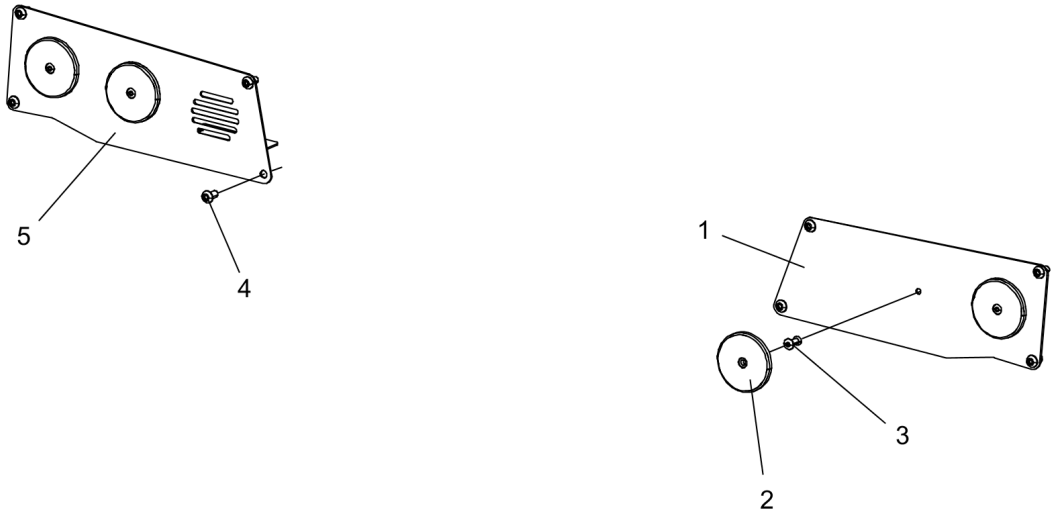

Item	Part No.	Name	Qty	L	SN INFO
1	4812125261	Cover plate	1		
2	4700791956	Reflector, red	4		
3	4700791666	Blind rivet	4		
4	4700904956	Screw	8		
5	4812126593	Cover plate	1		

Frame Scrapers

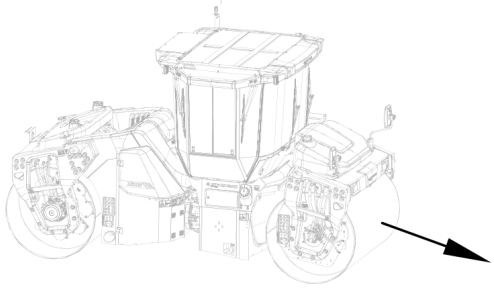

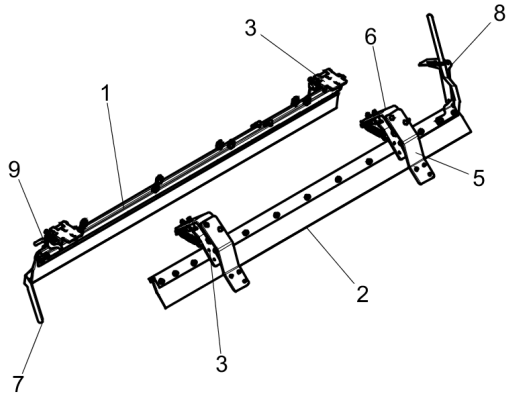

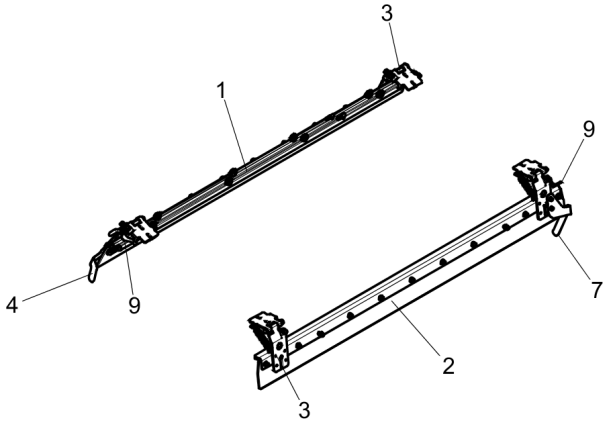

Item	Part No.	Name	Qty	L	SN INFO
1		Scraper module with nozzles	2		
2		Scraper module	2		
3	4700394340	Scraper bracket, cpl	8		
4		Grab handle, lift	1		
5		Bracket module	2		
6		Bracket module	2		
7		Grab handle, lift	2		
8		Grab handle module	1		
9		Grab handle, release	4		

Frame Scraper module

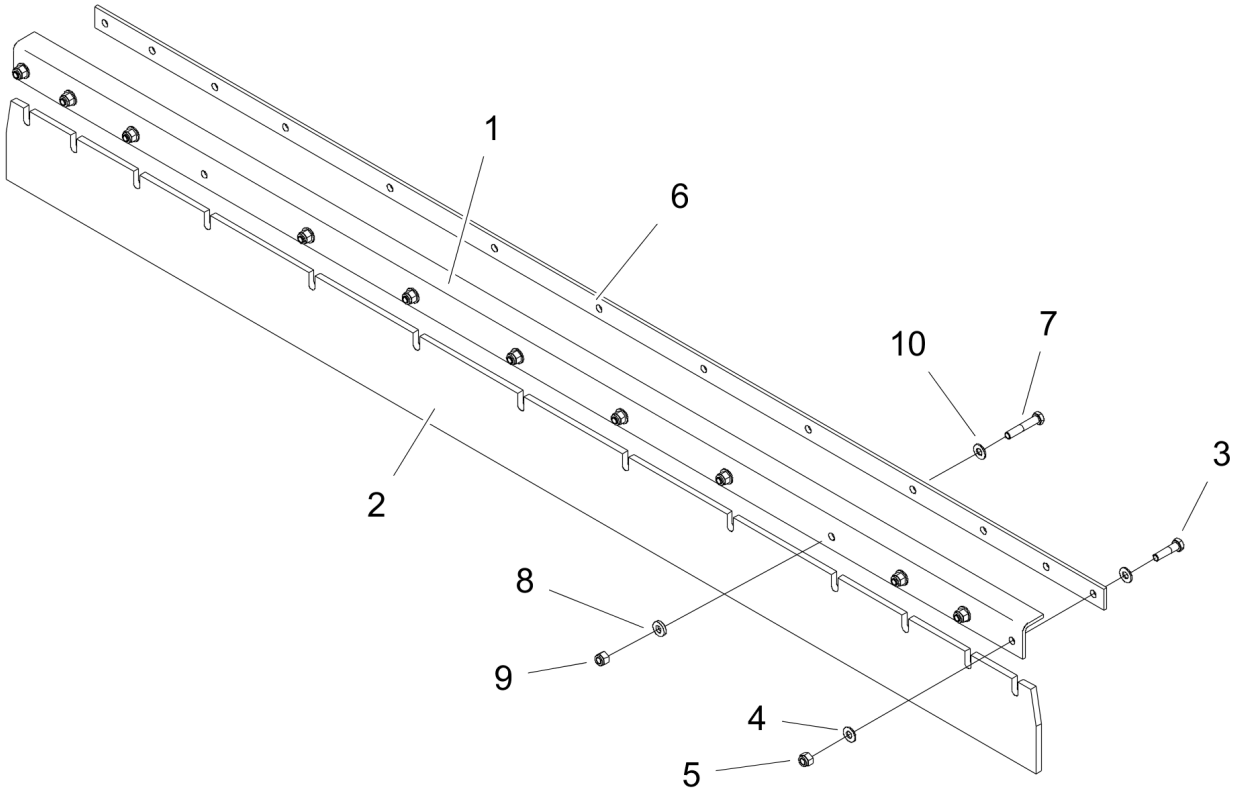

Item	Part No.	Name	Qty	L	SN INFO
1	4812126191	Scraper bracket	1		
2	4812123497	Scraper blade	1		
3	4700500031	Screw M10x40	11		
4	4700904230	Steel plain washer	22		
5	4700586018	Lock nut M10	11		
6	4812126192	Scraper bracket	1		
7	4700500032	Screw M10 x 55	2		
8	4700904557	Washer, 10.5x22x4 mm 300 HV	2		
9	4700586018	Lock nut M10	2		
10	4700904230	Steel plain washer	2		

Frame 4700394340 Scraper bracket, cpl

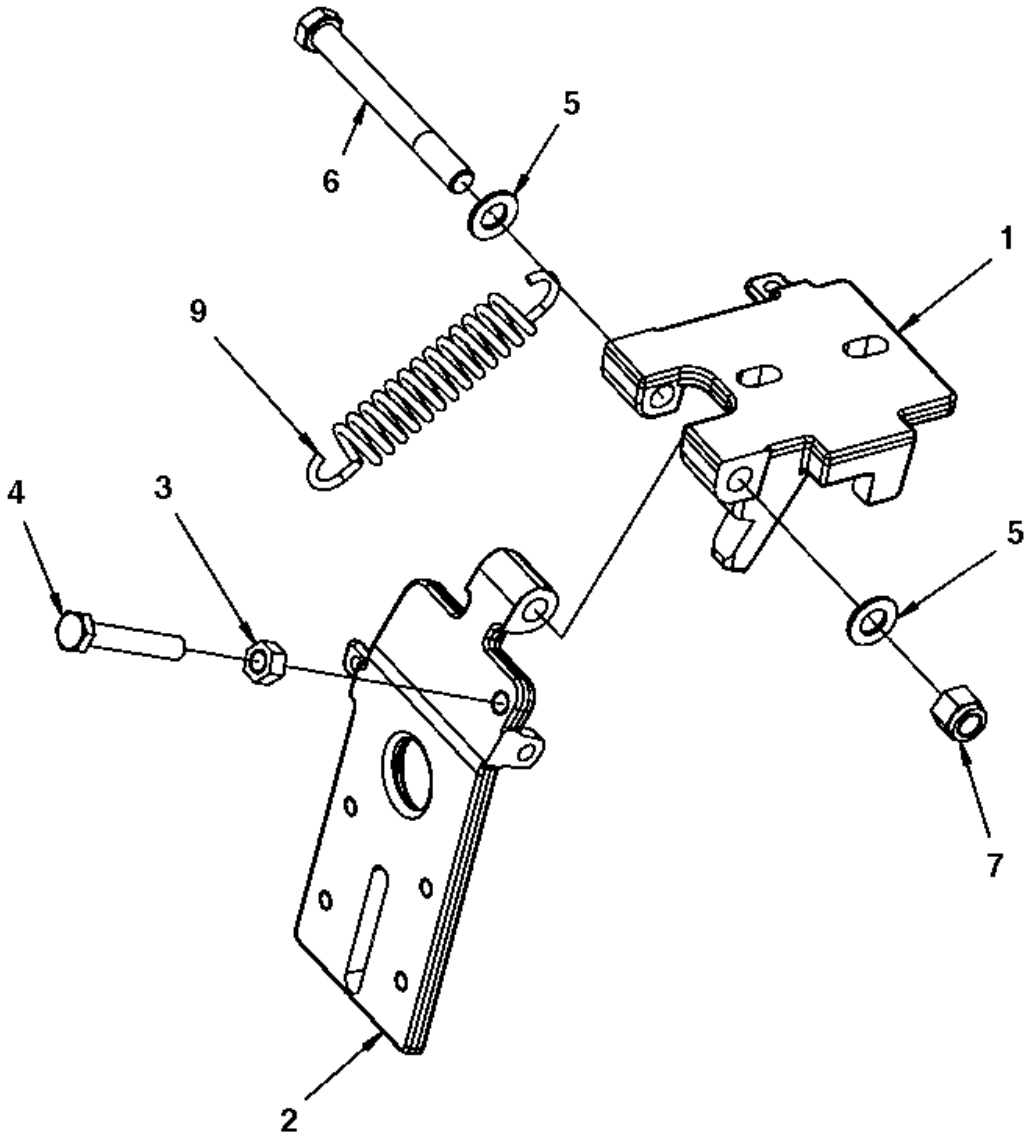

Item	Part No.	Name	Qty	L	SN INFO
1	-	Scraper bracket	1		
2	-	Scraper bracket	1		
3	4700570006	Hexagon nut	1		
4	4700500105	Hex. screw	1		
4	4700791082	Screw	1	1	
5	4700904231	Washer, 13x24x2 mm 300 HV	2		
6	4700500198	Wheel bolt	1		
7	4700586019	Lock nut	1		
9	4700394806	Extension spring	1		

Comments for Page: 4700394340 Scraper bracket, cpl

(L)OCAL REMARKS

1 | en_US | Longer screw on outer scraper when cocoa mat is mounted.

Frame Grab handle, lift

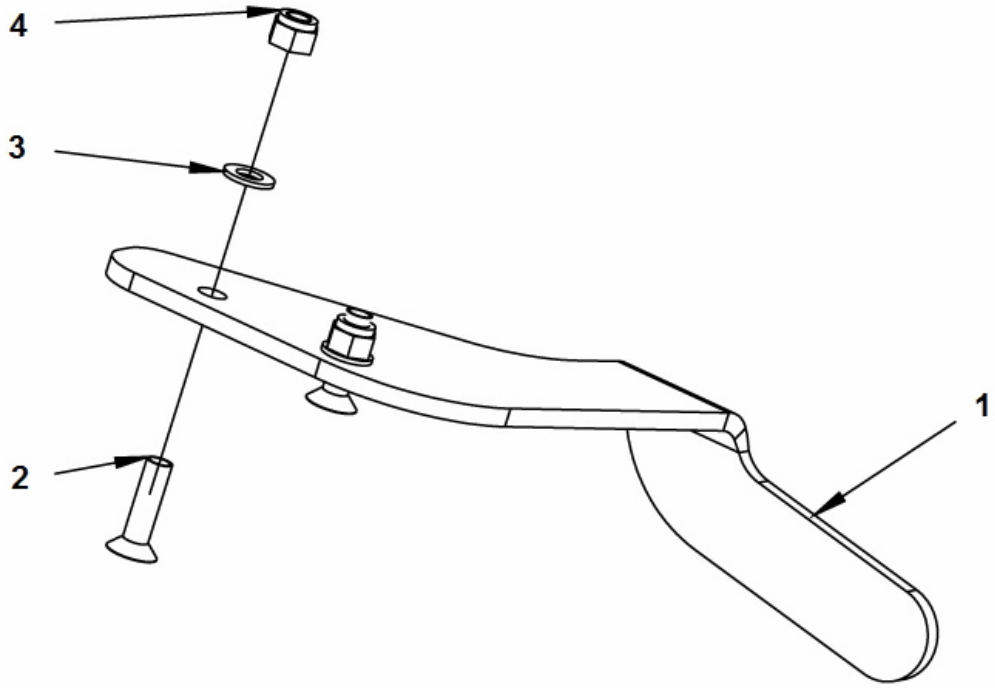

Item	Part No.	Name	Qty	L	SN INFO
1	4812119147	Grab handle	1		
2	4700792540	Screw	2		
3	4700904229	Washer, 8.4x 6x1.5 mm 300HV	2		
4	4700586003	Lock nut M8	2		

Frame Bracket module

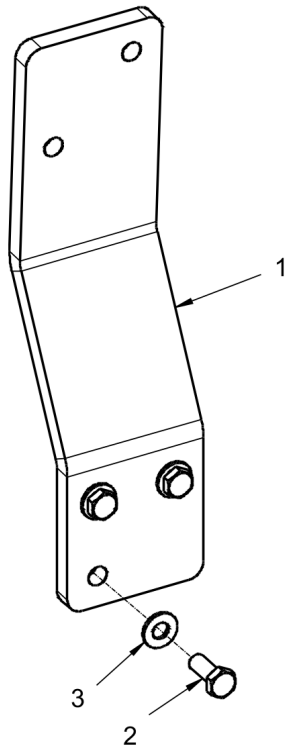

Item	Part No.	Name	Qty	L	SN INFO
1	4812127032	Scraper bracket	1		
2	4700500028	Hex Head screw	3		
3	4700904230	Steel plain washer	3		

Frame Bracket module

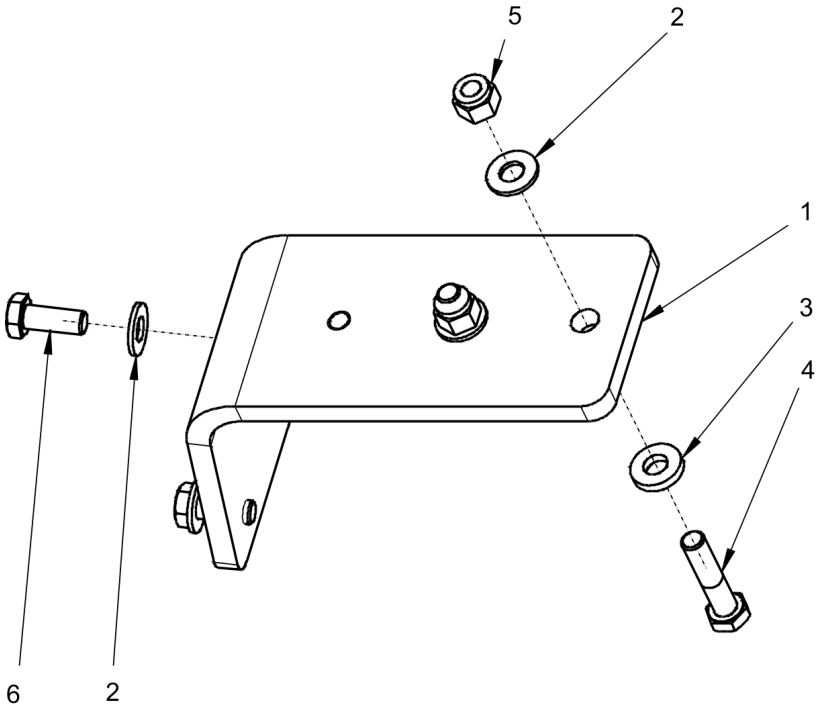

Item	Part No.	Name	Qty	L	SN INFO
1	4812126578	Bracket	1		
2	4700904230	Steel plain washer	4		
3	4700904557	Washer, 10.5x22x4 mm 300 HV	2		
4	4700500161	Screw	2		
5	4700586018	Lock nut M10	2		
6	4700500028	Hex Head screw	2		

Frame Grab handle, lift

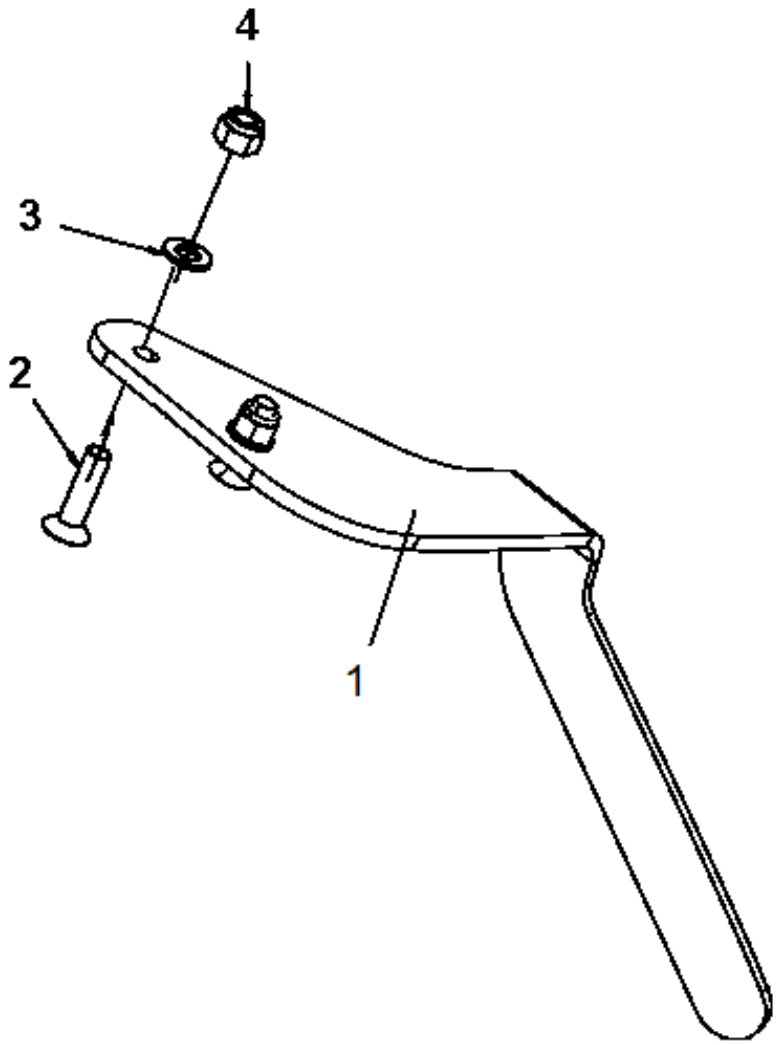

Item	Part No.	Name	Qty	L	SN INFO
1	4812110672	Grab handle	1		
2	4700792540	Screw	2		
3	4700904229	Washer, 8.4x 6x1.5 mm 300HV	2		
4	4700586003	Lock nut M8	2		

Frame Grab handle module

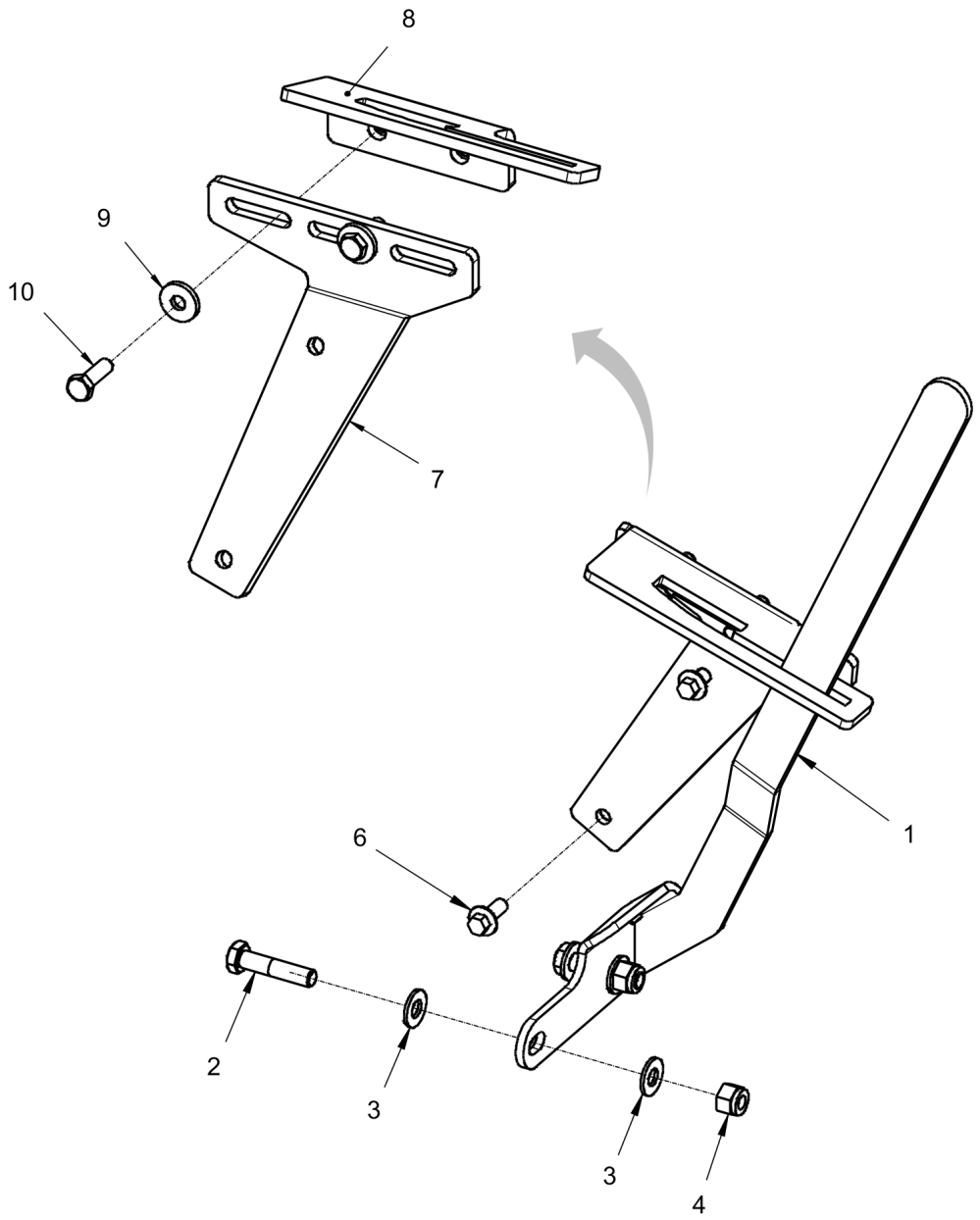

Item	Part No.	Name	Qty	L	SN INFO
1	4812126997	Grab handle	1		
2	4700500161	Screw	2		
3	4700904230	Steel plain washer	4		
4	4700586018	Lock nut M10	2		
6	4700500505	Screw, M8x20 mm 8.8 A2K	2		
7	4812126995	Bracket	1		
8	4812126996	Bracket	1		
9	4700904640	Washer, 8.4x22x3 mm 300HV	2		
10	4700500021	Screw, M8x25 mm 8.8 A2K	2		

Frame Grab handle, release

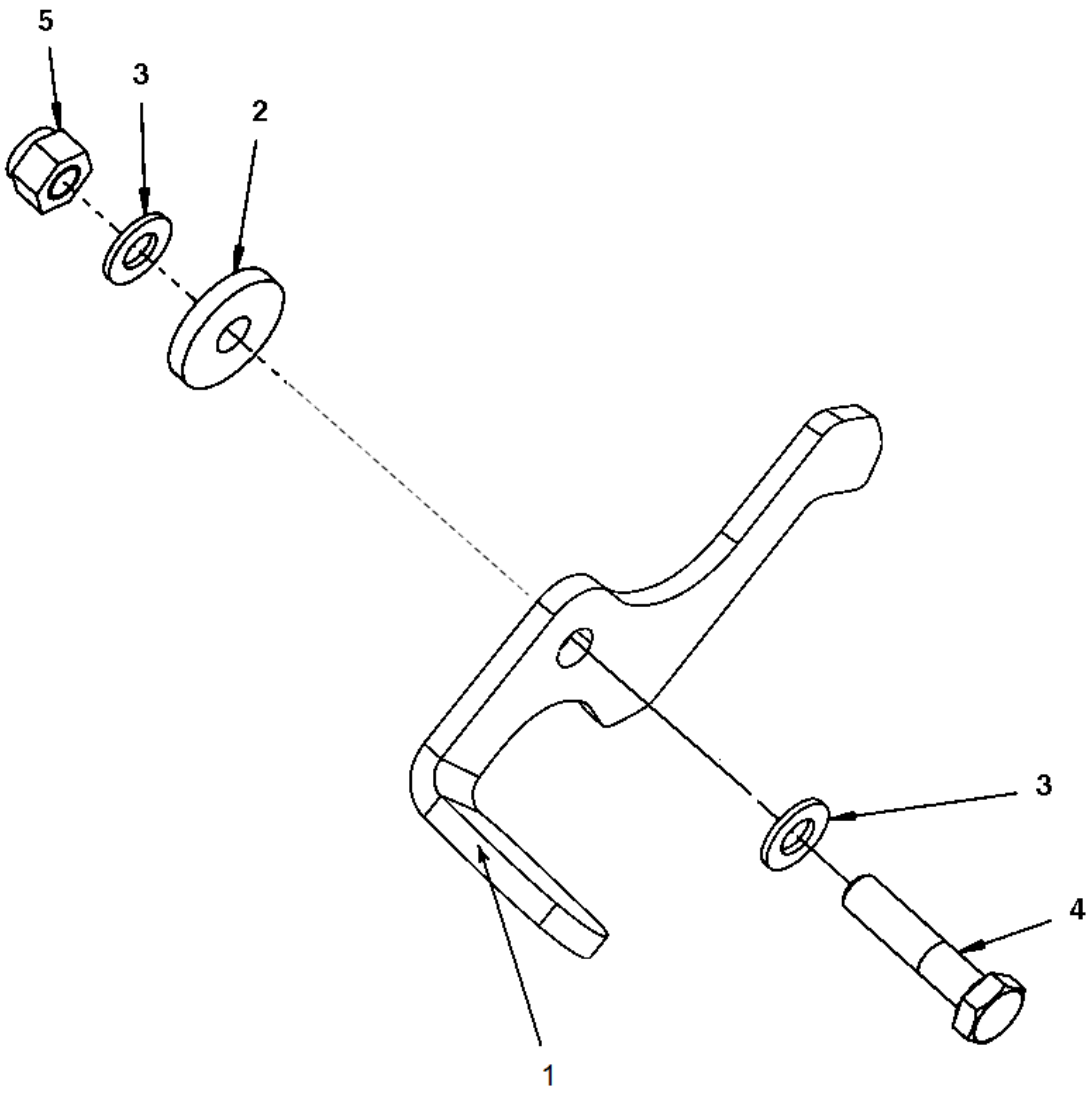

Item	Part No.	Name	Qty	L	SN INFO
1	4812110671	Grab handle	1		
2	4700904734	Washer, 8.4x26x4 mm 300 HV	1		
3	4700904229	Washer, 8.4x 6x1.5 mm 300HV	2		
4	4700500047	Hexagon head screw	1		
5	4700586003	Lock nut M8	1		

Frame Sprinkler system

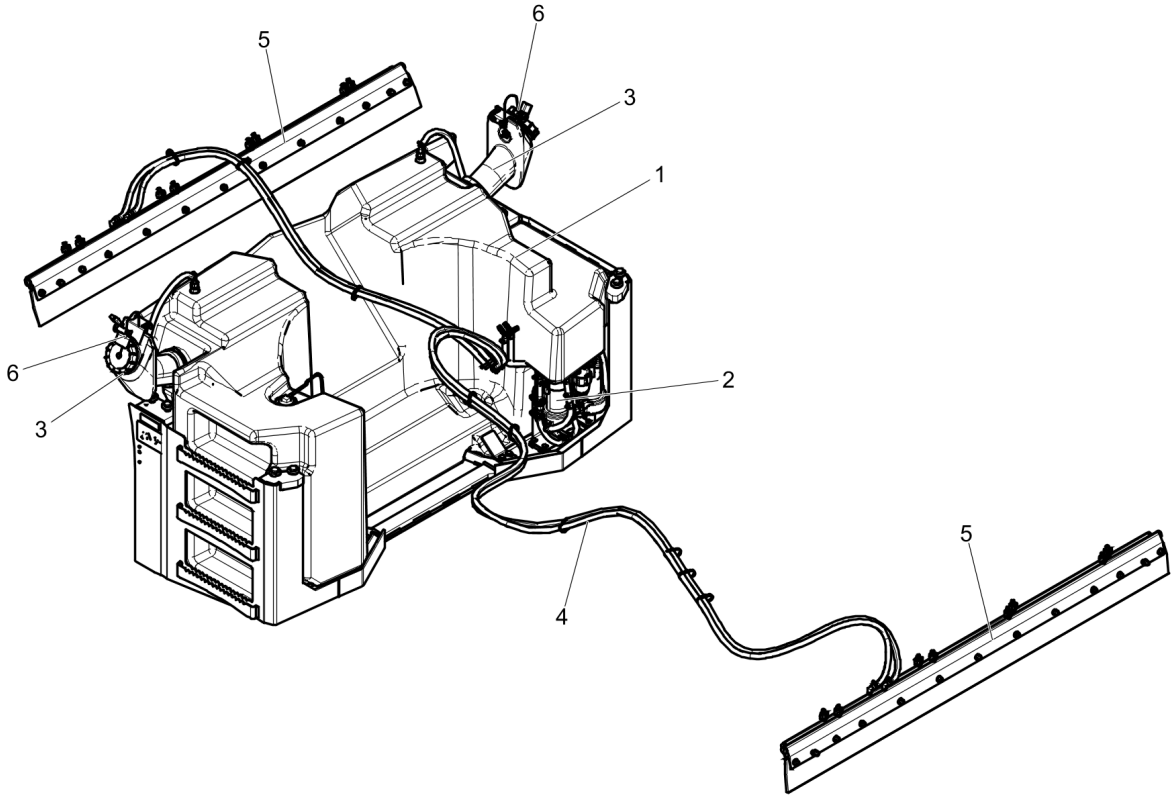

Item	Part No.	Name	Qty	L	SN INFO
1		Water tank module	1		
2		Sprinkler pump module	1		
3		Filling pipe	2		
4		Water hoses	1		
5		Scraper module	2		
6		Lock device	2		

Frame Sprinkler pump module

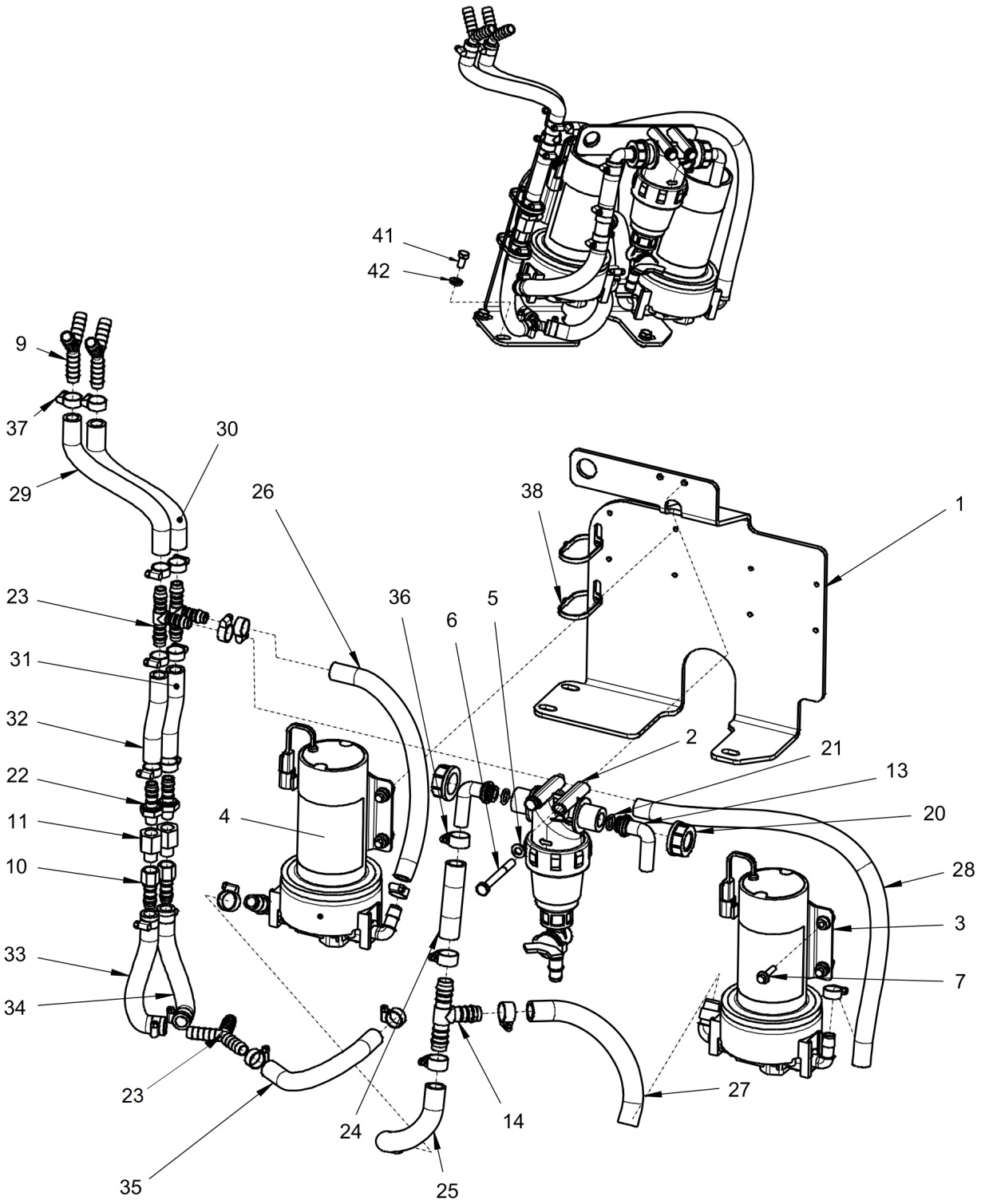

Item	Part No.	Name	Qty	L	SN INFO
1	4812126714	Bracket	1		
2	4812111325	Water filter	1		
2.1	4700791959	O-ring	1		
2.2	4700791949	Filter element	1		
2.3	4700791568	Gasket	1		
2.4	4700379009	Valve	1		
3	4812126685	Sprinkler pump	1		
4	4812126685	Sprinkler pump	1		
5	4700904229	Washer, 8.4x 6x1.5 mm 300HV	2		
6	4700500189	Screw	2		
7	4700500502	Hexagon screw with flange M6 -25	8		
9	4811000107	Hose connection	2		
10	4811000085	Hose connection	2		
11	4700792813	Bypass valve	2		
13	4812111332	Hose connection swivel	2		
14	4700792065	Hose connection	1		
20	4700792779	Swivel nut	2		
21	4700480852	O-ring 70	2		
22	4700901432	Hose connection	2		
23	4700923735	Hose connection	3		
24	4700792073	Hose reinforced	0,08		
25	4700792073	Hose reinforced	0,16		
26	4812112074	Plastic hose (x m)	0,29		
27	4700792073	Hose reinforced	0,21		
28	4812112074	Plastic hose (x m)	0,52		
29	4812112074	Plastic hose (x m)	0,21		
30	4812112074	Plastic hose (x m)	0,19		
31	4812112074	Plastic hose (x m)	0,11		
32	4812112074	Plastic hose (x m)	0,11		
33	4812112074	Plastic hose (x m)	0,20		
34	4812112074	Plastic hose (x m)	0,20		
35	4812112074	Plastic hose (x m)	0,18		
36	4700313003	Hose clamp	6		
37	4700313002	Hose clamp	18		
38	4700313041	Cable ties	N		
41	4700500019	Hexagon screw	3		
42	4700904556	Steel plain washer 8,4x16x3,0	3		

Frame Water tank module, offset

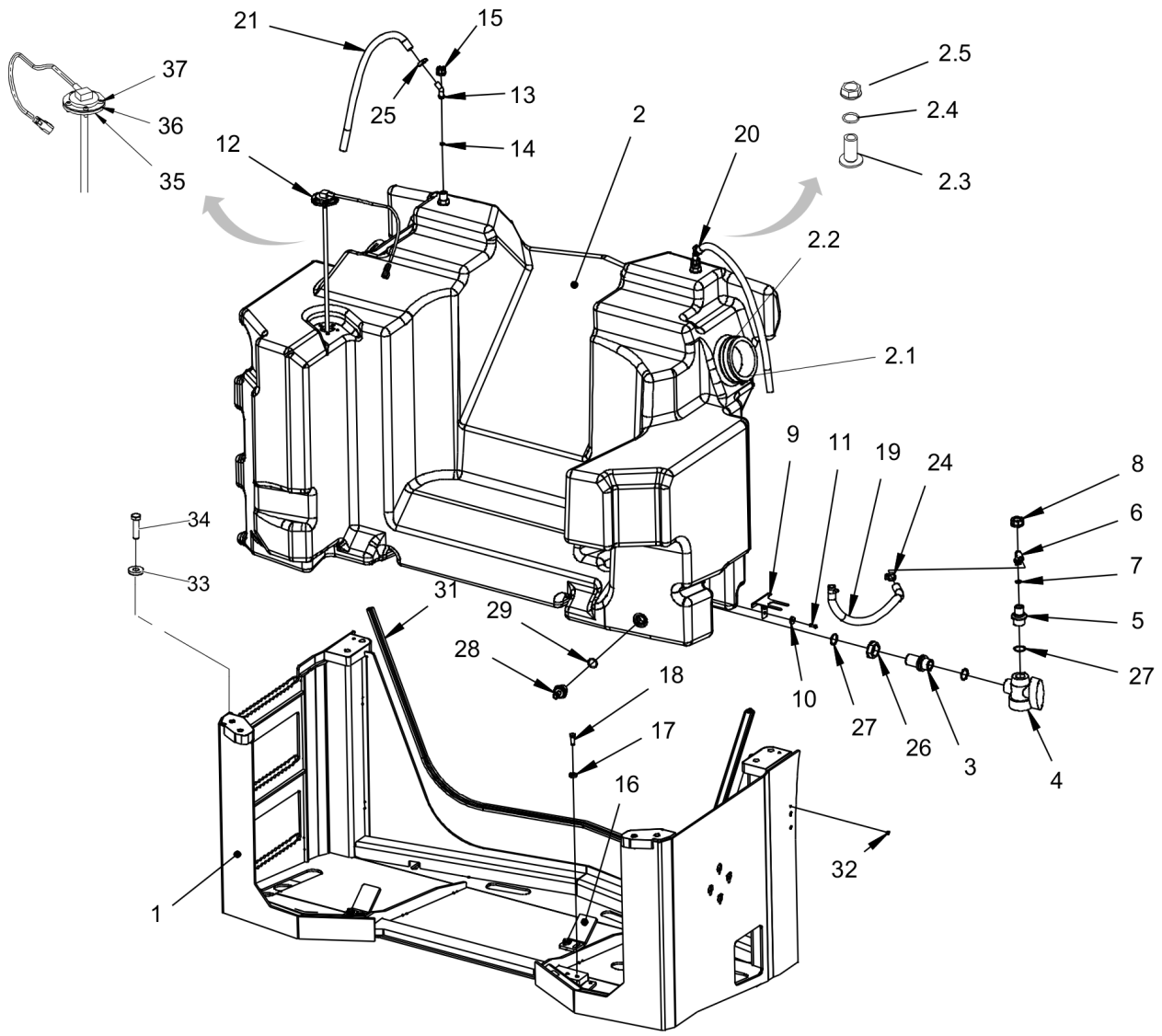

Item	Part No.	Name	Qty	L	SN INFO
1	4812124289	Tank structure	1		
2	4812124377	Water tank, cpl	1		
2.1	4700392235	Gasket	2		
2.2	4700313105	Hose clamp	2		
2.3	4700392230	Grommet	2		
2.4	4700160219	O-ring	2		
2.5	4700392232	Nut	2		
3	4812124333	Bulkhead nipple	1		
4	4812120706	Ball valve	1		
5	4700792781	Reducer nipple	1		
6	4812111332	Hose connection swivel	1		
7	4700480852	O-ring 70	1		
8	4700792779	Swivel nut	1		
9	4812124139	Bracket	1		
10	4700904735	Steel plain washer	2		
11	4700500013	Screw, M6x16 mm 8.8 A2K	2		
12	4700391353	Level sender	1		
13	4700393542	Hose connection	2		
14	4700792600	O-ring 70	2		
15	4700392227	Swivel nut	2		
16	4812123777	Bracket	2		
17	4700904557	Washer, 10.5x22x4 mm 300 HV	4		
18	4700500028	Hex Head screw	4		
19	4700792073	Hose reinforced	0,58		
20	4812112074	Plastic hose (x m)	0,50		
21	4812112074	Plastic hose (x m)	0,50		
24	4700313003	Hose clamp	2		
25	4700313002	Hose clamp	2		
26	4700392224	Lock nut	1		
27	4700160318	O-ring 70	3		
28	4700396672	Hose connection, plastic	1		
29	4700160313	O-ring 70	1		
31	4700903953	Edge trim	2,40		
32	4700902804	Plug	6		
33	4700603007	Washer	8		
34	4700929069	Hexagon head screw	8		
35	4700370745	Flange, cpl	1		
36	4700372718	Lid	1		

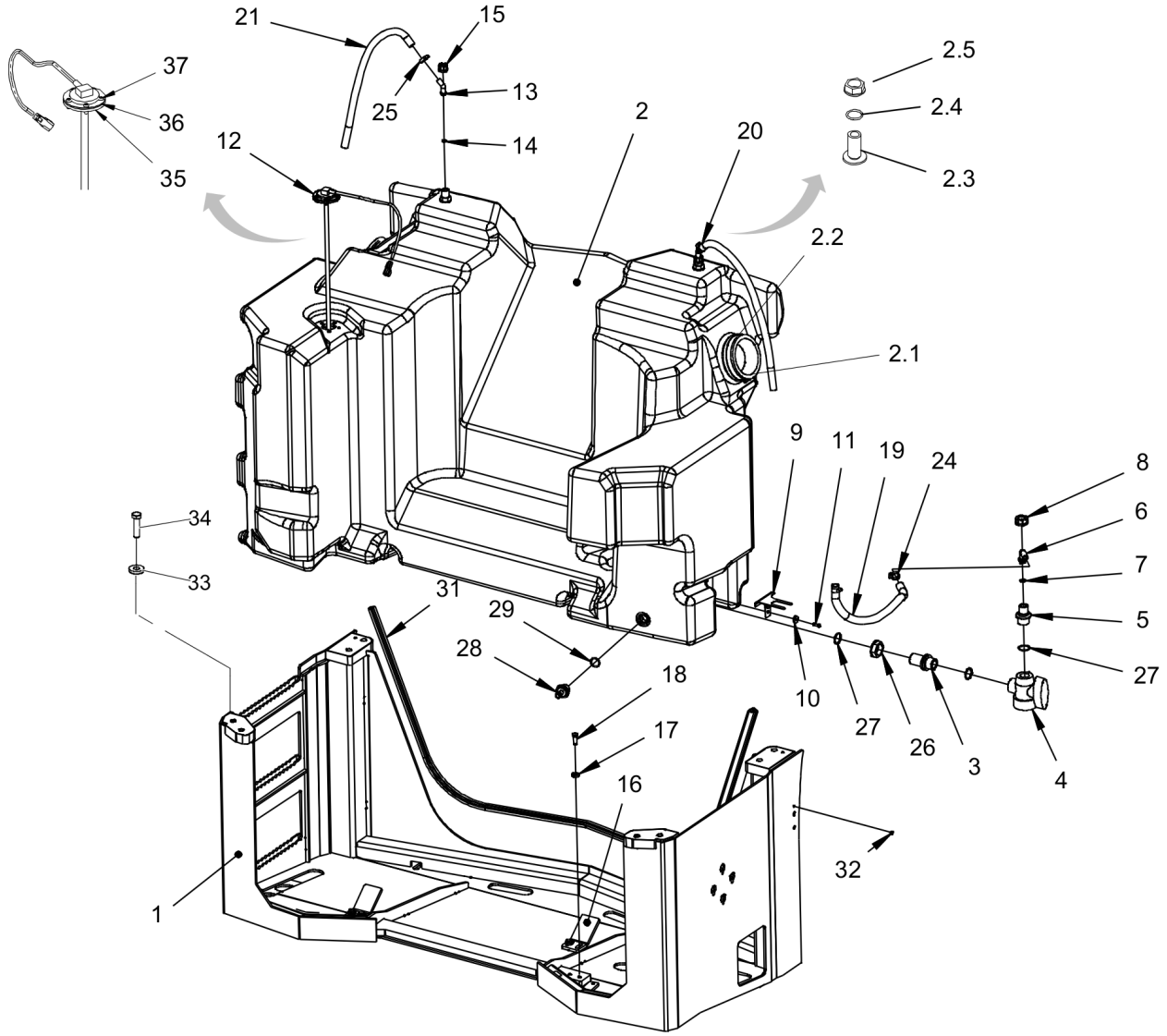
21
15
37
13
25
36
2
12
14
35
20
2.5
2.4
2.3
2.2
2.1
9
11
19
24
8
6
7
5
27
34
33
31
29
28
18
17
16
10
27
26
3
4
32
1

Item	Part No.	Name	Qty	L	SN INFO
37	4700904206	Screw, M6x16 mm	5		

Frame Filling pipe module

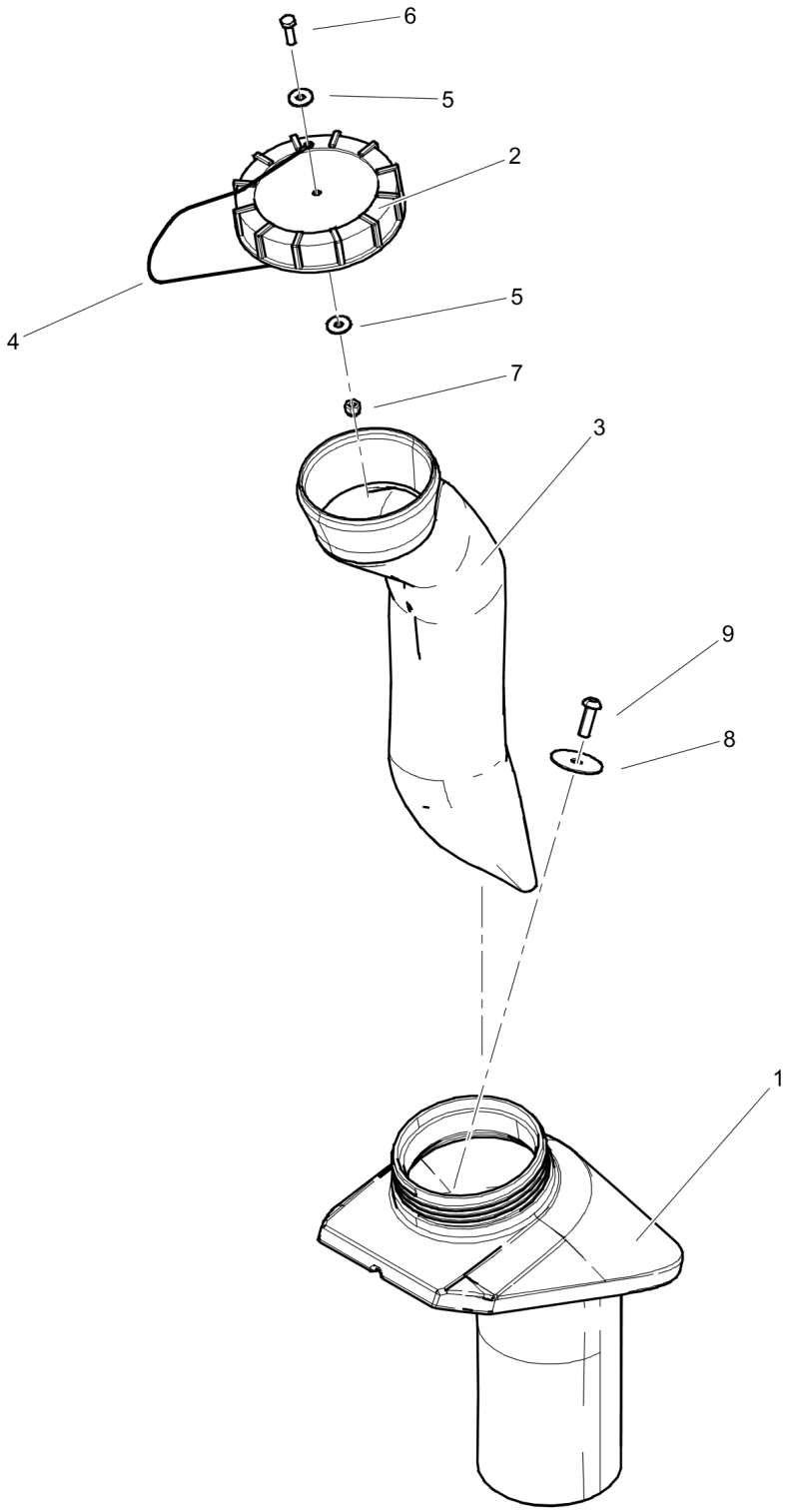

Item	Part No.	Name	Qty	L	SN INFO
1	4812125148	Filling pipe	1		
2	4812126314	Cap	1		
3	4700391444	Strainer	1		
4	4700377253	Wire	1		
5	4700928381	Washer, 6.4x18x1.6 mm	2		
6	4700500040	Screw, M6x20 mm 8.8 A2K	1		
7	4700586002	Lock nut M6 -8	1		
8	4812126306	Plain washer	1		
9	4700904654	Screw, M8 x 25 mm A2-70	1		

Frame Locking device

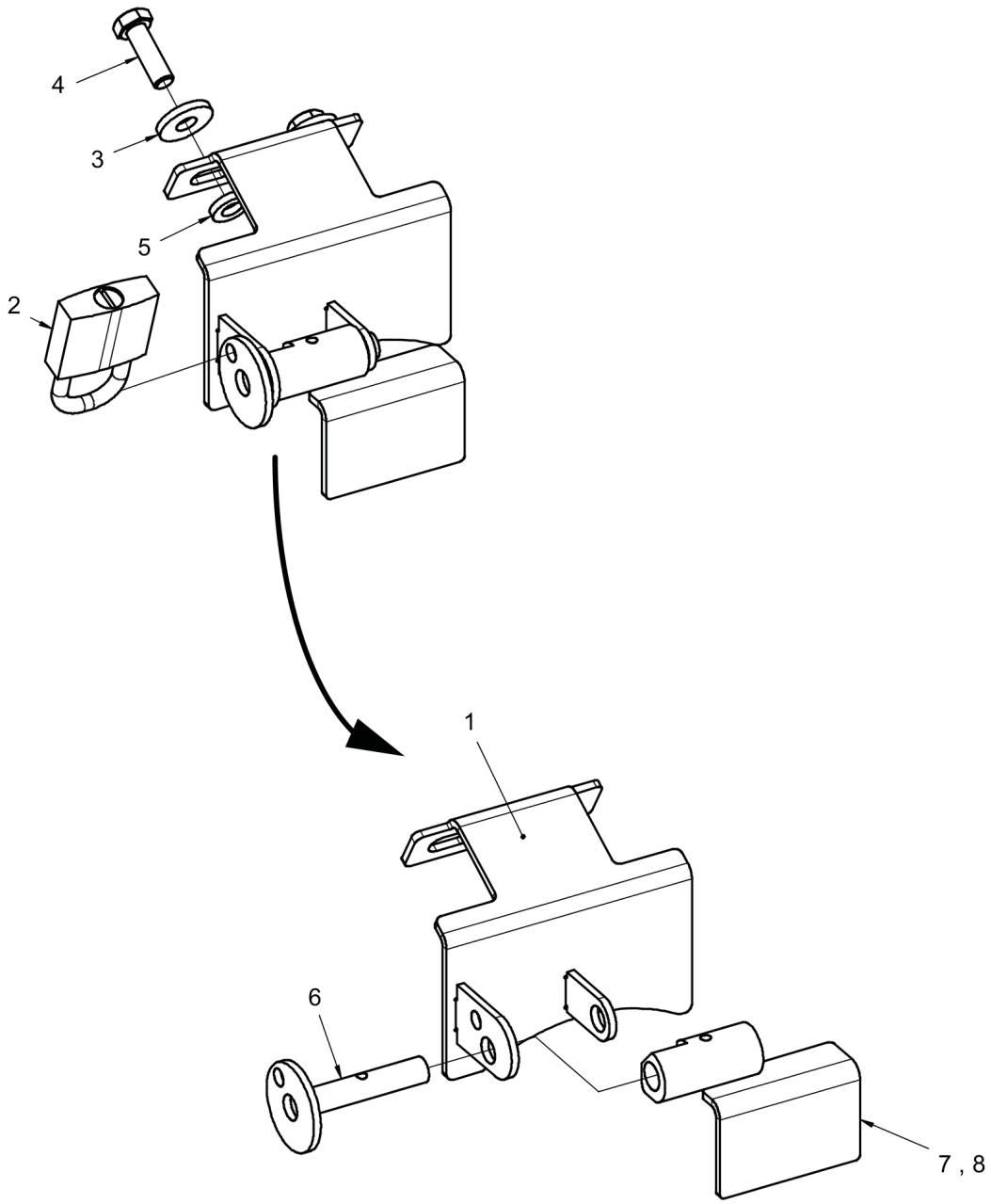

Item	Part No.	Name	Qty	L	SN INFO
1	4812127449	Lock bracket	1		
2	4700358881	Pad lock	1		
3	4700904640	Washer, 8.4x22x3 mm 300HV	2		
4	4700500021	Screw, M8x25 mm 8.8 A2K	2		
5	4700904556	Steel plain washer 8,4x16x3,0	2		
6	4700394591	Shaft	1		
7	4812127075	Lock plate	1		
8	4700629008	Dowel pin	1		

Frame Sprinkler hoses

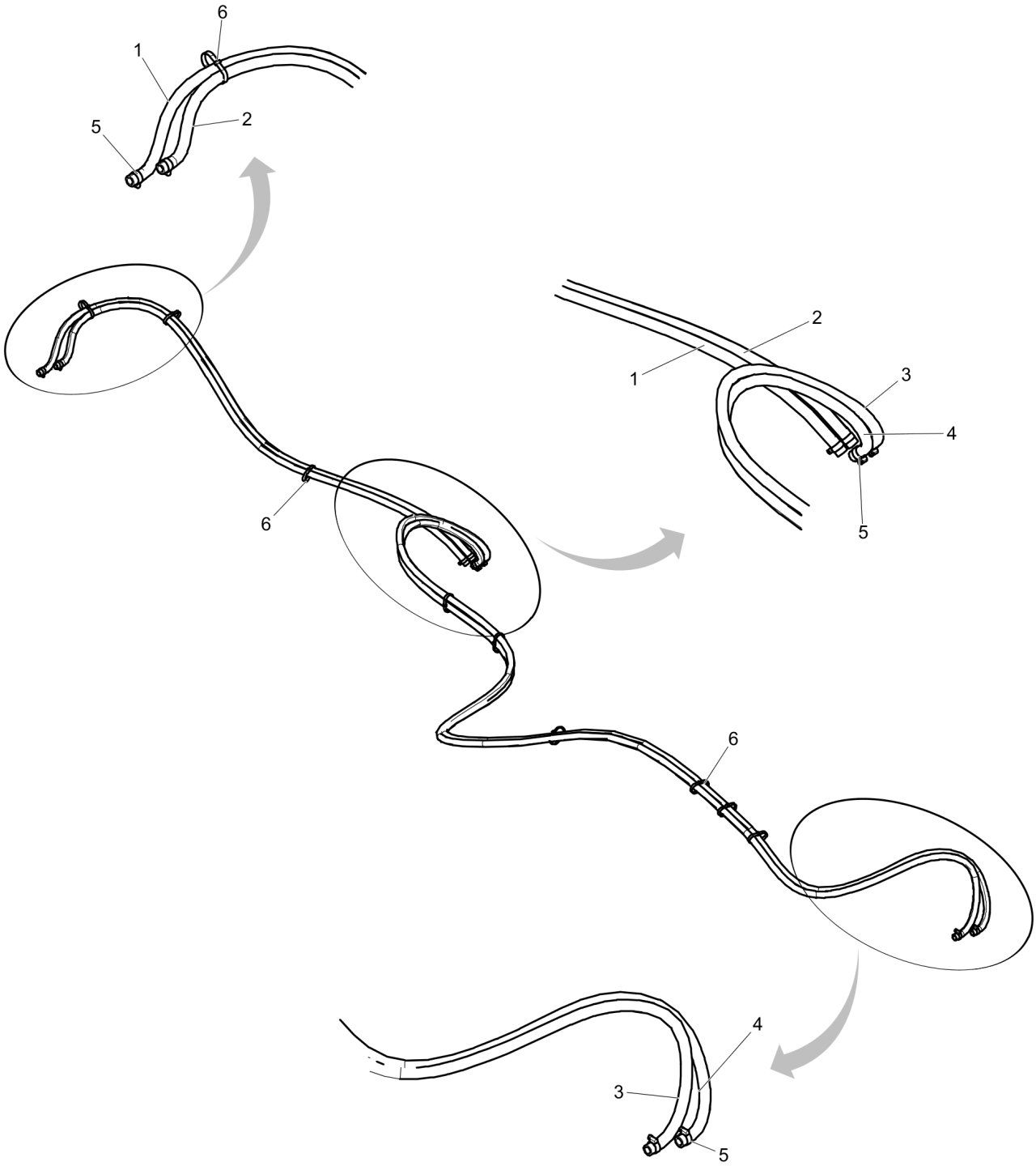

Item	Part No.	Name	Qty	L	SN INFO
1	4812112074	Plastic hose (x m)	1,96		
2	4812112074	Plastic hose (x m)	1,86		
3	4812112074	Plastic hose (x m)	4,56		
4	4812112074	Plastic hose (x m)	4,50		
5	4700313002	Hose clamp	8		
6	4700313102	Cable ties	9		

Frame Scraper module, with nozzles

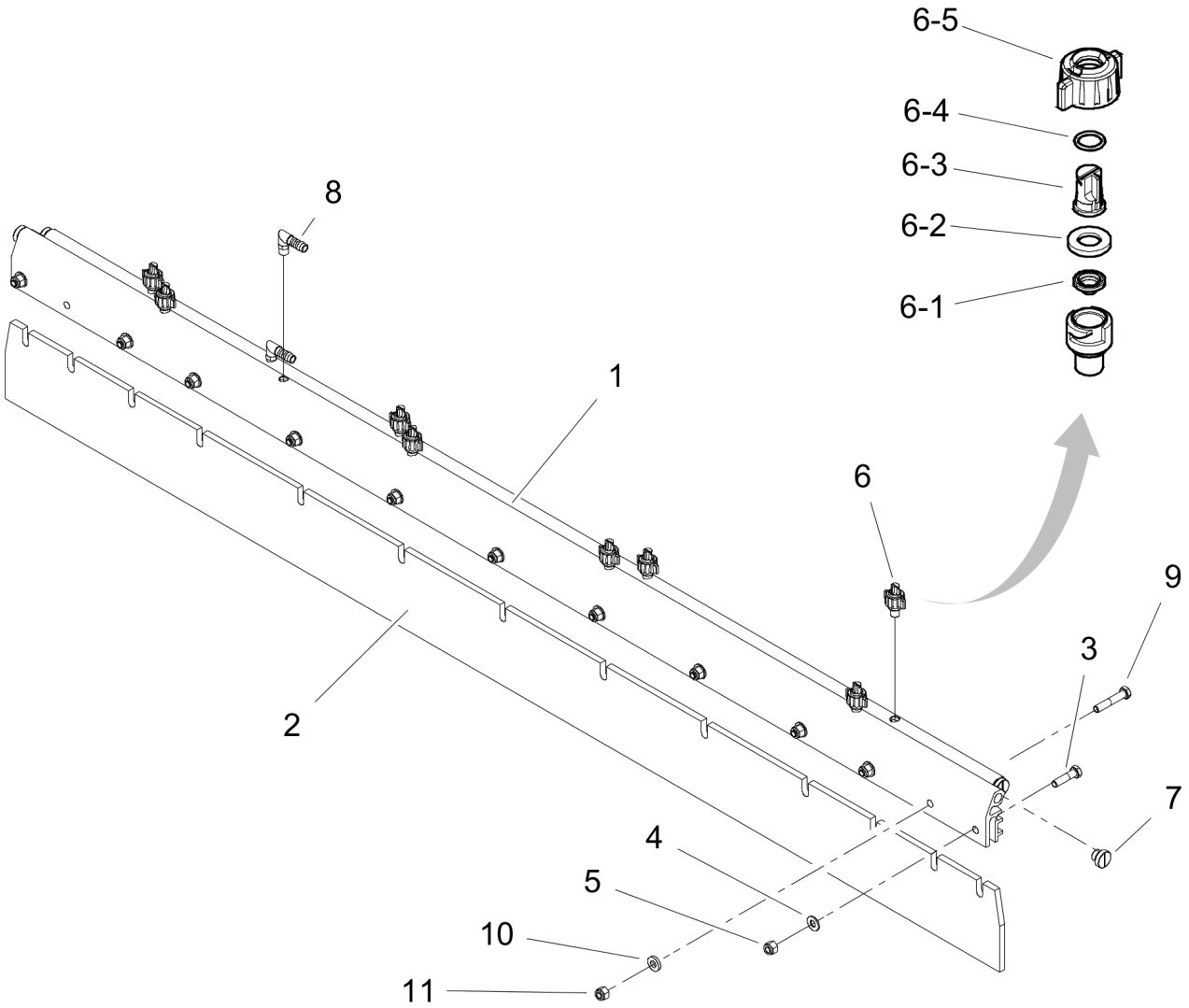

Item	Part No.	Name	Qty	L	SN INFO
1	4812123496	Sprinkler pipe	1		
2	4812123497	Scraper blade	1		
3	4700500031	Screw M10x40	11		
4	4700904230	Steel plain washer	11		
5	4700586018	Lock nut M10	11		
6	4812124321	Retainer, nozzle, strainer, yellow	8		
6-1	4812124324	Strainer	1		
6-2	4812124325	Gasket	1		
6-3	4812124327	Nozzle, yellow 0.8	1		
-	4812124328	Nozzle, blue 1.0	1		
-	4812124329	Nozzle, red 1.2	1		
-	4812124330	Nozzle, brown 1.3	1		
6-4	4700160268	O-ring	1		
6-5	4812124323	Cap, blue	1		
7	4700792072	End plug	4		
8	4700791776	Adapter	2		
9	4700500032	Screw M10 x 55	2		
10	4700904557	Washer, 10.5x22x4 mm 300 HV	2		
11	4700586018	Lock nut M10	2		

Frame Sprinkler tank module, rear

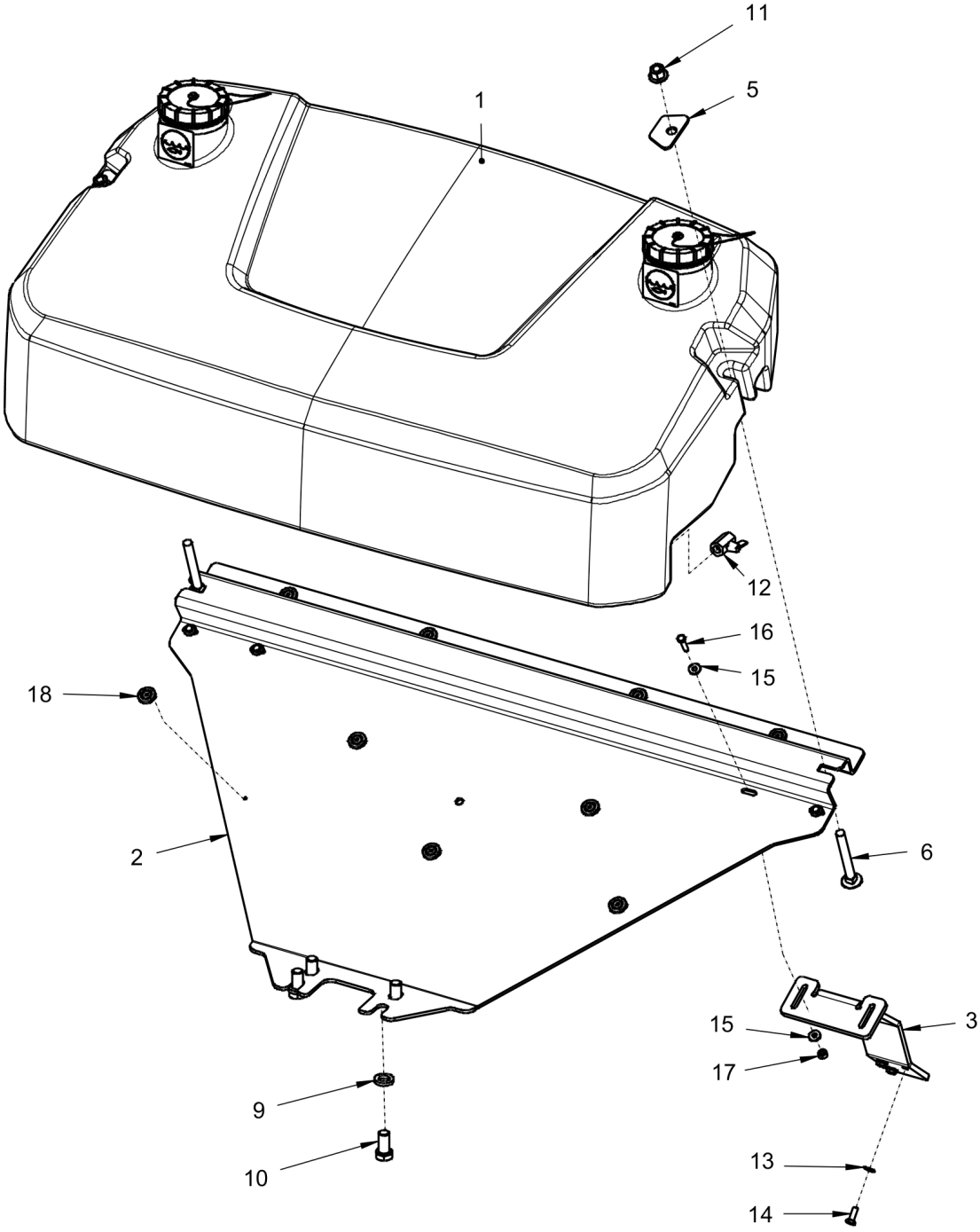

Item	Part No.	Name	Qty	L	SN INFO
1		Sprinkler tank, rear	1		
2	4812127365	Bracket	1		
3	4812127353	Bracket	2		
5	4812126694	Plate	2		
6	4700904405	Screw	2		
9	4700903290	Steel plain washer 21x36x6	4		
10	4700500200	Screw M20-2,5x40H 8,8	4		
11	4700902289	Nut	2		
12	4700925599	Ball valve	1		
13	4700904230	Steel plain washer	6		
14	4700500028	Hex Head screw	6		
15	4700904640	Washer, 8.4x22x3 mm 300HV	8		
16	4700500230	Hex. screw	4		
17	4700570005	Hexagon nut	4		
18	4812112097	Shock absorber	9		

Frame Sprinkler tank, rear

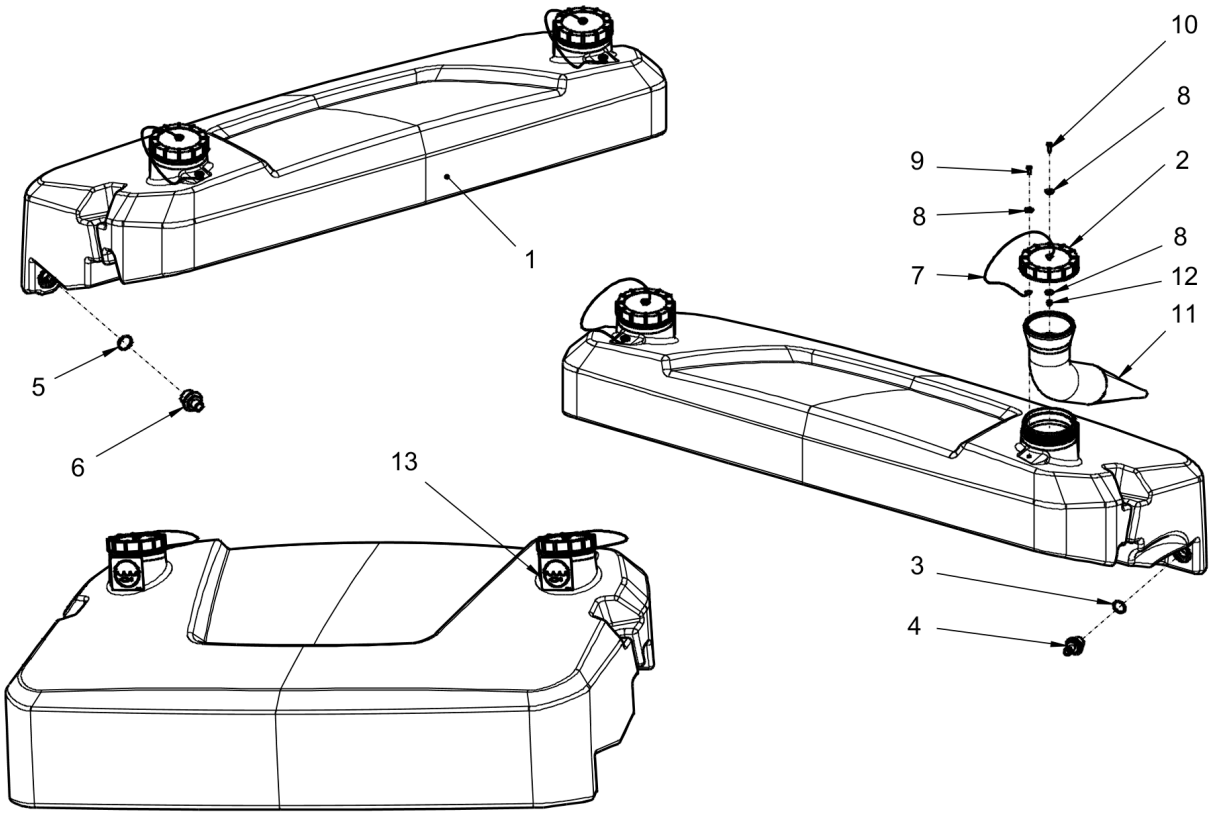

Item	Part No.	Name	Qty	L	SN INFO
1	4812126425	Sprinkler tank	1		
2	4812126314	Cap	2		
3	4700160313	O-ring 70	1		
4	4700396672	Hose connection, plastic	1		
5	4700160318	O-ring 70	1		
6	4700392226	Reducer nipple	1		
7	4700377253	Wire	2		
8	4700928381	Washer, 6.4x18x1.6 mm	6		
9	4700500012	Hex. screw	2		
10	4700500013	Screw, M6x16 mm 8.8 A2K	2		
11	4700391444	Strainer	2		
12	4700586002	Lock nut M6 -8	2		
13	4700991657	Decal "WATER"	2		

Frame Sprinkler hose module, extra tank rear

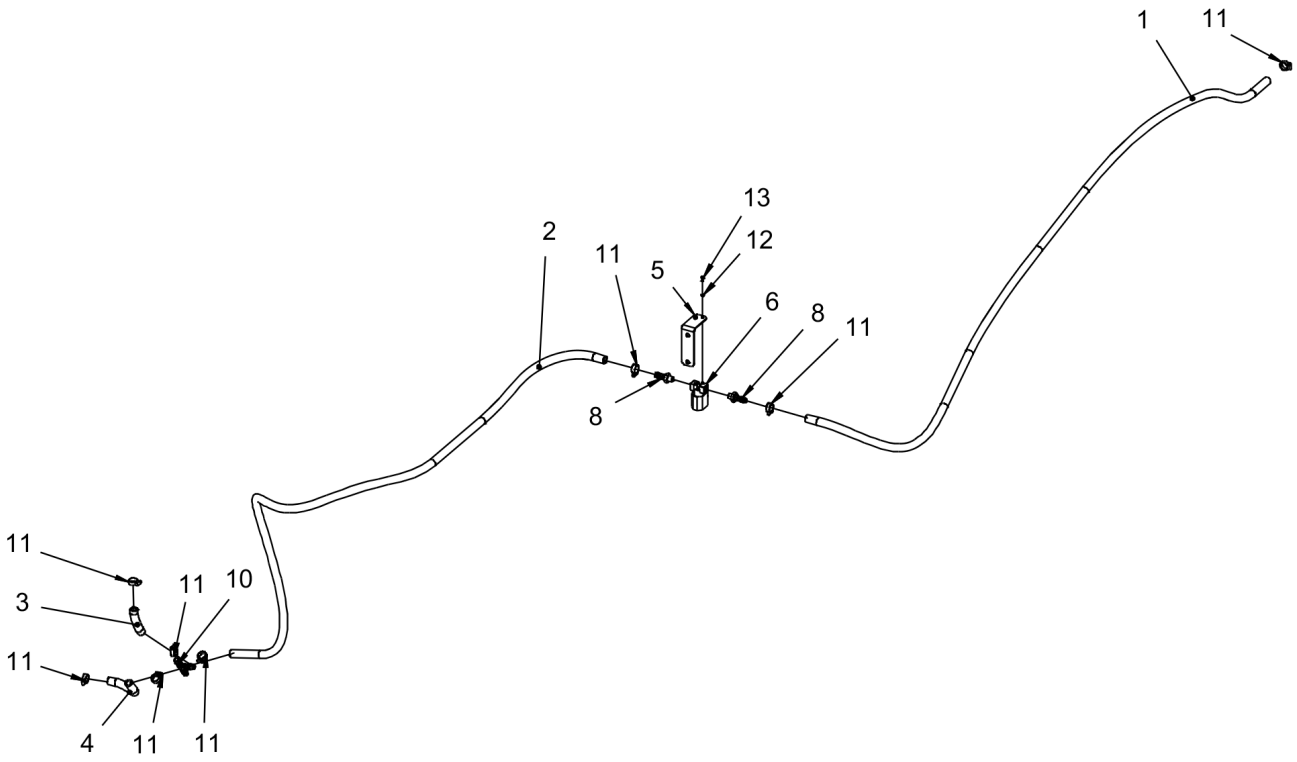

Item	Part No.	Name	Qty	L	SN INFO
1	4812112074	Plastic hose (x m)	2		
2	4812112074	Plastic hose (x m)	2		
3	4812112074	Plastic hose (x m)	0,05		
4	4812112074	Plastic hose (x m)	0,15		
5	4812127224	Bracket	1		
6	4700391438	Solenoid valve	1		
8	4700901432	Hose connection	2		
10	4700923735	Hose connection	1		
11	4700313002	Hose clamp	8		
12	4700904698	Plain washer	2		
13	4700500001	Screw	2		

Drum Drum

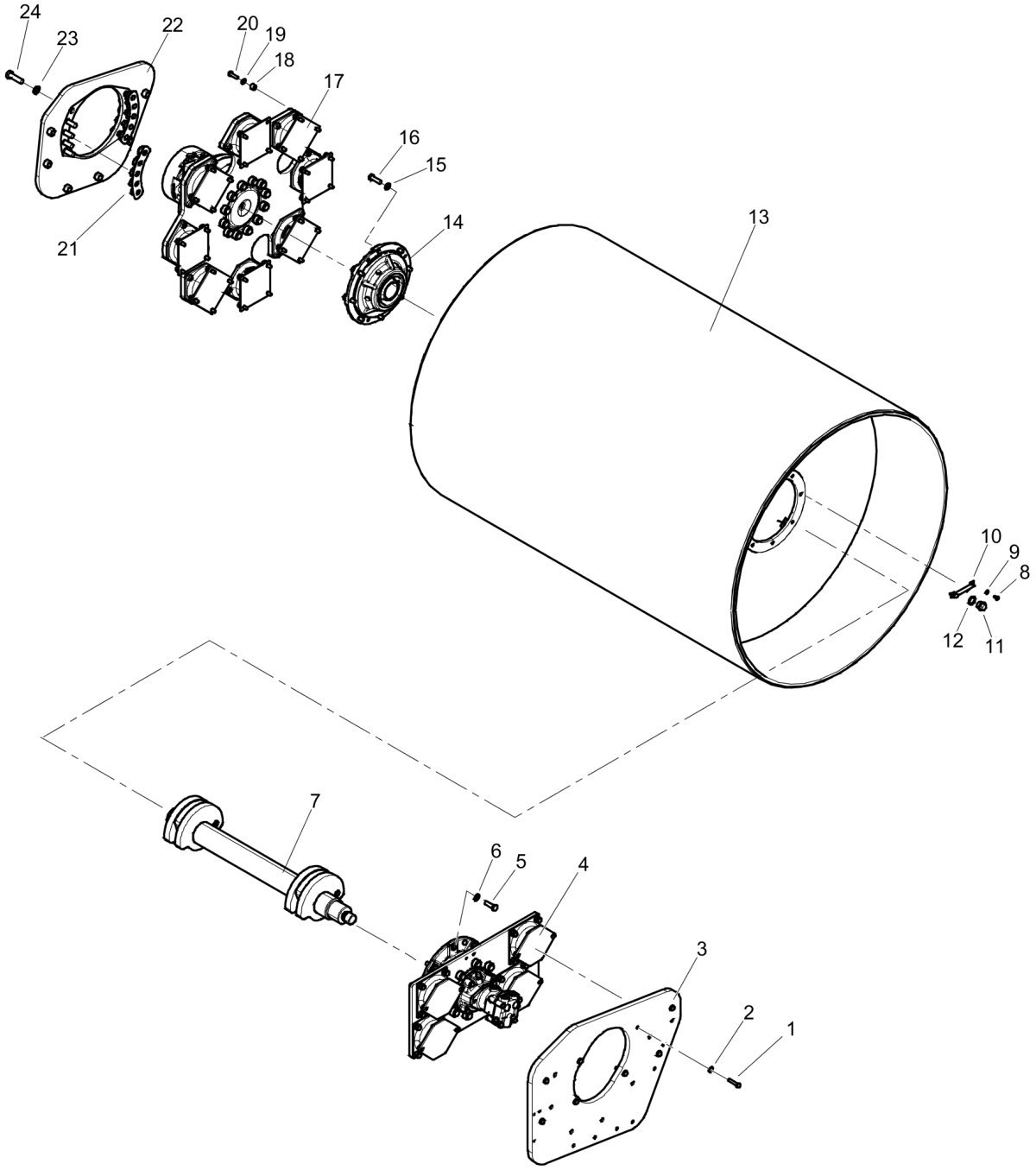

Item	Part No.	Name	Qty	L	SN INFO
1	4812110641	Hexagon screw w Tuflok M12x55 10.9 GEOMET	8		
2	4700904231	Washer, 13x24x2 mm 300 HV	8		
3	4812124676	Bracket	1		
4	-	Drum suspension module	1		
5	4700500070	Hex. screw	8		
6	4700904232	Steel plain washer	8		
7	4812123788	Eccentric shaft	1		
8	4700500019	Hexagon screw	2		
9	4700904229	Washer, 8.4x 6x1.5 mm 300HV	2		
10	4700359955	Drop plate	1		
11	4700343744	Magnetic plug	1		
12	4700162017	Seal ring	1		
13	4700379749	Drum	1		
14	-	Drum bearing	1		
15	4700904232	Steel plain washer	8		
16	4700500070	Hex. screw	8		
17	-	Drum drive module	1		
18	4812110346	Spacer	32		
19	4700904231	Washer, 13x24x2 mm 300 HV	32		
20	4812110444	Hexagon head screw w Tuflok M12x40H 8.8 A3K	32		
21	4812123162	Nut plate	2		
22	4812123000	Bracket	1		
23	4700904233	Steel plain washer 21x36x3	10		
24	4700500284	Screw	10		

Drum Drum drive

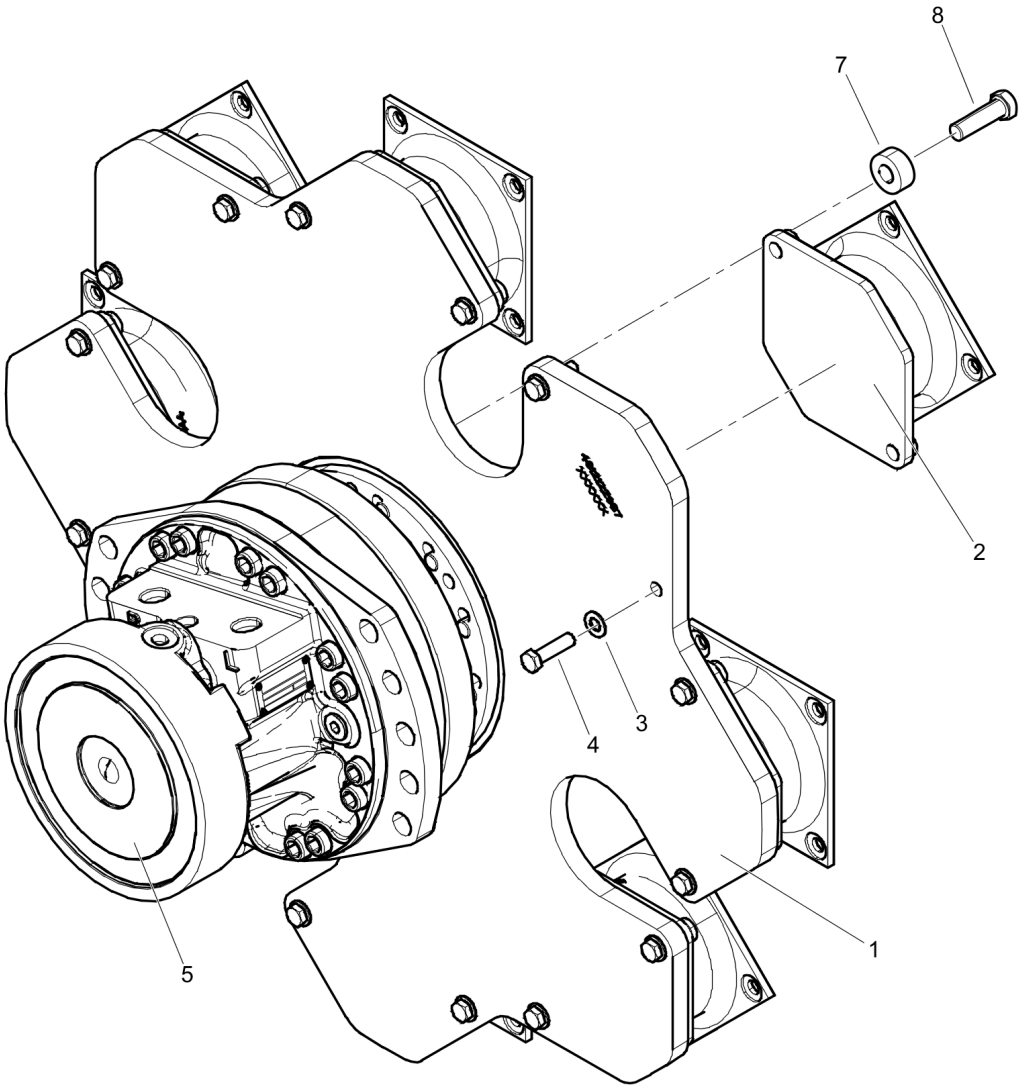

Item	Part No.	Name	Qty	L	SN INFO
1	4812122987	Driving disc	1		
2	4700394250	Shock absorber	8		
3	4700904231	Washer, 13x24x2 mm 300 HV	16		
4	4812110642	Hexagon screw w Tuflok M12x45 10.9 GEOMET	16		
5	4812123057	Hydraulic motor	1	A	
5	4812123058	Hydraulic motor	1	B	
7	4700384114	Spacer	12		
8	4700947698	Hex. head screw	12		

Comments for Page: Drum drive

(L)OCAL REMARKS

A | Front hydraulic motor

B | Rear hydraulic motor

Drum Drum bearing

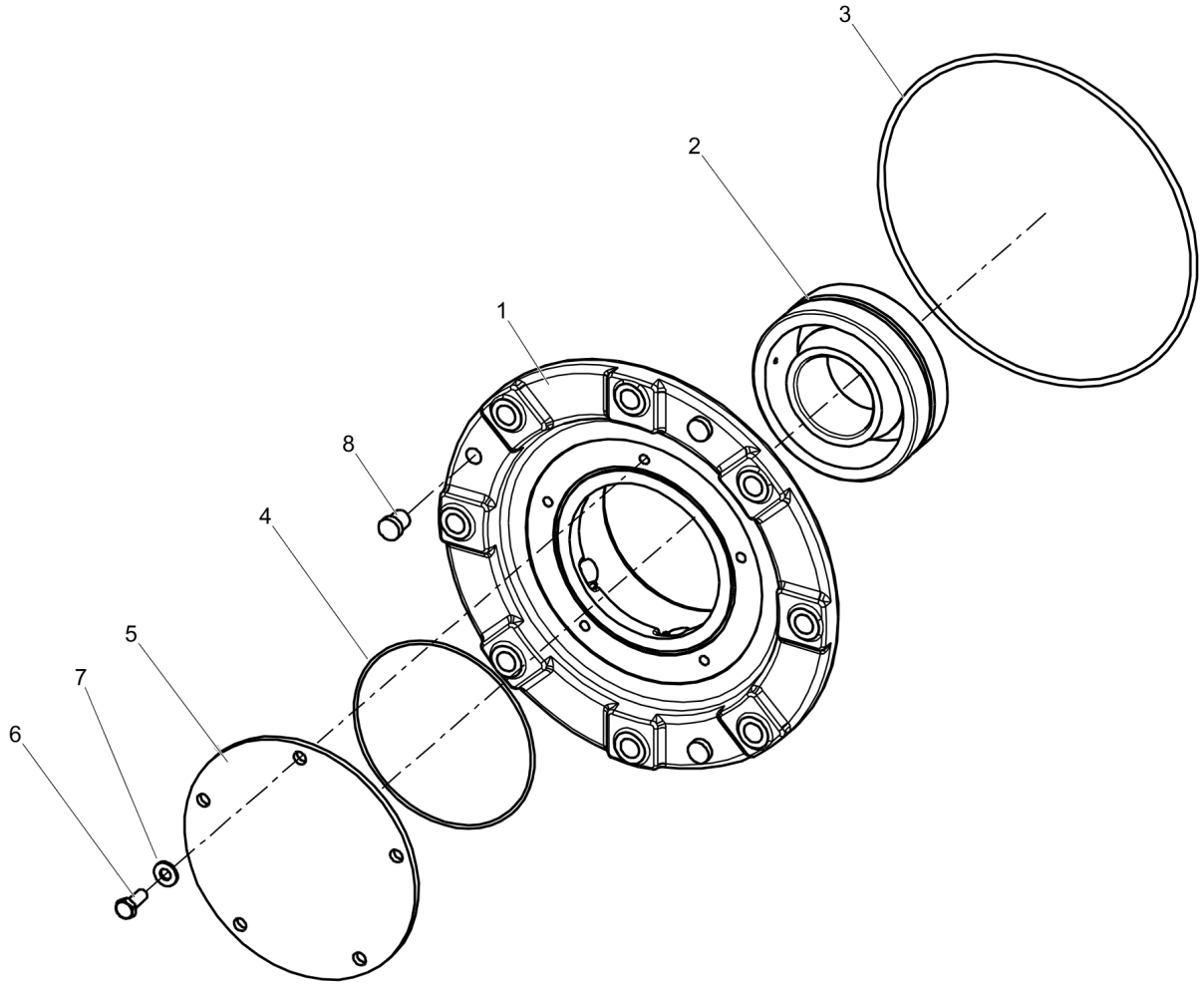

Item	Part No.	Name	Qty	L	SN INFO
1	4700379652	Bearing housing	1		
2	4700792270	Spherical roller bearing	1		
3	4700160344	O-ring 70	1		
4	4700160045	O-ring 70	1		
5	4700391029	Cover	1		
6	4700500028	Hex Head screw	5		
7	4700904230	Steel plain washer	5		
8	4700900775	Plug	3		

Drum Drum suspension

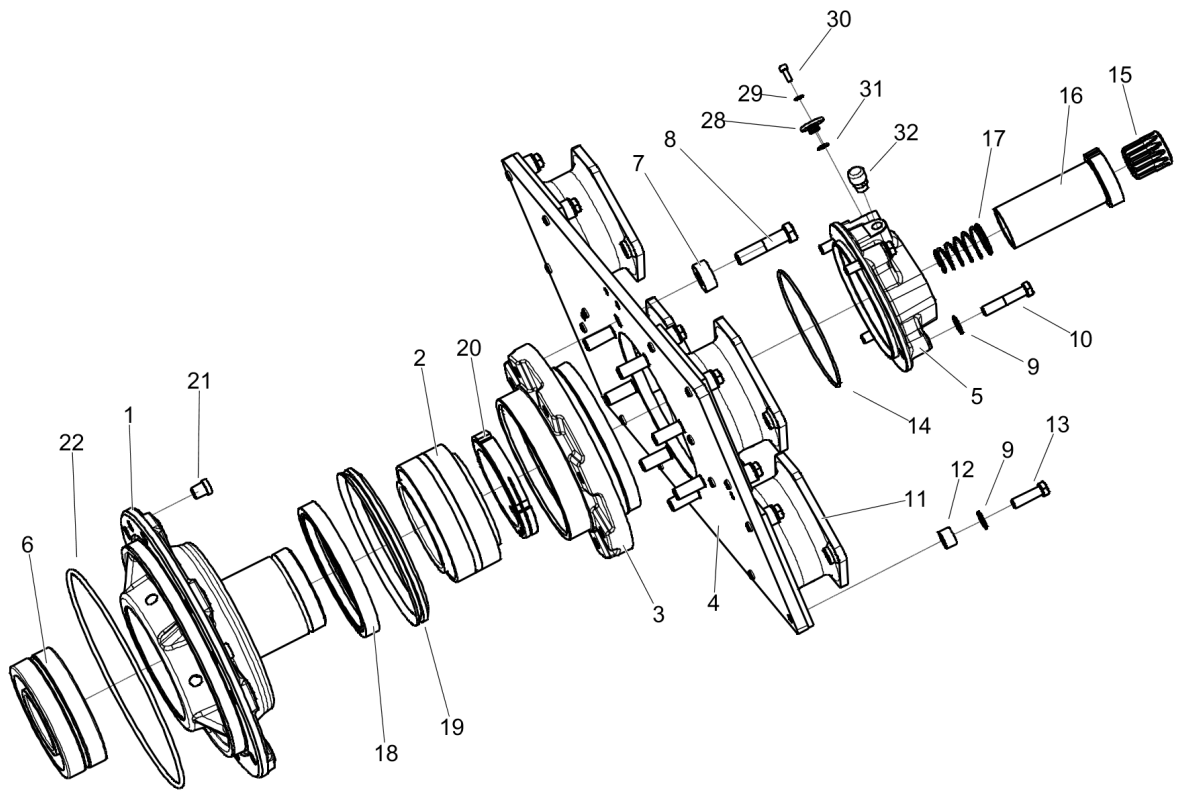

V

Item	Part No.	Name	Qty	L	SN INFO
1	4700379650	Drum bearing housing	1		
2	4700116041	Taper roller bearing	1		
3	4700343318	Bearing housing	1		
4	4812123199	Bracket	1		
5	4812125853	Motor adapter	1		
6	4700792270	Spherical roller bearing	1		
7	4700384114	Spacer	8		
8	4700500082	Screw M16x70 8.8	8		
9	4700904231	Washer, 13x24x2 mm 300 HV	20		
10	4700500049	Screw, M12x60 mm 8.8 A3K	4		
11	4812126045	Shock absorber	4		
12	4812110346	Spacer	16		
13	4812110444	Hexagon head screw w Tuflok M12x40H 8.8 A3K	16		
14	4700160105	O-ring 70	1		
15	4700340862	Splined sleeve	1		
16	4812122708	Wheel	1		
17	4700349715	Spring	1		
18	4700386272	Sealing	1		
19	4700929447	V-ring	1		
20	4812112413	Shaft nut	1		
21	4700900775	Plug	3		
22	4700160344	O-ring 70	1		
28	4812123007	Plug	1		
29	4700904228	Washer 6,4x12x1,5	1		
30	4700508002	Cylinder screw	1		
31	4700160188	O-ring	1		
32	4700926736	Breather	1		

Drum Weight module 40kg

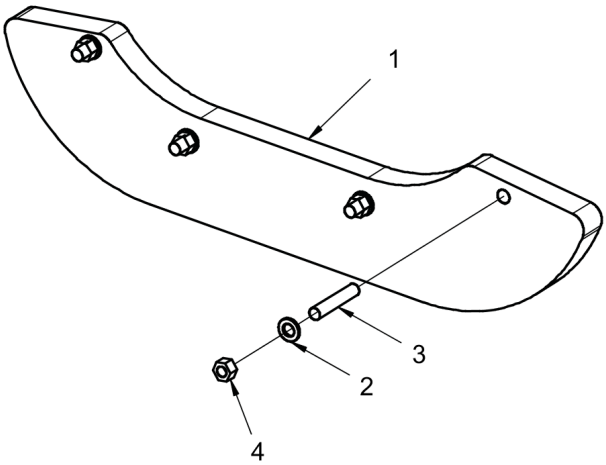

Item	Part No.	Name	Qty	L	SN INFO
1	4812126423	Weight	1		
2	4700904232	Steel plain washer	4		
3	4812125416	Stud	4		
4	4700570008	Hex. nut	4		

Drum Weight module 10kg

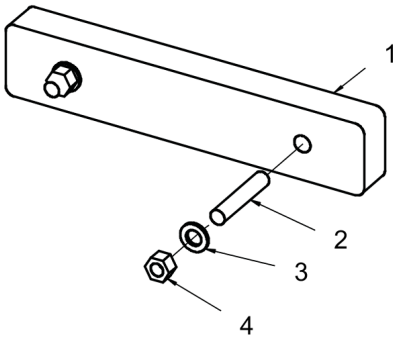

Item	Part No.	Name	Qty	L	SN INFO
1	4812127401	Weight	1		
2	4812125416	Stud	2		
3	4700904232	Steel plain washer	2		
4	4700570008	Hex. nut	2		

Engine Engine assembly

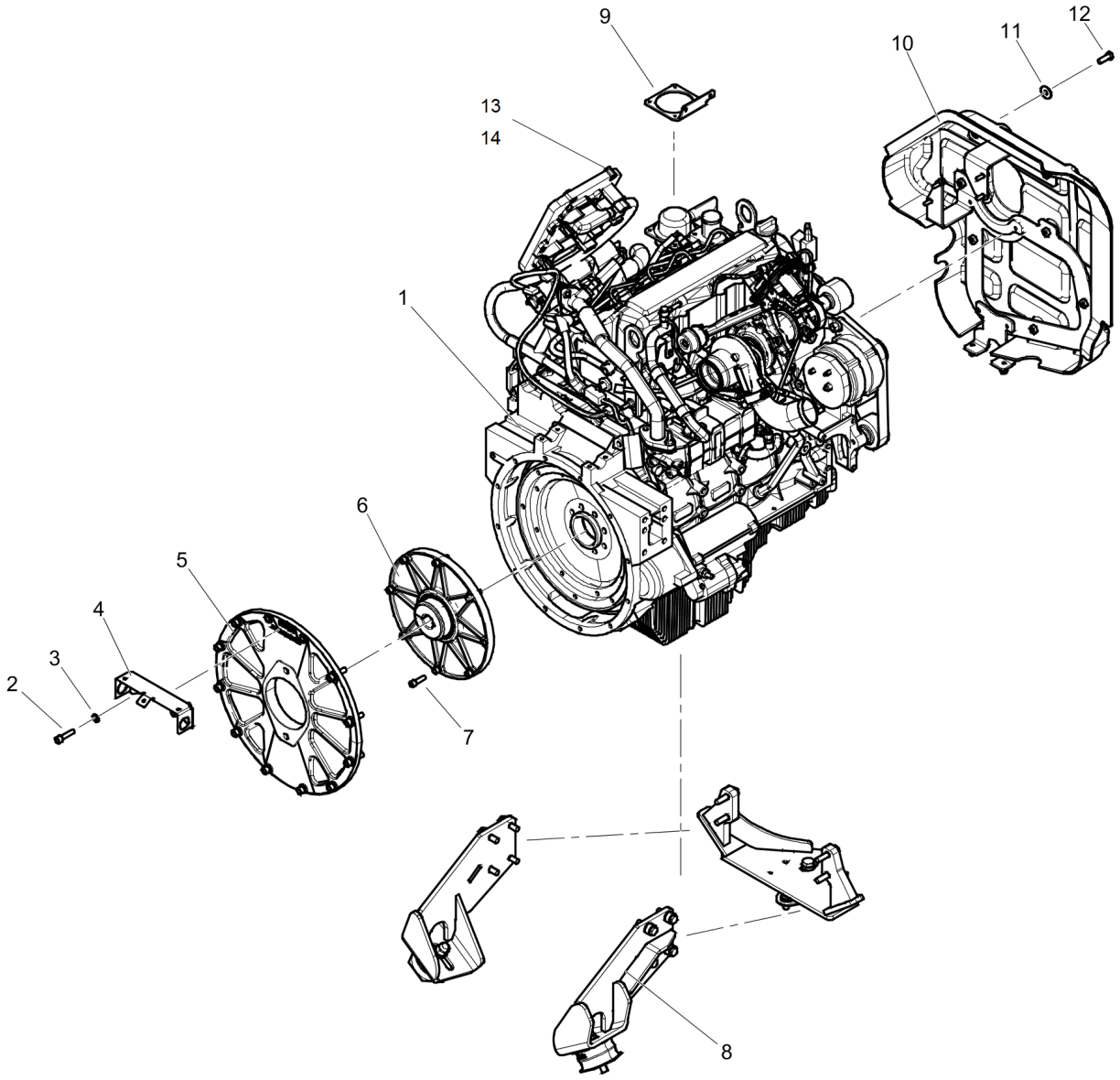

Item	Part No.	Name	Qty	L	SN INFO
1	-	Engine	1		
2	4700508080	Screw	12		
3	4700904637	Washer	12		
4	4812112355	Holder	1		
5	4700394169	Pump bracket	1		
6	4700391358	Coupling	1		
7	4700509025	Screw 3/8-16UNCx32 8,8	8		
8	-	Engine bracket	1		
9	4812125357	Bracket	1		
10	-	Belt guard	1		
11	4700928441	Washer, 21 x 45 mm	7		
12	4700500029	Steel plain washer	7		
13	4700904229	Washer, 8.4x 6x1.5 mm 300HV	4		
14	4700508057	Screw	4		

Engine 4812124294 Engine Cummins QSF 3.8 T4

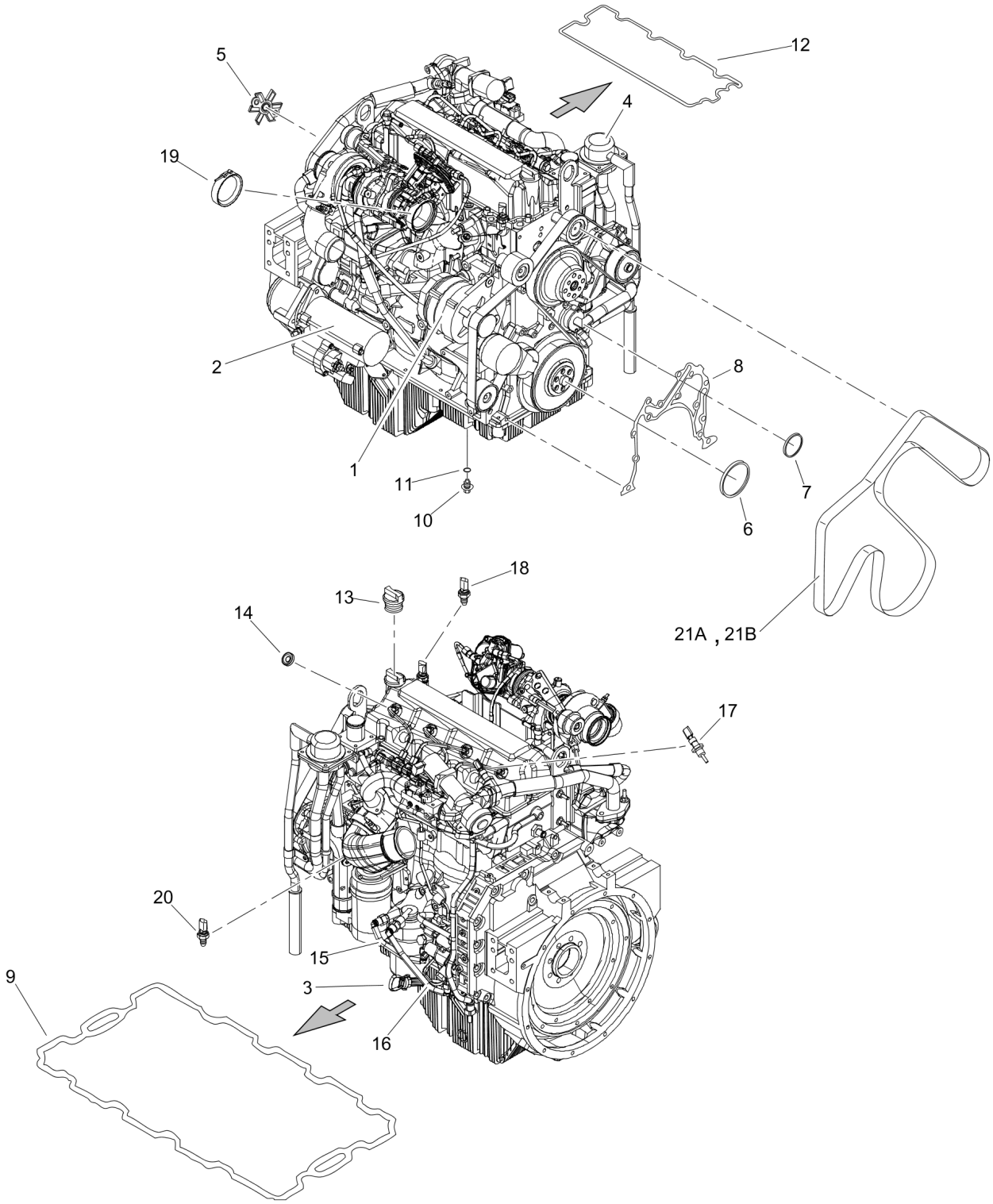

Item	Part No.	Name	Qty	L	SN INFO
1	4812160892	Alternator	1		
2	4812159499	Starter motor	1		
3	4812160893	Dipstick	1		
4	4812161372	Breather, crankcase	1		
5	4812161373	Breather, oil separator	1		
6	4812159964	Seal, oil	1		
7	4812161374	Seal, oil	1		
8	4812161375	Gasket, front cover	1		
9	4812161376	Seal, oil pan	1		
10	4812161377	Plug, threaded	1		
11	4812161378	Seal, d ring	1		
12	4812160896	Gasket, valve cover	1		
13	4812160895	Cap, filler	1		
14	4812161379	Seal, grommet	1		
15	4812161380	Tube, fuel supply	1		
16	4812161381	Tube, fuel supply	1		
17	4812101815	EGR temperature sensor	1		
18	4812101816	EGR pressure sensor	1		
19	4700929185	Clamp	1		
20	4700940533	Oil pressure sensor	1		
21A	4812160897	Belt, V Ribbed	1		
21B	-	Belt, AC compressor	1		

Engine Engine bracket module

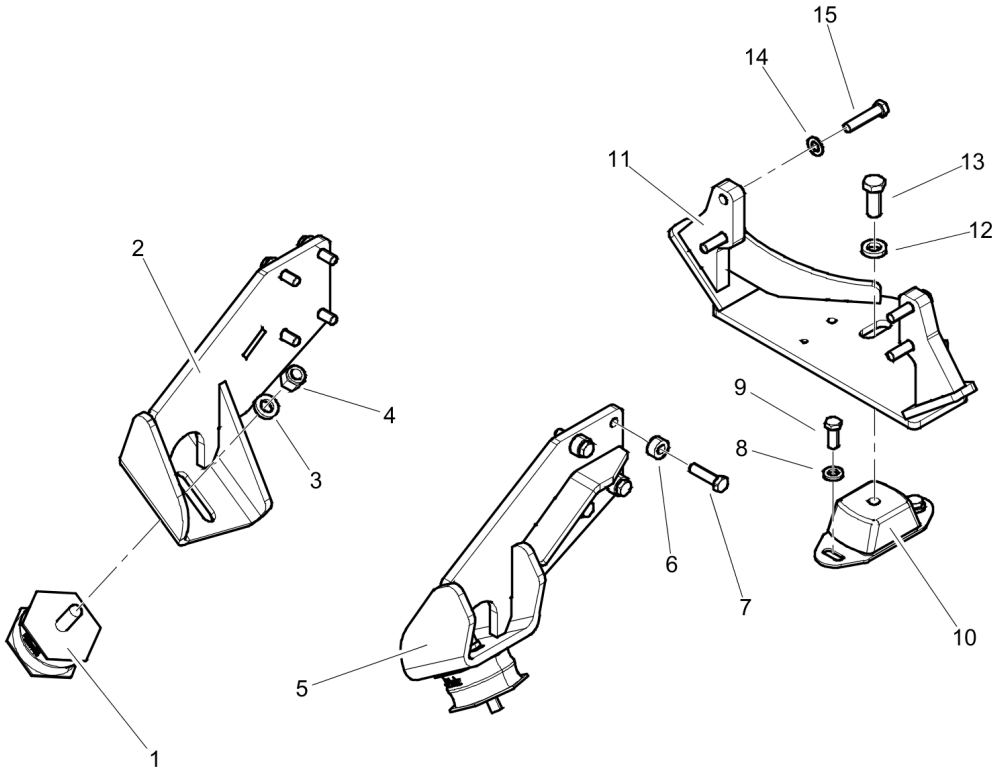

Item	Part No.	Name	Qty	L	SN INFO
1	4812114396	Shock absorber	2		
2	4812123094	Engine bracket	1		
3	4700603007	Washer	2		
4	4700586021	Lock nut	2		
5	4812123257	Engine bracket	1		
6	4700500056	Screw, M12x45 mm 8.8 A3K	8		
7	4700359989	Spacer sleeve	8		
8	4700904703	Plain washer 13x24x4 mm	2		
9	4700500046	Hex. head screw M12x030H	2		
10	4812123919	Shock absorber	1		
11	4812123093	Engine bracket	1		
12	4700603007	Washer	1		
13	4700500093	Hex. screw	1		
14	4700904231	Washer, 13x24x2 mm 300 HV	4		
15	4700500111	Screw, M12x055, 8.8	4		

Engine Belt guard module

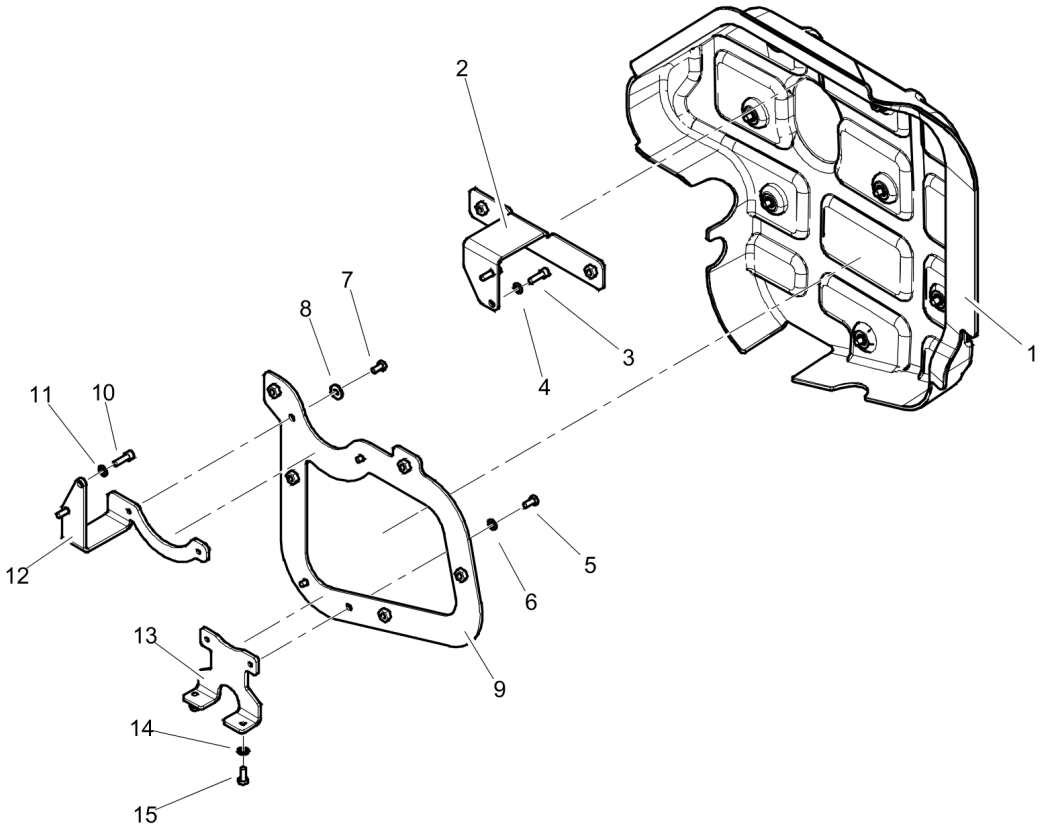

Item	Part No.	Name	Qty	L	SN INFO
1	4812126253	Belt guard	1		
2	4812126254	Bracket	1		
3	4700508092	Screw	2		
4	4700904229	Washer, 8.4x 6x1.5 mm 300HV	2		
5	4700500019	Hexagon screw	2		
6	4700904229	Washer, 8.4x 6x1.5 mm 300HV	2		
7	4700500019	Hexagon screw	2		
8	4700904229	Washer, 8.4x 6x1.5 mm 300HV	2		
9	4812126256	Bracket	1		
10	4700508019	Cylinder screw	2		
11	4700904229	Washer, 8.4x 6x1.5 mm 300HV	2		
12	4812126255	Bracket	1		
13	4812124096	Bracket	1		
14	4700904229	Washer, 8.4x 6x1.5 mm 300HV	2		
15	4700500053	Screw, M8x20 mm 8.8 A2K	2		

Engine Air filter module

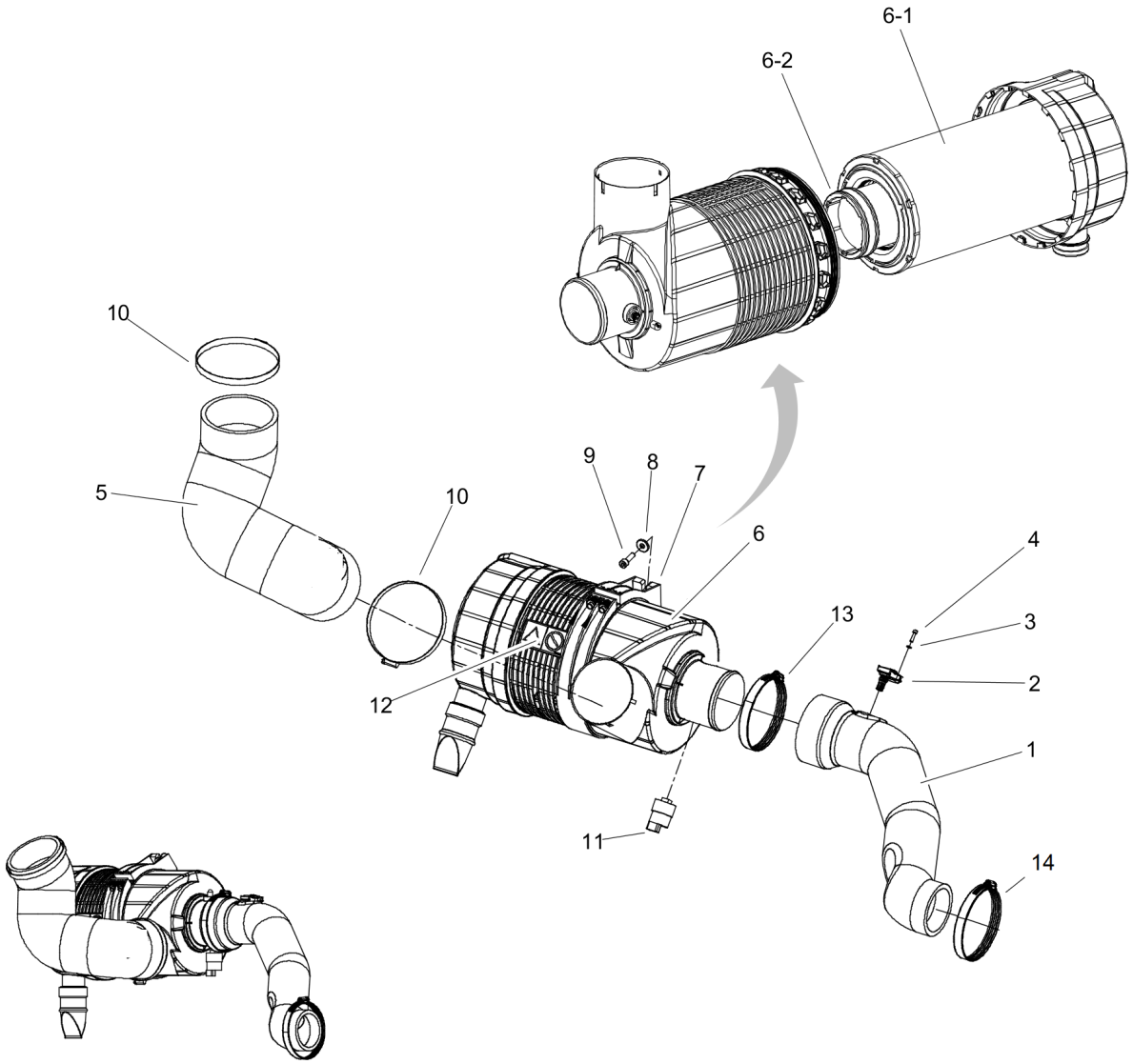

Item	Part No.	Name	Qty	L	SN INFO
1	4812126087	Air intake hose	1		
2	4812123690	Sensor	1		
3	4700904698	Plain washer	1		
4	4700508022	Hexagon socket head cap screw	1		
5	4812126086	Air intake hose	1		
6	4812126089	Air cleaner	1		
6-1	4812126206	Main filter element	1		
6-2	4812126207	Safety filter element	1		
7	4812126091	Bracket assy	1		
8	4700904640	Washer, 8.4x22x3 mm 300HV	2		
9	4700508019	Cylinder screw	2		
10	4700313105	Hose clamp	2		
11	4700904575	Indicator	1		
12	4700791642	Decal "WARNING" Use of starting fluid prohib.	1		
13	4812126188	Clamp	1		
14	4700313038	Hose clamp	1		

Engine Exhaust system module

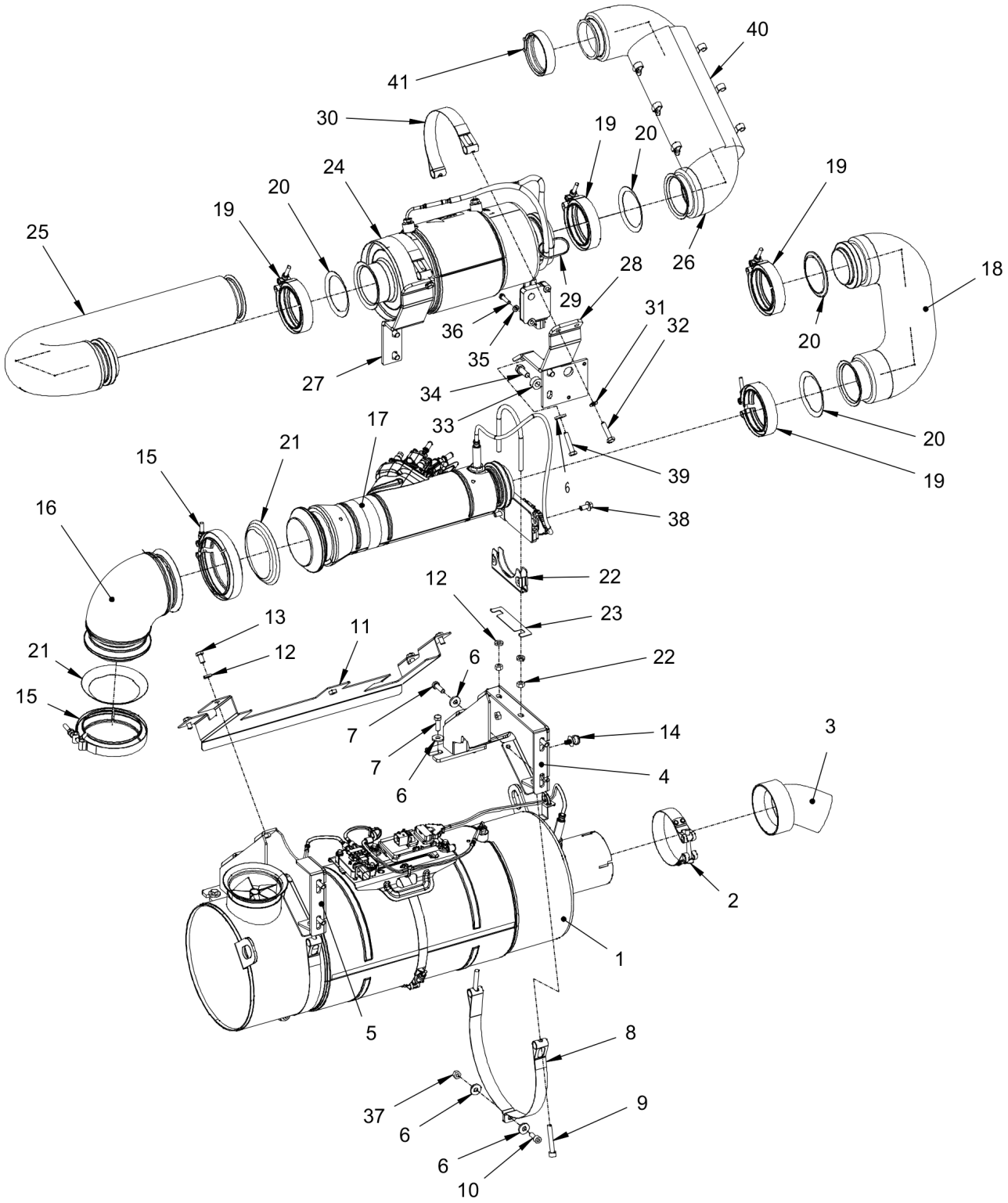

Item	Part No.	Name	Qty	L	SN INFO
1	4812124724	Catalytic converter	1		
2	4812122104	Clamp	1		
3	4812124636	Exhaust pipe	1		
4	4812123106	Bracket	1		
5	4812123107	Bracket	1		
6	4700904640	Washer, 8.4x22x3 mm 300HV	14		
7	4700947680	Hexagon head screw m	8		
8	4812125856	Clamp	4		
9	4700508058	Screw	4		
10	4700508092	Screw	2		
11	4812125825	Heat protection	1		
12	4700904556	Steel plain washer 8,4x16x3,0	6		
13	4700500019	Hexagon screw	4		
14	4700792441	Cable tie with holder	1		
15	4812121795	V-band clamp	2		
16	4812121809	Exhaust pipe	1		
17	4812122942	Mixing pipe	1		
18	4812123694	Exhaust pipe	1		
19	4812121796	V-band clamp	4		
20	4812121798	Gasket	4		
21	4812121797	Gasket	2		
22	4811000481	Pipe clamp	1		
23	4812123217	Shim	N		
24	4812123600	Diesel Oxidation Catalyst	1		
25	4812125691	Exhaust pipe	1		
26	4812125690	Exhaust pipe	1		
27	4812125824	Bracket	1		
28	4812125823	Bracket	1		
29	4700313041	Cable ties	N		
30	4812125826	Clamp	2		
31	4700904229	Washer, 8.4x 6x1.5 mm 300HV	2		
32	4700500230	Hex. screw	2		
33	4812110673	Spacer	4		
34	4700500028	Hex Head screw	4		
35	4700904228	Washer 6,4x12x1,5	2		
36	4700500075	Screw, M6-1,0x25 mm 8.8	2		
37	4700570005	Hexagon nut	2		
38	4700901832	Screw, M08x16, 8.8	2		

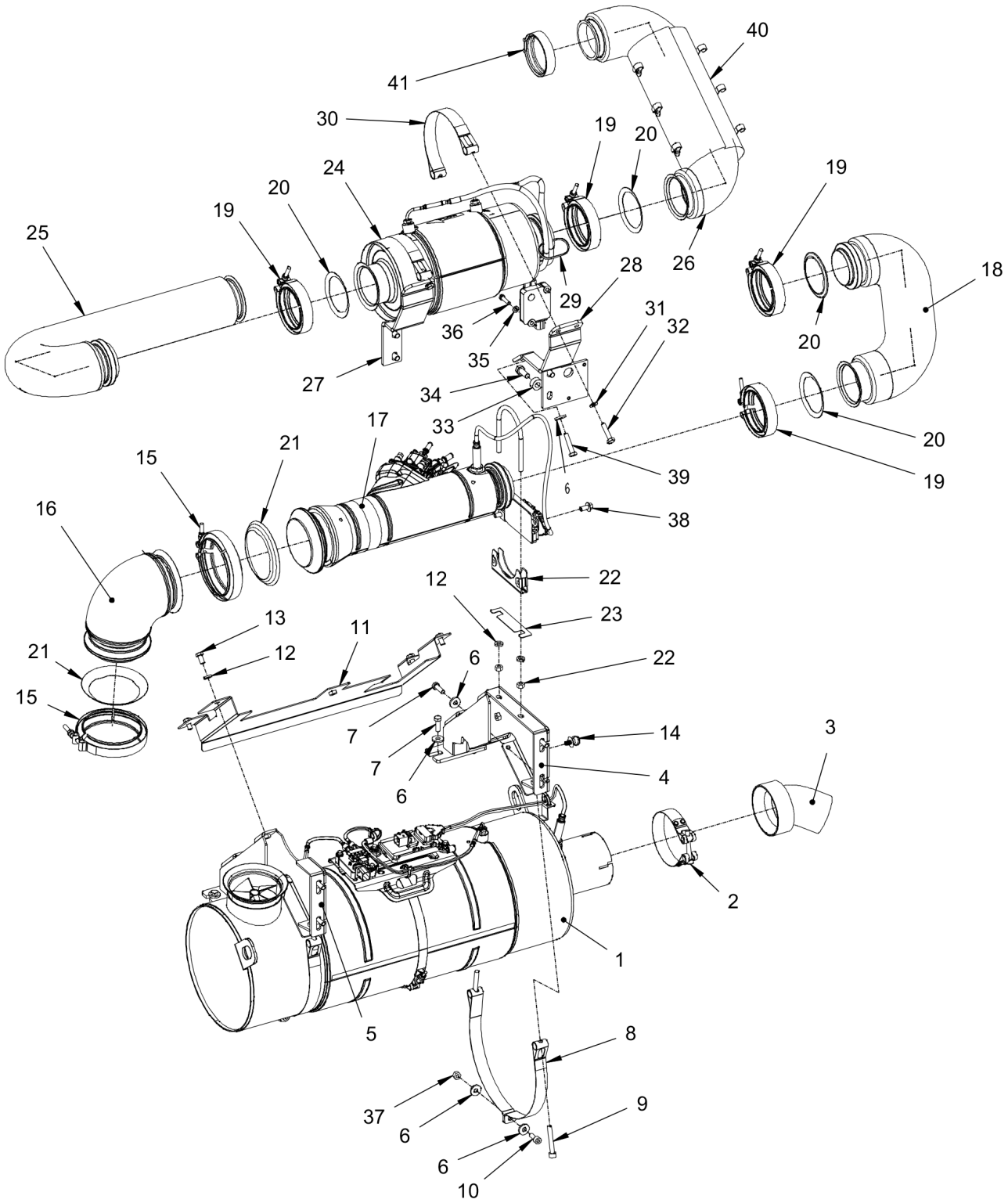
40
41
30
19
20
24
19
20
19
25
26
28
18
29
31
36
32
20
35
27
34
33
17
20
21
39
15
19
16
38
22
12
23
13
11
21
12
6
22
15
7
14
3
7
4
6
2
1
5
8
37
9
6
6
10

Item	Part No.	Name	Qty	L	SN INFO
39	4700500023	Screw, M8x40 mm 8.8 A2K	2		
40	4812126432	Insulation	1		
41	-	Delivered with engine			

Engine Cooling system

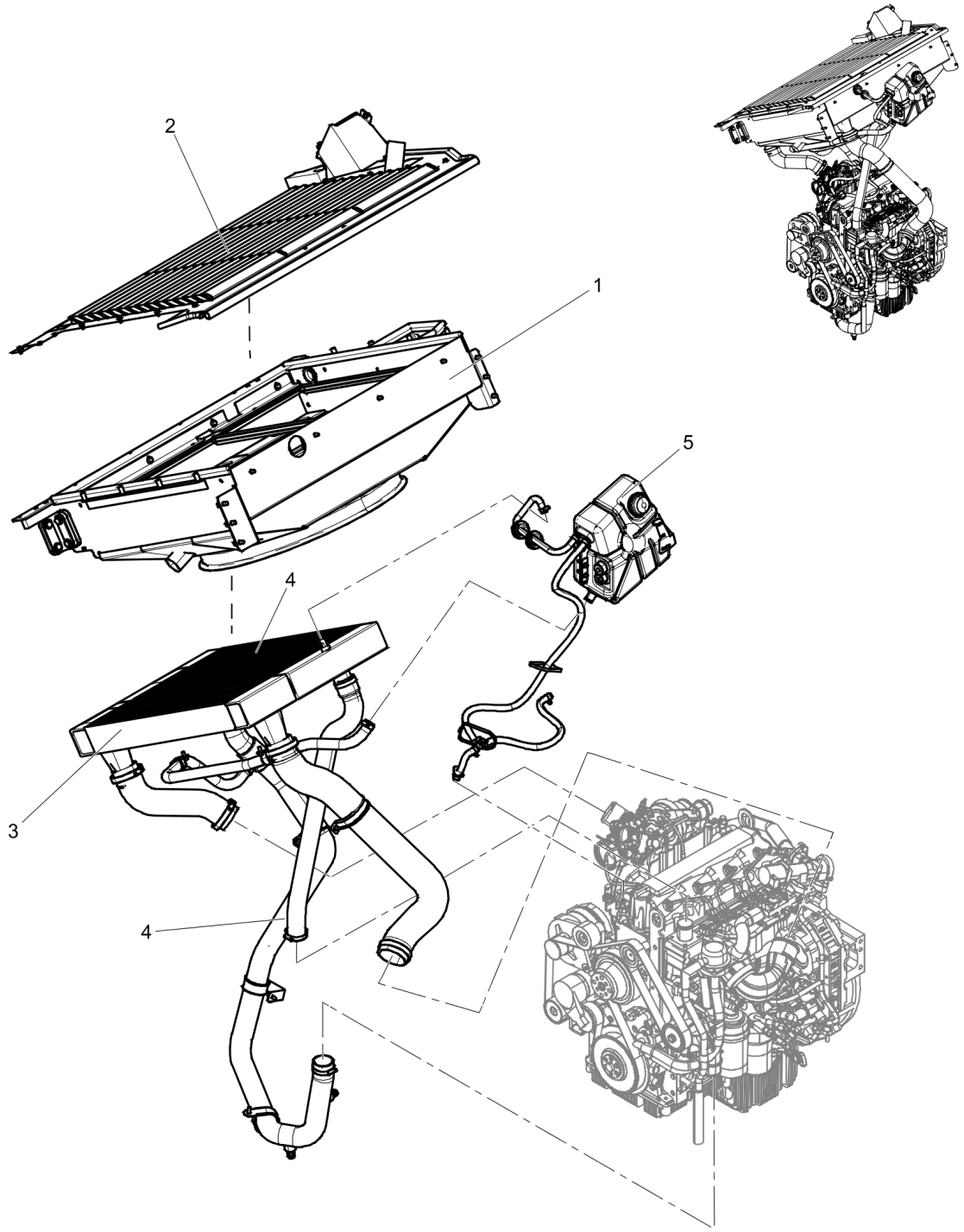

Item	Part No.	Name	Qty	L	SN INFO
1		Cooler stand module			
2		Cooling air casing			
3		Charge air cooler mounted			
4		Water cooler mounted			
5		Expansion tank module			

Engine Cooler stand module

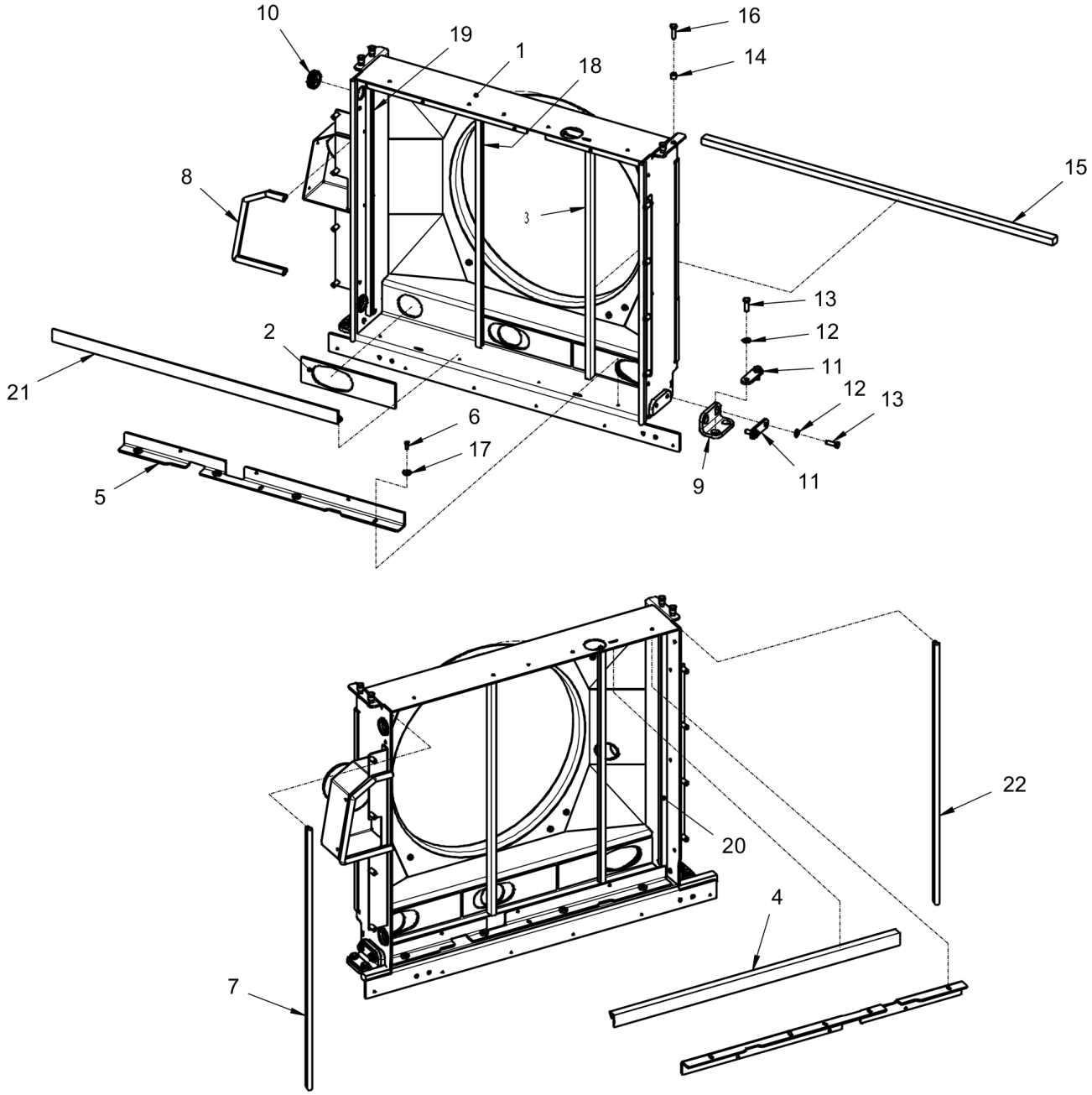

Item	Part No.	Name	Qty	L	SN INFO
1	4812126048	Cooler stand	1		
2	4812126216	Rubber cloth	6		
3	4700391299	Rubber strip	0,745		
4	4812113708	Rubber strip	0,919		
5	4812126052	Bracket	2		
6	4700500013	Screw, M6x16 mm 8.8 A2K	8		
7	4700902166	Edge trim	0,837		
8	4700288129	Rubber edge trim	0,495		
9	4812126789	Bracket	2		
10	4812119127	Grommet with membrane	2		
11	4812126788	Washer	4		
12	4700904230	Steel plain washer	8		
13	4700500029	Steel plain washer	8		
14	4700371767	Spacer	4		
15	4700791597	Rubber strip	1,13		
16	4700500030	Hexagon head screw	4		
17	4700904735	Steel plain washer	8		
18	4700391299	Rubber strip	0,745		
19	4700391299	Rubber strip	0,745		
20	4700391299	Rubber strip	0,745		
21	4812113708	Rubber strip	0,919		
22	4700902166	Edge trim	0,837		

Engine Cooling air casing

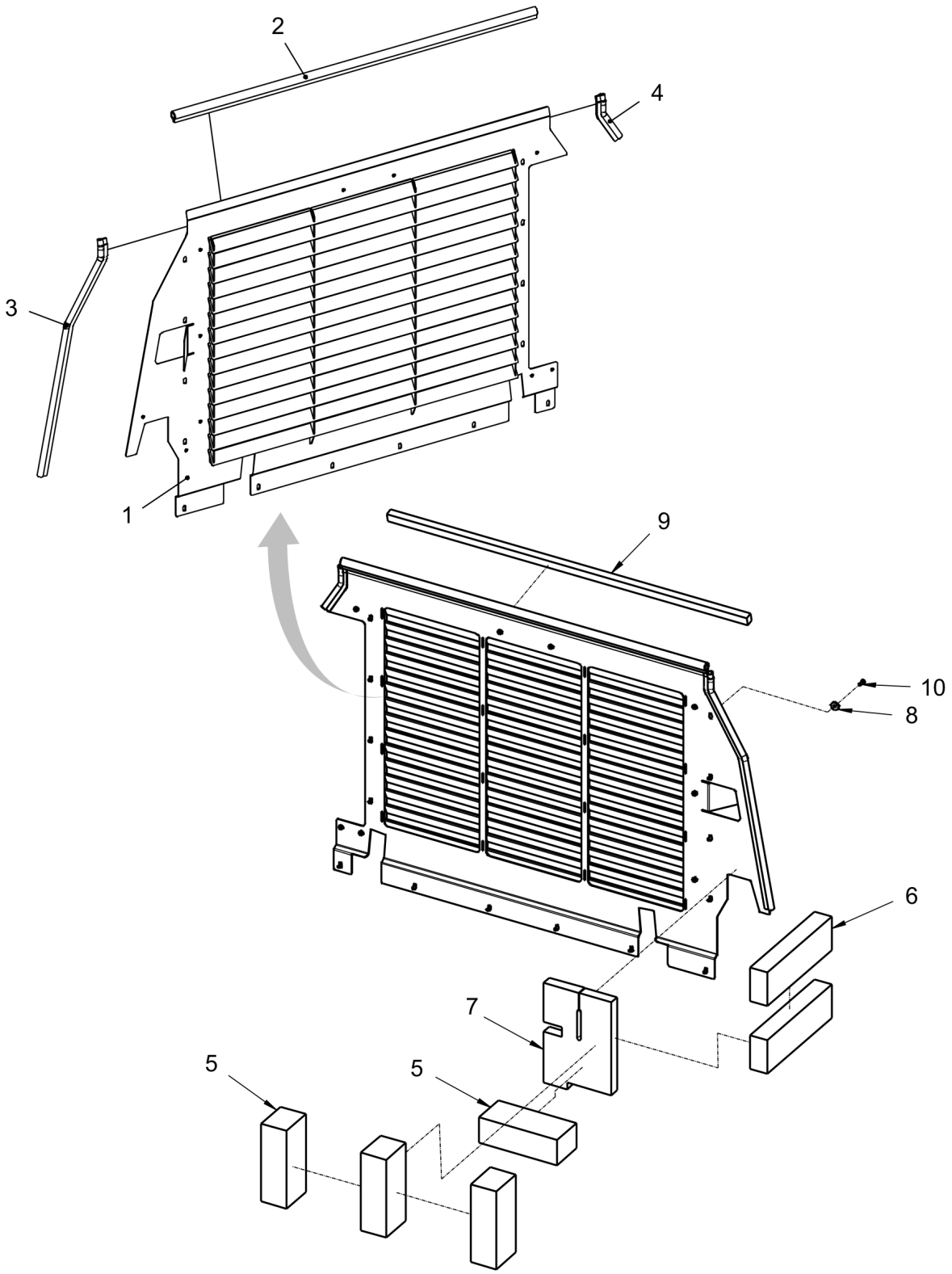

Item	Part No.	Name	Qty	L	SN INFO
1	4812126049	Cooling air casing	1		
2	4700288129	Rubber edge trim	1,076		
3	4700288129	Rubber edge trim	0,68		
4	4700288129	Rubber edge trim	0,155		
5	4812126819	Cellular rubber strip	4		
6	4812126818	Cellular rubber strip	2		
7	4812126820	Noise insulation	1		
8	4700904735	Steel plain washer	14		
9	4700791597	Rubber strip	1,07		
10	4700500013	Screw, M6x16 mm 8.8 A2K	14		

Engine Charge air cooler mounted

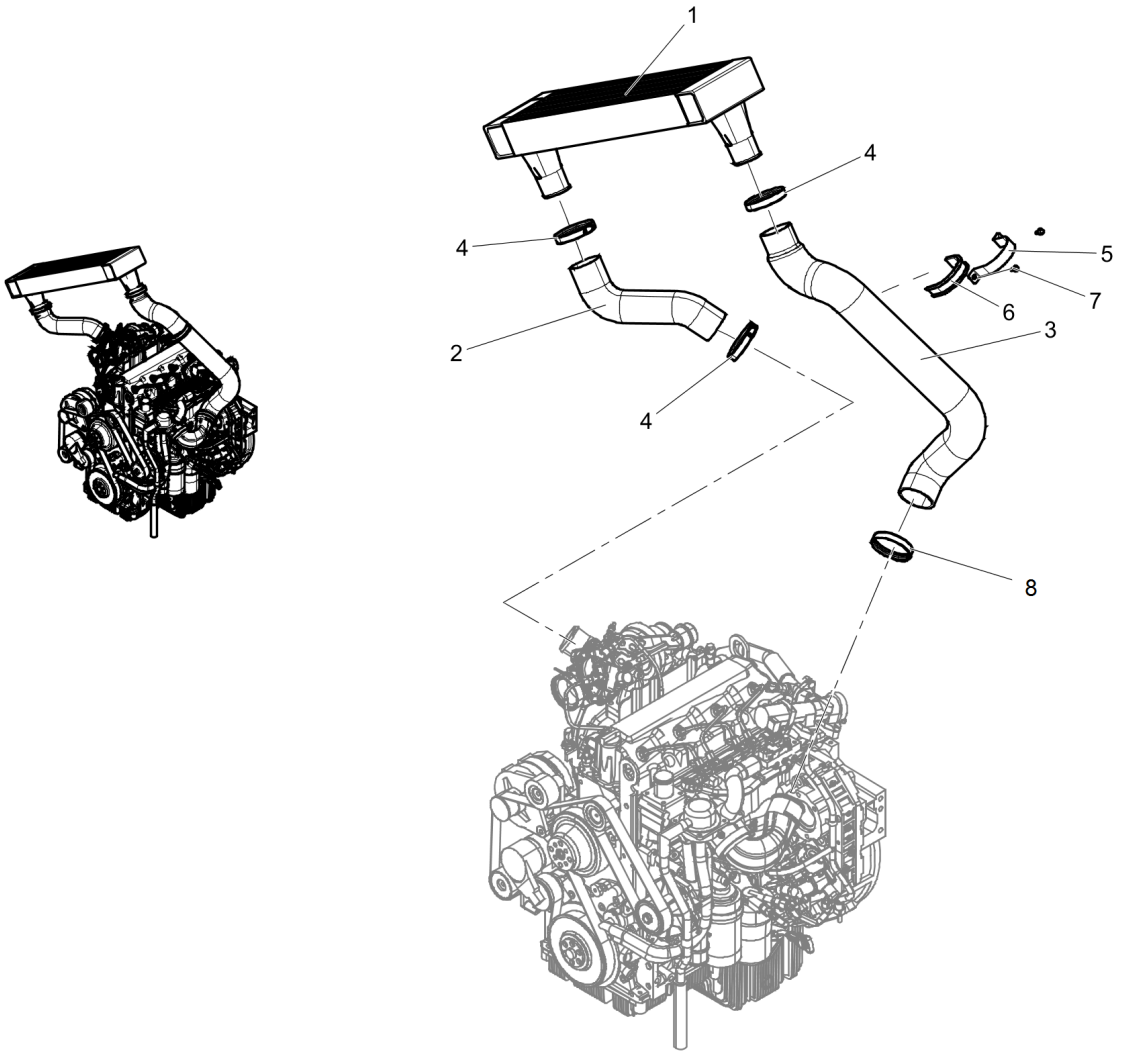

Item	Part No.	Name	Qty	L	SN INFO
1	4812126924	Charge air cooler	1		
2	4812126011	Charge air hose	1		
3	4812126010	Charge air hose	1		
4	4812126236	Clamp	3		
5	4812123214	Clamp	1		
6	4812117602	Strip	0,2		
7	4700792119	Screw, M6x16 mm 8.8 A2K	2		
8	4812126568	Clamp	1		

Engine Water cooler system

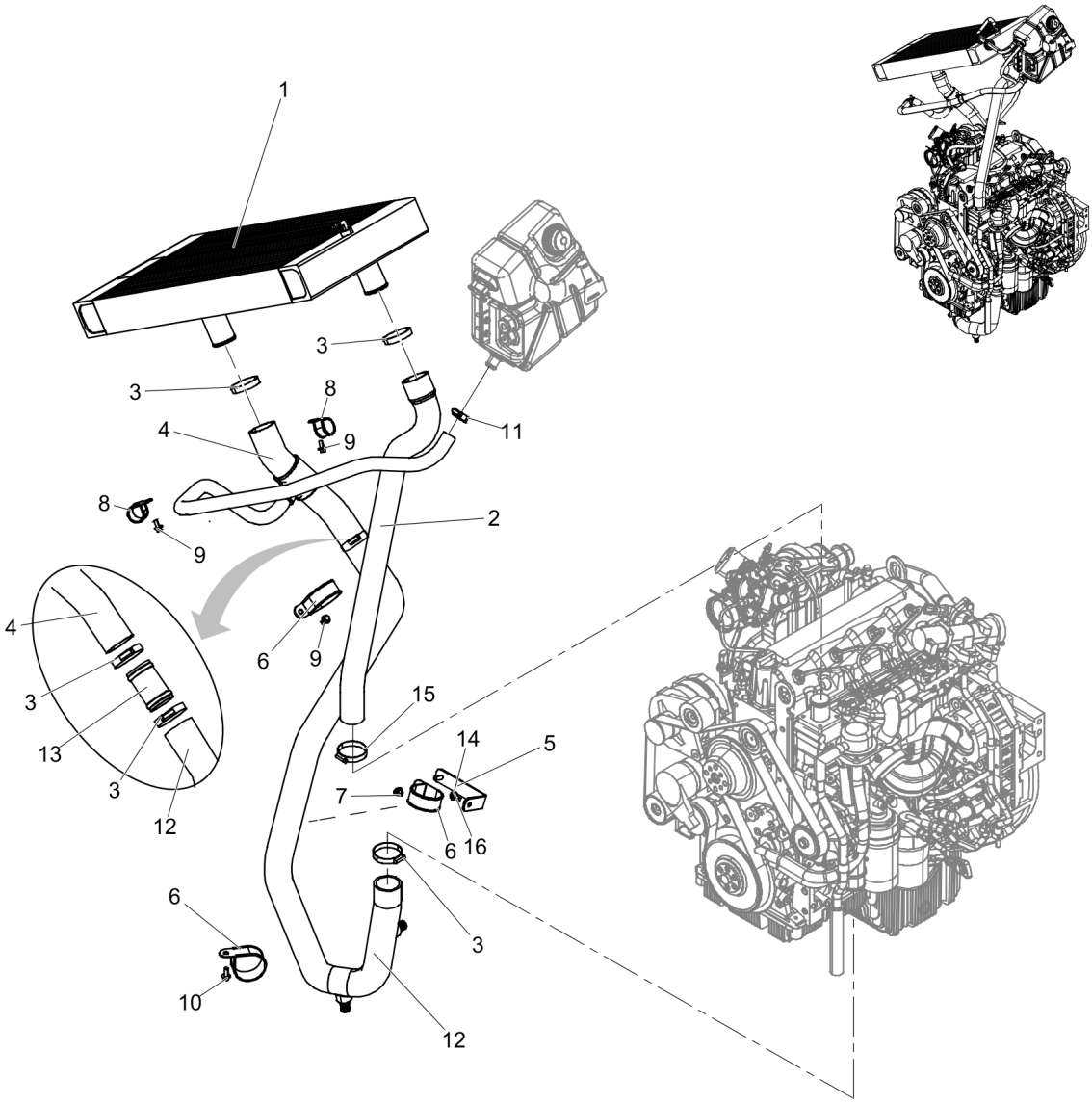

Item	Part No.	Name	Qty	L	SN INFO
1	4812126923	Water cooler	1		
2	4812125197	Coolant hose	1		
3	4700313010	Hose clamp	5		
4	4812126210	Coolant hose	1		
5	4812123216	Clamp bracket	1		
6	4700903703	Clamp	3		
7	4700902286	Lock nut, M8x1.25 mm A2K	1		
8	4700921050	Clamp	2		
9	4700901832	Screw, M08x16, 8.8	3		
10	4700500505	Screw, M8x20 mm 8.8 A2K	1		
11	4700313006	Hose clamp	1		
12	4812126916	Coolant hose	1		
13	4812126917	Pipe	1		
14	4700500035	Hexagon screw, M12x20H	1		
15	4700313009	Hose clamp	1		
16	4700904231	Washer, 13x24x2 mm 300 HV	1		

Engine Expansion tank module

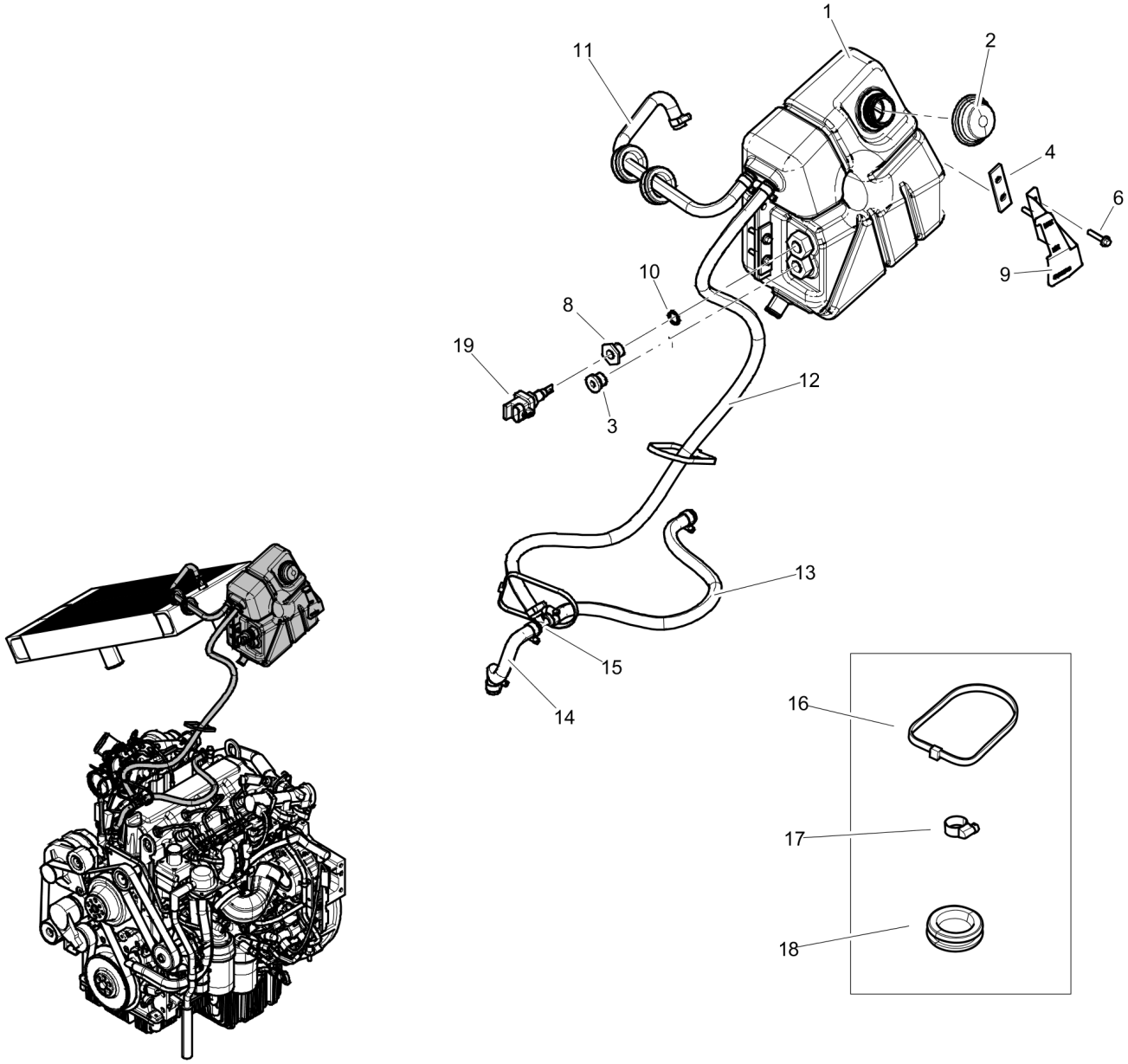

Item	Part No.	Name	Qty	L	SN INFO
1	4812117379	Expansion tank, plastic	1		
2	4700903714	Cooler cap	1		
3	4700792295	Steel plug	1		
4	4700381413	Washer	2		
6	4700500503	Screw, M6x30 mm 8.8 A2K	4		
8	4812124210	Adapter	1		
9	4812120663	Bracket	1		
10	4700160080	O-ring	1		
11	4812123738	Coolant hose	1		
12	4812122244	Coolant hose	1,0		
13	4812122244	Coolant hose	0,15		
14	4812122244	Coolant hose	0,15		
15	4700791267	Hose connection	1		
16	4700313102	Cable ties	2		
17	4700313001	Hose clamp, 11-18 x 9 mm	8		
18	4812119127	Grommet with membrane	2		
19	4812114098	Level sensor	1		

Engine Fuel system

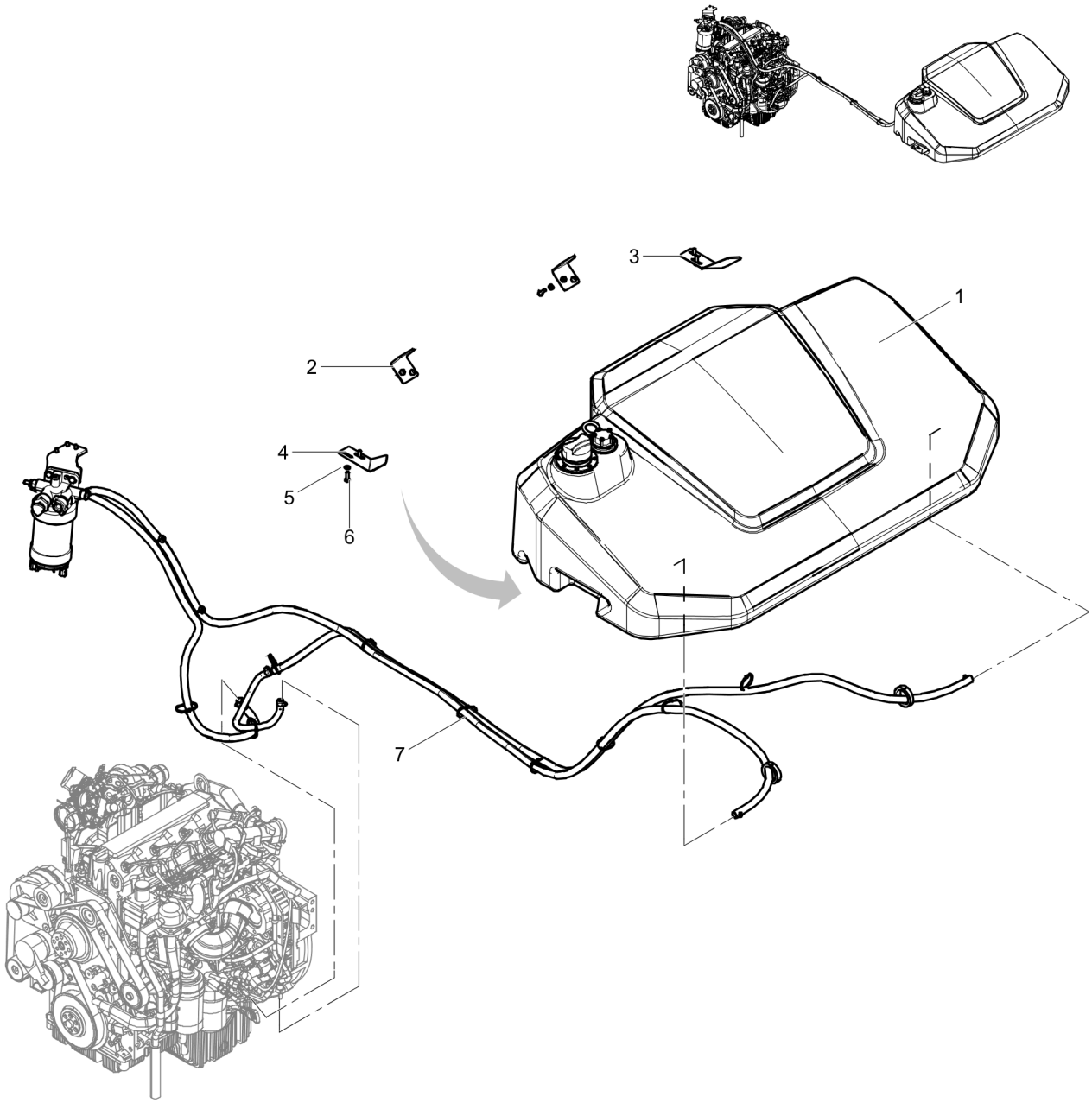

Item	Part No.	Name	Qty	L	SN INFO
1		Fuel tank module			
2	4812125241	Bracket	2		
3	4812125242	Bracket	1		
4	4812125243	Bracket	1		
5	4700904556	Steel plain washer 8,4x16x3,0	8		
6	4700500021	Screw, M8x25 mm 8.8 A2K	8		
7		Fuel hose assembly			

Engine Fuel tank module

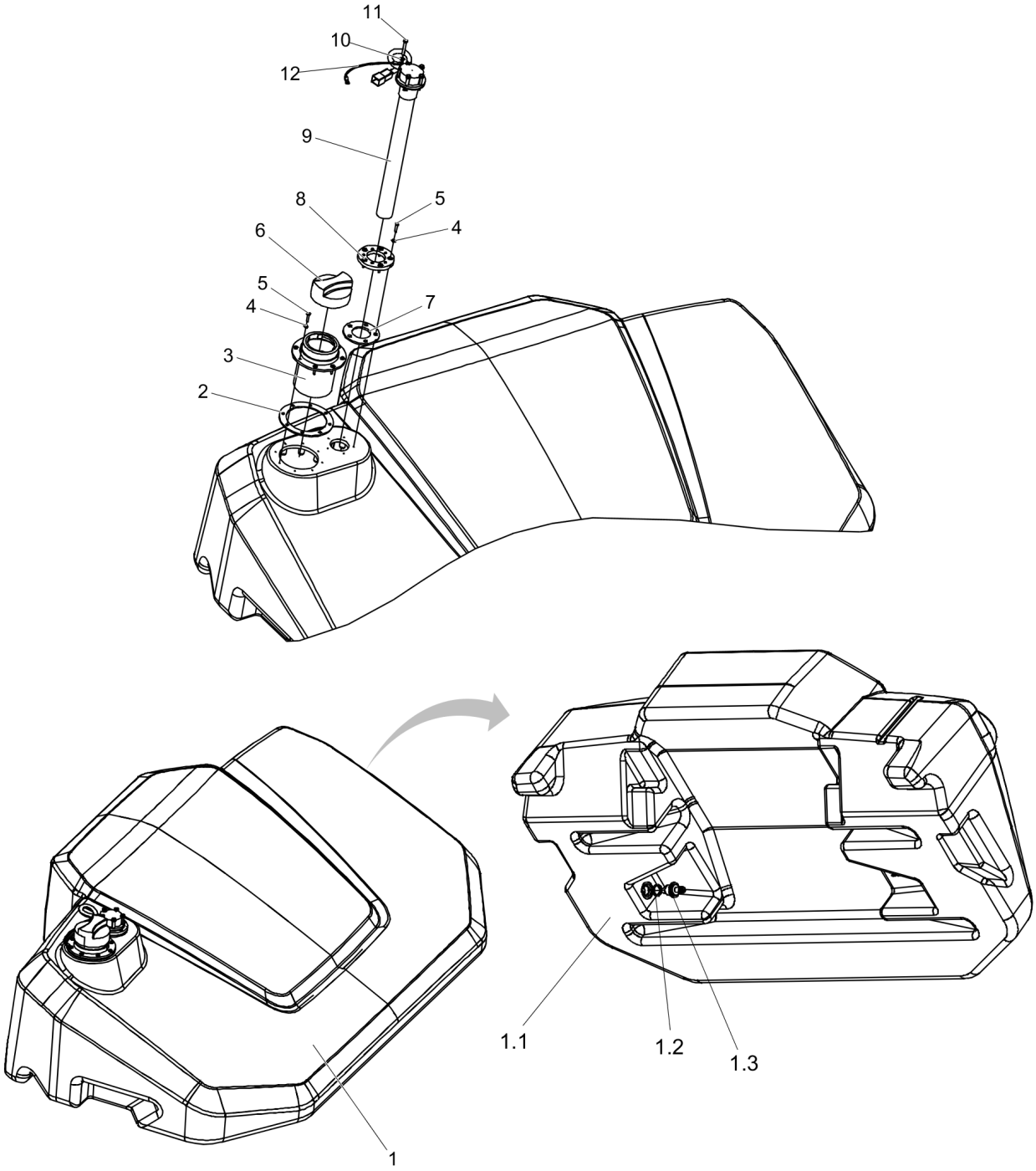

Item	Part No.	Name	Qty	L	SN INFO
1		Fuel tank assy	1		
1.1	4812125189	Fuel tank	1		
1.2	4700813443	O-ring	2		
1.3	4700396672	Hose connection, plastic	2		
2	4812123718	Gasket	1		
3	4812123711	Fuel inlet	1		
4	4700904698	Plain washer	13		
5	4700903236	Screw, Thread rolling K40x20	13		
6	4700380435	Cap	1		
7	4812114949	Gasket	1		
8	4812123717	Adapter	1		
9	4812125252	Level sensor	1		
10	4700904281	Washer, 5,3x10x1 300HV	5		
11	4700500009	Hex. screw	5		
12	4700904521	Connection cable thin	1		

Engine Fuel hose assembly

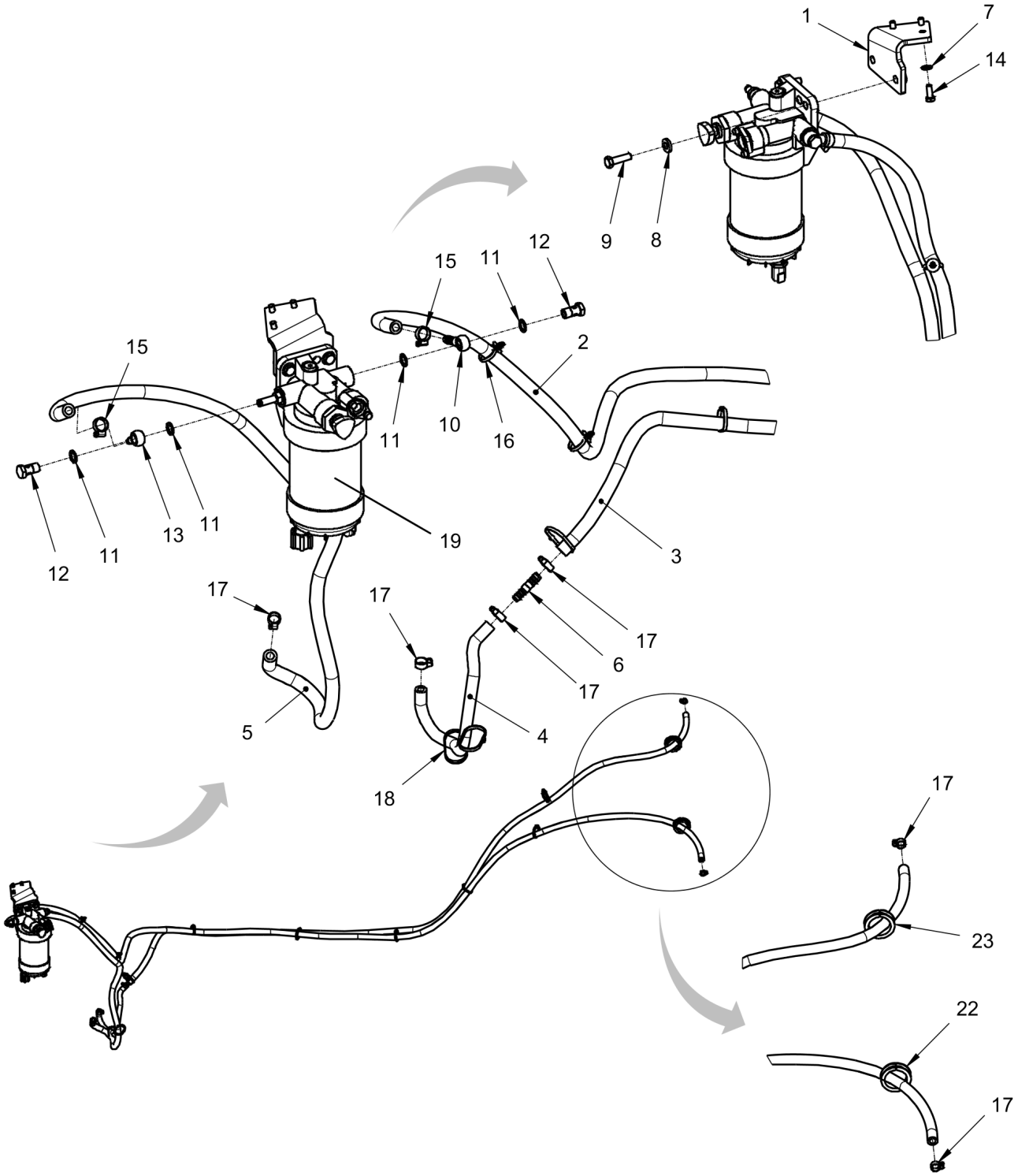

Item	Part No.	Name	Qty	L	SN INFO
1	4812125064	Bracket	1		
2	4700904986	Fuel hose, fire-resistant	3,65		
3	4700904986	Fuel hose, fire-resistant	2,6		
4	4700904985	Fuel hose, fire-resistant	0,47		
5	4700904985	Fuel hose, fire-resistant	1,5		
6	4812125645	Adapter	1		
7	4700904229	Washer, 8.4x 6x1.5 mm 300HV	3		
8	4700904557	Washer, 10.5x22x4 mm 300 HV	2		
9	4700500030	Hexagon head screw	2		
10	4812117397	Banjo coupling	1		
11	4700747282	Copper washer	4		
12	4700330171	Hollow screw, M14	2		
13	4700330170	Banjo coupling	1		
14	4700500053	Screw, M8x20 mm 8.8 A2K	3		
15	4700313002	Hose clamp	2		
16	4700792441	Cable tie with holder	2		
17	4700313001	Hose clamp, 11-18 x 9 mm	6		
18	4700313041	Cable ties	0		
19	4812160783	Fuel/Water separator filter	1		
22	4700909084	Grommet	0,155		
23	4700909084	Grommet	0,155		

Engine DEF/Urea system

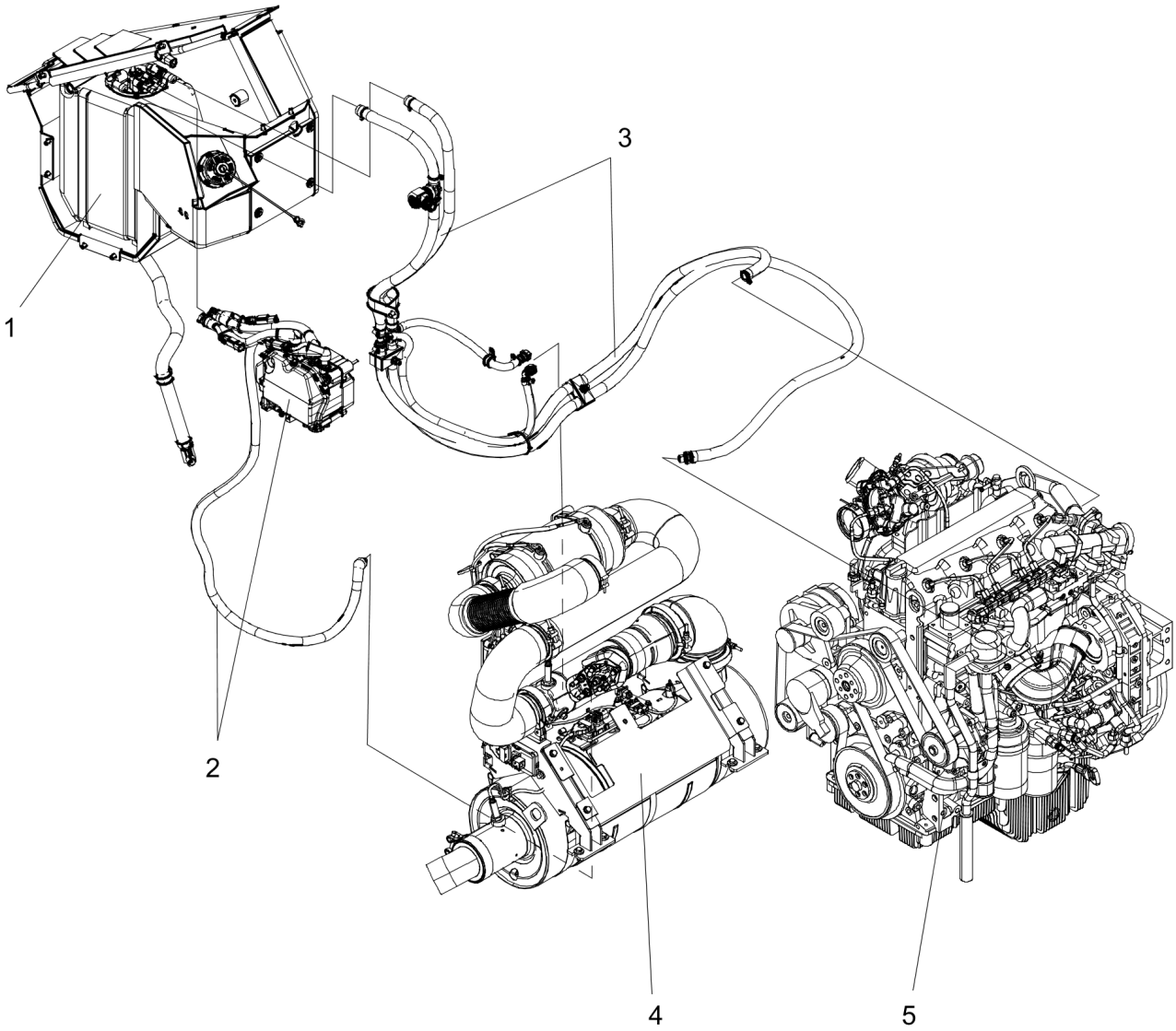

Item	Part No.	Name	Qty	L	SN INFO
1		DEF Equipment module			
2		Urea pump module			
3		Hose kit, urea			
4		Exhaust system module			
5		Diesel engine			

Engine DEF Equipment module

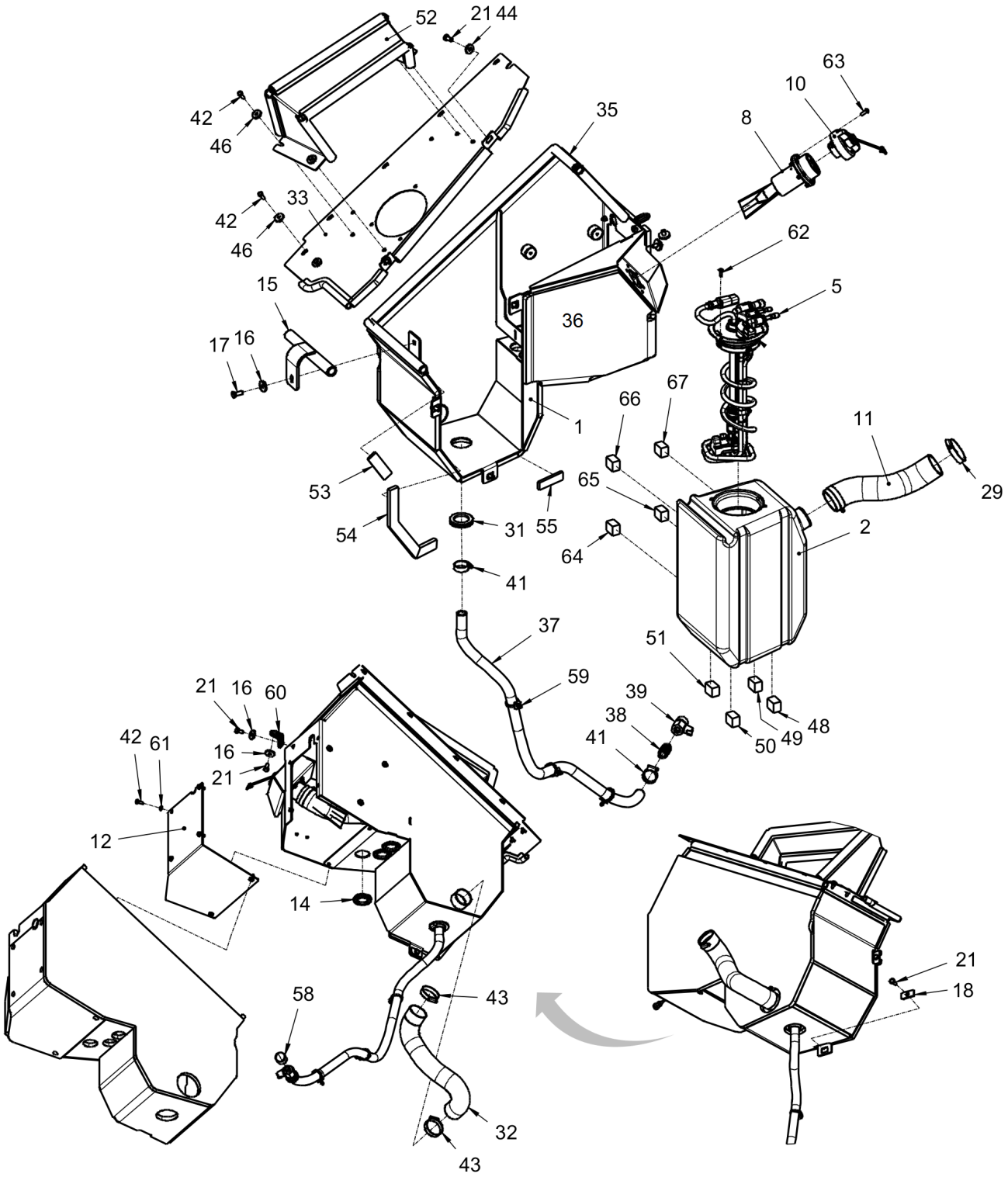

Item	Part No.	Name	Qty	L	SN INFO
1	4812125979	DEF Box	1		
2	4812123460	Tank	1		
5	4812124315	Multi function tank head unit	1		
8	4812123459	Adapter	1		
10	4812123512	Cap	1		
11	4812123529	Urea hose	1		
12	4812125980	Cover	1		
14	4812114465	Grommet with membrane	3		
15	4812125981	Bracket	1		
16	4700904734	Washer, 8.4x26x4 mm 300 HV	3		
17	4700500053	Screw, M8x20 mm 8.8 A2K	1		
18	4812126705	Washer	3		
21	4700500019	Hexagon screw	7		
29	4700313010	Hose clamp	2		
31	4700928513	Grommet with membrane	1		
32	4812126062	Aluminium flex tube	1		
33	4812126327	Cover	1		
35	4700288129	Rubber edge trim	14X L		
36	4812126235	Heat protection, Kit	1		
37	4812122243	Coolant hose	0,93		
38	4700903885	Adapter, plastic	1		
39	4700924986	Valve	1		
41	4700313006	Hose clamp	2		
42	4700500013	Screw, M6x16 mm 8.8 A2K	12		
43	4700313009	Hose clamp	2		
44	4700904640	Washer, 8.4x22x3 mm 300HV	2		
46	4700904735	Steel plain washer	6		
47	-	Aluminium tape	N		
48	4700202042	Rubber strip	0,03		
49	4700202042	Rubber strip	0,03		
50	4700202042	Rubber strip	0,03		
51	4700202042	Rubber strip	0,03		
52	4812126429	Cover	1		
53	4700791597	Rubber strip	0,08		
54	4700791597	Rubber strip	0,29		
55	4700791597	Rubber strip	0,07		
58	4700331109	Cap	1		

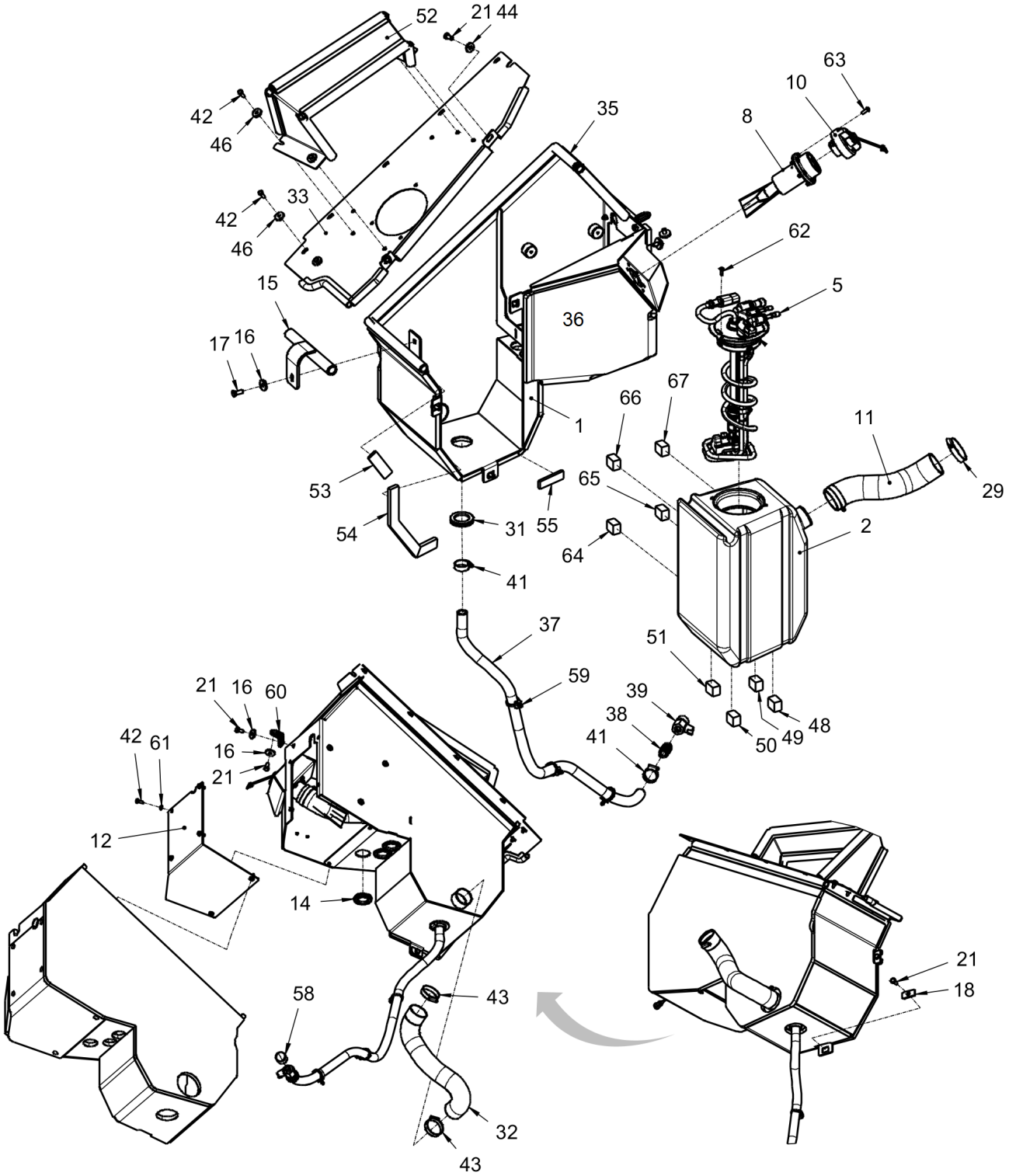
52
21
44
63
10
8
35
42
46
33
42
46
62
5
15
36
17
16
67
66
1
11
29
53
65
55
54
31
2
64
41
37
51
59
21
16
60
39
38
41
48
49
50
42
61
16
21
12
14
21
18
58
43
32
43

Item	Part No.	Name	Qty	L	SN INFO
59	4700792441	Cable tie with holder	3		
60	4812126909	Bracket	1		
61	4700904228	Washer 6,4x12x1,5	6		
62	4700904653	Screw M5x16 A2-70	2		
63	4700904206	Screw, M6x16 mm	6		
64	4700202042	Rubber strip	0,03		
65	4700202042	Rubber strip	0,03		
66	4700202042	Rubber strip	0,03		
67	4700202042	Rubber strip	0,03		

Engine Urea pump module

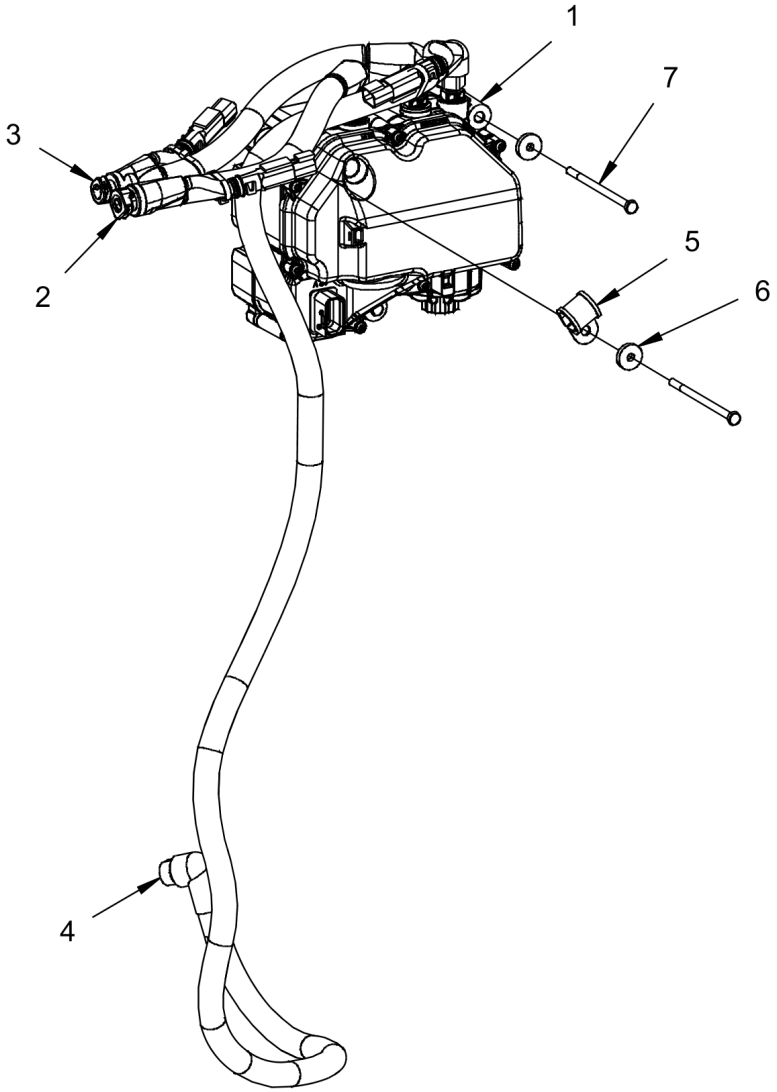

Item	Part No.	Name	Qty	L	SN INFO
1	4812121808	Urea pump	1		
2	4812122657	Hose	1		
3	4812122658	Hose	1		
4	4812122659	Hose	1		
5	4700921116	Clamp	1		
6	4700904735	Steel plain washer	3		
7	4700500169	Screw	3		

Engine Hose kit, urea

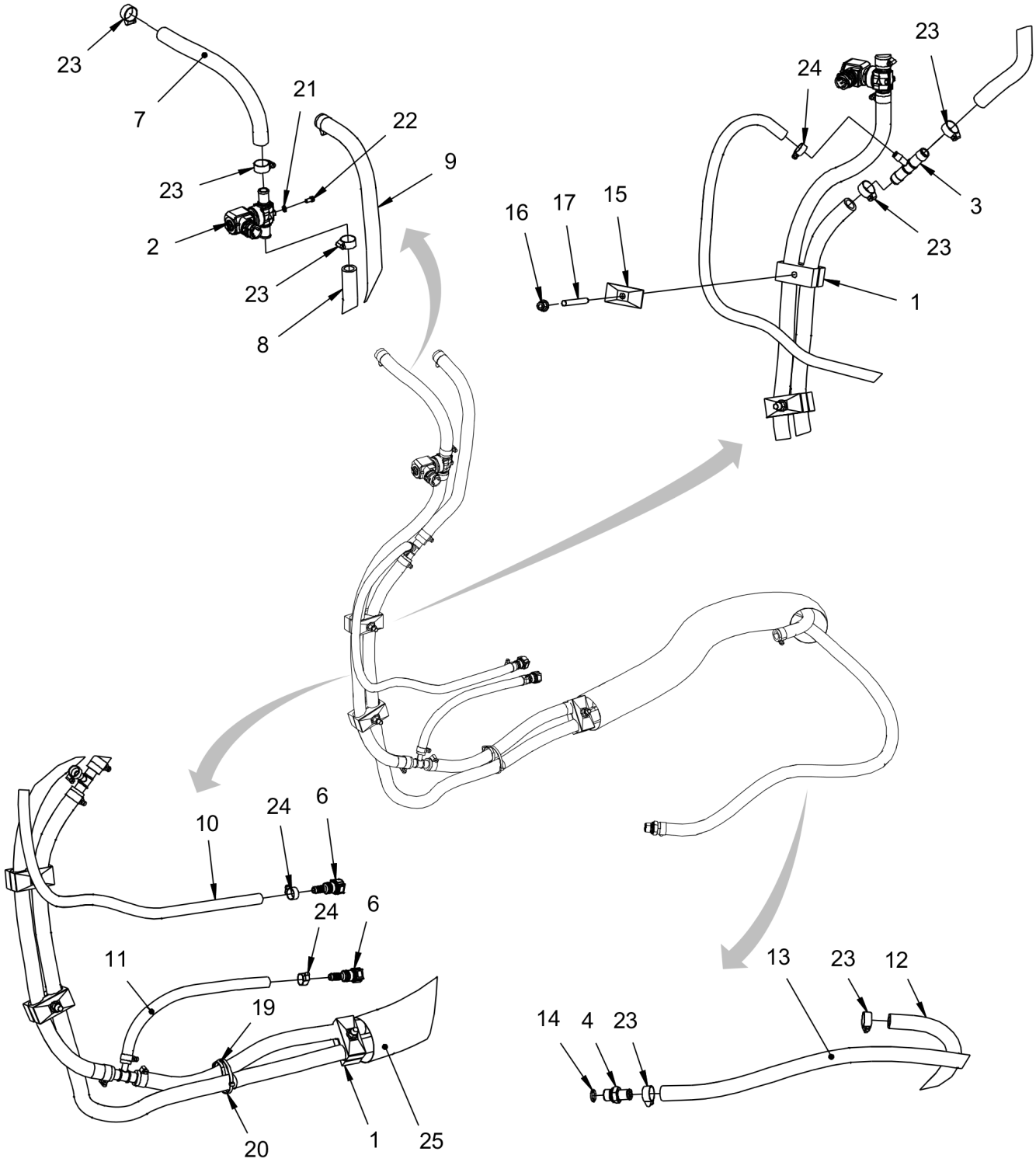

Item	Part No.	Name	Qty	L	SN INFO
1	4700287295	Clamp	3		
2	4812121747	Shut off valve	1		
3	4812124167	T-adapter	2		
4	4812122146	Hose connection	1		
6	4812122213	Quick coupling	2		
7	4812122243	Coolant hose	0,28		
8	4812122243	Coolant hose	0,78		
9	4812122243	Coolant hose	0,48		
10	4812122244	Coolant hose	0,78		
11	4812122244	Coolant hose	0,32		
12	4812122243	Coolant hose	1,20		
13	4812122243	Coolant hose	2,75		
14	4700160080	O-ring	1		
15	4700904872	Cover plate	3		
16	4700902286	Lock nut, M8x1.25 mm A2K	3		
17	4700791805	Stud	3		
19	4700792441	Cable tie with holder	1		
20	4700792609	Cable ties	1		
21	4700904281	Washer, 5,3x10x1 300HV	2		
22	4700500003	Hex. screw	2		
23	4700313003	Hose clamp	10		
24	4700313001	Hose clamp, 11-18 x 9 mm	4		
25	4700397609	Hose guard	1		

Engine hoods - white Engine hoods

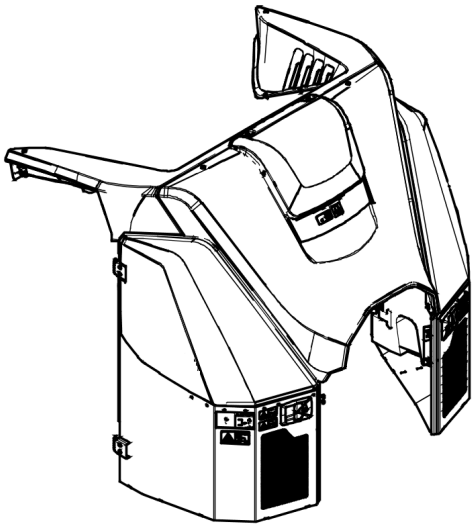

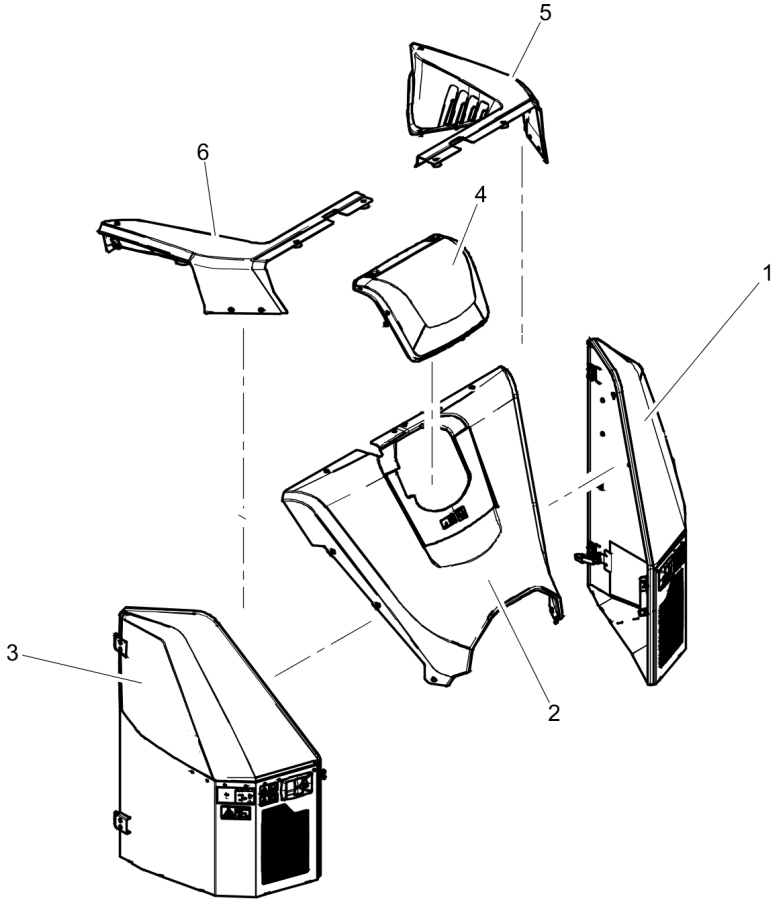

Item	Part No.	Name	Qty	L	SN INFO
1	-	Engine hood module left			
2	-	Engine hood module center			
3	-	Engine hood module right			
4	-	Expansion tank cover module			
5	-	Rear frame cover module, left			
6	-	Rear fram cover module, right			

Engine hoods - white Engine hood module right

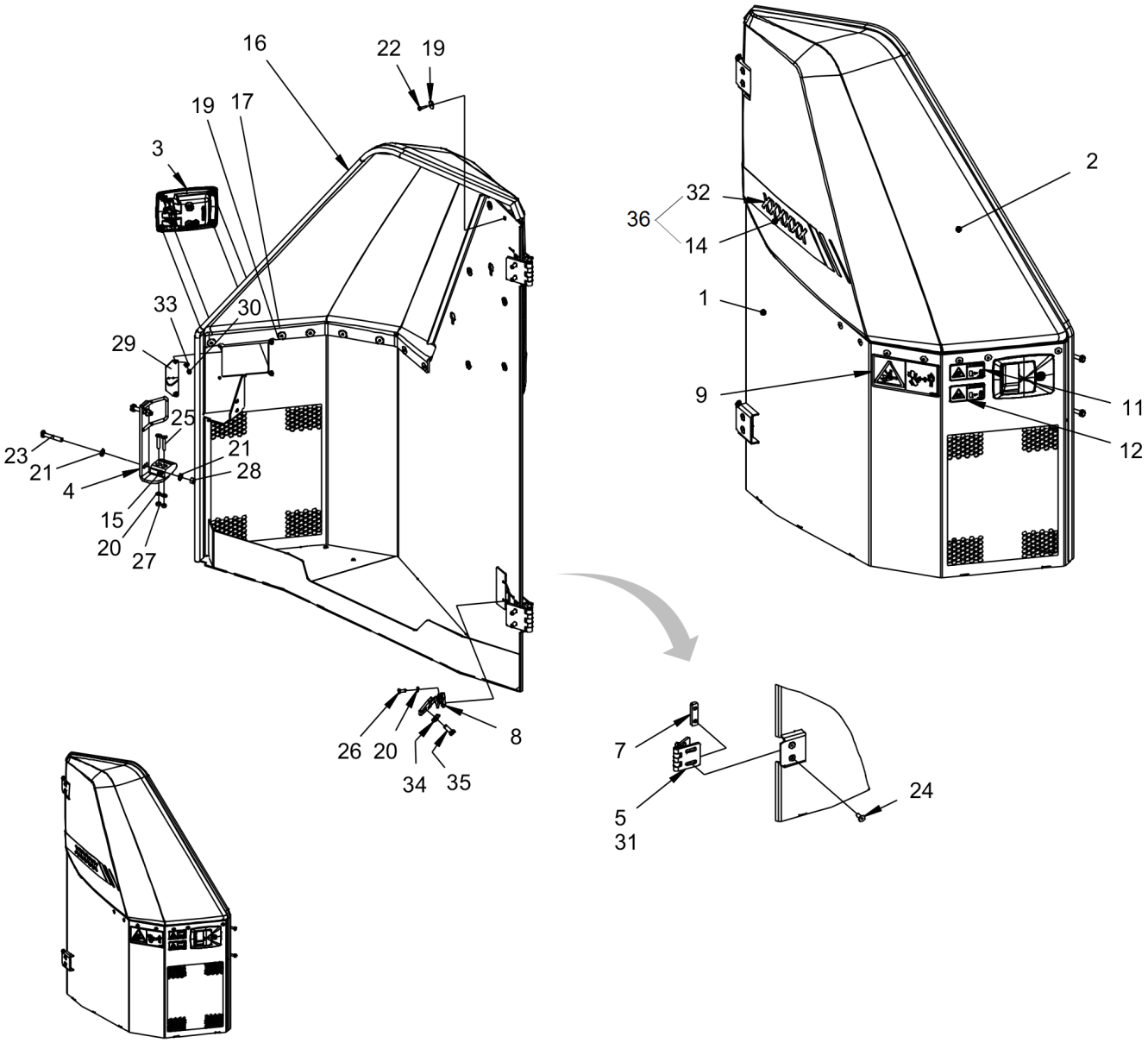

Item	Part No.	Name	Qty	L	SN INFO
1	4812124283	Enginge hood right	1		
2	4812128217	Engine hood	1		
3	4812127006	Lock	1		
4	4812126135	Lock shackle	1		
5	4812125785	Hinge	2		
6	4812125781	Bracket	2		
7	4812125783	Bracket	2		
8	4812114393	Hood latch	1		
9	4700903422	Safety decal "CRUSH AREA"	1		
11	4700903423	Safety label, Rotating engine components	1		
12	4700903424	Safety label, hot surfaces	1		
14		Decal "GRAPHIC ELEMENT" Right version	1		
15	4700390365	Spacer	1		
16	4700902166	Edge trim	1,9		
17	4700902569	Rivet	7		
19	4700927974	Washer, 5x19x1 mm	13		
20	4700904228	Washer 6,4x12x1,5	3		
21	4700904229	Washer, 8.4x 6x1.5 mm 300HV	4		
22	4812110748	Thread forming screw	6		
23	4700500025	Screw, M8x50 mm 8.8 A2K	2		
24	4700513003	Screw	8		
25	4700924875	Screw	2		
26	4700500012	Hex. screw	1		
27	4700570004	Hexagon nut M6	2		
28	4700570005	Hexagon nut	2		
29	4812126961	Bracket	1		
30	4700586001	Lock nut	4		
31	4700904663	Lube grease " DYNAPAC special approved "	0		
32	-	Decal "MODEL CODE	1		
33	4700904281	Washer, 5,3x10x1 300HV	4		
34	4700904640	Washer, 8.4x22x3 mm 300HV	1		
35	4700500053	Screw, M8x20 mm 8.8 A2K	1		
36	4812128503	Decal model code combined, right CC4000 VI (right side)	1		
36	4812128507	Decal model code combined, right CC4200 VI (right side)	1		
36	4812128511	Decal model code combined, right CC5200 VI (right side)	1		
36	4812128515	Decal model code combined, right CC6200 VI (right side)	1		

Engine hoods - white Engine hood module left

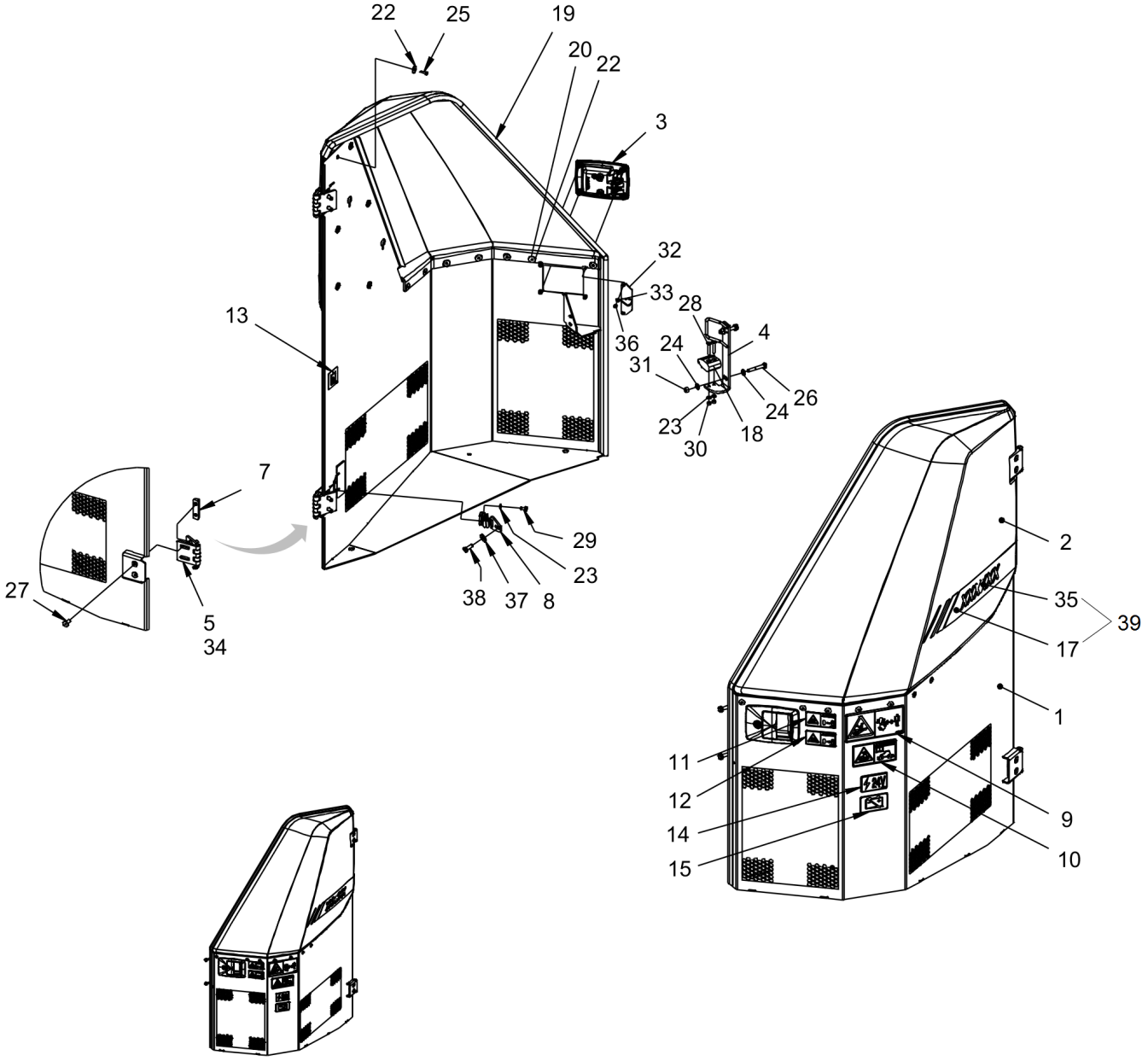

Item	Part No.	Name	Qty	L	SN INFO
1	4812124282	Engine hood left	1		
2	4812128216	Engine hood	1		
3	4812127006	Lock	1		
4	4812126136	Lock shackle	1		
5	4812125785	Hinge	2		
6	4812125781	Bracket	2		
7	4812125783	Bracket	2		
8	4812114393	Hood latch	1		
9	4700903422	Safety decal "CRUSH AREA"	1		
10	4700904895	Safety decal "Brake release"	1		
11	4700903423	Safety label, Rotating engine components	1		
12	4700903424	Safety label, hot surfaces	1		
13	4700272372	Decal "HYDRAULIC OIL"	1		
14	4700393959	Decal "Battery voltage 24V"	1		
15	4700904835	Decal "BATTERY POWER"	1		
17		Decal "GRAPHIC ELEMENT" Left version	1		
18	4700390365	Spacer	1		
19	4700902166	Edge trim	1,9		
20	4700902569	Rivet	7		
22	4700927974	Washer, 5x19x1 mm	13		
23	4700904228	Washer 6,4x12x1,5	3		
24	4700904229	Washer, 8.4x 6x1.5 mm 300HV	4		
25	4812110748	Thread forming screw	6		
26	4700500025	Screw, M8x50 mm 8.8 A2K	2		
27	4700513003	Screw	8		
28	4700924875	Screw	2		
29	4700500012	Hex. screw	1		
30	4700570004	Hexagon nut M6	2		
31	4700570005	Hexagon nut	2		
32	4812126961	Bracket	1		
33	4700586001	Lock nut	4		
34	4700904663	Lube grease " DYNAPAC special approved "	0		
35	-	Decal "MODEL CODE"	1		
36	4700904281	Washer, 5,3x10x1 300HV	4		
37	4700904640	Washer, 8.4x22x3 mm 300HV	1		
38	4700500053	Screw, M8x20 mm 8.8 A2K	1		
39	4812128502	Decal model code combined, left CC4000 VI (left side)			
39	4812128506	Decal model code combined, left CC4200 VI (left side)			

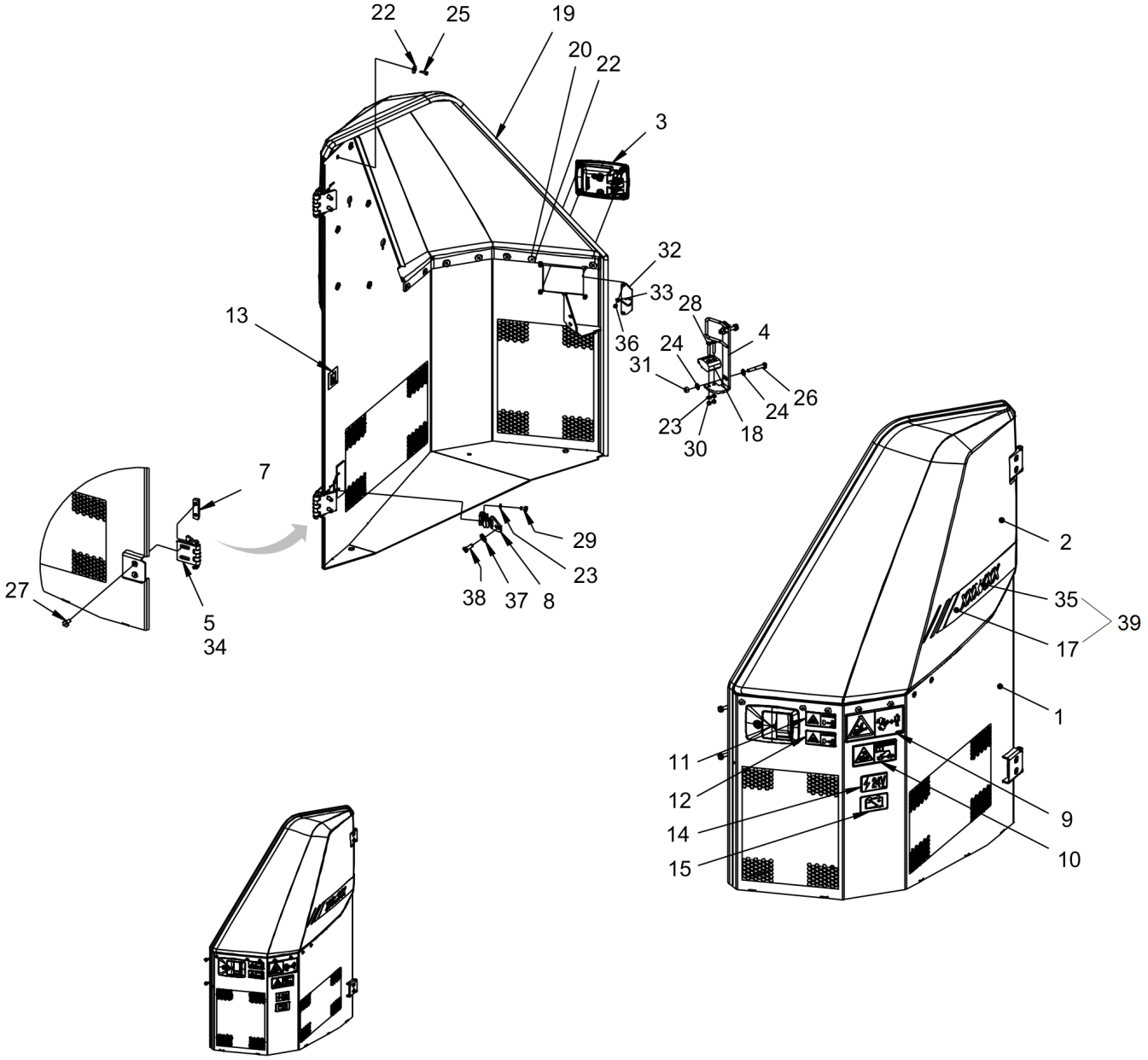
22
25
19
20
22
3
32
33
28
4
13
36
24
31
26
24
23
18
30
7
29
23
27
38
37
8
5
34
2
35
39
17
1
11
12
14
15
9
10

Item	Part No.	Name	Qty	L	SN INFO
39	4812128510	Decal model code combined, left CC5200 VI (left side)			
39	4812128514	Decal model code combined, left CC6200 VI (left side)			

Engine hoods - white Engine hood module center

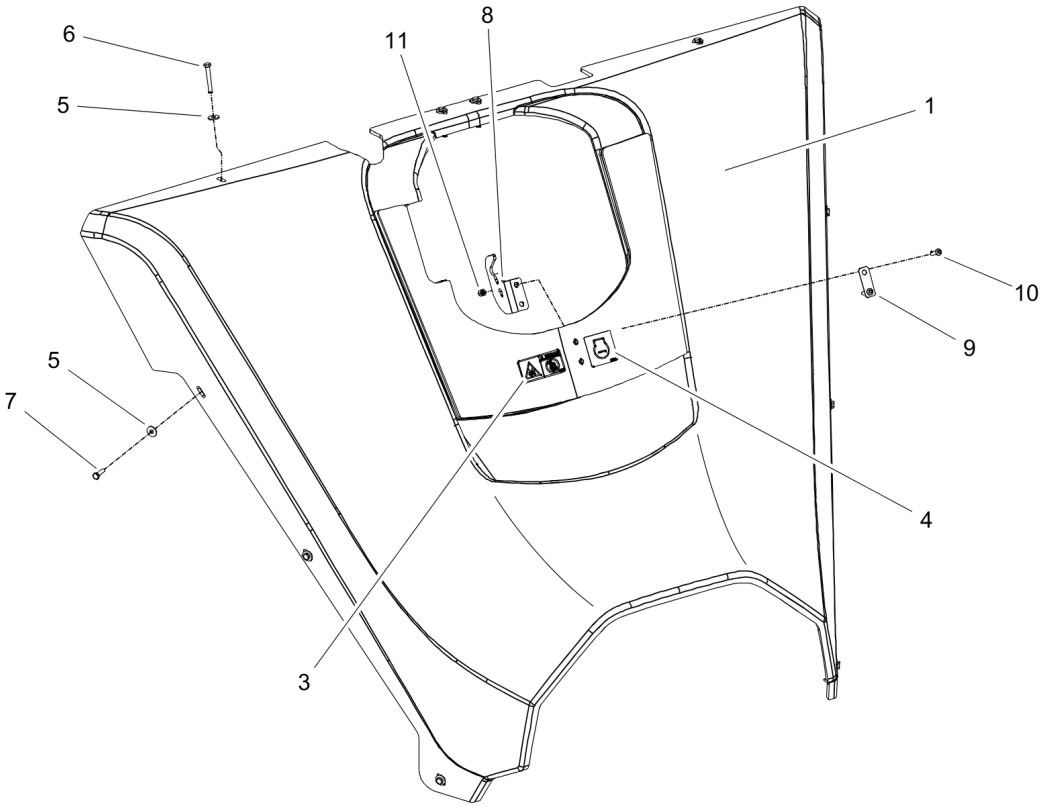

Item	Part No.	Name	Qty	L	SN INFO
1	4812128218	Engine hood, center	1		
3	4700791642	Decal "WARNING" Use of starting fluid prohib.	1		
4	4700388449	Decal "ENGINE COOLANT FILL"	1		
5	4700928381	Washer, 6.4x18x1.6 mm	10		
6	4812127061	Hexagon head screw, M6x45H mm	4		
7	4812127060	Hexagon head screw, M6x20H mm	6		
8	4812126709	Bracket	1		
9	4812126824	Washer	1		
10	4700791171	Screw	2		
11	4700586002	Lock nut M6 -8	2		

Engine hoods - white Rear frame cover module, right

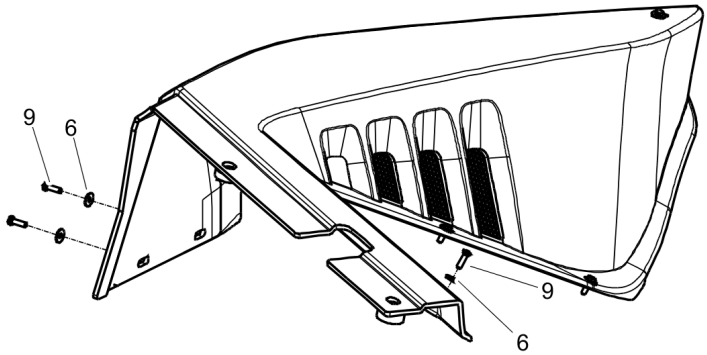

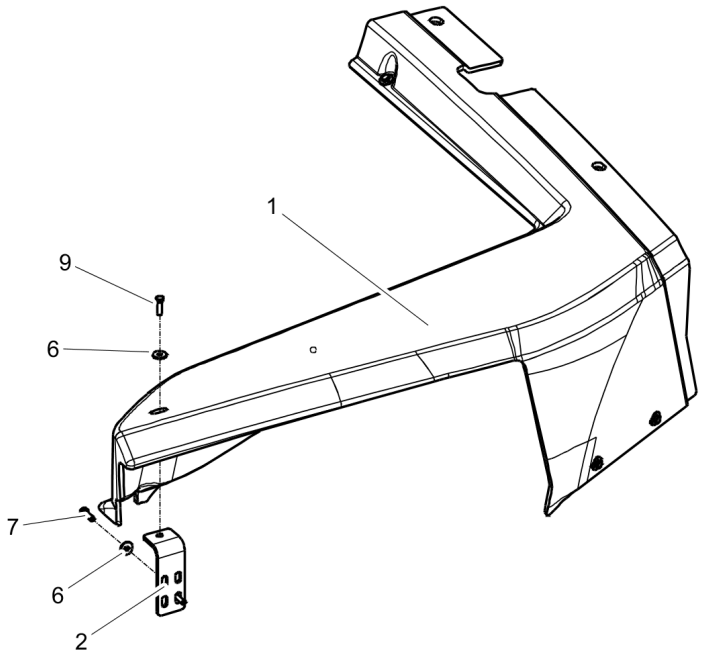

Item	Part No.	Name	Qty	L	SN INFO
1	4812128220	Rear frame cover, right	1		
2	4812124641	Bracket	1		
6	4700928381	Washer, 6.4x18x1.6 mm	9		
7	4700500040	Screw, M6x20 mm 8.8 A2K	2		
9	4812127060	Hexagon head screw, M6x20H mm	7		

Engine hoods - white Rear frame cover module, left

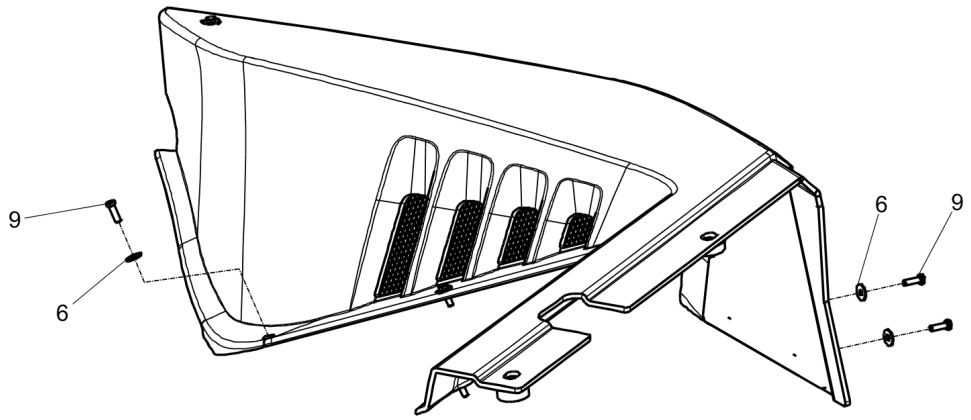

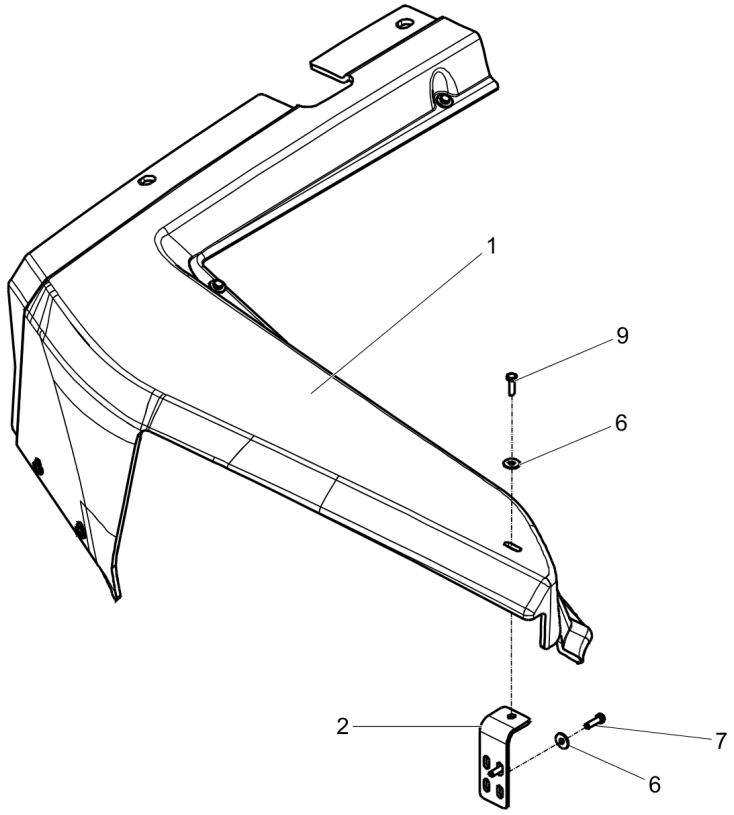

Item	Part No.	Name	Qty	L	SN INFO
1	4812128219	Rear frame cover, left	1		
2	4812124641	Bracket	1		
6	4700928381	Washer, 6.4x18x1.6 mm	9		
7	4700500040	Screw, M6x20 mm 8.8 A2K	2		
9	4812127060	Hexagon head screw, M6x20H mm	7		

Engine hoods - white Expansion tank cover module

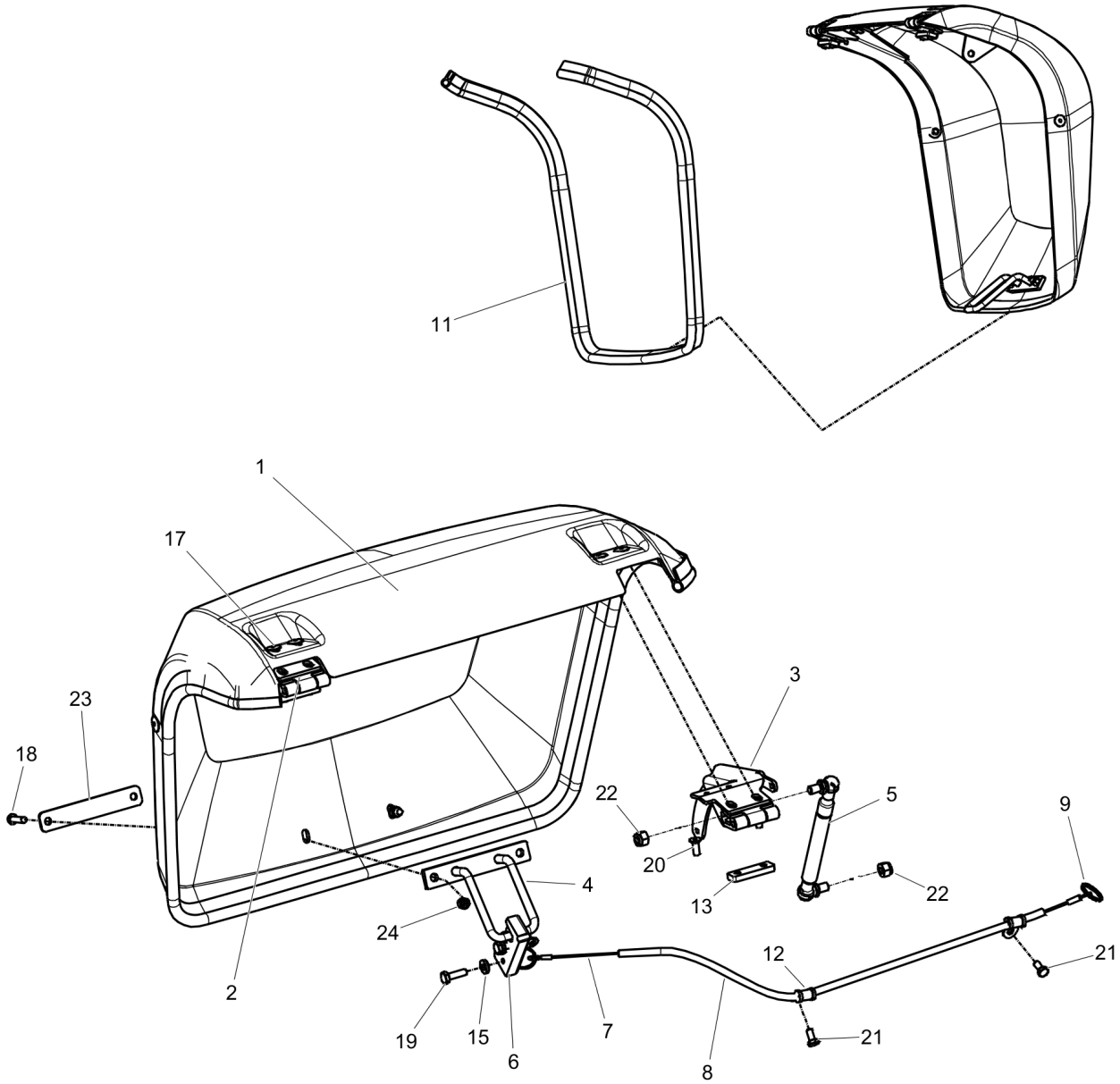

Item	Part No.	Name	Qty	L	SN INFO
1	4812124586	Expansion tank cover	1		
2	4812126935	Bracket	1		
3	4812126936	Bracket	1		
4	4812126937	Lock shackle	1		
5	4812119988	Gas spring	1		
6	4812125170	Lock latsch	1		
7	4700357643	Wire	1		
8	4700902173	Conduit	0,48		
9	4700358254	Key-ring	2		
11	4700902166	Edge trim	1,46		
12	4700791388	Clamp	2		
13	4812124665	Plate	2		
15	4700603001	Washer	2		
17	4700792325	Blind rivet	6		
18	4700791171	Screw	2		
19	4700502135	Hex. screw 1/4-20x7/8""	2		
20	4700513008	Washer	4		
21	4700500012	Hex. screw	2		
22	4700791182	Nut, M8 -8 DIN985	2		
23	4812126921	Bracket	1		
24	4700586002	Lock nut M6 -8	2		

Engine hoods - yellow Engine hoods

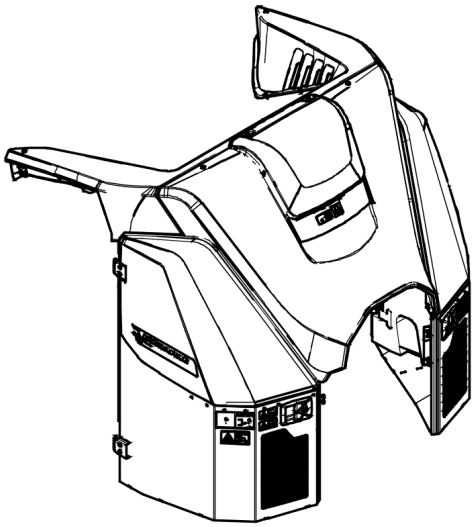

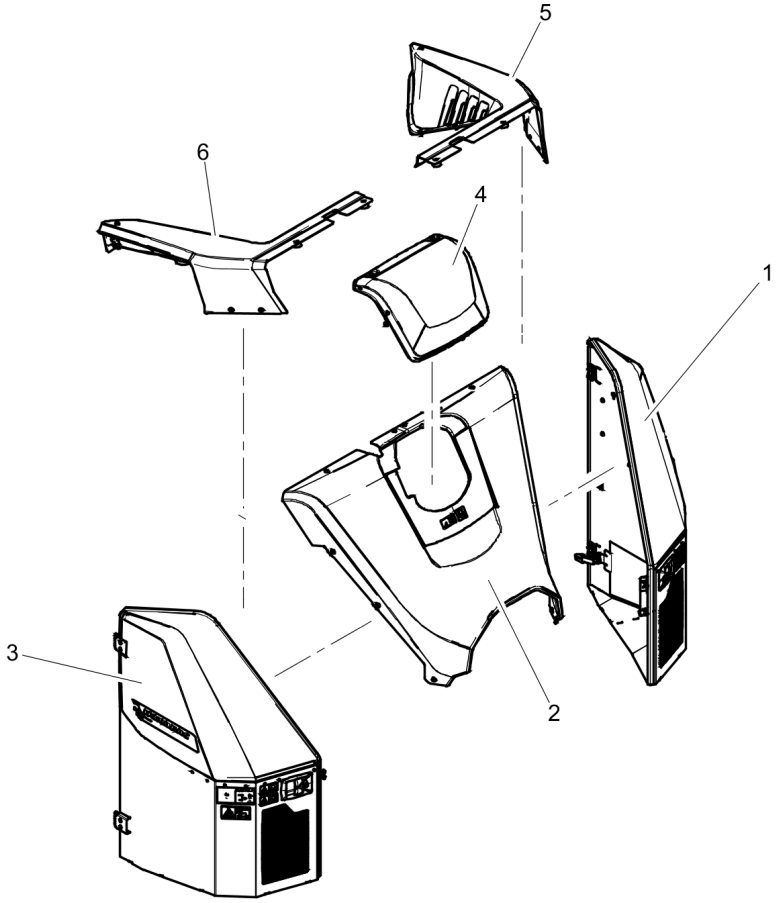

Item	Part No.	Name	Qty	L	SN INFO
1	-	Engine hood module left			
2	-	Engine hood module center			
3	-	Engine hood module right			
4	-	Expansion tank cover module			
5	-	Rear frame cover module, left			
6	-	Rear fram cover module, right			

Engine hoods - yellow Engine hood module right

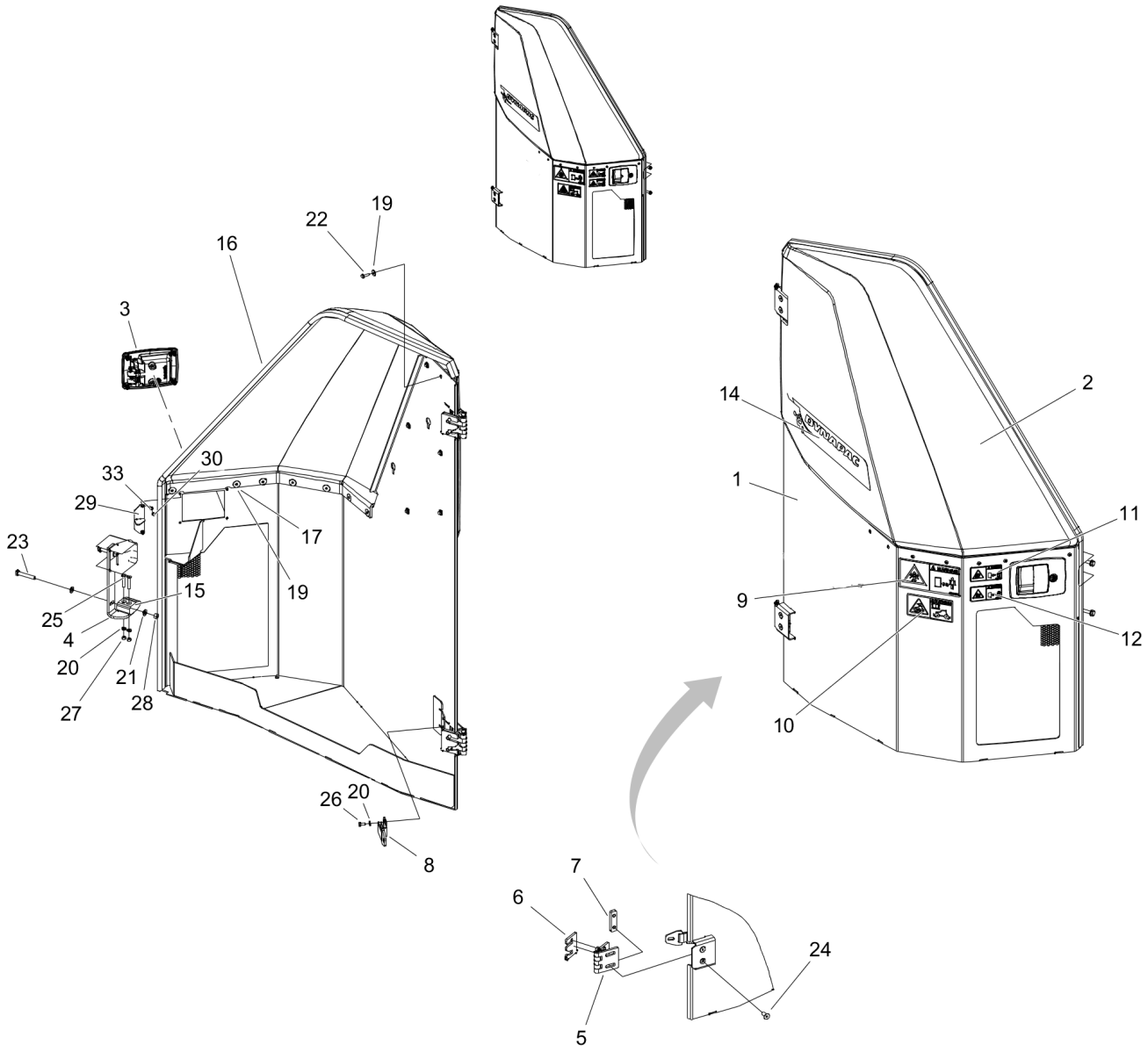

Item	Part No.	Name	Qty	L	SN INFO
1	4812124283	Enginge hood right	1		
2	4812124746	Engine hood - yellow	1		
3	4812127006	Lock	1		
4	4812126135	Lock shackle	1		
5	4812125785	Hinge	2		
6	4812125781	Bracket	2		
7	4812125783	Bracket	2		
8	4812114393	Hood latch	1		
9	4700903422	Safety decal "CRUSH AREA"	1		
10	4700904895	Safety decal "Brake release"	1		
11	4700903423	Safety label, Rotating engine components	1		
12	4700903424	Safety label, hot surfaces	1		
14	4812120127	Decal "COMPACTING ROCKS" Right side	1		
15	4700390365	Spacer	1		
16	4700902166	Edge trim	1,9		
17	4700902569	Rivet	7		
19	4700927974	Washer, 5x19x1 mm	13		
20	4700904228	Washer 6,4x12x1,5	3		
21	4700904229	Washer, 8.4x 6x1.5 mm 300HV	4		
22	4700923135	Thread rolling screw	6		
23	4700500025	Screw, M8x50 mm 8.8 A2K	2		
24	4700513003	Screw	8		
25	4700924875	Screw	2		
26	4700500012	Hex. screw	1		
27	4700570004	Hexagon nut M6	2		
28	4700570005	Hexagon nut	2		
29	4812126961	Bracket	1		
30	4700586001	Lock nut	4		
33	4700904281	Washer, 5,3x10x1 300HV	4		

Engine hoods - yellow Engine hood module left

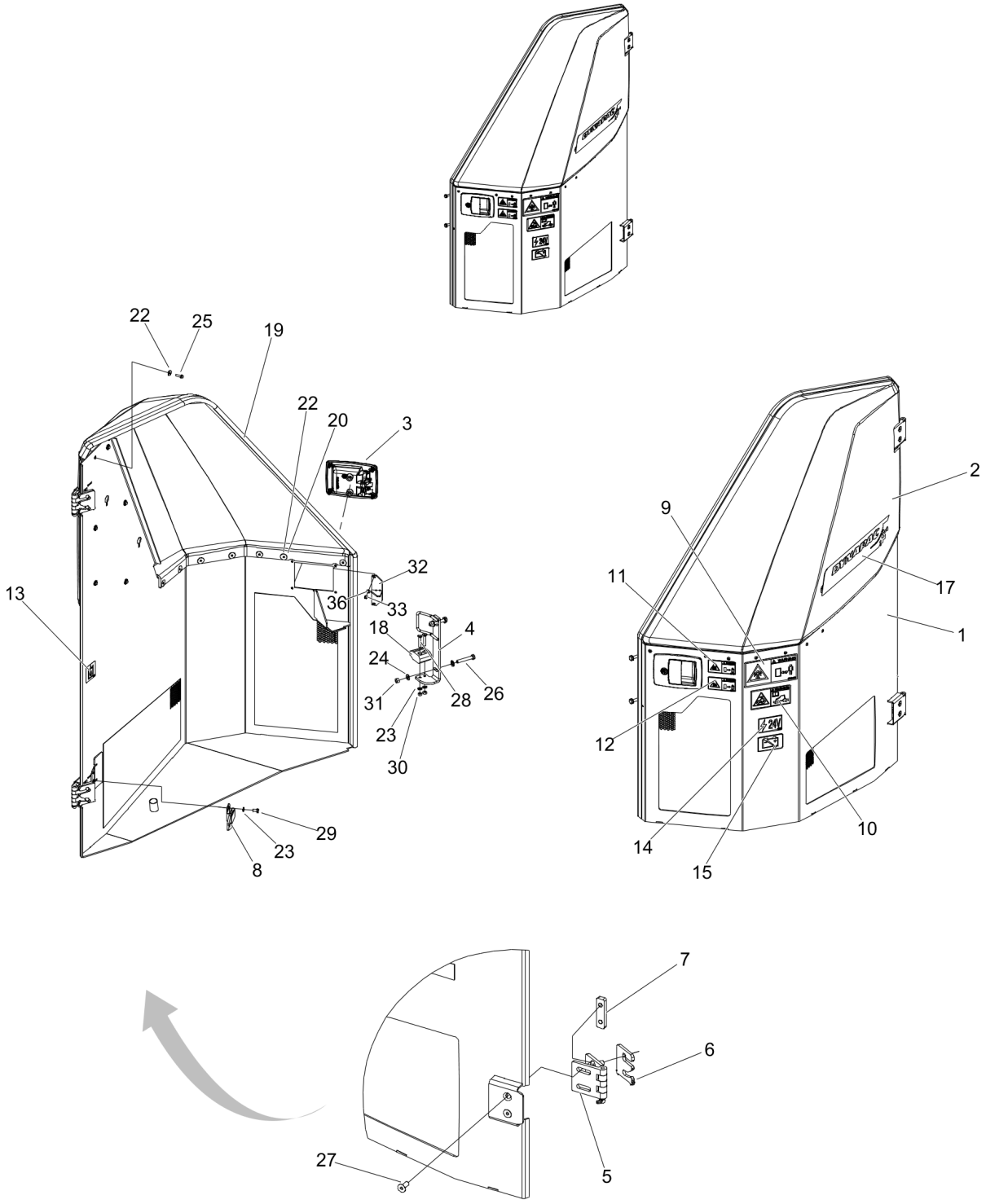

Item	Part No.	Name	Qty	L	SN INFO
1	4812124282	Engine hood left	1		
2	4812124284	Engine hood - yellow	1		
3	4812127006	Lock	1		
4	4812126136	Lock shackle	1		
5	4812125785	Hinge	2		
6	4812125781	Bracket	2		
7	4812125783	Bracket	2		
8	4812114393	Hood latch	1		
9	4700903422	Safety decal "CRUSH AREA"	1		
10	4700904895	Safety decal "Brake release"	1		
11	4700903423	Safety label, Rotating engine components	1		
12	4700903424	Safety label, hot surfaces	1		
13	4700272372	Decal "HYDRAULIC OIL"	1		
14	4700393959	Decal "Battery voltage 24V"	1		
15	4700904835	Decal "BATTERY POWER"	1		
17	4812120313	Decal "COMPACTING ROCKS" Left side	1		
18	4700390365	Spacer	1		
19	4700902166	Edge trim	1,9		
20	4700902569	Rivet	7		
22	4700927974	Washer, 5x19x1 mm	13		
23	4700904228	Washer 6,4x12x1,5	3		
24	4700904229	Washer, 8.4x 6x1.5 mm 300HV	4		
25	4700923135	Thread rolling screw	6		
26	4700500025	Screw, M8x50 mm 8.8 A2K	2		
27	4700513003	Screw	8		
28	4700924875	Screw	2		
29	4700500012	Hex. screw	1		
30	4700570004	Hexagon nut M6	2		
31	4700570005	Hexagon nut	2		
32	4812126961	Bracket	1		
33	4700586001	Lock nut	4		
36	4700904281	Washer, 5,3x10x1 300HV	4		

Engine hoods - yellow Engine hood module center

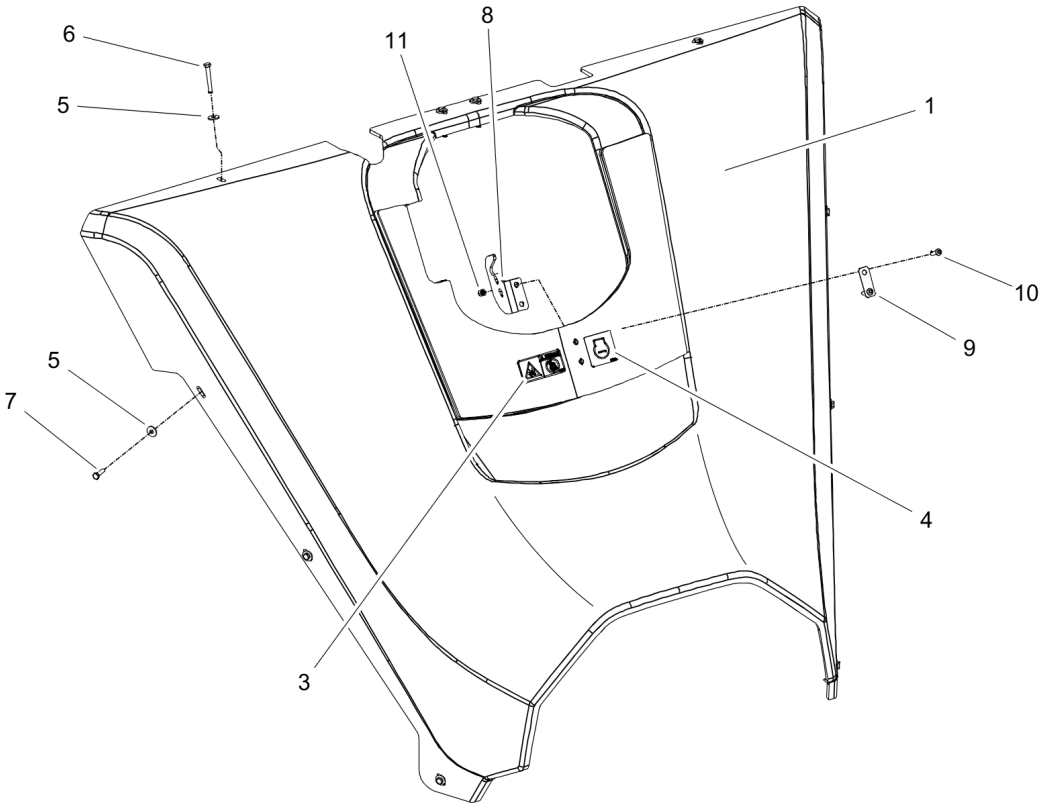

Item	Part No.	Name	Qty	L	SN INFO
1	4812124452	Engine hood, center - yellow	1		
3	4700791642	Decal "WARNING" Use of starting fluid prohib.	1		
4	4700388449	Decal "ENGINE COOLANT FILL"	1		
5	4700928381	Washer, 6.4x18x1.6 mm	10		
6	4812127061	Hexagon head screw, M6x45H mm	4		
7	4812127060	Hexagon head screw, M6x20H mm	6		
8	4812126709	Bracket	1		
9	4812126824	Washer	1		
10	4700791171	Screw	2		
11	4700586002	Lock nut M6 -8	2		

Engine hoods - yellow Rear frame cover module, left

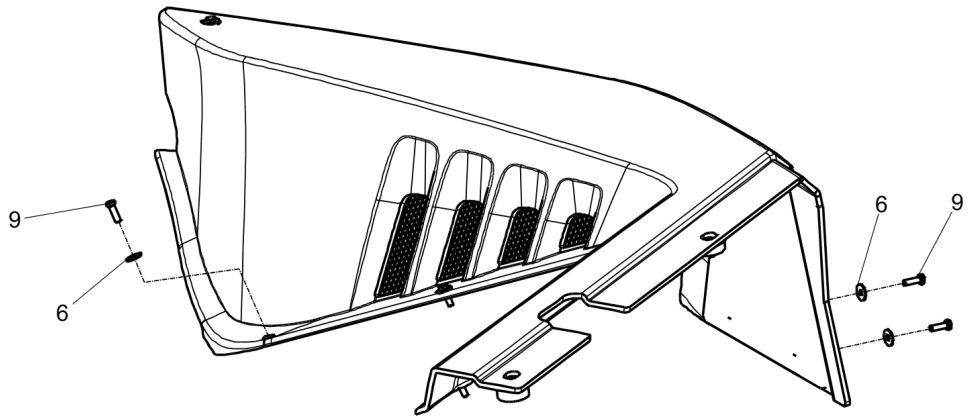

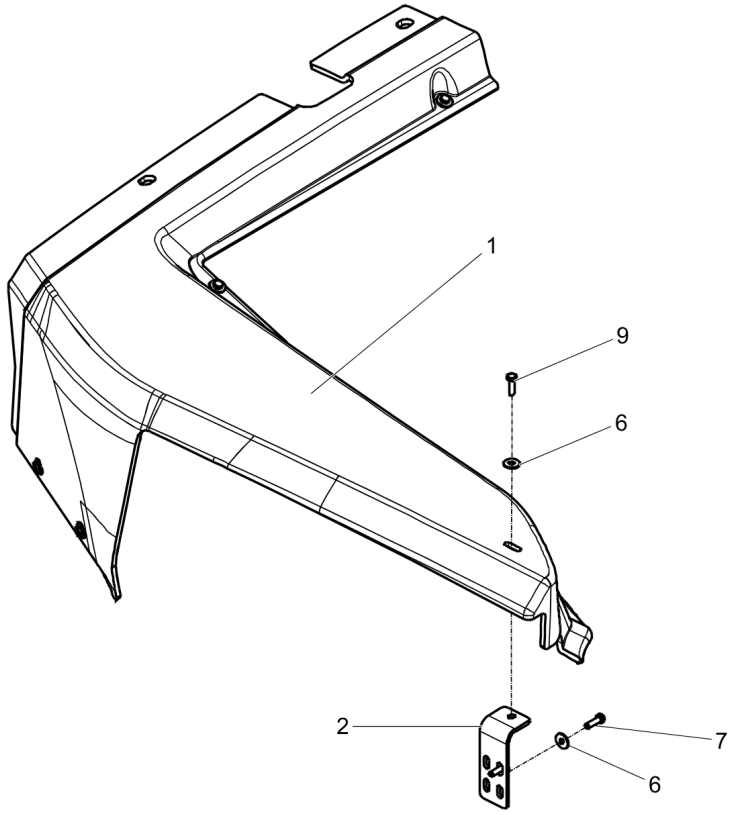

Item	Part No.	Name	Qty	L	SN INFO
1	4812124267	Rear frame cover, left - yellow	1		
2	4812124641	Bracket	1		
6	4700928381	Washer, 6.4x18x1.6 mm	9		
7	4700500040	Screw, M6x20 mm 8.8 A2K	2		
9	4812127060	Hexagon head screw, M6x20H mm	7		

Engine hoods - yellow Rear frame cover module, right

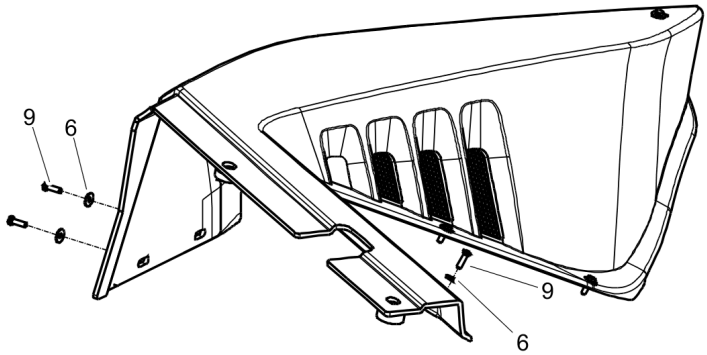

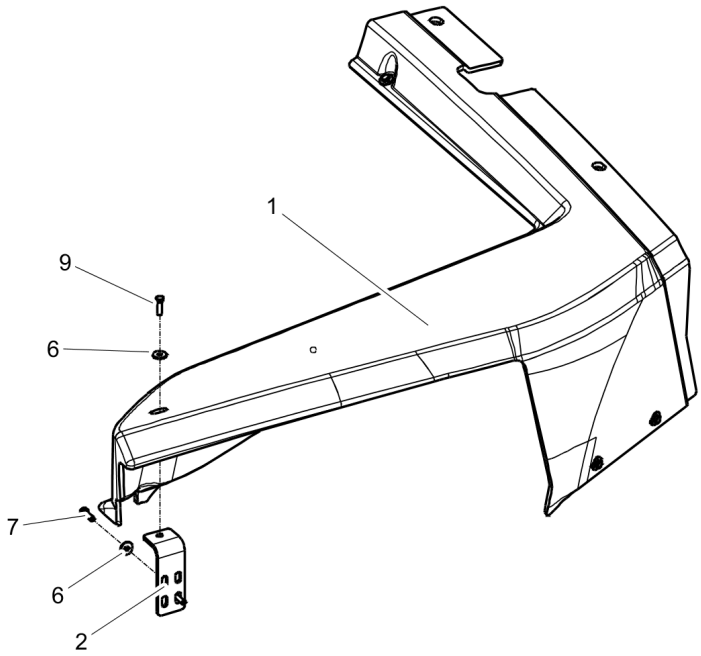

Item	Part No.	Name	Qty	L	SN INFO
1	4812124268	Rear frame cover, right - yellow	1		
2	4812124641	Bracket	1		
6	4700928381	Washer, 6.4x18x1.6 mm	9		
7	4700500040	Screw, M6x20 mm 8.8 A2K	2		
9	4812127060	Hexagon head screw, M6x20H mm	7		

Hydraulic system Hydraulic system, filter, oil and leak - Std To 022079, Eco To 021550

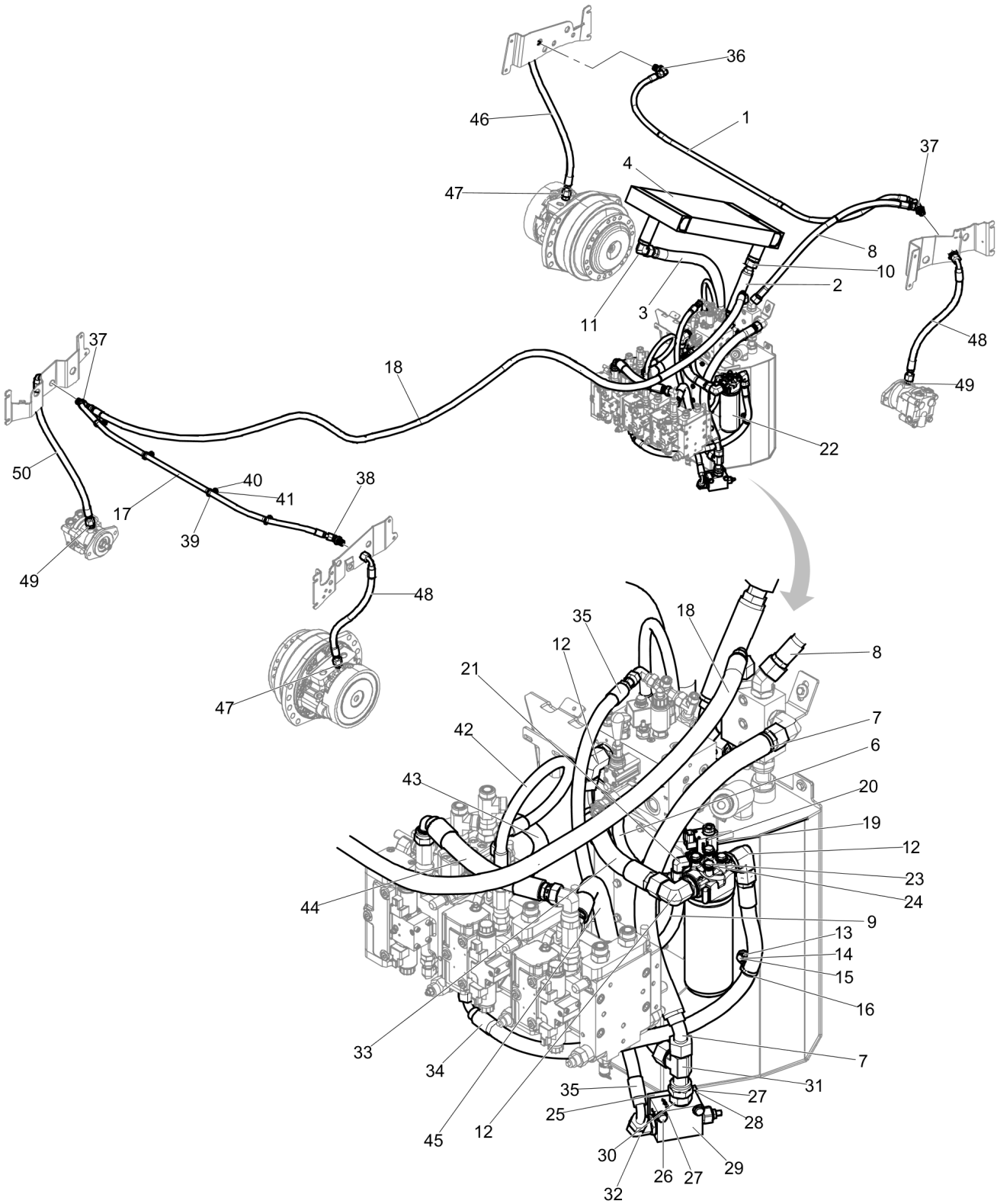

Item	Part No.	Name	Qty	L	SN INFO
1	4812124045	Hydraulic hose	1		
2	4812123955	Hydraulic hose	1		
3	4812123956	Hydraulic hose	1		
4	4812126922	Hydraulic oil cooler	1		
5	4812123957	Hydraulic hose	1		
6	4700483788	Hydraulic hose	1		
7	4812127167	Hydraulic hose	1		
8	4812124046	Hydraulic hose	1		
9	4812123961	Hydraulic hose	1		
10	4812112555	Adapter	1		
11	4812121972	Connector elbow	1		
12	4700792299	Adapter	3		
13	4812117326	Cable tie holder	1		
14	4700904229	Washer, 8.4x 6x1.5 mm 300HV	1		
15	4700500022	Screw	1		
16	4700313102	Cable ties	1		
17	4812124754	Hydraulic hose	1		
18	4812124753	Hydraulic hose	1		
19	4700500504	Hexagon screw with flange	2		
20	4812123062	Hydraulic valve, servo control	1		
21	4700791845	Elbow 90, O-ring with swivel	2		
22	4812112260	Hydraulic oil filter	1		
22.1	4812112262	Hydraulic oil filter element	1		
22.2	4812160664	Fiction ring, filter head	1		
22.3	4700936898	Sensor Red (RW)	1		
23	4700500048	Screw, M10x20 mm 8.8 A3K	4		
24	4700904230	Steel plain washer	4		
25	4812127159	Bracket	1		
26	4700500109	Screw, M10x65 mm 8.8 A3K	2		
27	4700904230	Steel plain washer	4		
28	4700500028	Hex Head screw	2		
29	4812127161	Hydraulic valve	1		
30	4700791631	Connector, G3⁄4 x 7⁄16 in. UNF	1		
31	4812127255	Tee-connector ORFS	1		
32	4700792068	Elbow 90°	1		
33	4812124897	Hydraulic hose	1		
34	4812124896	Hydraulic hose	1		
35	4812127168	Hydraulic hose	1		

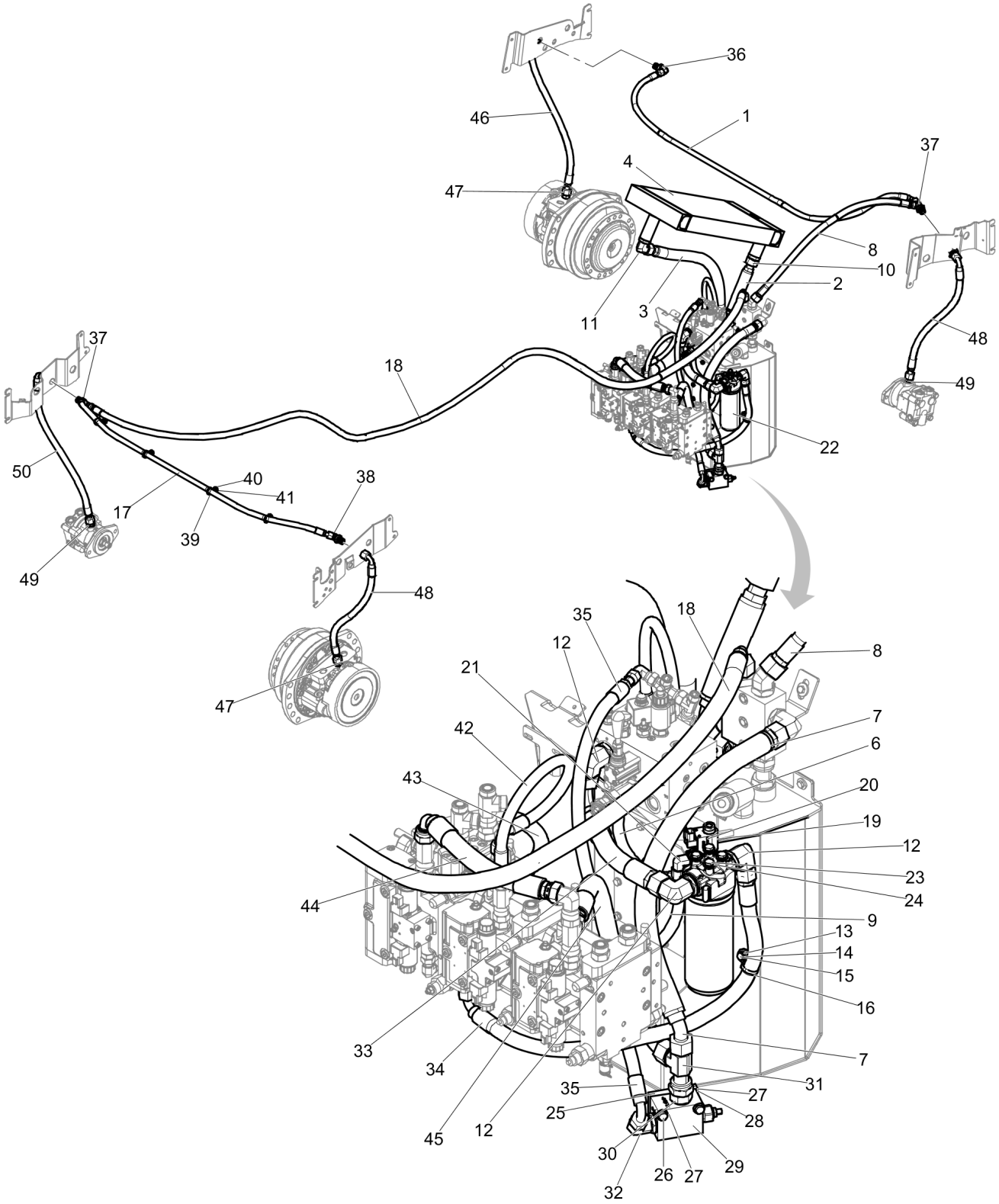
36
1
46
37
4
47
8
10
2
3
11
48
49
37
18
22
50
40
38
41
17
39
49
48
47
35
18
12
8
21
7
42
6
43
20
19
12
23
24
44
9
13
14
15
16
33
7
34
31
35
27
25
28
45
12
30
29
26
27
32

Item	Part No.	Name	Qty	L	SN INFO
36	4812123549	Bulkhead union elbow 45 ORFS	1		
37	4812117677	Bulkhead T-connector orfs	2		
38	4812123549	Bulkhead union elbow 45 ORFS	1		
39	4812117326	Cable tie holder	4		
40	4700500505	Screw, M8x20 mm 8.8 A2K	4		
41	4700313102	Cable ties	4		
42	4700483726	Hydraulic hose	1		
43	4812127164	Hydraulic hose	1		
44	4812127165	Hydraulic hose	1		
45	4812127166	Hydraulic hose	1		
46	4700483716	Hydraulic hose	1		
47	4700791743	Straight connector orfs	2		
48	4812124023	Hydraulic hose	2		
49	4812124831	Straight connector orfs	1		
50	4811000391	Hydraulic hose	1		

Hydraulic system Hydraulic system, filter, oil and leak - Std From 022080, Eco From 021551

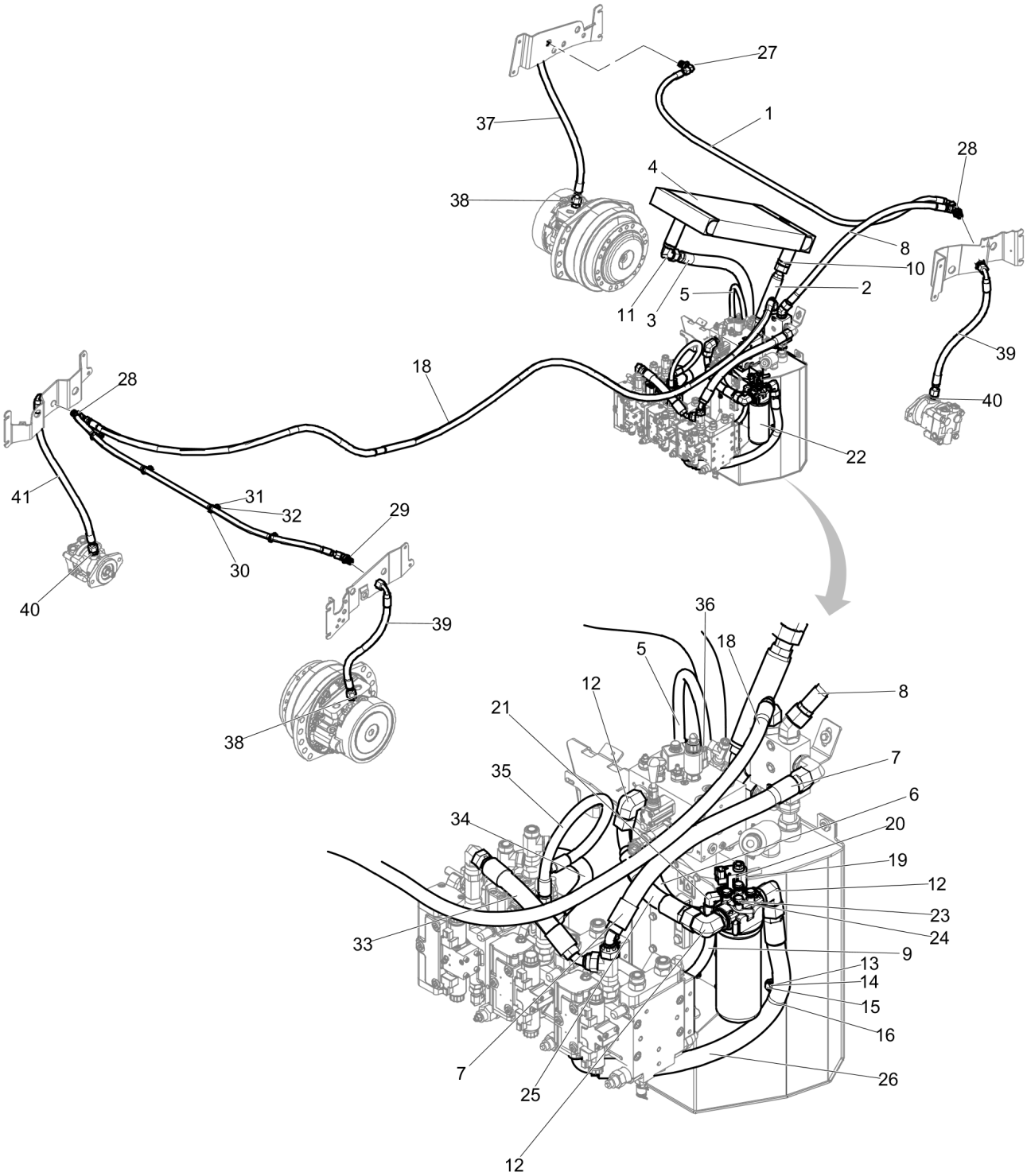

Item	Part No.	Name	Qty	L	SN INFO
1	4812124045	Hydraulic hose	1		
2	4812123955	Hydraulic hose	1		
3	4812123956	Hydraulic hose	1		
4	4812126922	Hydraulic oil cooler	1		
5	4812123957	Hydraulic hose	1		
6	4700483788	Hydraulic hose	1		
7	4812127664	Hydraulic hose	1		
8	4812124046	Hydraulic hose	1		
9	4812123961	Hydraulic hose	1		
10	4812112555	Adapter	1		
11	4812121972	Connector elbow	1		
12	4700792299	Adapter	3		
13	4812117326	Cable tie holder	2		
14	4700904229	Washer, 8.4x 6x1.5 mm 300HV	1		
15	4700500022	Screw	1		
16	4700313102	Cable ties	2		
17	4812124754	Hydraulic hose	1		
18	4812124753	Hydraulic hose	1		
19	4700500504	Hexagon screw with flange	2		
20	4812123062	Hydraulic valve, servo control	1		
21	4700791845	Elbow 90, O-ring with swivel	2		
22	4812112260	Hydraulic oil filter	1		
22.1	4812112262	Hydraulic oil filter element	1		
22.2	4812160664	Fiction ring, filter head	1		
22.3	4700936898	Sensor Red (RW)	1		
23	4700500048	Screw, M10x20 mm 8.8 A3K	4		
24	4700904230	Steel plain washer	4		
25	4812124897	Hydraulic hose	1		
26	4812127662	Hydraulic hose	1		
27	4812123395	Bulkhead union elbow 90 ORFS	1		
28	4812117677	Bulkhead T-connector orfs	2		
29	4812123549	Bulkhead union elbow 45 ORFS	1		
30	4812117326	Cable tie holder	4		
31	4700500505	Screw, M8x20 mm 8.8 A2K	4		
32	4700313102	Cable ties	4		
33	4812127663	Hydraulic hose	1		
34	4700483729	Hydraulic hose	1		
35	4700483726	Hydraulic hose	1		

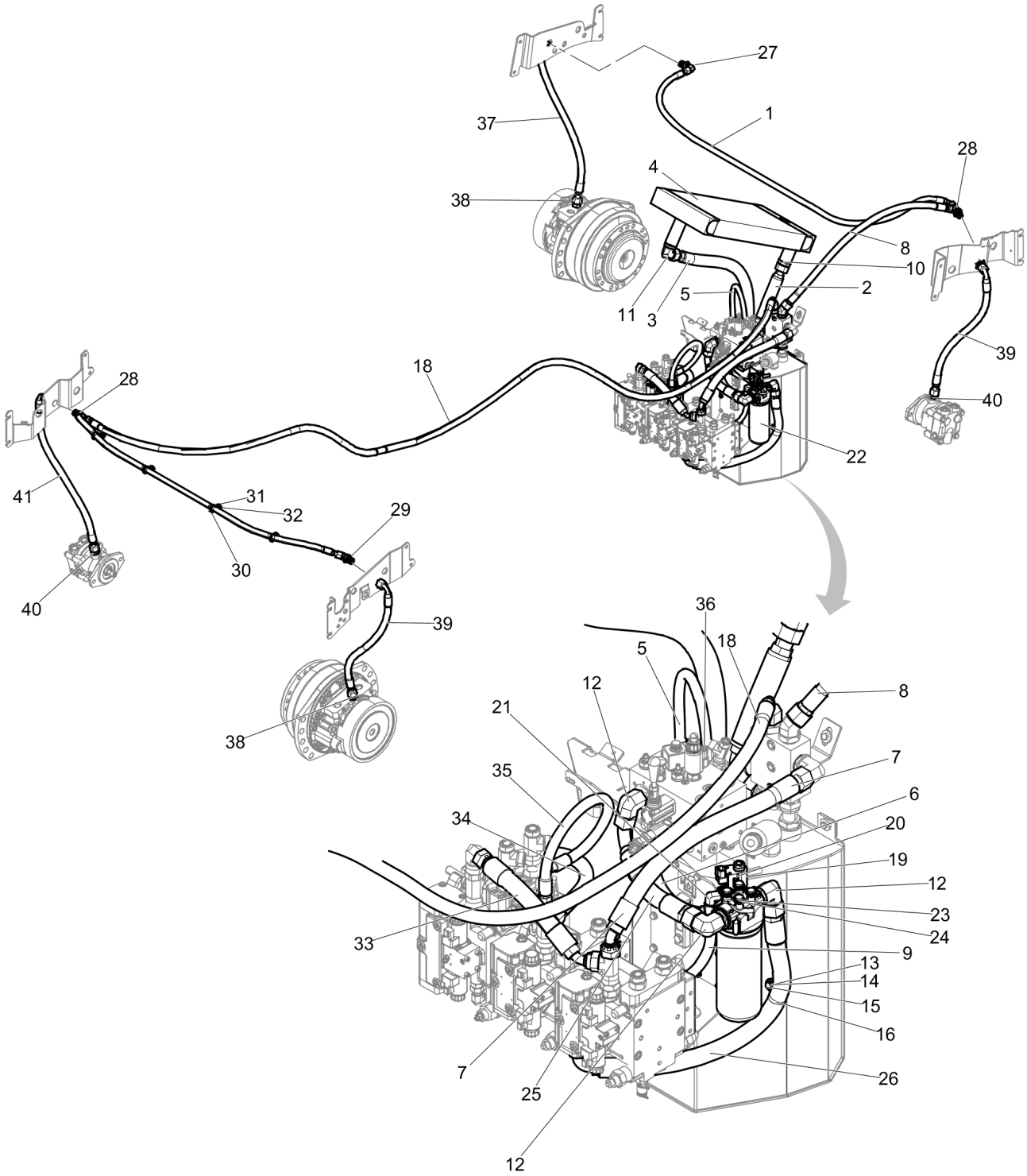
27
1
37
28
4
38
8
10
5
2
11
3
39
18
28
40
22
41
31
32
29
30
40
39
36
18
5
8
12
21
38
7
35
6
34
20
19
12
23
24
33
9
13
14
15
16
7
26
25
12

Item	Part No.	Name	Qty	L	SN INFO
36	4700792133	Adapter	1		
37	4700483716	Hydraulic hose	1		
38	4700791743	Straight connector orfs	2		
39	4812124023	Hydraulic hose	2		
40	4812124831	Straight connector orfs	2		
41	4811000391	Hydraulic hose	1		

Hydraulic system Main hydraulic valve, cpl

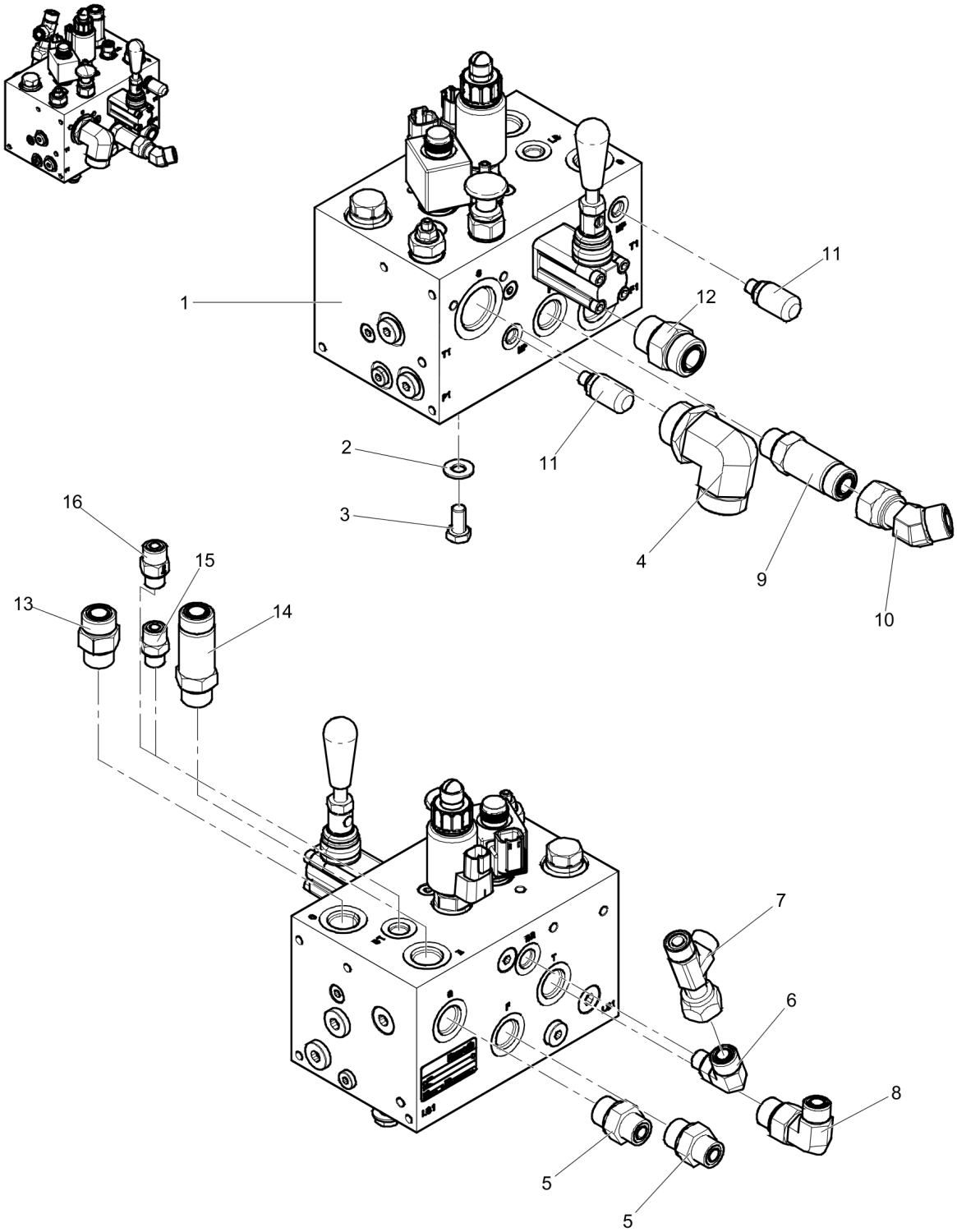

Item	Part No.	Name	Qty	L	SN INFO
1	4812123244	Hydraulic valve	1		
2	4700904230	Steel plain washer	2		
3	4700500048	Screw, M10x20 mm 8.8 A3K	2		
4	4700792299	Adapter	1		
5	4700791410	Straight o-ring connector	2		
6	4700792111	Elbow 90, O-ring with swivel	1		
7	4700791798	Adapter	1		
8	4700792133	Adapter	1		
9	4700791821	Straight connector orfs	1		
10	4700904781	Adapter	1		
11	4700910162	Measuring nipple	2		
12	4700791823	Adapter	1		
13	4700791743	Straight connector orfs	1		
14	4700791821	Straight connector orfs	1		
15	4700791409	Straight connector orfs	1		
16	4812117024	Check valve	1	A	

Comments for Page: Main hydraulic valve, cpl

(L)OCAL REMARKS

A | en_US | Mounted when equipped with Emergency steering

Hydraulic system 4812123244 Hydraulic valve

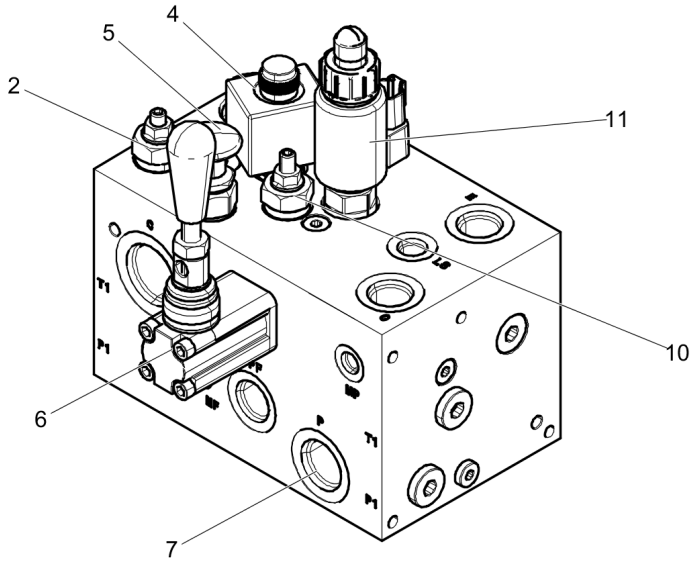

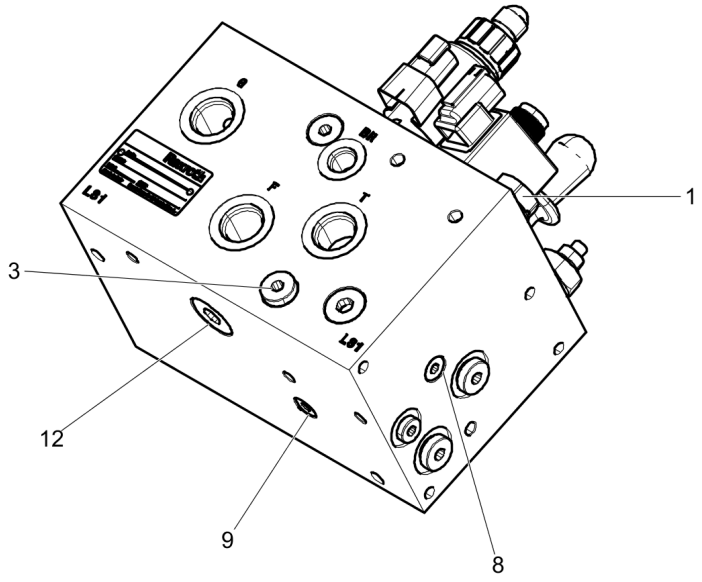

Item	Part No.	Name	Qty	L	SN INFO
0	4812123244	Hydraulic valve	1		
1	4812157654	Pressure compensator	1		
2	--	Pressure relief valve	1		
3	4812157681	Shuttle valve	1		
4	--	Electric 3/2 valve	1		
4	4812157771	Coil	1		
5	4812157682	2/2 Valve	1		
6	4812157772	Hand pump	1		
6	4812157773	Kit manual lever	1		
7	--	Orifice	1		
8	4812157684	Orifice	1		
9	4812157685	Orifice	1		
10	4812157686	Brake pressure relief valve	1		
11	4812157687	Proportional pressure relief valve	1		
11	4812160654	Coil	1		
12	--	Check valve	1		

Hydraulic pump module, Std To 022079, Eco To 021550 Hydraulic pump & connectors

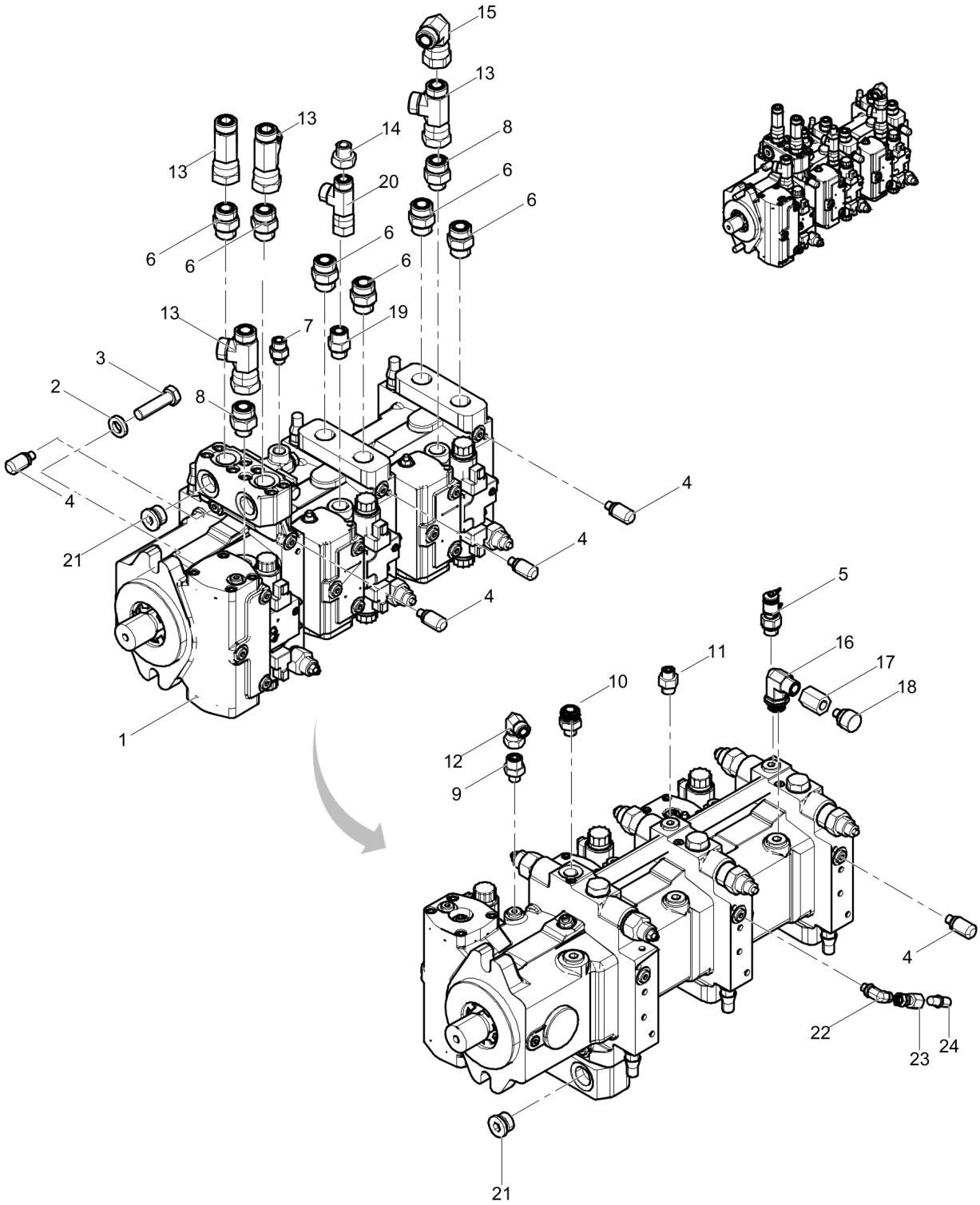

Item	Part No.	Name	Qty	L	SN INFO
1	4700390602	Hydraulic pump	1		To A022079
1	4812118210	Hydraulic pump, Eco	1		To A021550
2	4700904558	Washer, 17x30x6 mm 300 HV	2		
3	4700500270	Screw M16x60 10,9	2		
4	4700901157	Measuring nipple	5		
5	4812123305	Measuring fitting	1		
6	4700791853	Straight connector orfs	6		
7	4700792563	Straight connector	1		
8	4700792336	Straight connector orfs	2		
9	4700792115	Straight connector	1		
10	4700792465	Straight connector orfs	1		
11	4700792337	Straight connector orfs	1		
12	4700791745	Elbow 90, O-ring with swivel	1		
13	4700904496	Adapter	4		
14	4700791829	Reducer orfs	1		
15	4700904584	Connector elbow 90 ORFS	1		
16	4700792347	Connector elbow 90 orfs	1		
17	4812124035	Straight connector orfs	1		
18	4812116781	Oil filling plug	1		
19	4700904641	Straight connector orfs	1		
20	4700791832	Tee-connector	1		
21	4700792810	Plug threaded	2		
22	4700792094	Elbow 90°	1		
23	4700792649	Straight connector orfs	1		
24	4700923405	Measuring nipple	1		

4700390602 Hydraulic pump 4700390602 Hydraulic pump

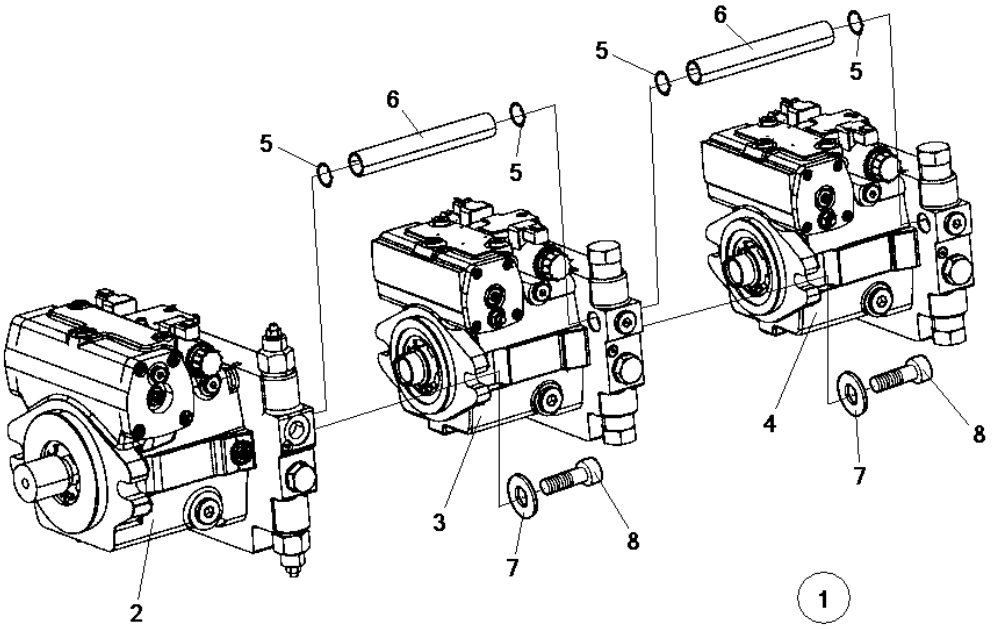

Item	Part No.	Name	Qty	L	SN INFO
1	4700390602	Hydraulic pump	1		
2	4812155785	Hydraulic pump	1		
3	4812155786	Hydraulic pump	1		
4	4812155787	Hydraulic pump, vibration	1		
5	4812159094	O-ring	4		
6	--	Socket pipe	2		
7	--	Washer	4		
8	--	Screw	4		

4812155785 Hydraulic pump 4812155785 Hydraulic pump

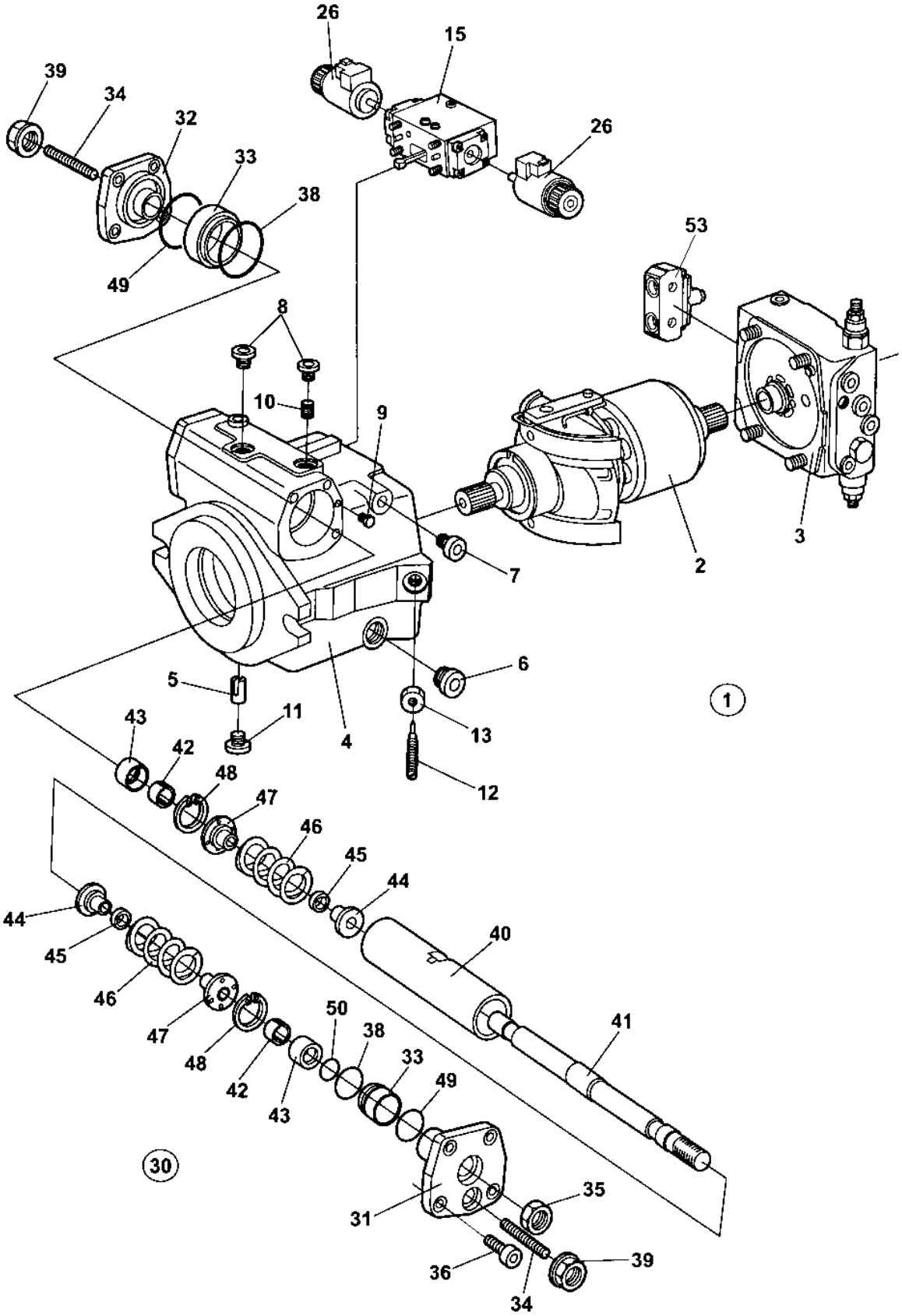

Item	Part No.	Name	Qty	L	SN INFO
1	4812155785	Hydraulic pump	1		
1	4700940676	Seal kit	1		
2	--	Rotating group, cpl	1		
3	--	Valve block, cpl	1		
4	--	Housing	1		
5	4700936612	Pin	1		
6	4700935219	Plug	1	1	
7	4700902724	Plug	2	1	
8	4700902625	Plug	3	1	
9	4700909514	Double break-off pin	2		
10	4700936308	Orifice	2		
11	4700902624	Screw	1	1	
12	4700902687	Pin	1		
13	4700902695	Nut	1	1	
15	--	Control module	1		
26	4812156151	Solenoid	2		
30	--	Hydraulic control, cpl	1		
31	---	Cover	1		
32	---	Cover	1		
33	---	Guide Ring	2		
34	4700936642	Pin	2		
35	4700902638	Nut	1		
36	4700902752	Screw	8		
38	---	Seal ring	2	1	
39	4700936644	Sealing nut	2	1	
40	---	Piston	1		
41	4700936646	Rod	1		
42	---	Ring	2		
43	4700938014	Sleeve	2		
44	4700936647	Spring collar	2		
45	4700936648	Spacer ring	2		
46	4700936654	Spring	2		
47	4700936655	Spring collar	2		
48	4700936656	Retaining ring	2		
49	4700936643	O-ring	2	1	
50	4700909469	O-ring	1		
53	--	Flushing valve	1		

Comments for Page: 4812155785 Hydraulic pump

(L)OCAL REMARKS

1 | en_US | Included in seal kit

This page intentionally left blank

4812155785 Hydraulic pump Rotating group, cpl

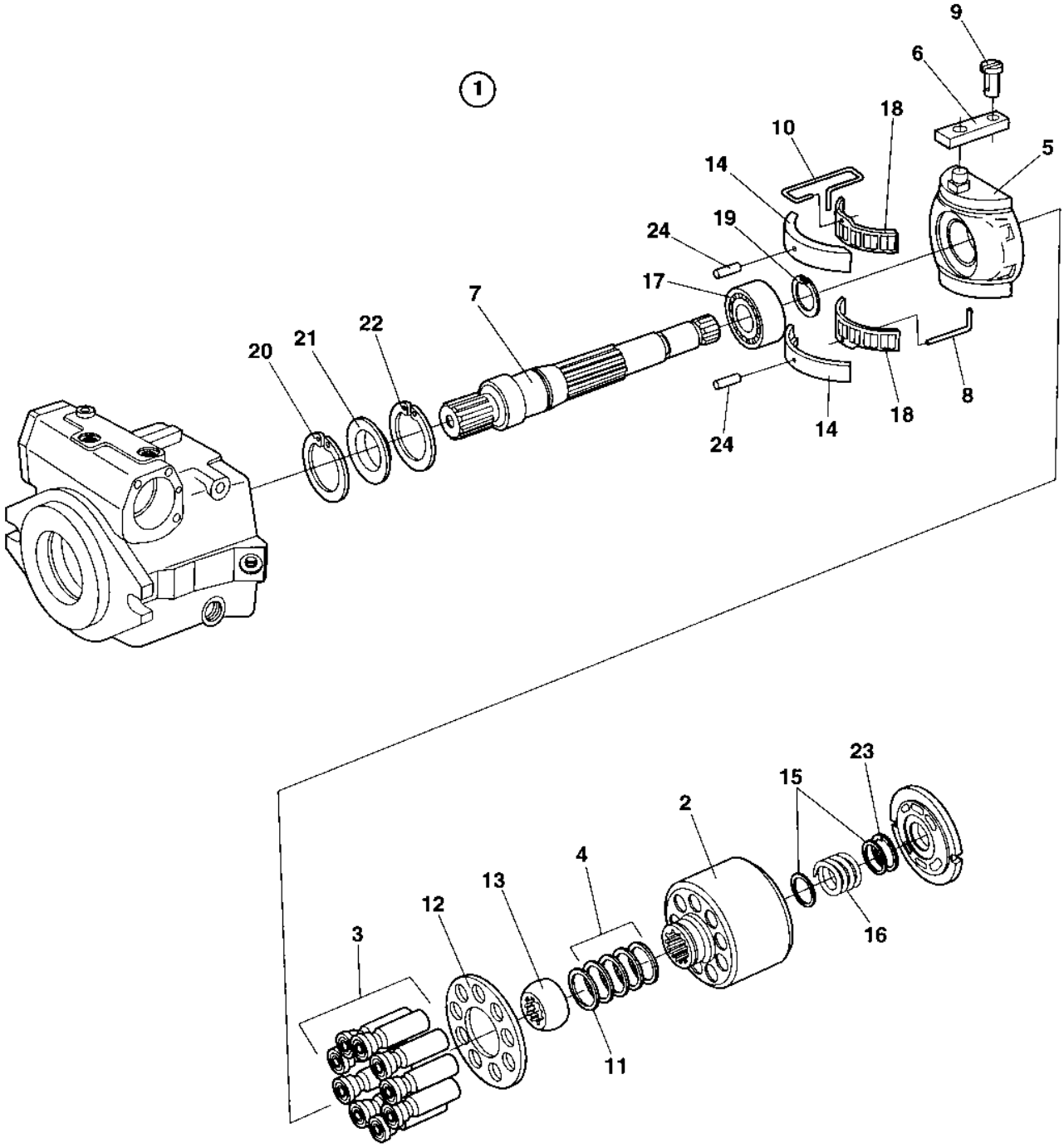

Item	Part No.	Name	Qty	L	SN INFO
1	-	Rotating group, cpl	1		
2	4700936615	Cylinder with control plate	1		
3	4700936616	Piston	9		
4	4700936617	Cup spring stack	1		
5	4700936618	Cradle	1		
6	4700936619	Slide ring	1		
7	--	Shaft	1		
8	4700936621	Wire	1		
9	4700935164	Pin	1		
10	4700936622	Wire	1		
11	4700936623	Shim	1		
11	4700936624	Shim	1		
11	4700936625	Shim	1		
11	4700936626	Shim	1		
12	4700936627	Retaining plate	1		
13	4700936628	Retaining ball	1		
14	4700936629	Bearing liner, 1 pair	1		
15	4700936630	Washer	2		
16	4700936631	Pressure spring	1		
17	4700936632	Bearing	1		
18	4700936633	Cradle bearing assembly, 1 set	1		
19	4700927303	Lock ring	1		
20	4700936634	Retaining ring	1		
21	4700936635	Seal ring	1	1	
22	4700936636	Retaining ring	1		
23	4700936637	Retaining ring	1		
24	4700902792	Pin	2		

Comments for Page: Rotating group, cpl

(L)OCAL REMARKS

1 | en_US | Includes in seal kit

4812155785 Hydraulic pump Valve block, cpl

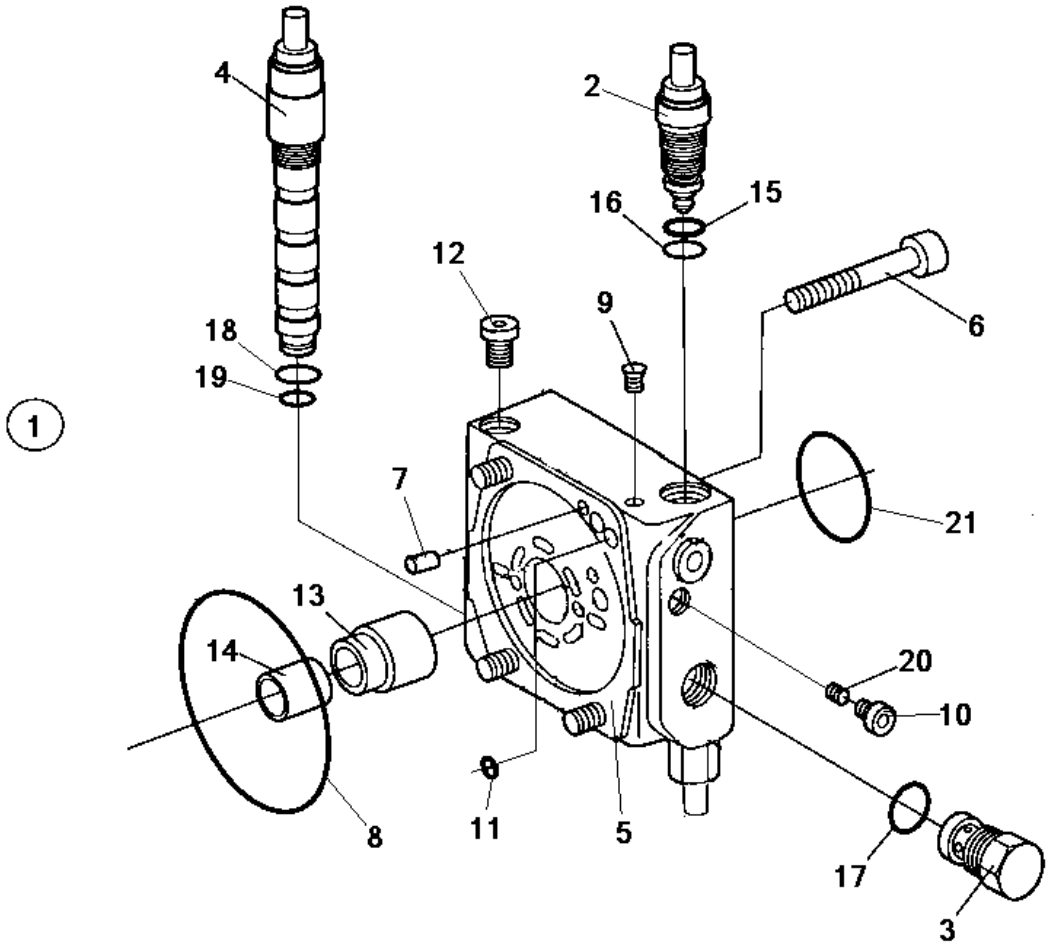

Item	Part No.	Name	Qty	L	SN INFO
1	-	Valve block, cpl	1		
2	4812161086	Pressure relief valve, cpl	2		
3	4812156154	Pressure relief valve	1		
4	4812157095	Pressure overide valve	1		
5	--	Housing	1		
6	--	Screw	4		
7	4700936664	Pin	2		
8	4700936665	O-ring	1		
9	4700909514	Double break-off pin	7		
10	4700936855	Locking screw	1		
11	4700909469	O-ring	1		
12	4700902625	Plug	2		
13	--	Bush	1		
14	4700936662	Bearing bush	1		
15	4700936673	Back-up ring	2		
16	4700927278	O-ring	2		
17	4812157851	O-ring	1		
18	4700902783	O-ring	1		
19	4700936394	O-ring	1		
20	4700936313	Orifice	1		
21	4700935192	O-ring	1		

4812155785 Hydraulic pump Control module

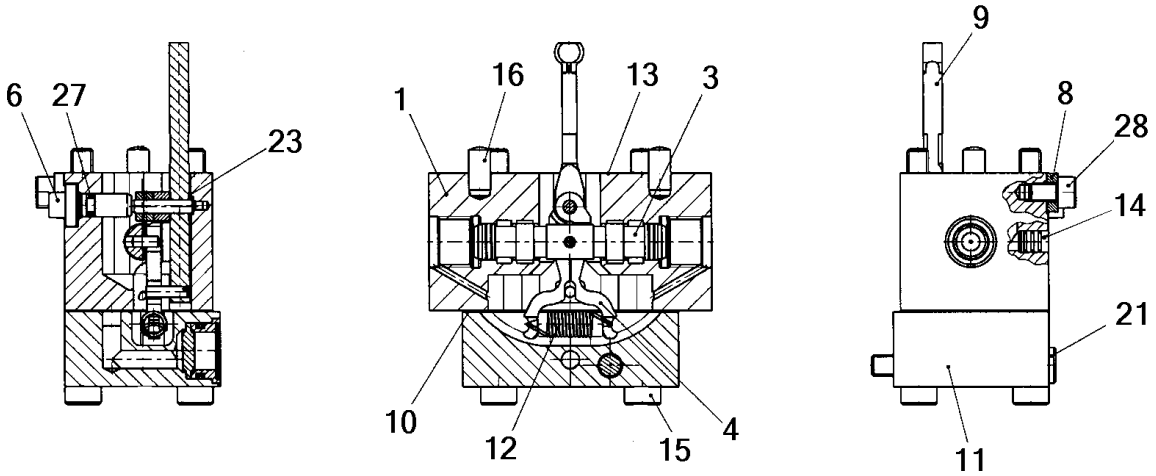

Item	Part No.	Name	Qty	L	SN INFO
1	-	Housing	1		
3	-	Control piston	1		
4	-	Lever pair	1		
6	-	Pin	1		
8	-	Shim	1		
9	-	Feedback lever	1		
10	4812156599	Gasket	1		
11	-	Cover with filter	1		
12	-	Lock nut	1		
13	-	Gasket	1		
14	-	Plug	2		
15	4700935210	Screw	4		
16	4700936869	Cylindrical pin	2		
21	4700936689	Screw	1		
23	-	Shim	N		
27	4700945311	O-ring	1		
28	-	Screw	1		

4812155785 Hydraulic pump Flushing valve

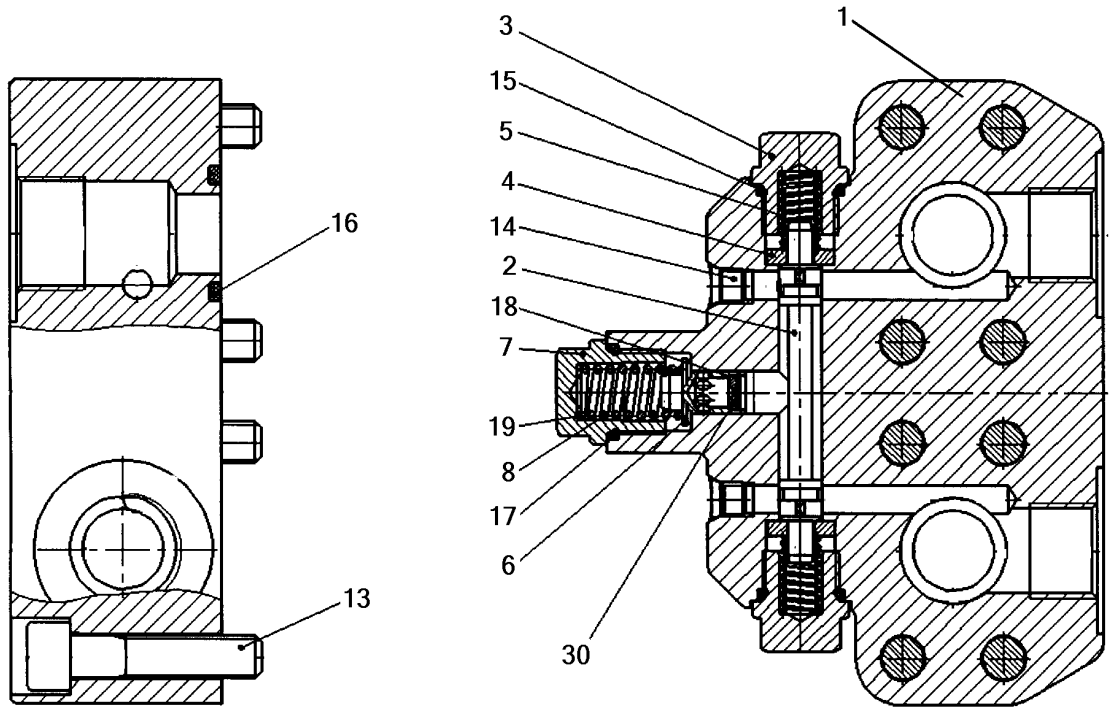

Item	Part No.	Name	Qty	L	SN INFO
0	4812161090	Flushing valve, cpl	1		
1	--	Valve plate	1		
2	--	Piston	1		
3	--	Locking screw	2		
4	--	Washer	2		
5	--	Pressure spring	2		
6	--	Valve piston	1		
7	--	Locking screw	1		
8	--	Pressure spring	1		
13	--	Socket head screw	8		
14	--	Pin	1		
15	4812157170	O-ring	2		
16	--	O-ring	2		
17	--	O-ring	1		
18	--	Retaining ring	1		
19	--	Shim	1		
30	-	Orifice	1		

4812155786 Hydraulic pump 4812155786 Hydraulic pump

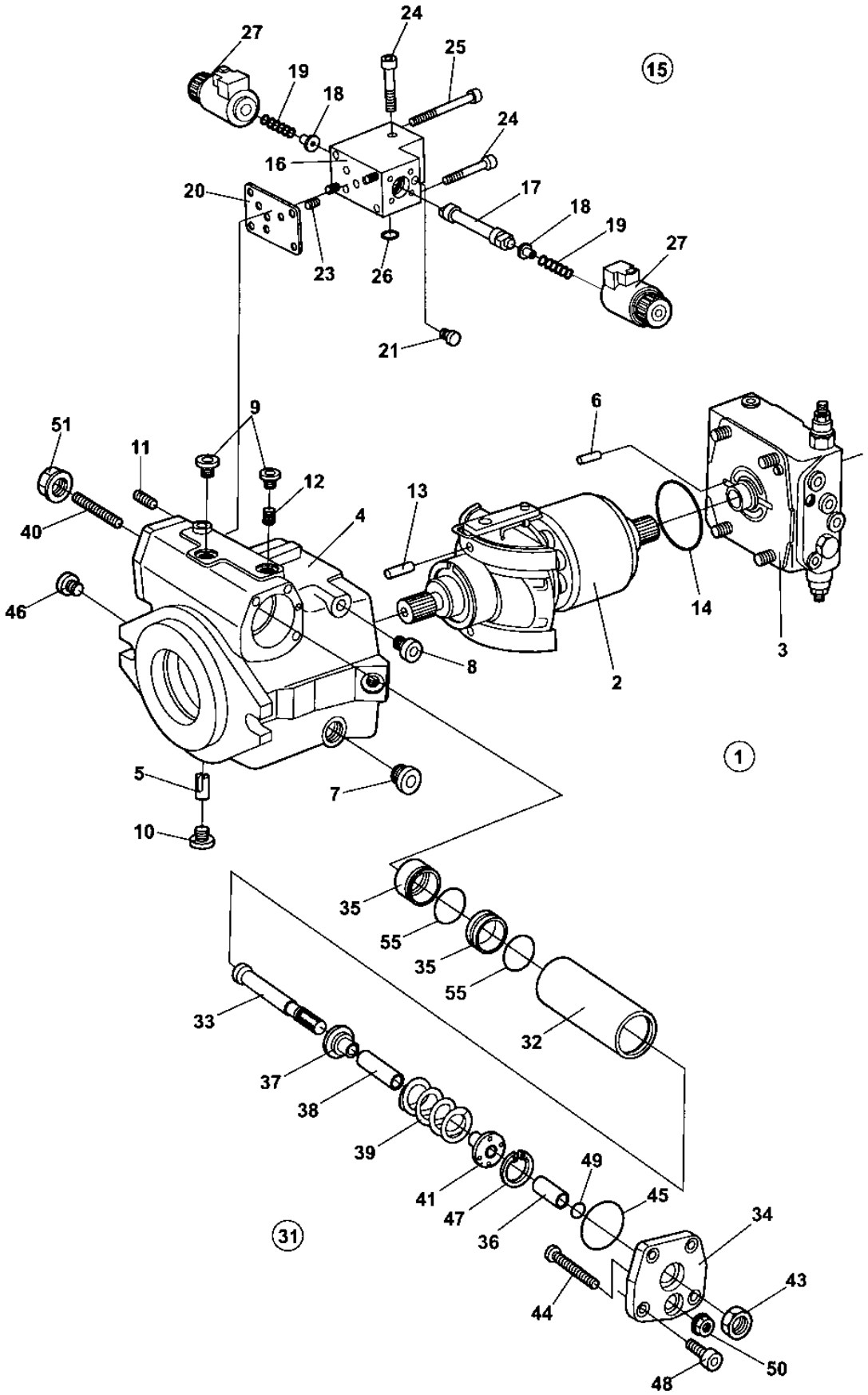

Item	Part No.	Name	Qty	L	SN INFO
1	4812155786	Hydraulic pump	1		
1	4700950461	Seal kit	1		
2	--	Rotary group, cpl	1		
3	--	Valve block, cpl	1		
4	--	Housing	1		
5	4700935158	Pin	1		
6	4700936869	Cylindrical pin	1		
7	4700935219	Plug	1	1	
8	4700902724	Plug	1	1	
9	4700902625	Plug	3	1	
10	4700902624	Screw	1	1	
11	4700909514	Double break-off pin	1		
12	4700936308	Orifice	2		
13	4700902792	Pin	2		
14	4700937206	O-ring	1	1	
15	4812160394	Control valve, cpl	1		
16	---	Housing	1		
17	---	Piston	1		
18	4700945776	Spring collar	2		
19	4700936686	Spring	2		
20	---	Washer	1	1	
21	---	Pin	2		
23	4700909514	Double break-off pin	1		
24	4700927358	Screw	3		
25	4700908383	Screw	2		
26	---	O-ring	1	1	
27	4812156152	Solenoid	2		
31	--	Hydraulic control, cpl	1		
32	---	Piston	1		
33	---	Rod	1		
34	---	Cover	1		
35	---	Guide Ring	1		
36	---	Ring	1		
37	---	Spring collar	1		
38	---	Bush	1		
39	---	Spring	1		
40	4700937195	Pin	1		
41	---	Spring collar	1		

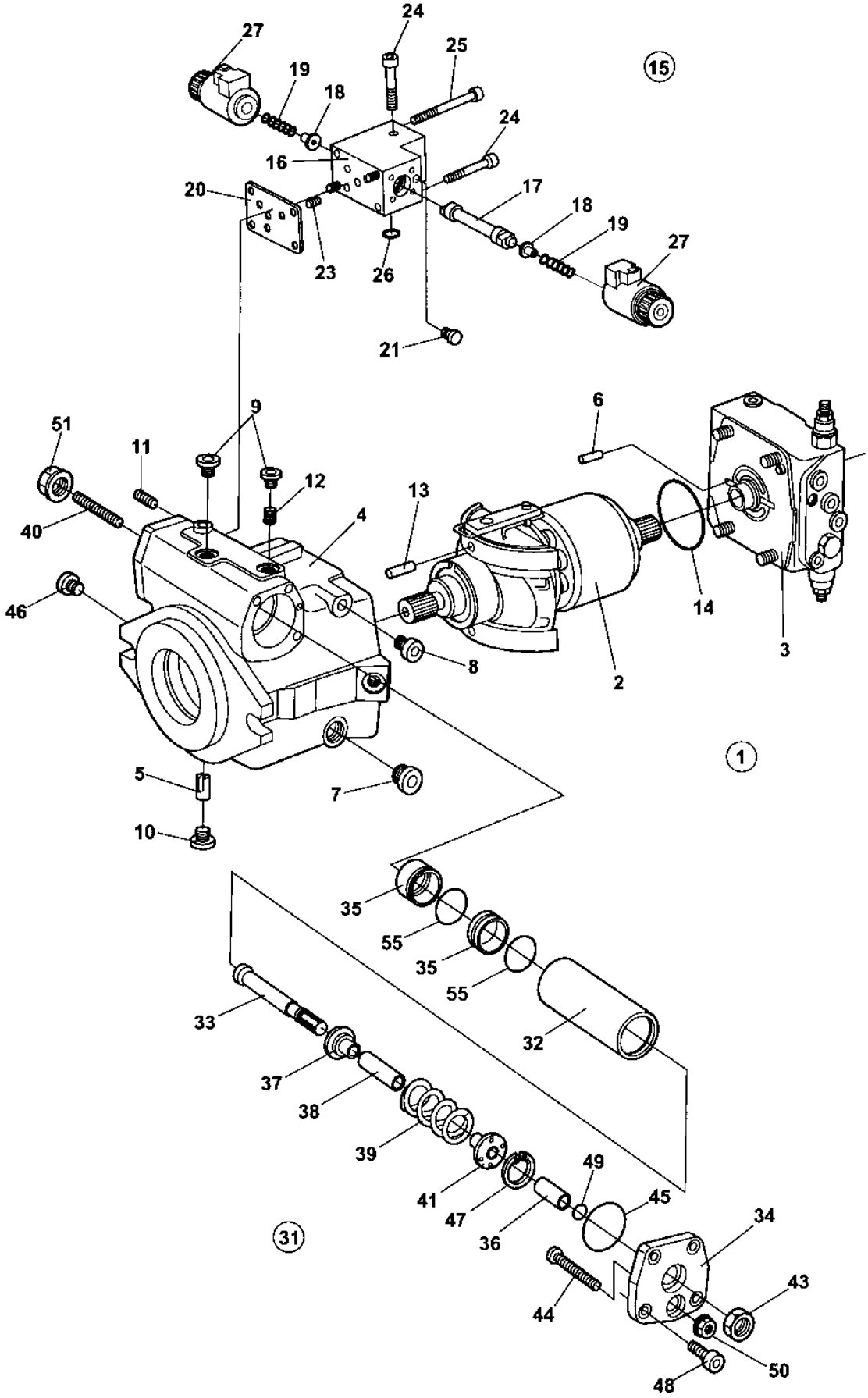
15
1
31
24
25
27
19
18
16
20
23
26
17
21
9
6
51
11
12
13
4
40
46
14
3
8
2
5
7
10
35
55
32
33
37
38
39
41
47
36
49
45
34
43
44
50
48

Item	Part No.	Name	Qty	L	SN INFO
43	4700937236	Nut	1		
44	4700937195	Pin	1		
45	---	O-ring	1	1	
46	4700902811	Plug	1		
47	---	Retaining ring	1		
48	4700902688	Screw	4		
49	4700936394	O-ring	1	1	
50	4700936393	Seal lock nut	1	1	
51	4700936393	Seal lock nut	1	1	
55	---	O-ring	2		

Comments for Page: 4812155786 Hydraulic pump

(L)OCAL REMARKS

1 | en_US | Included in seal kit, see item 1.

4812155786 Hydraulic pump Rotary group, cpl

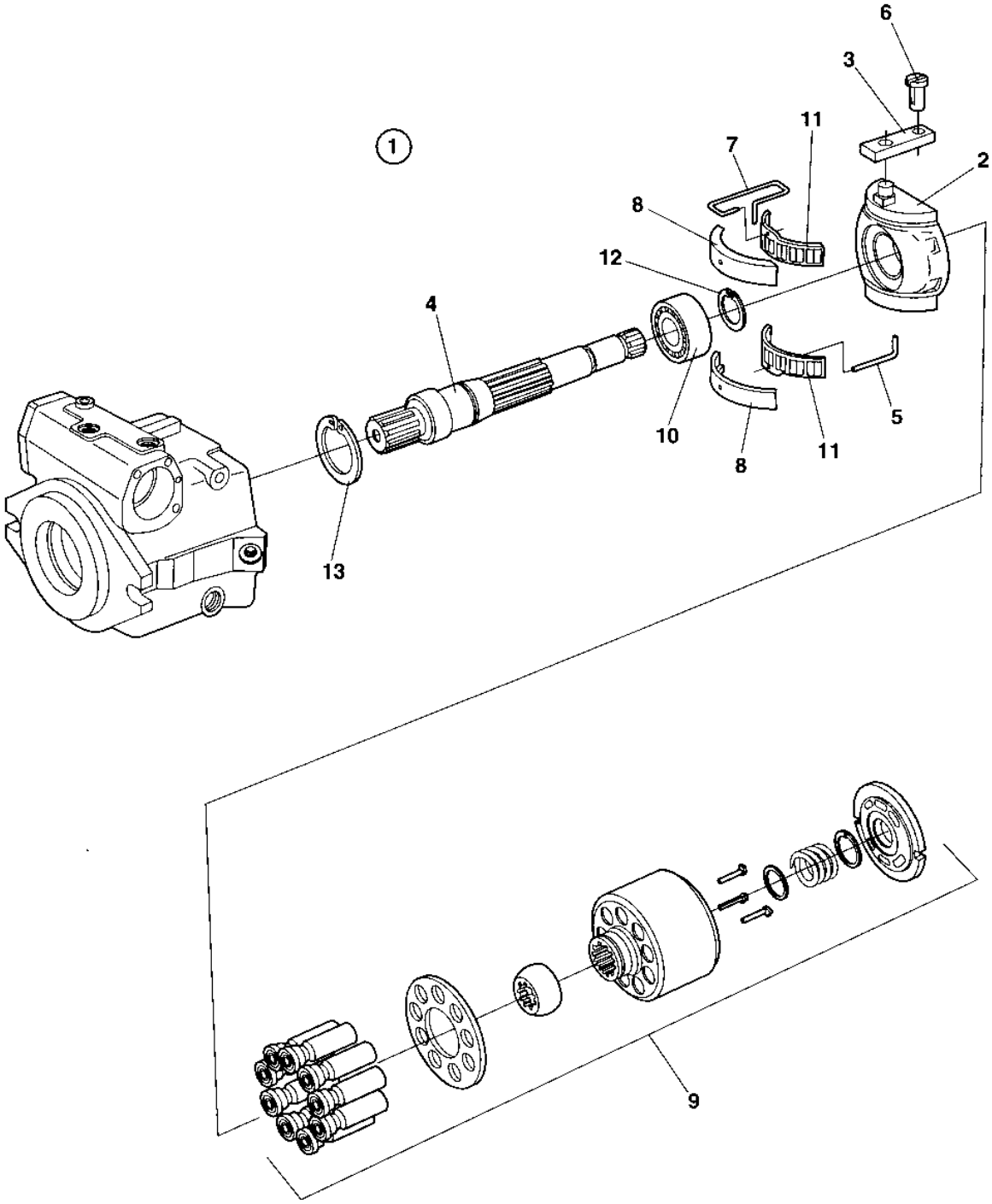

Item	Part No.	Name	Qty	L	SN INFO
1	-	Rotating group	1		
2	--	Cradle	1		
3	4700937174	Slide ring	1		
4	--	Shaft	1		
5	4700936621	Wire	1		
6	4700935164	Pin	1		
7	4700937175	Wire	1		
8	--	Bearing liner	1		
9	--	Cylinder with pistons, cpl	1		
10	4700937185	Bearing	1		
11	4700937186	Cradle bearing assembly, 1 set	1		
12	4700937187	Retaining ring	1		
13	4700937188	V-ring	1		

4812155786 Hydraulic pump Valve block, cpl

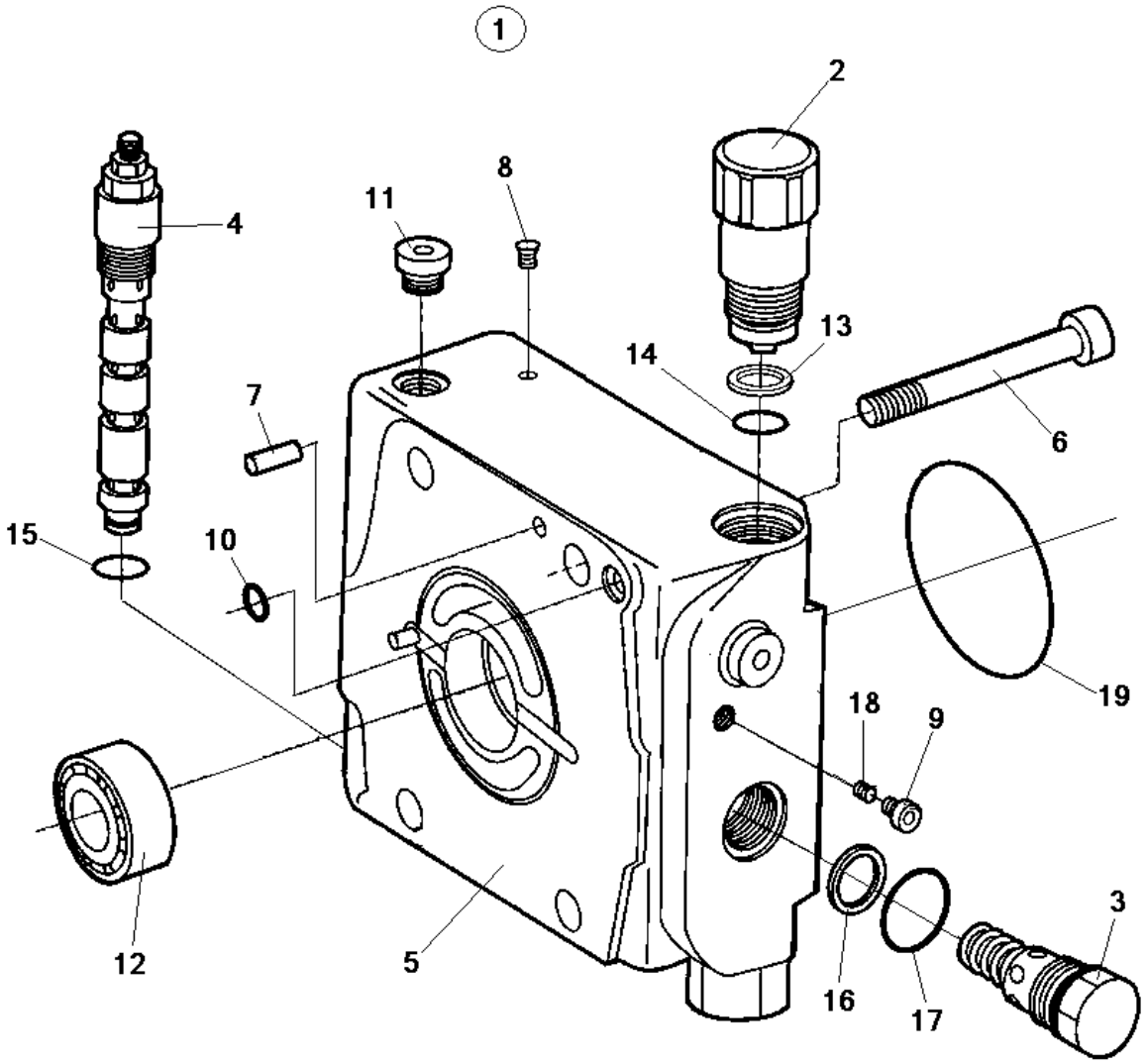

Item	Part No.	Name	Qty	L	SN INFO
1	-	Valve block, cpl	1		
2	--	Pressure relief valve, cpl	2		
3	--	Locking set, cpl	1		
4	--	Pressure override valve, cpl	1		
5	--	Housing	1		
6	--	Screw	4		
7	4700937987	Cylindric pin	2		
8	4700909514	Double break-off pin	6		
9	4700936855	Locking screw	1		
10	4700909469	O-ring	1		
11	4700902625	Plug	2		
12	--	Roller bearing	1		
13	4700936673	Back-up ring	2		
14	4700927278	O-ring	2		
15	4700936392	O-ring	1		
16	--	Sealing ring	1		
17	--	O-ring	1		
18	4700936313	Orifice	1		
19	--	O-ring	1		

4812155787 Hydraulic pump 4812155787 Hydraulic pump

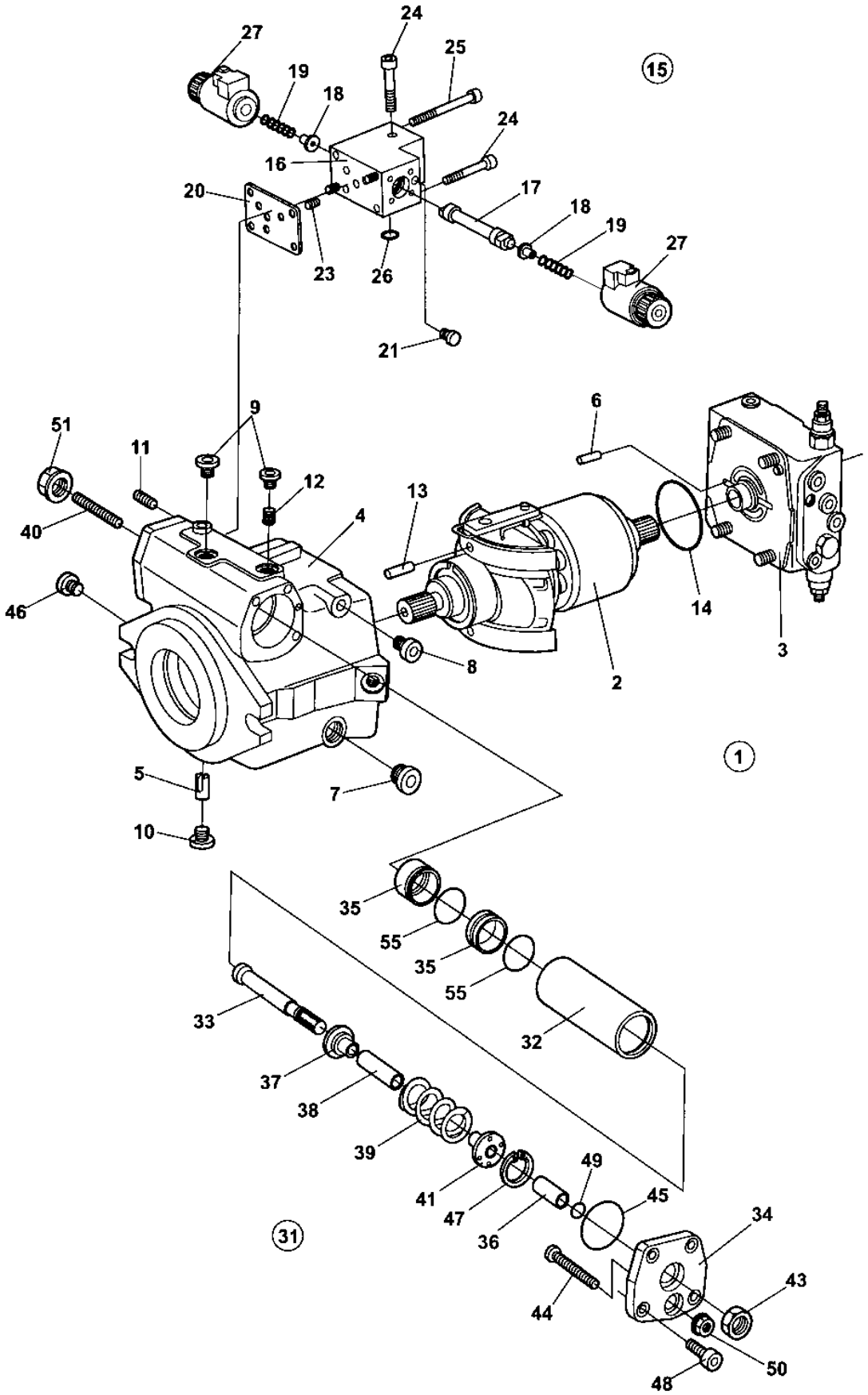

Item	Part No.	Name	Qty	L	SN INFO
1	4812155787	Hydraulic pump, vibration	1		
1	4700950461	Seal kit	1		
2	--	Rotary group, cpl	1		
3	--	Valve block, cpl	1		
4	--	Housing	1		
5	4700935158	Pin	1		
6	4700936869	Cylindrical pin	1		
7	4700935219	Plug	1	1	
8	4700902724	Plug	1	1	
9	4700902625	Plug	3	1	
10	4700902624	Screw	1	1	
11	4700909514	Double break-off pin	1		
12	4700936308	Orifice	2		
13	4700902792	Pin	2		
14	4700937206	O-ring	1	1	
15	4812160394	Control valve, cpl	1		
16	---	Housing	1		
17	---	Piston	1		
18	4700945776	Spring collar	2		
19	4700936686	Spring	2		
20	---	Washer	1	1	
21	---	Pin	2		
23	4700909514	Double break-off pin	1		
24	4700927358	Screw	3		
25	4700908383	Screw	2		
26	---	O-ring	1	1	
27	4812156152	Solenoid	2		
31	--	Hydraulic control, cpl	1		
32	---	Piston	1		
33	---	Rod	1		
34	---	Cover	1		
35	---	Guide Ring	1		
36	---	Ring	1		
37	---	Spring collar	1		
38	---	Bush	1		
39	---	Spring	1		
40	4700937195	Pin	1		
41	---	Spring collar	1		

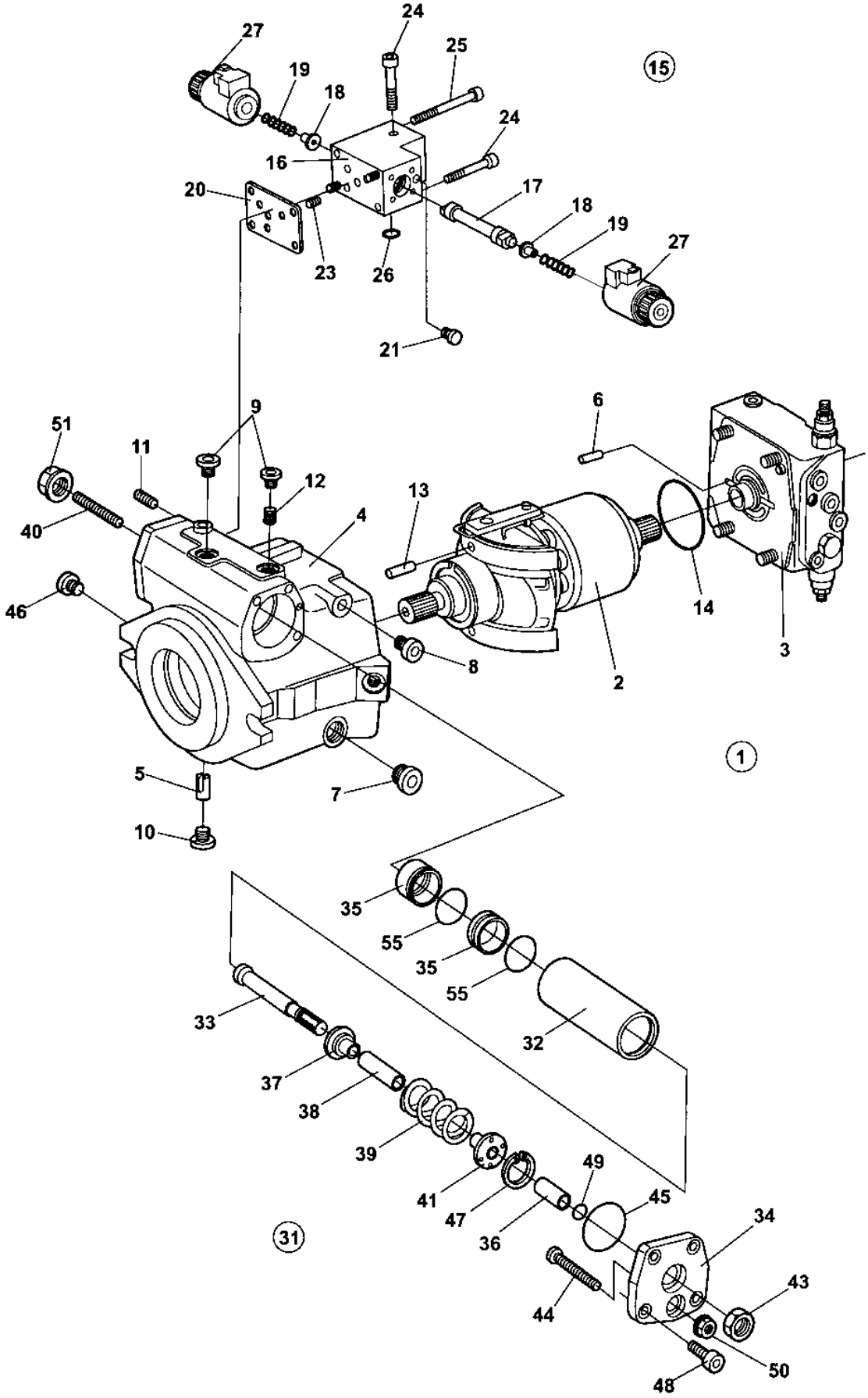
15
1
31
24
25
27
19
18
16
20
23
26
17
21
9
6
51
11
12
13
4
40
46
8
14
3
2
5
7
10
35
55
33
32
37
38
39
41
47
36
49
45
34
43
44
50
48

Item	Part No.	Name	Qty	L	SN INFO
43	4700937236	Nut	1		
44	4700937195	Pin	1		
45	---	O-ring	1	1	
46	4700902811	Plug	1		
47	---	Retaining ring	1		
48	4700902688	Screw	4		
49	4700936394	O-ring	1	1	
50	4700936393	Seal lock nut	1	1	
51	4700936393	Seal lock nut	1	1	
55	---	O-ring	2		

Comments for Page: 4812155787 Hydraulic pump

(L)OCAL REMARKS

1 | en_US | Included in seal kit, see item 1.

4812155787 Hydraulic pump Rotary group, cpl

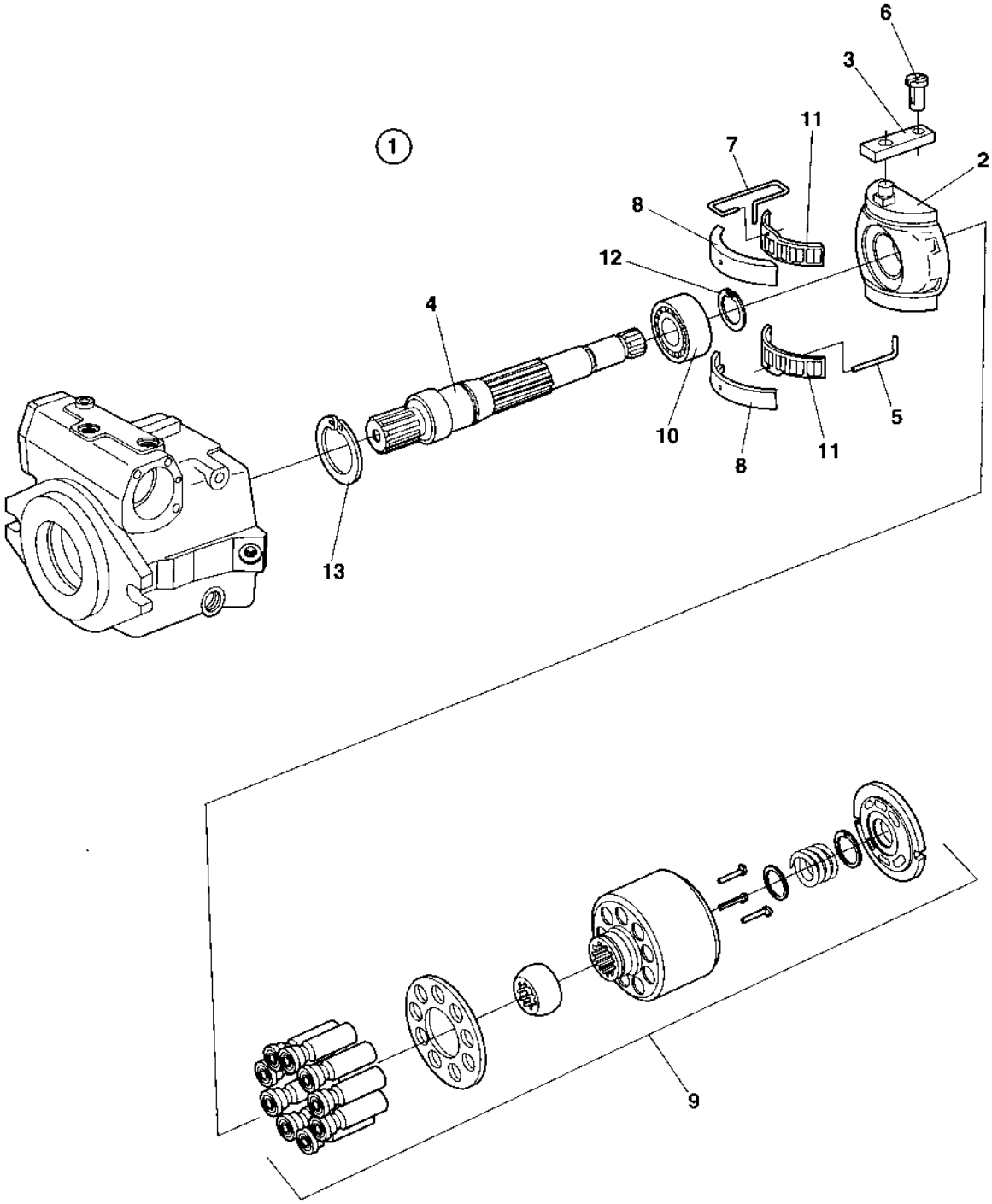

Item	Part No.	Name	Qty	L	SN INFO
1	-	Rotating group	1		
2	--	Cradle	1		
3	4700937174	Slide ring	1		
4	--	Shaft	1		
5	4700936621	Wire	1		
6	4700935164	Pin	1		
7	4700937175	Wire	1		
8	4700937182	Bearing liner, 1 pair	1		
9	4812159754	Cylinder with pistons, cpl	1		
10	4700937185	Bearing	1		
11	4700937186	Cradle bearing assembly, 1 set	1		
12	4700937187	Retaining ring	1		
13	4700937188	V-ring	1		

4812155787 Hydraulic pump Valve block, cpl

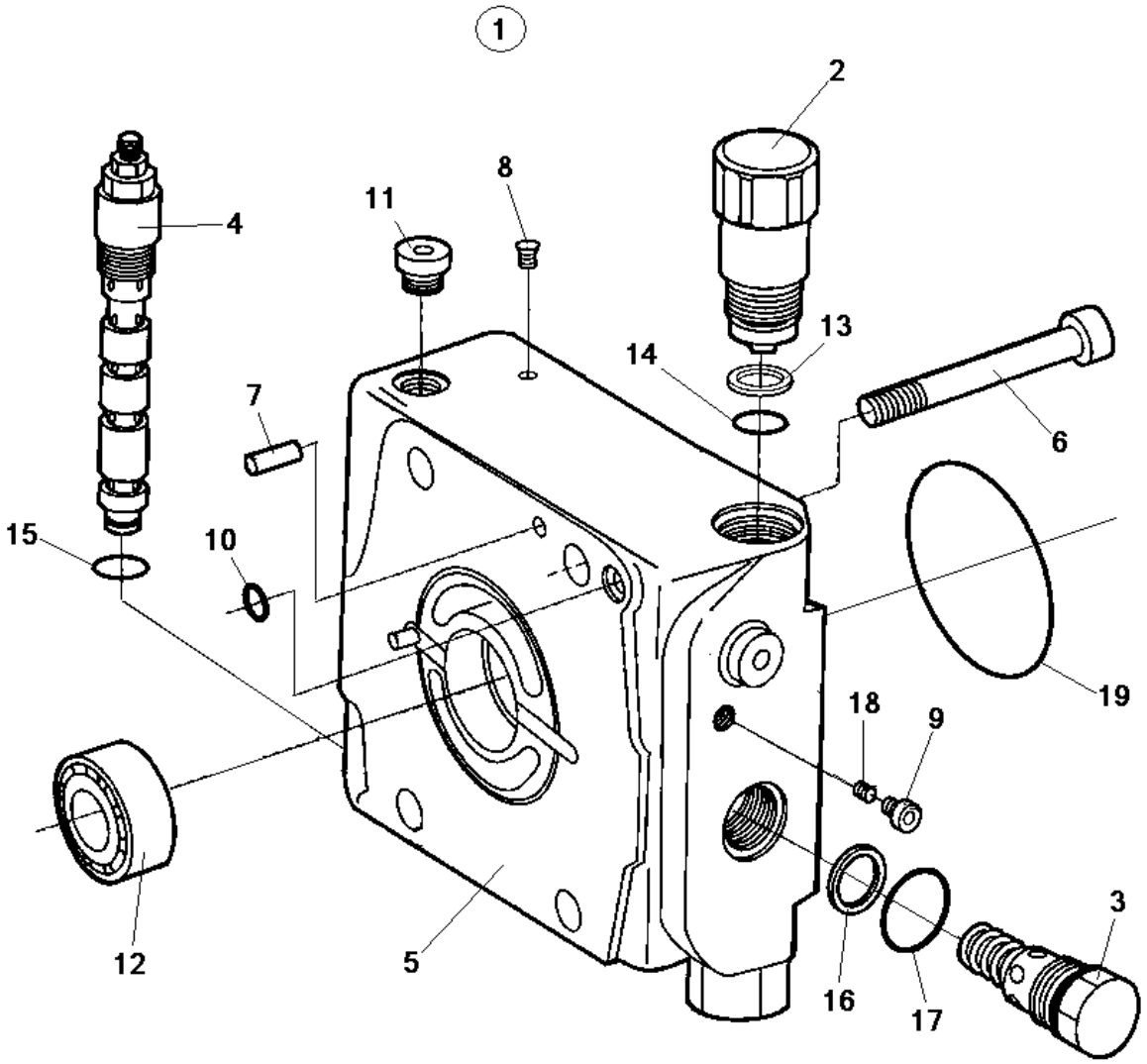

Item	Part No.	Name	Qty	L	SN INFO
1	-	Valve block, cpl	1		
2	--	Pressure relief valve, cpl	2		
3	--	Locking set, cpl	1		
4	--	Pressure override valve, cpl	1		
5	--	Housing	1		
6	--	Screw	4		
7	4700937987	Cylindric pin	2		
8	4700909514	Double break-off pin	6		
9	4700936855	Locking screw	1		
10	4700909469	O-ring	1		
11	4700902625	Plug	2		
12	--	Roller bearing	1		
13	4700936673	Back-up ring	2		
14	4700927278	O-ring	2		
15	4700936392	O-ring	1		
16	--	Sealing ring	1		
17	--	O-ring	1		
18	4700936313	Orifice	1		
19	--	Not valid for this model	1		

Hydraulic pump module, Std From 022080, Eco From 021551 Hydraulic pump & connectors

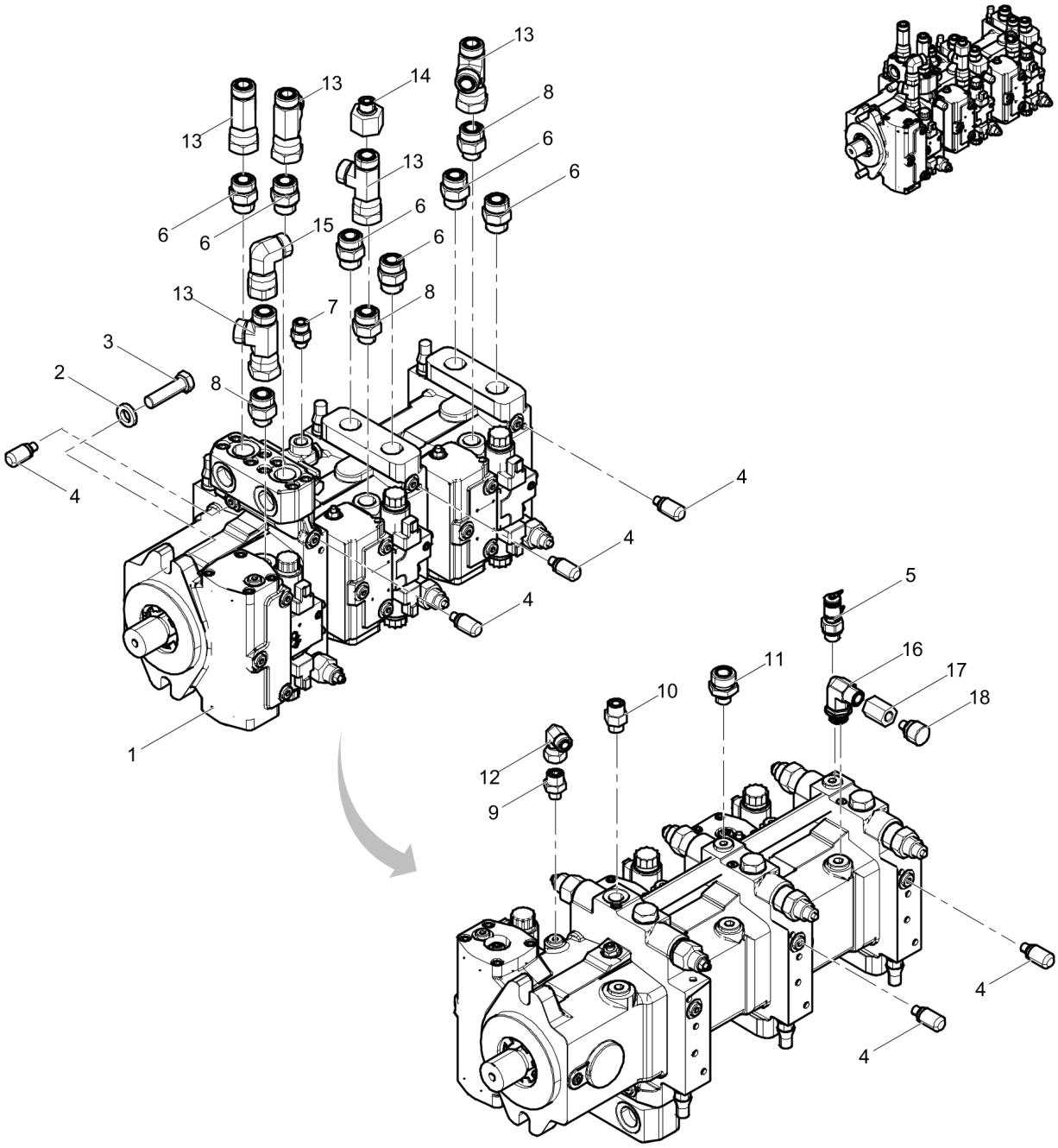

Item	Part No.	Name	Qty	L	SN INFO
1	4812126758	Hydraulic pump	1		From A022080
1	4812126760	Hydraulic pump, Eco	1		From A021551
2	4700904558	Washer, 17x30x6 mm 300 HV	2		
3	4700500270	Screw M16x60 10,9	2		
4	4700901157	Measuring nipple	6		
5	4812123305	Measuring fitting	1		
6	4700791853	Straight connector orfs	6		
7	4700792563	Straight connector	1		
8	4700792336	Straight connector orfs	3		
9	4700792115	Straight connector	1		
10	4700791412	Straight o-ring connector	1		
11	4812127660	Straight connector orfs	1		
12	4700791745	Elbow 90, O-ring with swivel	1		
13	4700904496	Adapter	5		
14	4700791791	Reducer	1		
15	4700904584	Connector elbow 90 ORFS	1		
16	4700792347	Connector elbow 90 orfs	1		
17	4812124035	Straight connector orfs	1		
18	4812116781	Oil filling plug	1		

Hydraulic system Hydraulic tank mounted

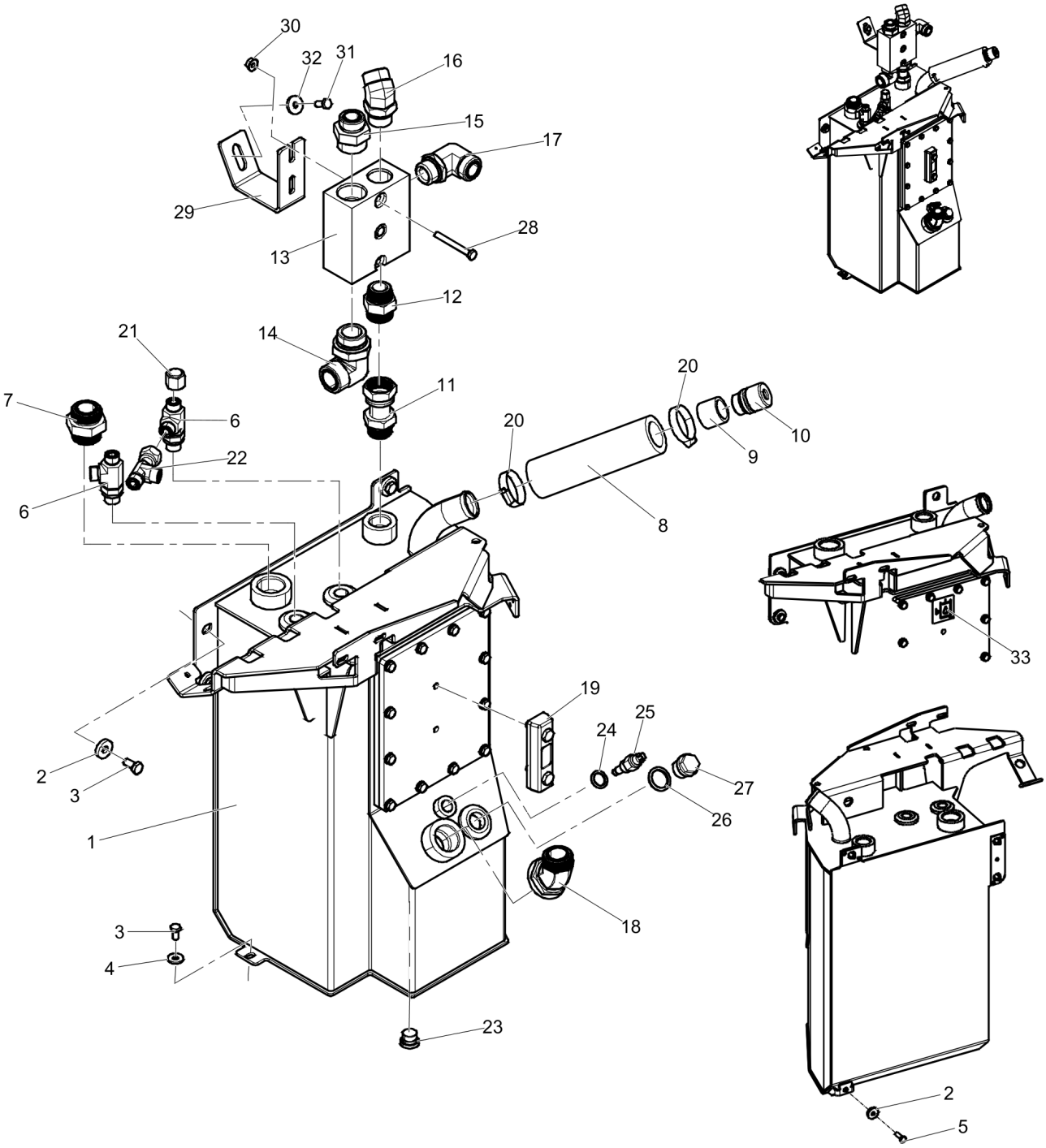

Item	Part No.	Name	Qty	L	SN INFO
1	4812123364	Hydraulic tank	1		
2	4700904734	Washer, 8.4x26x4 mm 300 HV	4		
3	4700500053	Screw, M8x20 mm 8.8 A2K	4		
4	4700904640	Washer, 8.4x22x3 mm 300HV	1		
5	4700500021	Screw, M8x25 mm 8.8 A2K	1		
6	4700791792	Tee-connector	2		
7	4812112555	Adapter	1		
8	4700387789	Hydraulic hose	1		
9	4700357139	Connector	1		
10	4700357138	Ventilating filter	1		
11	4812116625	Straight connector Orfs	1		
12	4700792339	Adapter	1		
13	4812121973	Hydraulic block	1		
14	4812121972	Connector elbow	1		
15	4812121971	Straight connector ORFS	1		
16	4700791212	Adapter	1		
17	4700792299	Adapter	1		
18	4812119662	Adapter	1		
19	4700989151	Oil level glass	1		
20	4700313008	Hose clamp	2		
21	4700791851	Plug ORFS	1		
22	4700791798	Adapter	1		
23	4812123298	Plug	1		
24	4700162015	Seal ring	1		
25	4700792276	Temperature sensor	1		
26	4700791120	Washer sealing	1		
27	4700232039	Steel plug threaded	1		
28	4700500189	Screw	2		
29	4812124552	Bracket	1		
30	4700903586	Nut, M8x1.25 mm A2K	2		
31	4700500053	Screw, M8x20 mm 8.8 A2K	1		
32	4700904734	Washer, 8.4x26x4 mm 300 HV	1		
33	4700272373	Decal, hydraulic oil level	1		

Hydraulic system Propulsion system

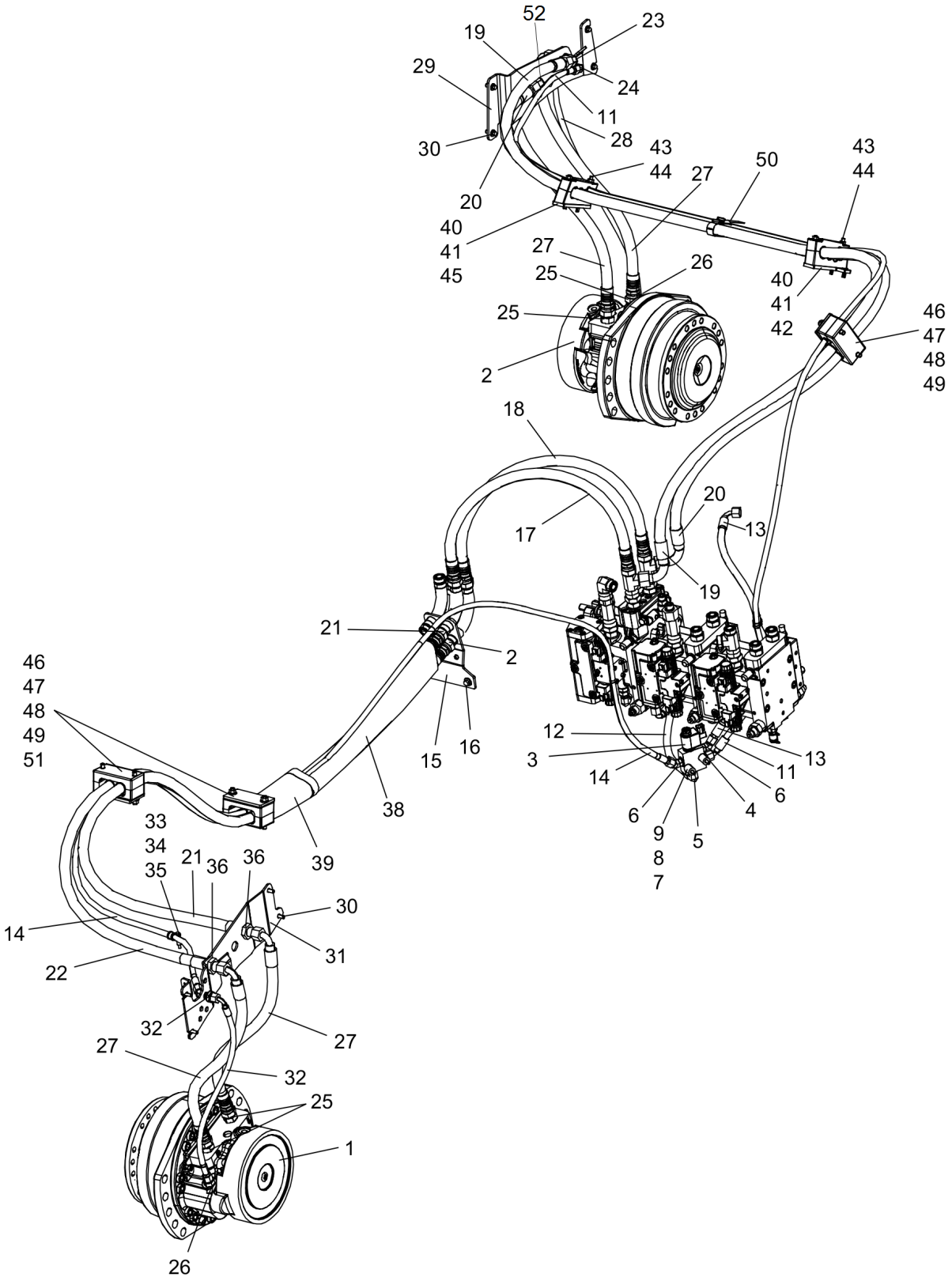

Item	Part No.	Name	Qty	L	SN INFO
1	4812123057	Hydraulic motor	1		
2	4812123058	Hydraulic motor	1		
3	4812123055	Hydraulic valve	1		
4	4700791409	Straight connector orfs	1		
5	4700791846	Adapter	1		
6	4700792658	Elbow 45°	2		
7	4700355704	Spacer sleeve	2		
8	4700904228	Washer 6,4x12x1,5	2		
9	4700500089	Screw M6x70	2		
10	4700313041	Cable ties	1		
11	4812124049	Hydraulic hose	1		
12	4812127665	Hydraulic hose	1		
13	4812123966	Hydraulic hose	1		
14	4812124755	Hydraulic hose	1		
15	4812124527	Pipe assembly	1		
16	4700500509	Screw, M10x25, 8.8	2		
17	4812124480	Hydraulic hose	1		
18	4812124481	Hydraulic hose	1		
19	4812124053	Hydraulic hose	1		
20	4812124054	Hydraulic hose	1		
21	4812124758	Hydraulic hose	1		
22	4812124759	Hydraulic hose	1		
23	4812123395	Bulkhead union elbow 90 ORFS	1		
24	4812122416	Elbow 45 orfs	1		
25	4700791823	Adapter	4		
26	4700791547	Straight connector orfs	2		
27	4812123982	Hydraulic hose	4		
28	4812123984	Hydraulic hose	1		
29	4812123516	Holder	1		
30	4700500505	Screw, M8x20 mm 8.8 A2K	4		
31	4812124823	Holder	1		
32	4812124762	Hydraulic hose	1		
33	4812122416	Elbow 45 orfs	1		
34	4812115581	Spacer sleeve	1		
35	4700921046	Clamp	1		
36	4700500504	Hexagon screw with flange	1		
37	4700792453	Nut	2		
38	4812110272	Hose guard	1		

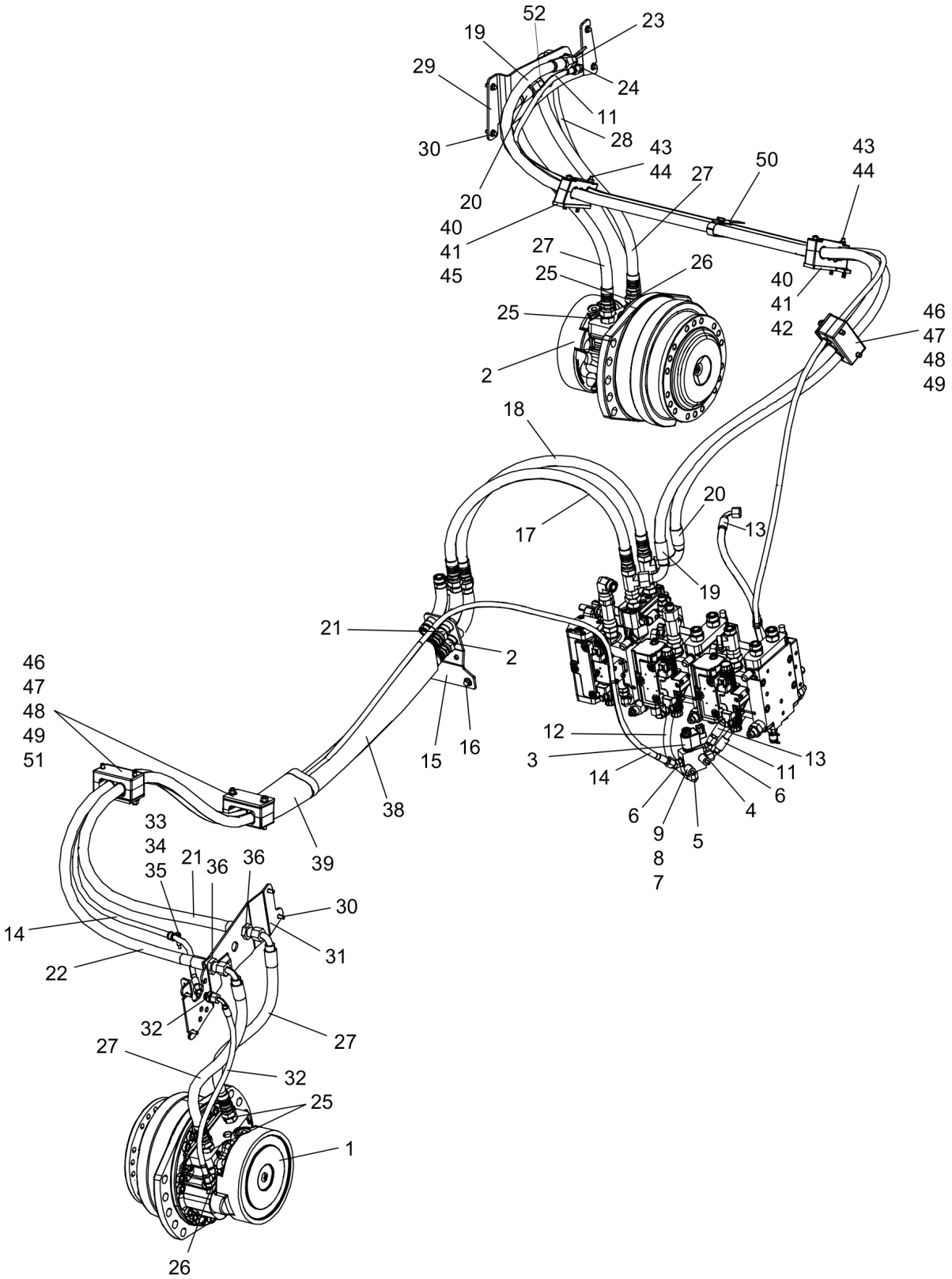
52
23
19
29
24
11
28
30
43
44
27
50
43
44
20
40
41
45
27
25
26
40
41
42
25
46
47
48
49
2
18
20
17
13
19
21
2
46
47
48
49
51
12
3
14
15
16
13
11
6
4
6
9
8
7
5
38
39
33
34
35
21
36
36
30
14
31
22
32
27
27
32
25
1
26

Item	Part No.	Name	Qty	L	SN INFO
39	4700792701	Hose guard	0,25		
40	4812123918	Holder plate	2		
41	4700513003	Screw	4		
42	4812123352	Hydraulic hose holder	1		
43	4700791860	Stud	4		
44	4700903586	Nut, M8x1.25 mm A2K	4		
45	4812123351	Hydraulic hose holder	1		
46	4700343872	Hose clamp	4		
47	4700904056	Stud	6		
48	4700335914	Cover plate	3		
49	4700792817	Hexagon nut with flange	6		
50	4700792061	Strap	1		
51	4700343732	Hose clamp	2		
52	4812123549	Bulkhead union elbow 45 ORFS	1		

Hydraulic system Vibration system

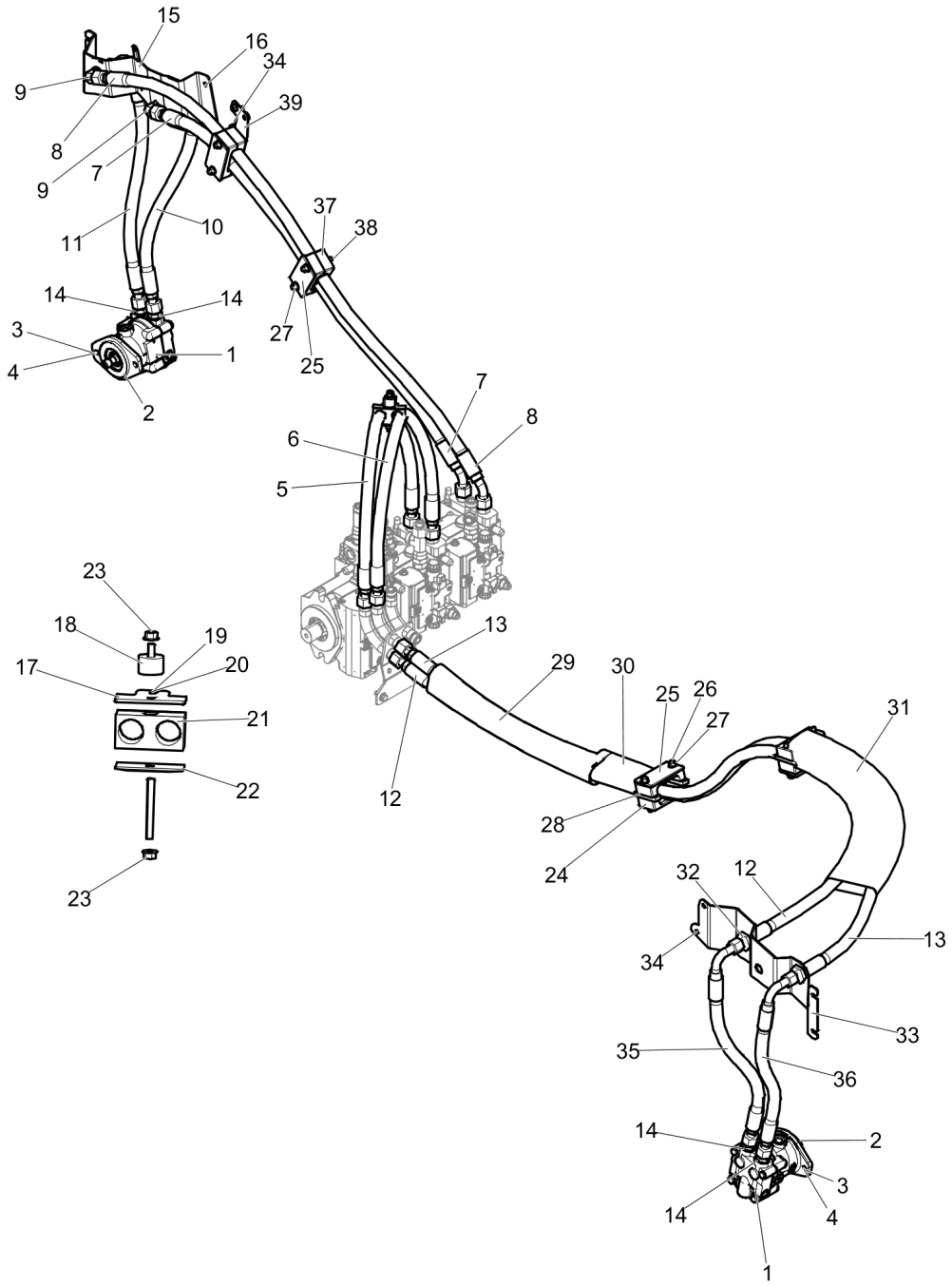

Item	Part No.	Name	Qty	L	SN INFO
1	4700395915	Hydraulic motor Vibration	2		
2	4700160279	O-ring 70	2		
3	4700500046	Hex. head screw M12x030H	4		
4	4700904213	Steel Plain Washer	4		
5	4812124478	Hydraulic hose	1		
6	4812124479	Hydraulic hose	1		
7	4812124009	Hydraulic hose	1		
8	4812124010	Hydraulic hose	1		
9	4700904787	Adapter	2		
10	4812123986	Hydraulic hose	1		
11	4812124026	Hydraulic hose	1		
12	4812125082	Hydraulic hose	1		
13	4812125083	Hydraulic hose	1		
14	4812115051	Straight connector orfs	4		
15	4812123515	Holder	1		
16	4700901832	Screw, M08x16, 8.8	4		
17	4812127393	Cover plate	1		
18	4700792114	Shock absorbers	2		
19	4700904229	Washer, 8.4x 6x1.5 mm 300HV	1		
20	4700500018	Hex. screw	1		
21	4812127612	Pipe clamp	1		
22	4700791712	Cover plate	1		
23	4700903586	Nut, M8x1.25 mm A2K	3		
24	4700343732	Hose clamp	4		
25	4700335914	Cover plate	4		
26	4700904629	Stud	4		
27	4700792817	Hexagon nut with flange	8		
28	4812124515	Rubber part	4		
29	4812110272	Hose guard	1		
30	4700792701	Hose guard	1		
31	4700792702	Hose guard	1		
32	4700904581	Bulkhead union	2		
33	4812124822	Bracket	1		
34	4700500505	Screw, M8x20 mm 8.8 A2K	6		
35	4812124763	Hydraulic hose	1		
36	4812124028	Hydraulic hose	1		
37	4700343872	Hose clamp	4		
38	4700904056	Stud	4		

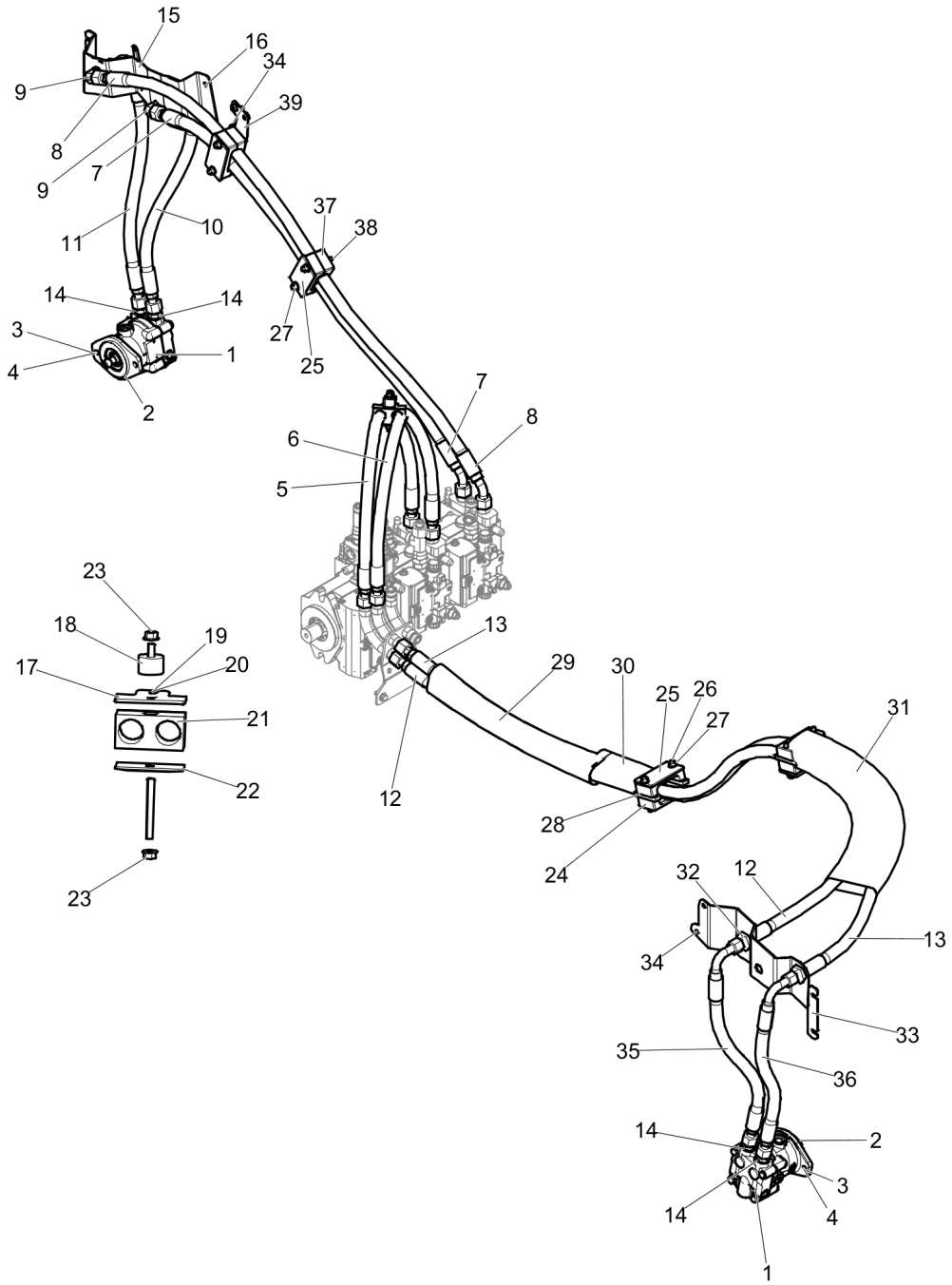
15
16
34
9
39
8
7
9
37
38
11
10
14
14
3
27
1
4
25
2
7
8
6
5
23
18
19
13
17
20
29
30
25
26
21
27
31
22
12
28
24
23
32
12
13
34
33
35
36
14
2
3
14
4
1

Item	Part No.	Name	Qty	L	SN INFO
39	4812126208	Bracket	1		

Hydraulic system 4700395915 Hydraulic motor Vibration

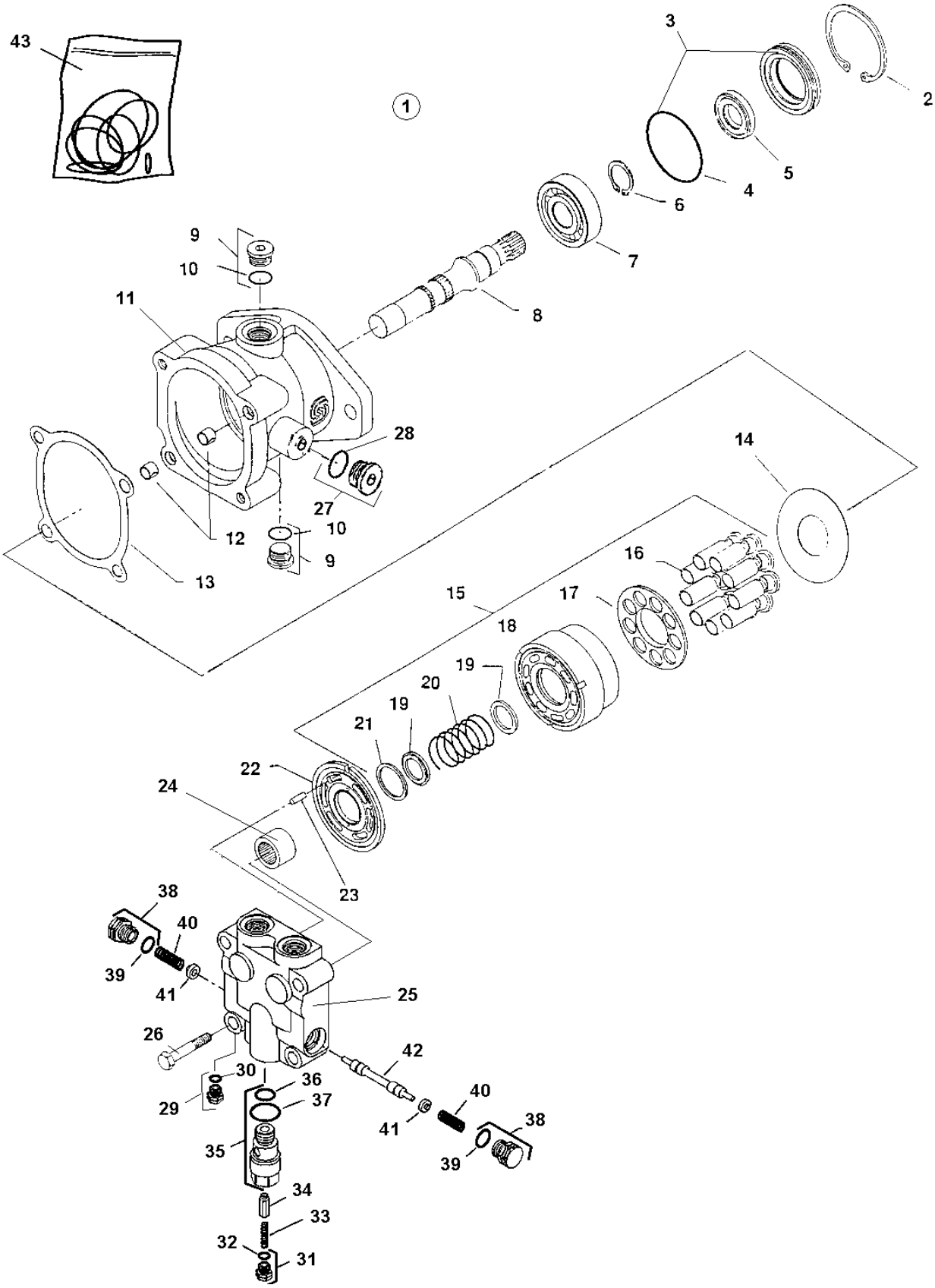

Item	Part No.	Name	Qty	L	SN INFO
1	4700395915	Hydraulic motor Vibration	1		
2	4700909356	Retaining ring	1		
3	--	Seal carrier	1		
4	4700909354	O-ring	1	A	
5	4700909335	Seal	1	A	
6	--	Retaining ring	1		
7	4700909352	Ball bearing	1		
8	4700909351	Shaft	1		
9	4700939333	Plug, cpl	2		
10	4700923090	O-ring	1	A	
11	4700909358	Housing	1		
12	4700909346	Pin	2		
13	4700909343	Gasket	1	A	
14	4700909336	Thrust plate	1		
15	4700950593	Cylinder block kit	1		
16	---	Piston	9		
17	4700909342	Retainer	1		
18	---	Cylinder block	1		
19	4700909338	Washer	2		
20	4700909339	Spring	1		
21	4700909340	Retaining ring	1		
22	4700909350	Valve plate	1		
23	--	Pin	1		
24	4700909344	Needle roller bearing	1		
25	--	End cap	1		
26	--	Screw	4		
27	4700909243	Plug	1		
28	4700813618	O-ring	1	A	
29	4700480354	Plug and O-ring	2		
30	4700813617	O-ring	1	A	
31	--	Plug, cpl	1		
32	4700910713	O-ring	1	A	
33	--	Lock Nut	1		
34	--	Poppet	1		
35	4812156199	Adapter plug	1		
36	4700923087	O-ring	1	A	
37	---	O-ring	1	A	
38	--	Plug, cpl	2		

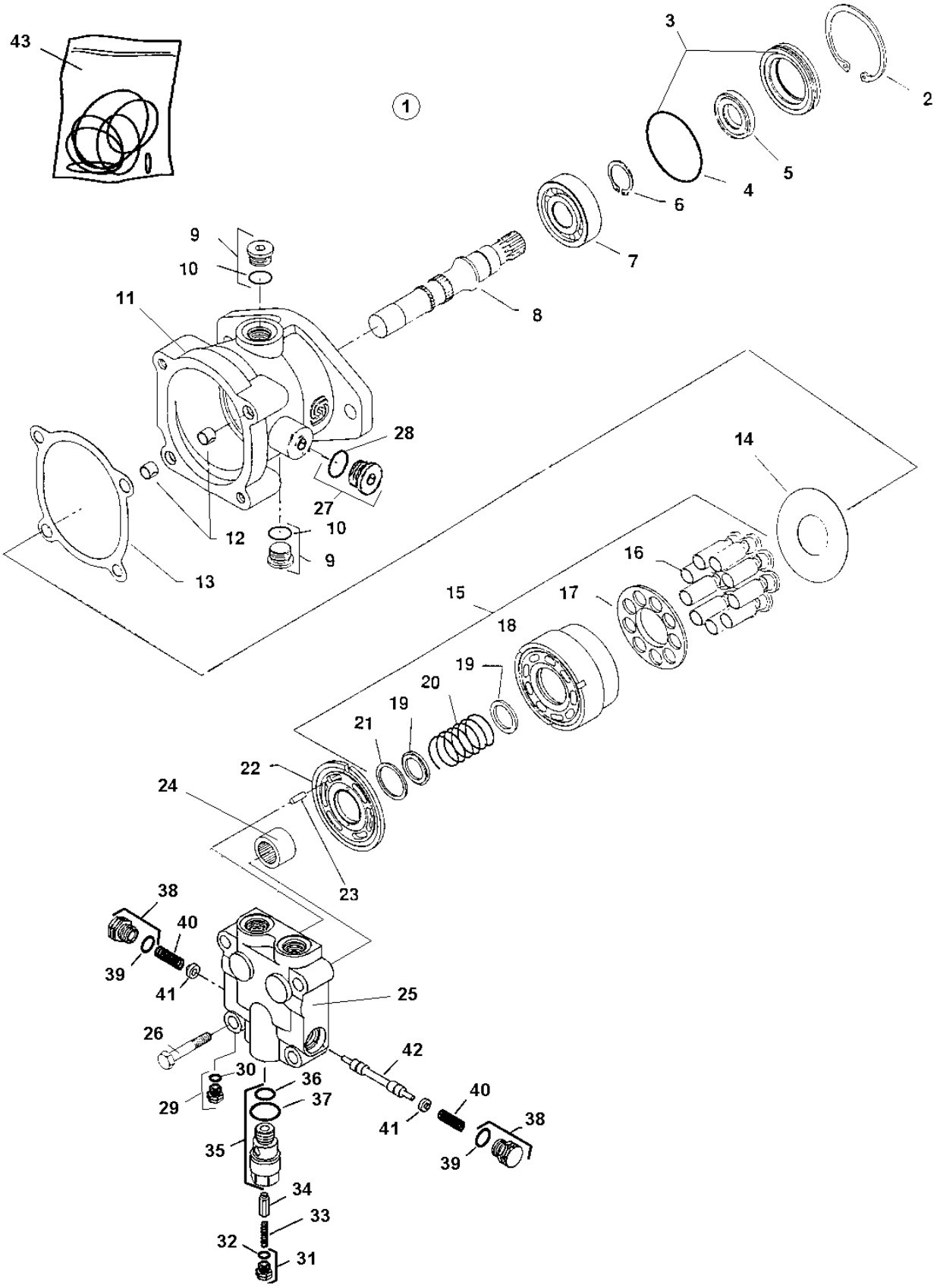
43
1
3
2
5
4
6
7
9
10
11
8
28
14
27
10
12
9
13
16
15
17
18
19
20
19
21
22
24
23
38
40
39
41
25
26
42
30
36
29
37
40
41
38
39
35
34
33
32
31

Item	Part No.	Name	Qty	L	SN INFO
39	4700923087	O-ring	1	A	
40	--	Lock Nut	1		
41	--	Shuttle spool	1		
42	--	Lock Nut	1		
43	4700950297	Seal kit	1		

Comments for Page: 4700395915 Hydraulic motor Vibration

(L)OCAL REMARKS

A | en_US | Included in seal kit, item 43.

Hydraulic system Hydraulic offset steering

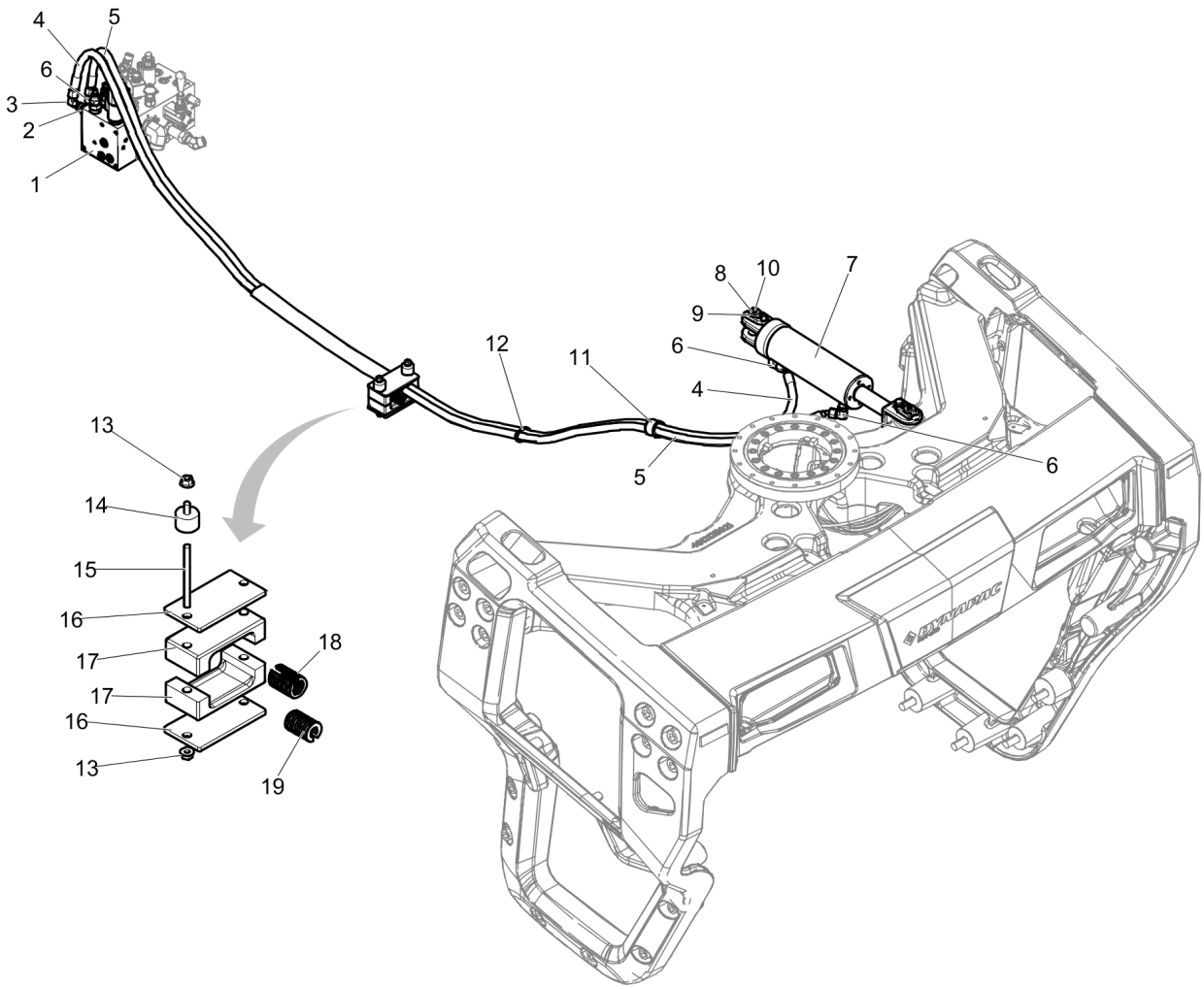

Item	Part No.	Name	Qty	L	SN INFO
1	4812123054	Hydraulic valve, offset	1		
2	4700791828	Adapter	1		
3	4700791401	Elbow 90, O-ring with swivel	1		
4	4812124766	Hydraulic hose	1		
5	4812124765	Hydraulic hose	1		
6	4700791840	Adapter	3		
7	4812123052	Hydraulic cylinder	1		
8	4700500051	Hex. screw	2		
9	4700904231	Washer, 13x24x2 mm 300 HV	2		
10	4700792073	Hose reinforced	2		
11	4700923008	Clamp	1		
12	4700313102	Cable ties	1		
13	4700903586	Nut, M8x1.25 mm A2K	4		
14	4700792114	Shock absorbers	2		
15	4700791849	Stud m	2		
16	4700335914	Cover plate	2		
17	4700373432	Absorbent, right hood	2		
18	4700396657	Hose clamp	1		
19	4700396656	Hose clamp	1		

Hydraulic system 4812123052 Hydraulic cylinder

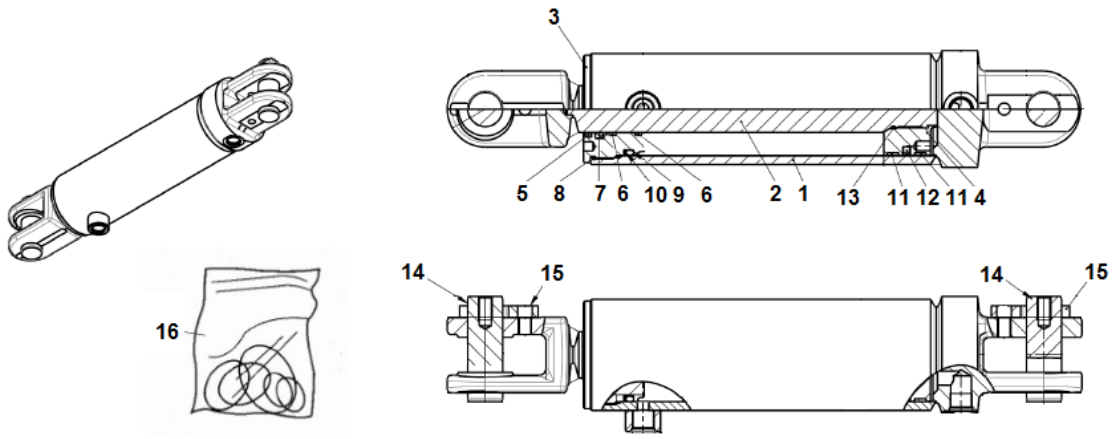

Item	Part No.	Name	Qty	L	SN INFO
1	-	Cylinder pipe	1		
2	-	Piston rod	1		
3	-	Guide block	1		
4	-	Piston	1		
5	4812157568	Scraper	1		
6	-	Guide ring	2		
7	4812157569	Rod seal	1		
8	4812160887	O-ring	1		
9	4812160885	O-ring	1		
10	4812160886	Backup ring	1		
11	4812160889	Guide ring	2		
12	4812160890	Piston seal	1		
13	-	O-ring	1		
14	-	Pin	2		
15	4812157572	Locking bracket	2		
16	4812161591	Seal kit	1		

Comments for Page: 4812123052 Hydraulic cylinder

16 - Seal kit includes items 5 to 13.

Hydraulic system Hydraulic system, fan & steering

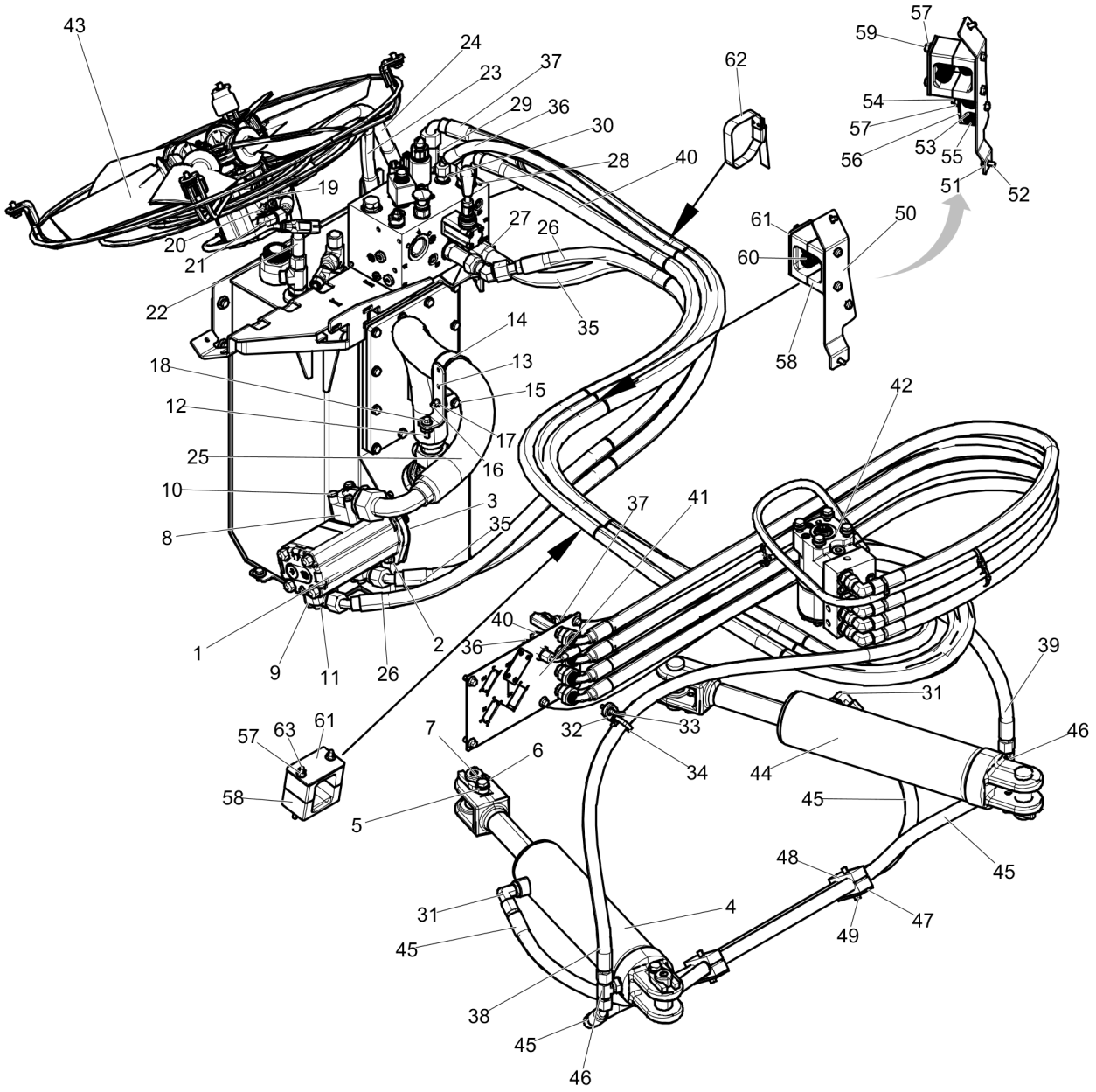

Item	Part No.	Name	Qty	L	SN INFO
1	4812121938	Hydraulic pump, steering	1		
1	4812121940	Hydraulic pump, steering ECO	1		
2	4812115511	Gasket	1		
3	4700791343	Screw	2		
4	4812123051	Hydraulic cylinder	1		
5	4700904231	Washer, 13x24x2 mm 300 HV	4		
6	4700500051	Hex. screw	4		
7	4700792083	Plug	4		
8	4812119629	Flange connector 90	1		
9	4812113633	Flange connector	2		
10	4700500067	Screw	4		
11	4700508048	Hexagon socket head cap screw M	8		
12	4700388446	Spacer	1		
13	4812112530	Bracket	1		
14	4700904352	Clamp	1		
15	4700904735	Steel plain washer	1		
16	4700500075	Screw, M6-1,0x25 mm 8.8	1		
17	4700902285	Nut	1		
18	4700500506	Screw, M8x30 mm 8.8 A2K	1		
19	4812113633	Flange connector	2		
20	4700508048	Hexagon socket head cap screw M	8		
21	0570704101	Connector Elbow 90	1		
22	4812123932	Hydraulic hose	1		
23	4812123933	Hydraulic hose	1		
24	4812123934	Hydraulic hose	1		
25	4812123935	Hydraulic hose	1		
26	4812123936	Hydraulic hose	1		
27	4700791823	Adapter	1		
28	4700791743	Straight connector orfs	1		
29	4700791821	Straight connector orfs	1		
30	4700791409	Straight connector orfs	1		
31	4700791841	Elbow 90 orfs	2		
32	4812117326	Cable tie holder	2		
33	4700500501	Screw M6x20	2		
34	4700313102	Cable ties	2		
35	4812123947	Hydraulic hose	1		
36	4812123948	Hydraulic hose	1		
37	4812123949	Hydraulic hose	1		

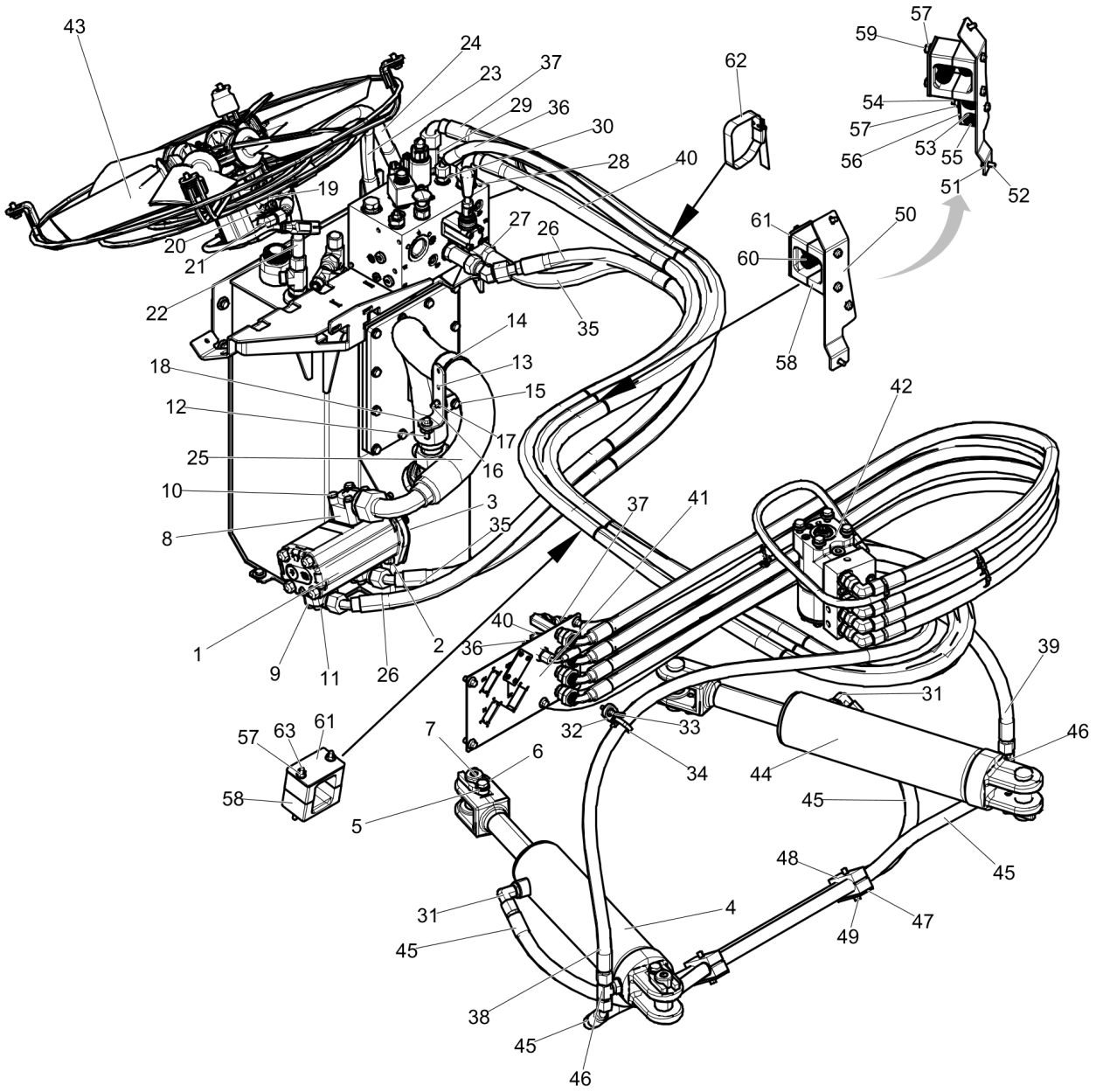
43
24
23
37
29
36
30
28
40
62
57
59
54
57
56
53
55
51
52
19
20
21
22
27
26
35
61
60
50
58
14
13
15
18
12
17
16
25
10
3
8
35
37
41
42
40
36
1
9
11
26
2
39
31
32
33
34
44
46
57
63
61
58
7
6
5
45
45
48
47
49
31
45
4
38
45
46

Item	Part No.	Name	Qty	L	SN INFO
38	4812123950	Hydraulic hose	1		
39	4812123951	Hydraulic hose	1		
40	4812123953	Hydraulic hose	1		
41		Hose bracket, cross sliding			
42	4812123056	Pilot valve, steering	1		
42	4700500028	Hex Head screw	4		
42	4700904557	Washer, 10.5x22x4 mm 300 HV	4		
43		Fan module			
44	4812123051	Hydraulic cylinder	1		
45	4812124209	Hydraulic hose	2		
46	4700792586	T-connector ORFS	2		
47	4700287294	Cover plate	2		
48	4700903456	Pipe clamp	2		
49	4700500508	Screw, M8x50 mm 8.8 A2K	2		
50	4812126259	Bracket	1		
51	4700904640	Washer, 8.4x22x3 mm 300HV	2		
52	4700500053	Screw, M8x20 mm 8.8 A2K	2		
53	4700791711	Pipe clamp	1		
54	4700791805	Stud	1		
55	4812113941	Hose holder clip	2		
56	4700791712	Cover plate	1		
57	4700903586	Nut, M8x1.25 mm A2K	5		
58	4812126245	Hose clamp	4		
59	4700792326	Stud	2		
60	4812113941	Hose holder clip	3		
61	4812126258	Plate	2		
62	4700792061	Strap	1		
63	4812125759	Stud	2		

Hydraulic system Fan module

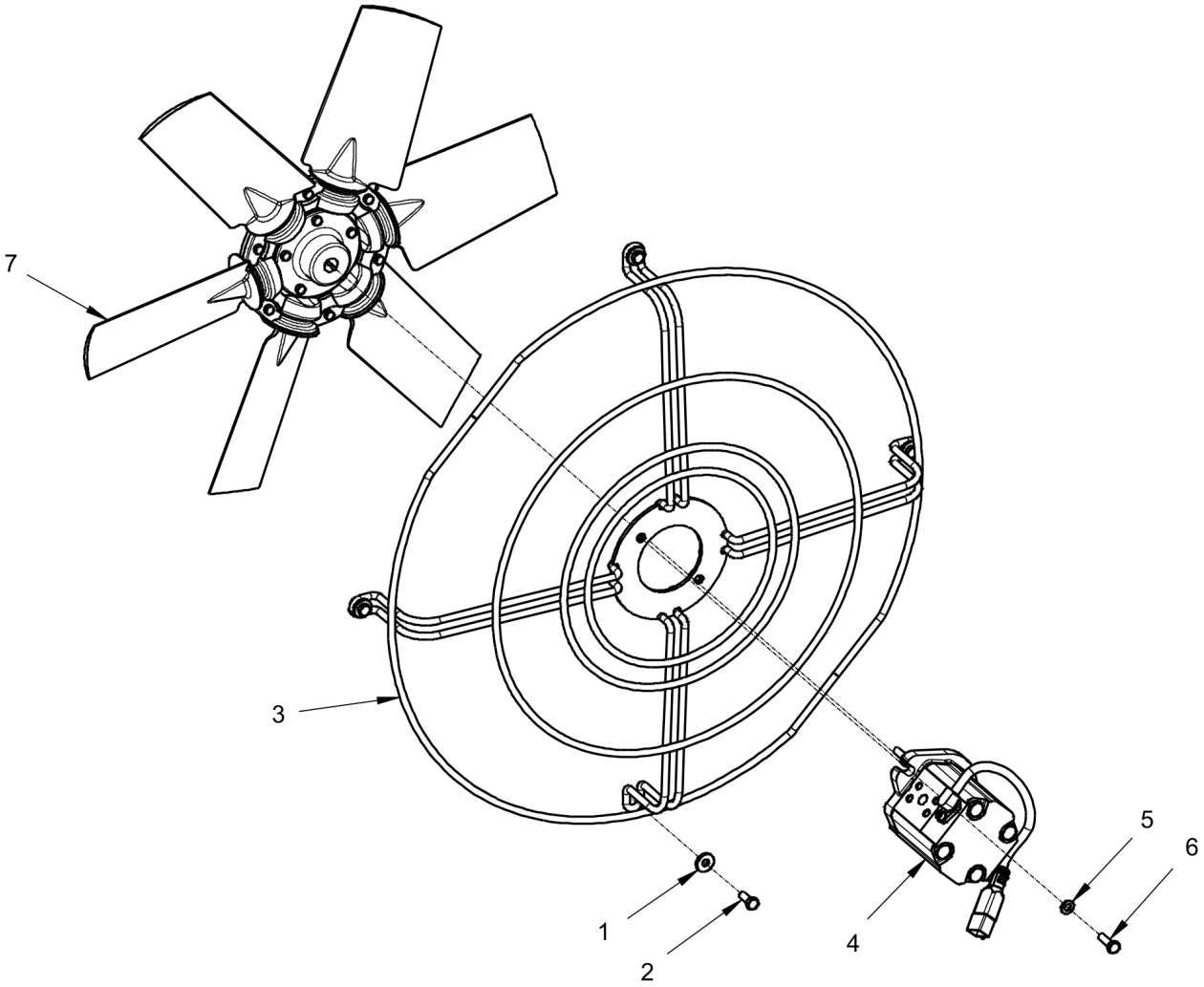

Item	Part No.	Name	Qty	L	SN INFO
1	4700904640	Washer, 8.4x22x3 mm 300HV	4		
2	4700500053	Screw, M8x20 mm 8.8 A2K	4		
3	4812127221	Bracket	1		
4	4812121764	Hydraulic motor	1		
5	4700904229	Washer, 8.4x 6x1.5 mm 300HV	2		
6	4700500021	Screw, M8x25 mm 8.8 A2K	2		
7	4812113679	Fan	1		

Hydraulic system Hose bracket, cross sliding

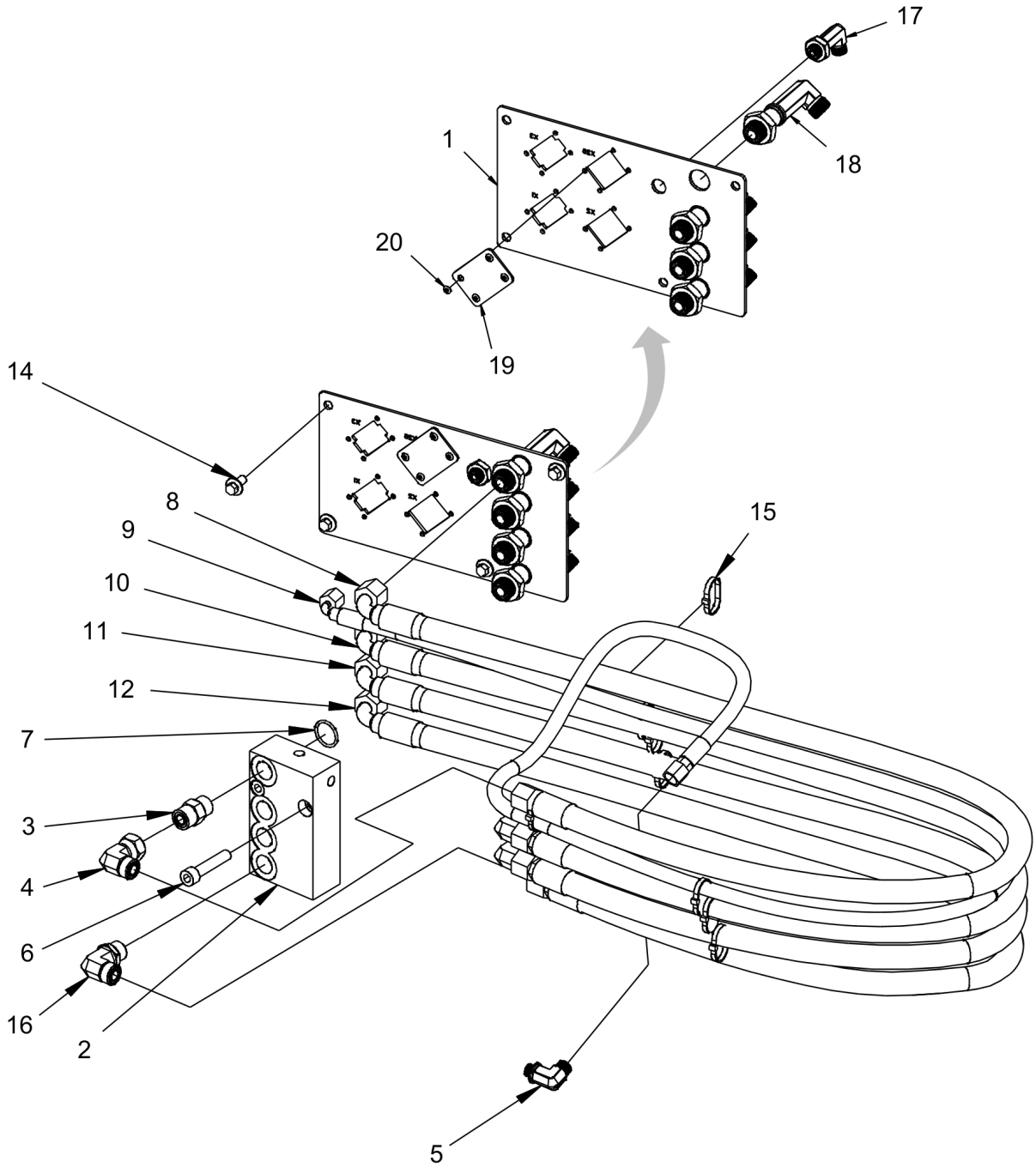

Item	Part No.	Name	Qty	L	SN INFO
1	4812122995	Connector holder	1		
2	4700370155	Valve block	1		
3	4700791799	Straight connector orfs	4		
4	4700791745	Elbow 90, O-ring with swivel	4		
5	4700792334	Elbow 90 orfs	1		
6	4700903773	Screw M10x1x50 8,8	2		
7	4700160287	O-ring	4		
8	4812124776	Hydraulic hose	1		
9	4812123922	Hydraulic hose	1		
10	4812124776	Hydraulic hose	1		
11	4812124776	Hydraulic hose	1		
12	4812124776	Hydraulic hose	1		
14	4700901832	Screw, M08x16, 8.8	4		
15	4700313041	Cable ties	N		
16	4700791841	Elbow 90 orfs	1		
17	4700792343	Adapter	1		
18	4700792342	Bulkhead elbow	4		
19	4812126960	Cover	1		
20	4700791709	Blind rivet	4		

Hydraulic system Brake system

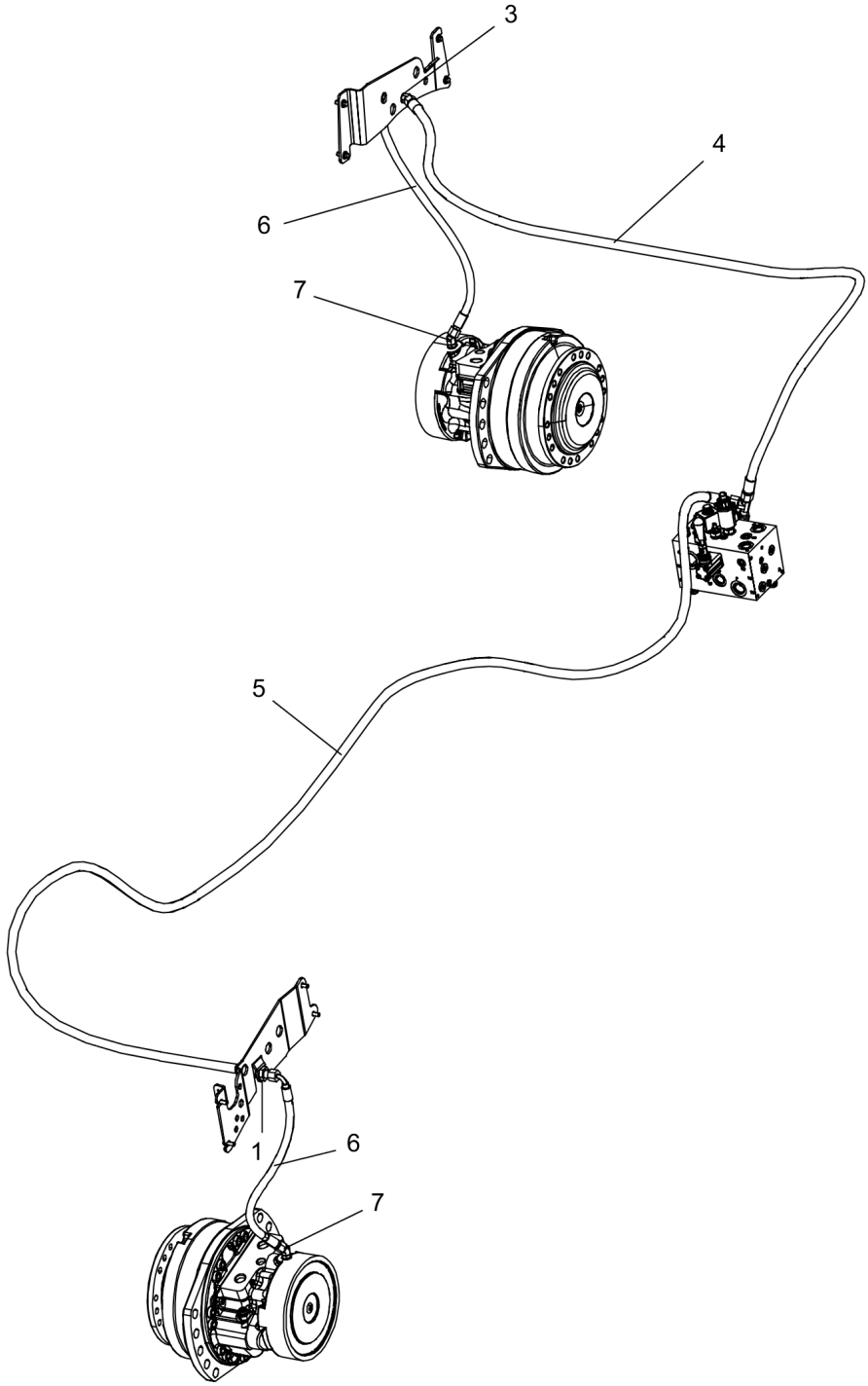

Item	Part No.	Name	Qty	L	SN INFO
1	4700792452	Nut	1		
3	4811000260	Bulkhead elbow 45 ORFS	1		
4	4812124058	Hydraulic hose	1		
5	4812124760	Hydraulic hose	1		
6	4812123983	Hydraulic hose	2		
7	4700792658	Elbow 45°	2		

Electric system Electric system, main harness

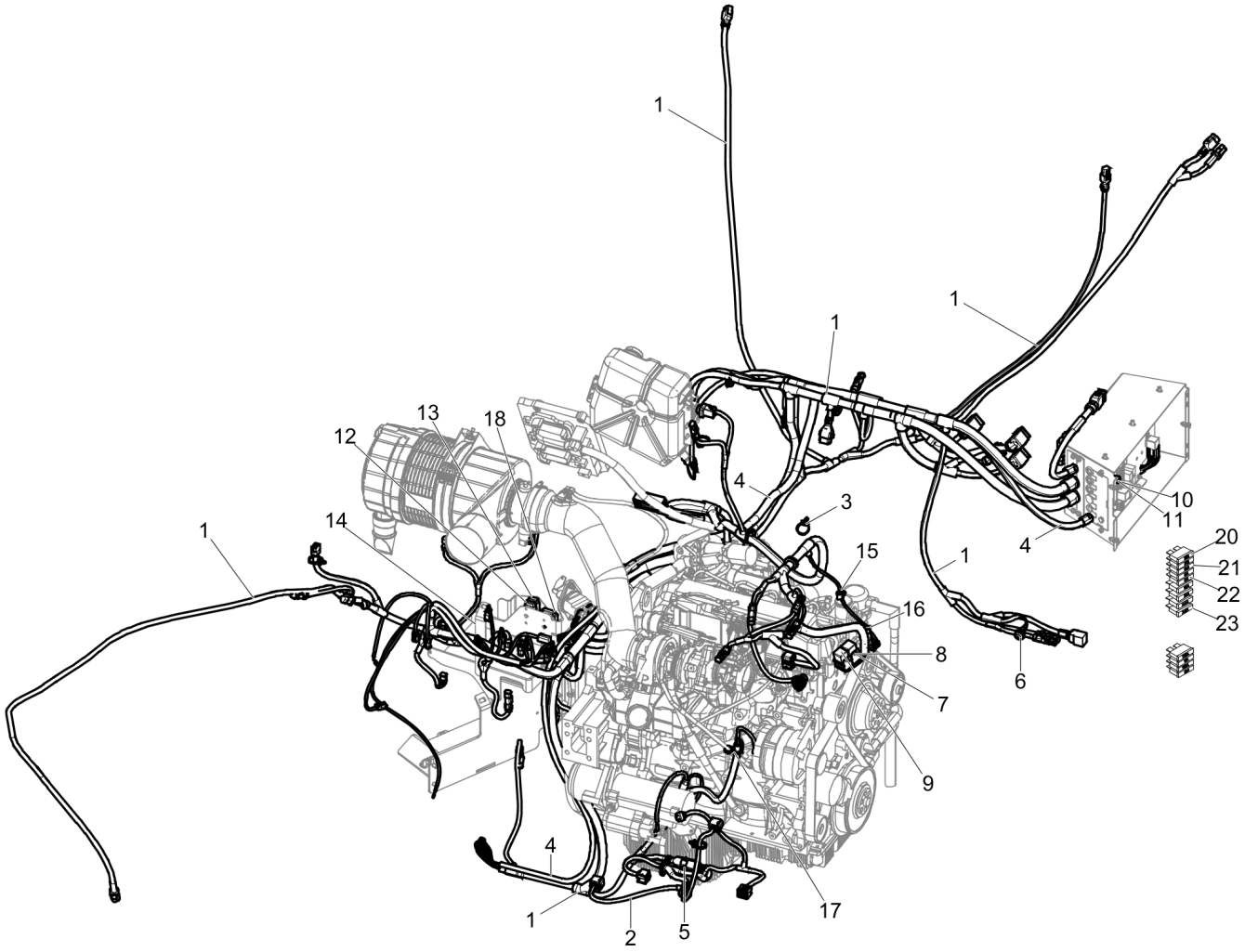

Item	Part No.	Name	Qty	L	SN INFO
1	4812122704	Cable harness, frame	1		
2	4812123115	Cable harness, after treatment	1		
3	4700792441	Cable tie with holder	9		
4	4812126109	Cable harness	1		
5	4700791709	Blind rivet	4		
6	4812120688	Push button	1		
7	4700904698	Plain washer	2		
8	4700925784	Screw	2		
9	4700792422	Relay 24V 20A	2		
10	4700904229	Washer, 8.4x 6x1.5 mm 300HV	1		
11	4700570005	Hexagon nut	1		
12	4700901225	Fuse 5A Tan	1		
13	4700901227	Fuse 10A Red	1		
14	4700904039	Fuse 50A Red	2		
15	4700792667	Cable tie holder	1		
16	4700792537	Cable tie with holder	1		
17	4700792686	Cable tie with holder	1		
18	4700904037	Fuse 30A Green	1		
20	4700901228	Fuse, 15A Blue	4		
21	4700901227	Fuse 10A Red	2		
22	4700901225	Fuse 5A Tan	3		
23	4700901226	Fuse 7.5A Brown	4		

Electric system Fuse and relay central module

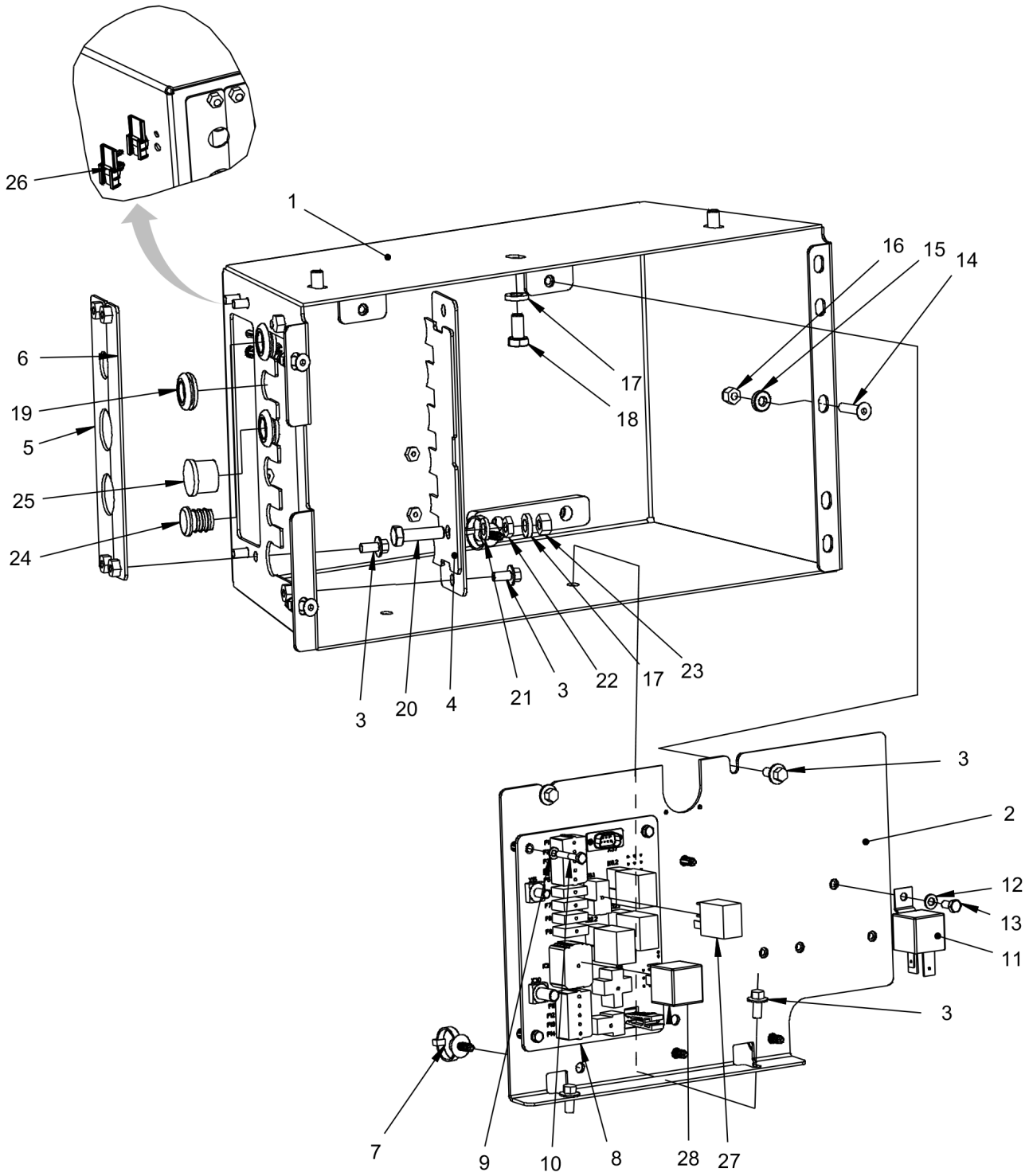

Item	Part No.	Name	Qty	L	SN INFO
1	4812125917	Fuse box	1		
2	4812125921	Mounting plate	1		
3	4700902989	Hexagon screw with flange M6x12	10		
4	4812125920	Cover plate	1		
5	4812125918	Cover plate	1		
6	4812125919	Cover plate	1		
7	4812115911	Cable tie with holder	9		
8	4812126176	Circuit board	1		
9	4700904698	Plain washer	4		
10	4700904312	Screw	4		
11	4812126106	Relay	1		
12	4700904281	Washer, 5,3x10x1 300HV	1		
13	4700500003	Hex. screw	1		
14	4700928784	Screw	3		
15	4700603001	Washer	3		
16	4700586002	Lock nut M6 -8	3		
17	4700904556	Steel plain washer 8,4x16x3,0	4		
18	4700500019	Hexagon screw	3		
19	4700904274	Grommet with membrane	3		
20	4700500022	Screw	1		
21	4700606004	Plastic washer	1		
22	4700573008	Nut M8	1		
23	4700570005	Hexagon nut	1		
24	4700901174	Plug	1		
25	4700282603	Plastic plug	1		
26	4812114873	Connector holder	2		
27	4812126279	Relay	4		
28	4812126105	Relay	1		

Electric system Ecu module

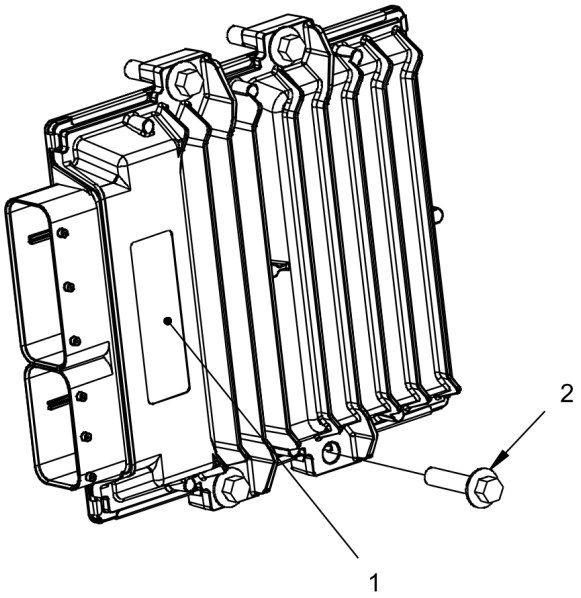

Item	Part No.	Name	Qty	L	SN INFO
1	4812123326	Control unit, main	1		
2	4700902147	Screw, M8x 5 mm 8.8	4		

Electric system Back-up alarm module

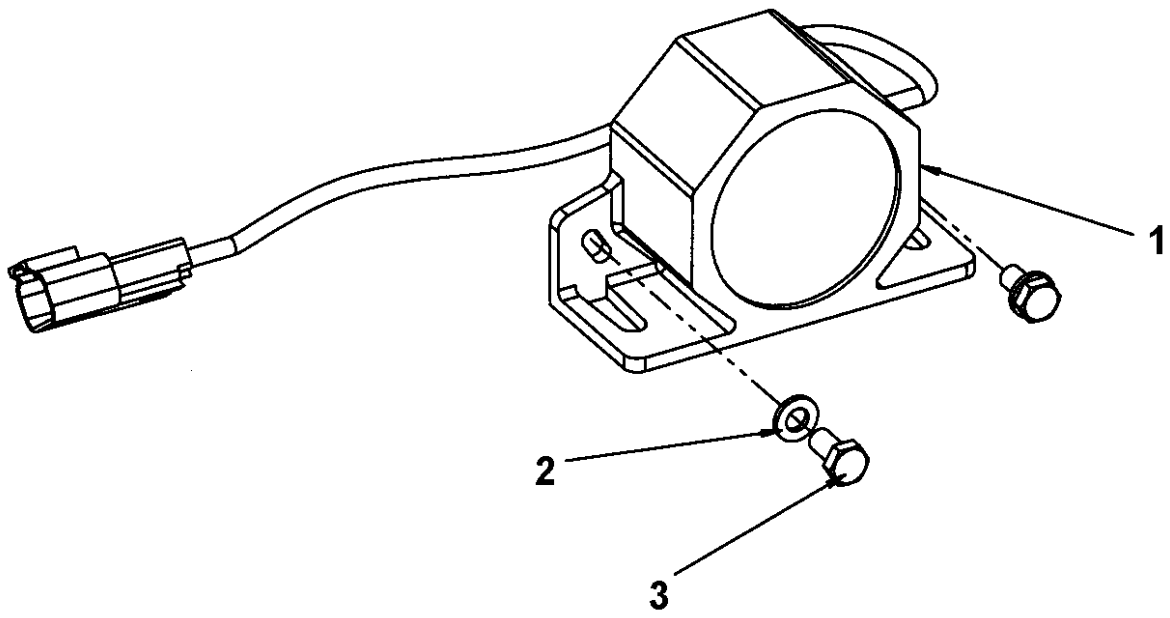

Item	Part No.	Name	Qty	L	SN INFO
1	4700904911	Back-up alarm	1		
2	4700904228	Washer 6,4x12x1,5	2		
3	4700500013	Screw, M6x16 mm 8.8 A2K	2		

Electric system Cable harnesses, speed, frequency and offset

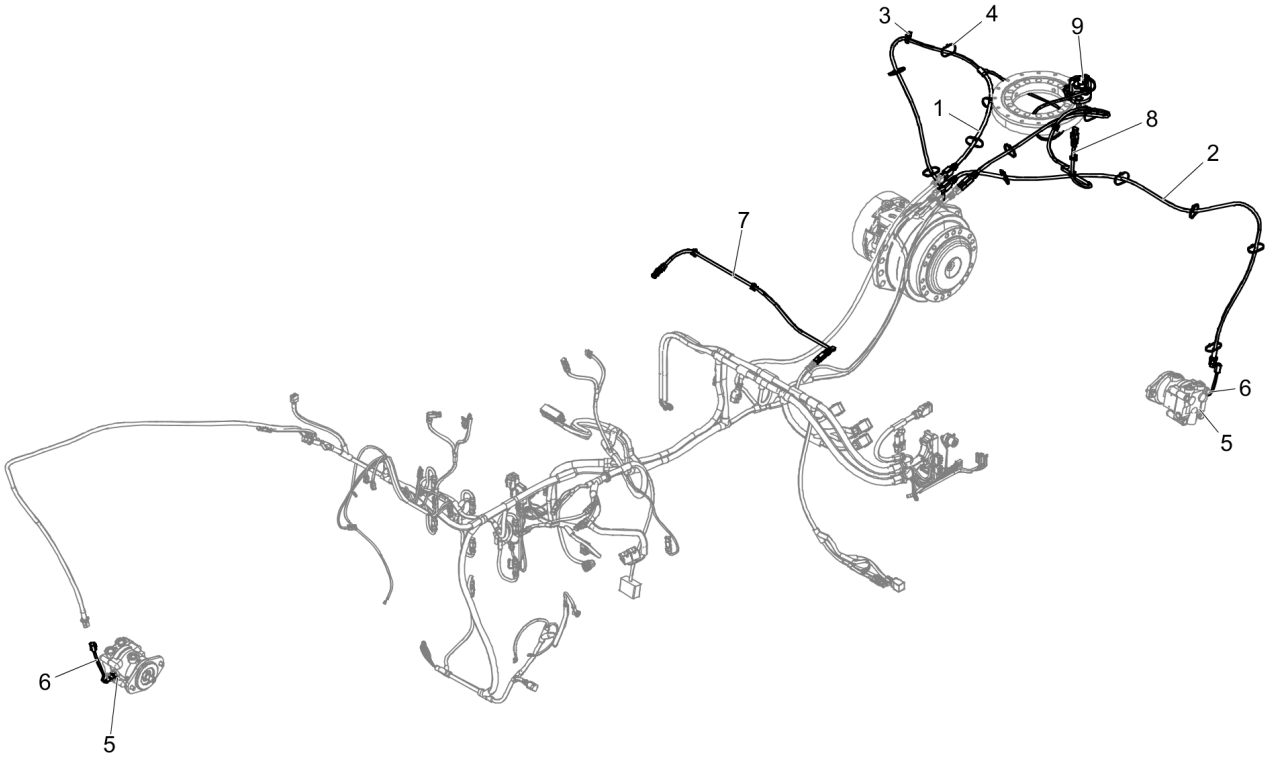

Item	Part No.	Name	Qty	L	SN INFO
1	4812125680	Cable harness, front left	1		
2	4812126294	Cable harness, front right	1		
3	4812122687	Cable tie with holder	1		
4	4700313041	Cable ties	N		
5	4700392221	Mount kit for sensor	2		
6	4700792731	Frequency sensor	2		
7	4812126295	Cable harness, water tank	1		
8	4812126296	Cable harness, fuel tank	1		
9		Switch module, 0 postion	1		

Electric system Swith module, 0-position

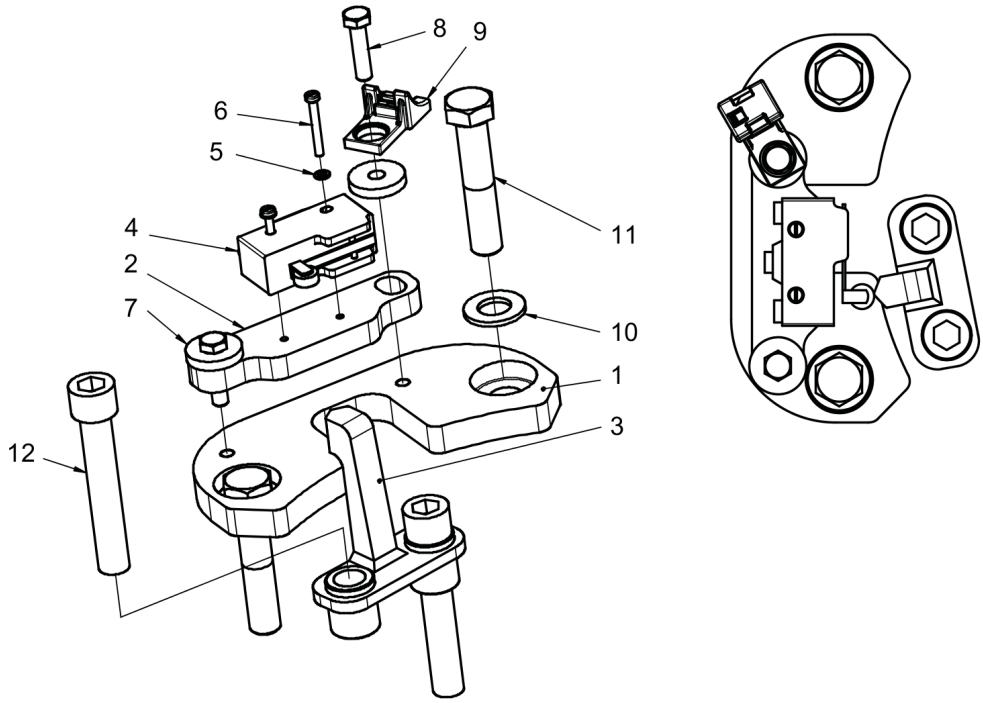

Item	Part No.	Name	Qty	L	SN INFO
1	4812125686	Holder	1		
2	4812125687	Holder	1		
3	4812125688	Cam	1		
4	4700930046	Micro switch	1		
5	4700904697	Washer 3,2x6x0,5	2		
6	4700533050	Screw	2		
7	4700904735	Steel plain washer	2		
8	4700500075	Screw, M6-1,0x25 mm 8.8	2		
9	4812117665	Cable tie with holder	1		
10	4700904231	Washer, 13x24x2 mm 300 HV	2		
11	4700500175	Hex. screw	2		
12	4700792493	Hexagon socket head cap screw	2		

Electric system Power supply, std

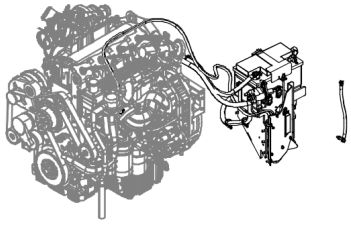

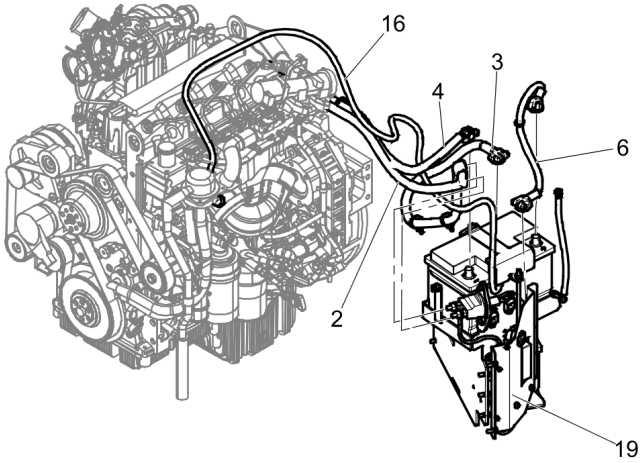

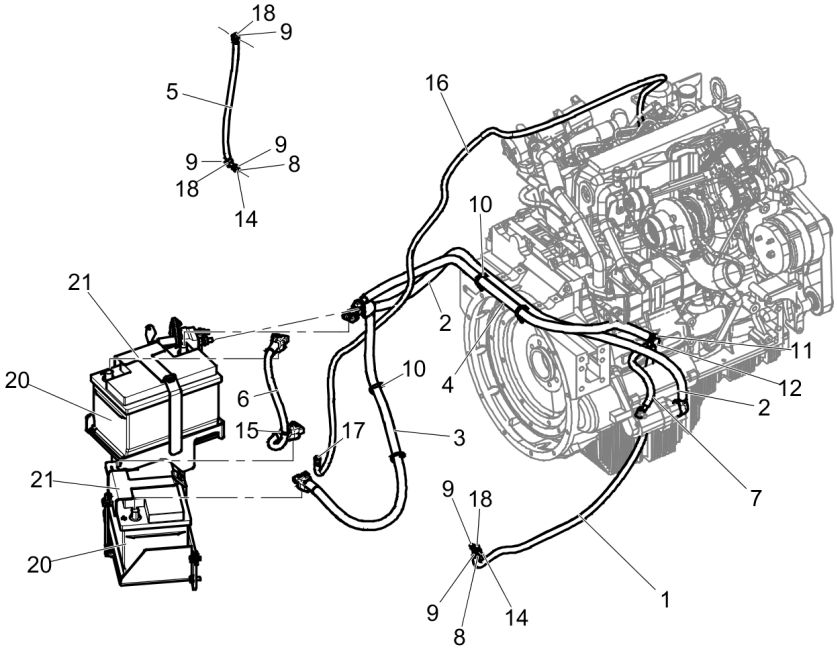

Item	Part No.	Name	Qty	L	SN INFO
1	4812123873	Connection cable coarse	1		
2	4812117905	Connection cable coarse	1		
3	4812124932	Battery cable	1		
4	4812123411	Battery cable	1		
5	4812126299	Connection cable coarse	1		
6	4812123408	Battery cable	1		
7	4812123398	Connection cable coarse	1		
8	4700606004	Plastic washer	2		
9	4700570005	Hexagon nut	5		
10	4700792441	Cable tie with holder	4		
11	4700904231	Washer, 13x24x2 mm 300 HV	1		
12	4700500051	Hex. screw	1		
14	0248998073	Threaded stud	2		
15	4700313041	Cable ties	N		
16	4812126104	Connection cable coarse	1		
17	4700570101	Nut M6	1		
18	4700904229	Washer, 8.4x 6x1.5 mm 300HV	3		
19		Battery shelf module	1		
20		Battery, 12V 74Ah (278x175x190mm)	2		
21		Battery holder	2		

Electric system Battery shelf module

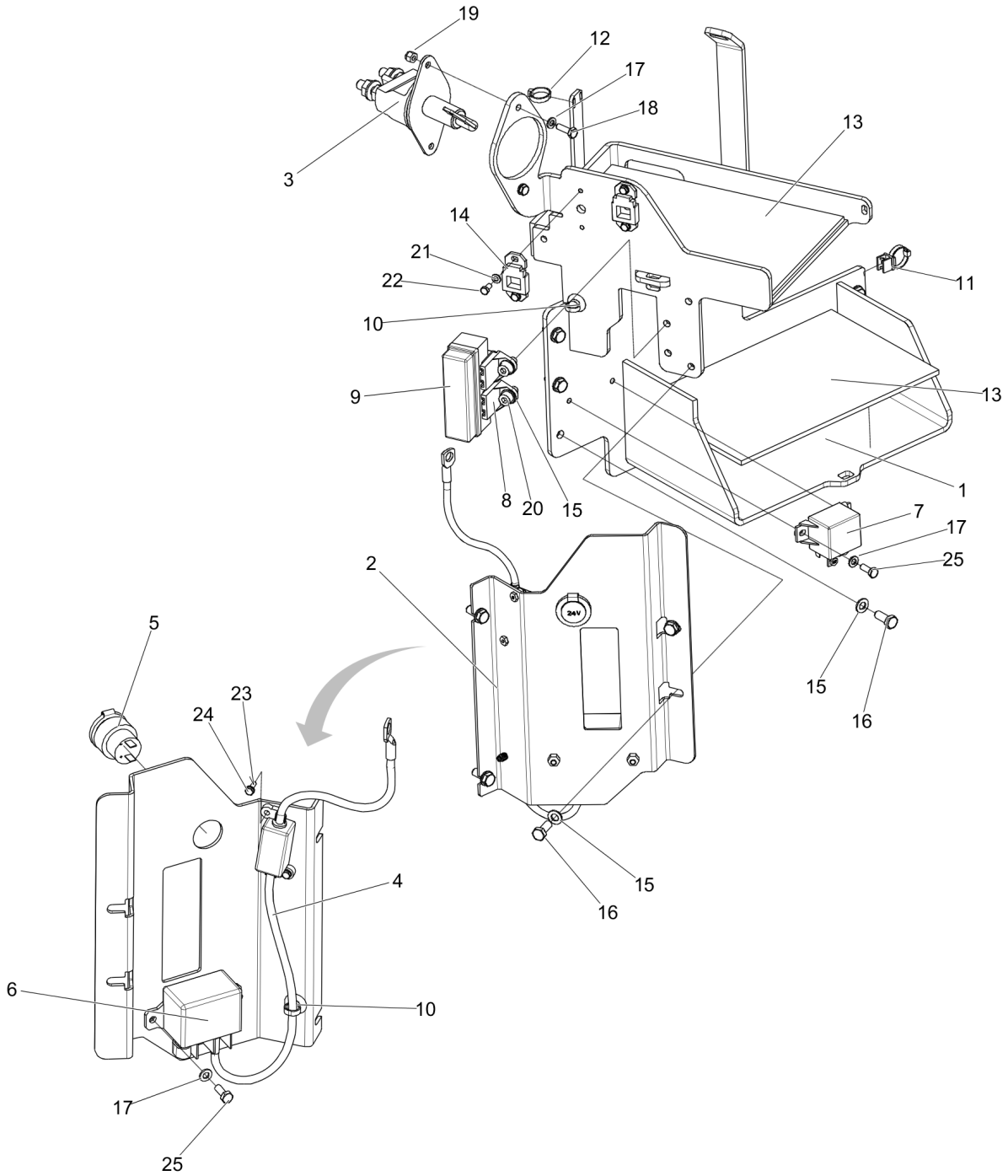

Item	Part No.	Name	Qty	L	SN INFO
1	4812124930	Battery shelf	1		
2	4812126140	Bracket	1		
3	4700903640	Battery switch	1		
4	4812126103	Cable harness	1		
5	4700395816	Plug socket 24V	1		
6	4700792310	Relay 120A	1		
7	4700792309	Relay	1		
8	4812112000	Fuse holder	2		
9	4812111981	Fuse holder	1		
10	4700792441	Cable tie with holder	2		
11	4812122687	Cable tie with holder	1		
12	4700313041	Cable ties	1		
13	4812124988	Rubber cloth	2		
14	4700904036	Bracket	2		
15	4700904229	Washer, 8.4x 6x1.5 mm 300HV	11		
16	4700500053	Screw, M8x20 mm 8.8 A2K	9		
17	4700904228	Washer 6,4x12x1,5	6		
18	4700500040	Screw, M6x20 mm 8.8 A2K	2		
19	4700586002	Lock nut M6 -8	2		
20	4700508005	Screw	2		
21	4700904281	Washer, 5,3x10x1 300HV	4		
22	4700500003	Hex. screw	4		
23	4700904698	Plain washer	2		
24	4700500002	Screw M4-0,7x12H 8.8	2		
25	4700500013	Screw, M6x16 mm 8.8 A2K	4		

Electric system Battery holder

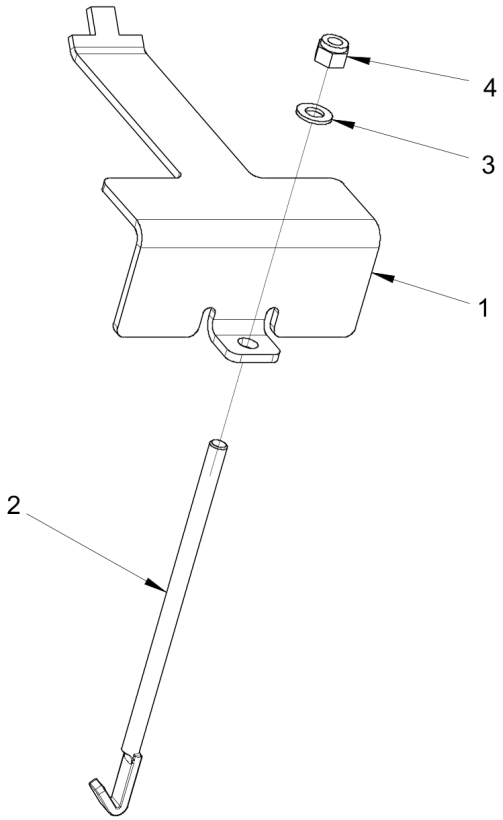

Item	Part No.	Name	Qty	L	SN INFO
1	4812123035	Battery holder	1		
2	4700396635	Battery screw	1		
3	4700904229	Washer, 8.4x 6x1.5 mm 300HV	1		
4	4700586003	Lock nut M8	1		

Electric system Power supply, cab

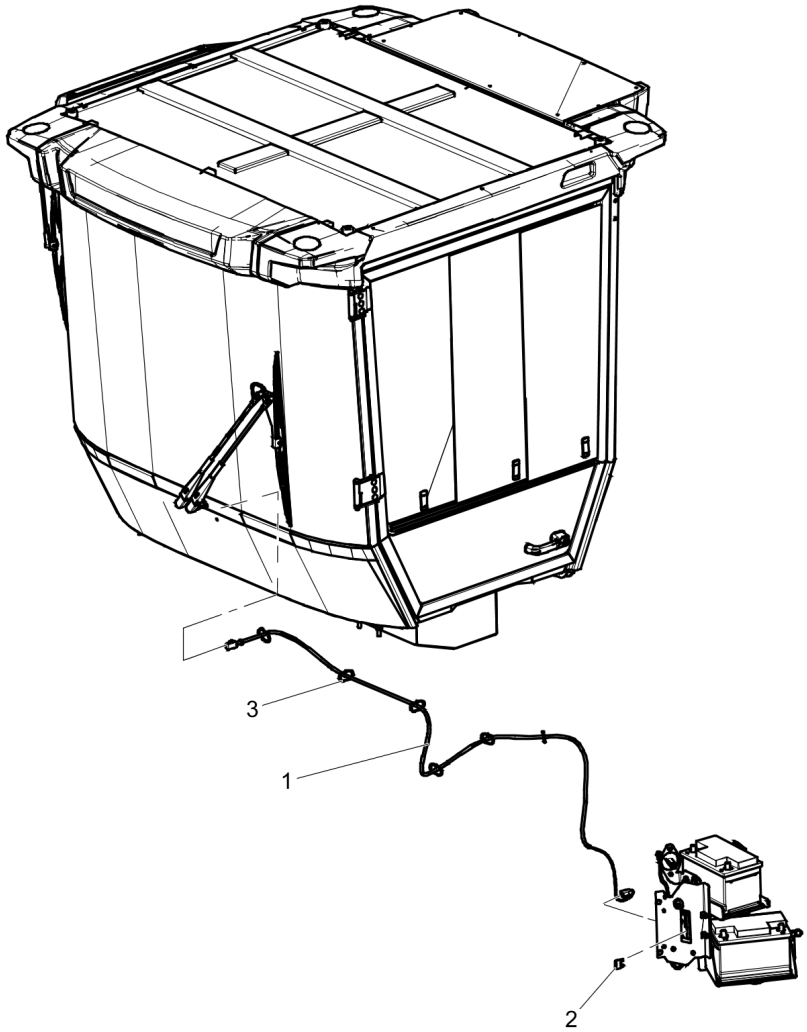

Item	Part No.	Name	Qty	L	SN INFO
1	4812123274	Cable harness	1		
2	4700904037	Fuse 30A Green	1		
3	4700313041	Cable ties	N		

Driving-, direction and licence plate lights Driving-, direction- & Licence plate lights

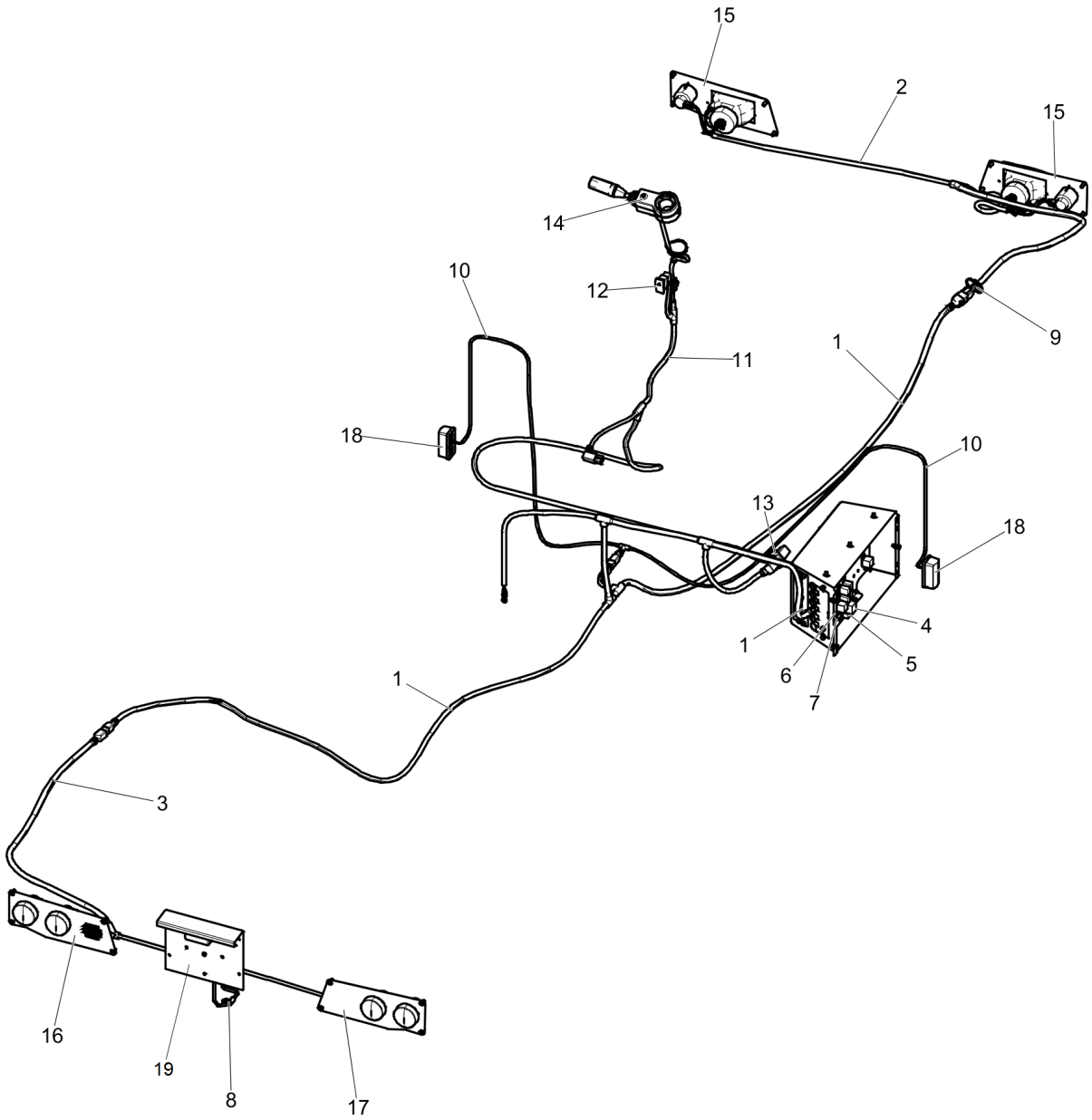

Item	Part No.	Name	Qty	L	SN INFO
1	4812125502	Cable harness	1		
2	4812125388	Cable harness	1		
3	4812125389	Cable harness	1		
4	4812126279	Relay	1		
5	4811000163	Flash relay	1		
6	4700901226	Fuse 7.5A Brown	1		
7	4700901227	Fuse 10A Red	1		
8	4700904780	Hose clamp	1		
9	4700313041	Cable ties	0		
10	4812126402	Cable harness	1		
11	4812123939	Cable harness	1		
12	4700792398	Switch	1		
13	4700791709	Blind rivet	4		
14		Steering switch column			
15		Driving lights module			
16		Driving lights module, left rear			
17		Driving lights module, right rear			
18		Turn signals			
19		Registration plate light			

Driving-, direction and licence plate lights Steering column switch module

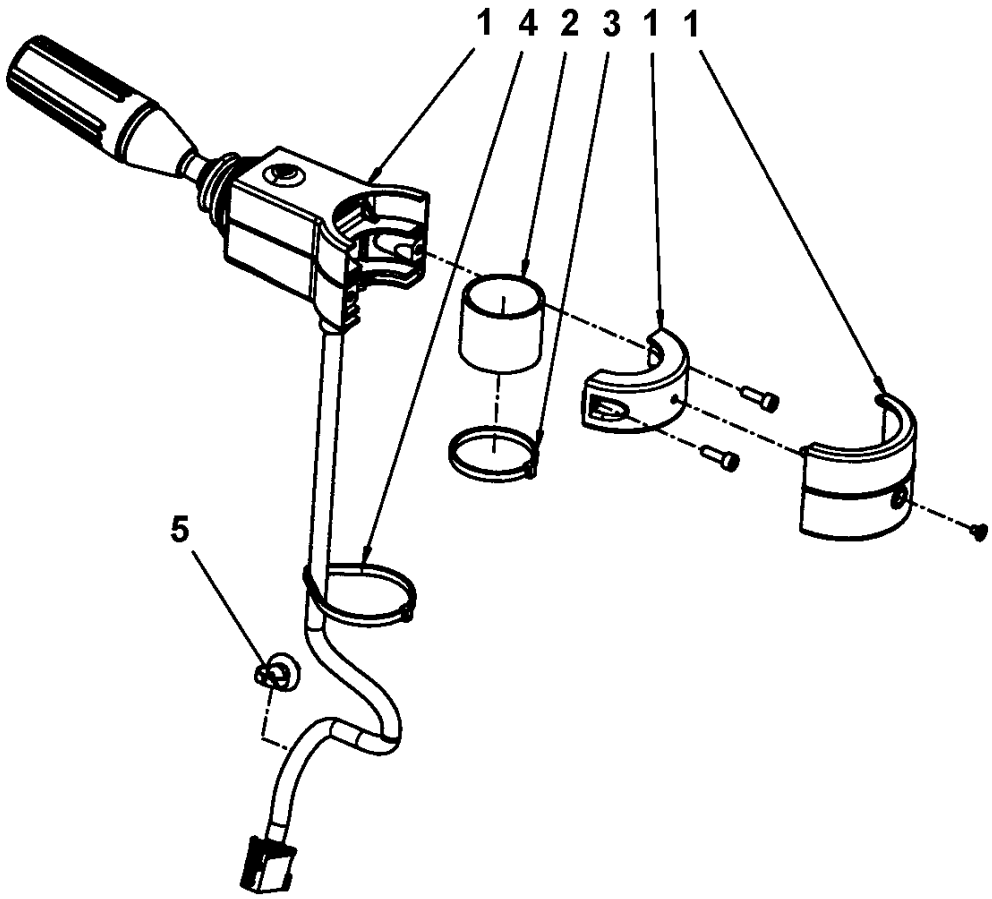

Item	Part No.	Name	Qty	L	SN INFO
1	4700392450	Steering column switch	1		
2	4700392451	Rubber cloth	1		
3	4700313041	Cable ties	1		
4	4700792609	Cable ties	1		
5	4700921080	Clamp	1		

Driving-, direction and licence plate lights Driving lights module

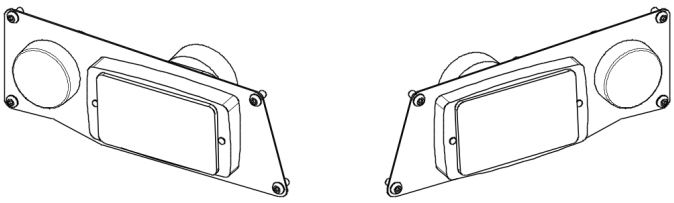

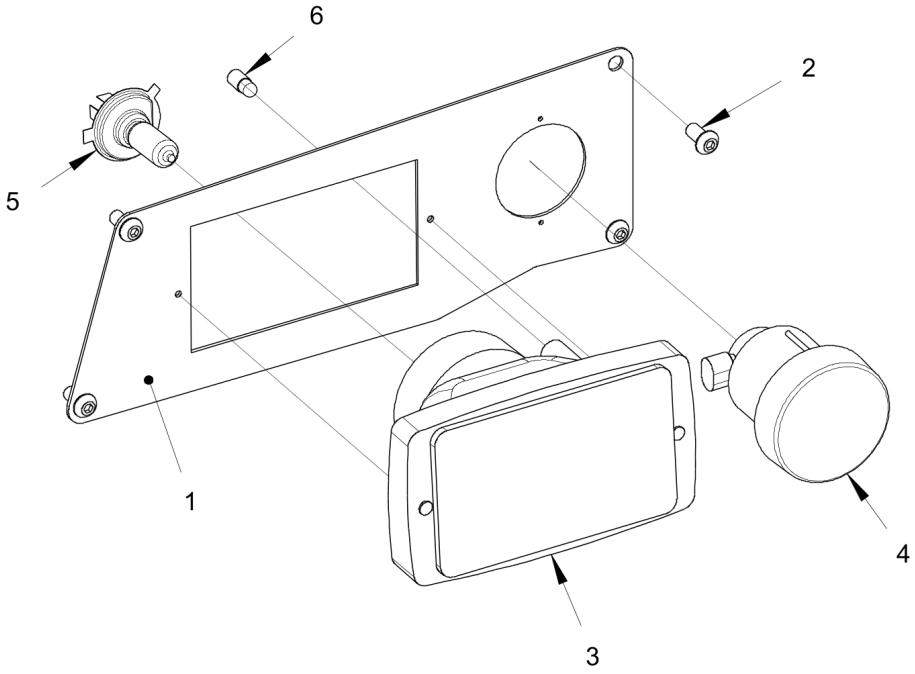

Item	Part No.	Name	Qty	L	SN INFO
1	4812124749	Cover	1		
2	4700904956	Screw	4		
3	4700791951	Headlight right hand asym. with parking light	1		
3	4700792059	Headlight left hand asym. with parking light	1		
4	4700792521	Direction indicator	1		
5	4700792353	Bulb 24V 75/70W H4	1		
6	4700792350	Bulb 24V 2W	1		

Driving-, direction and licence plate lights Turn signals

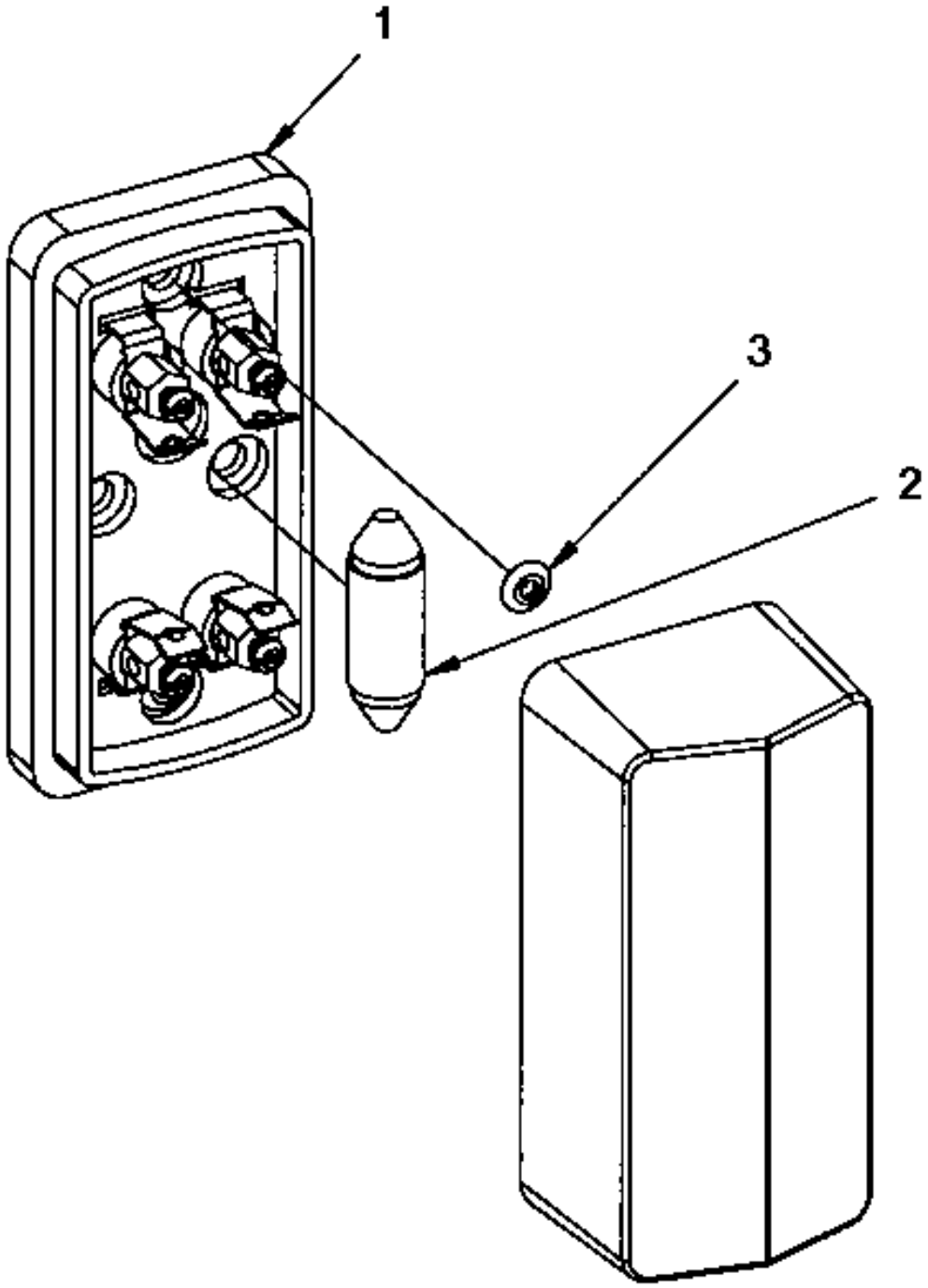

Item	Part No.	Name	Qty	L	SN INFO
1	4700902064	Direction lights	1		
2	4700792354	Bulb 24V 5W	1		
3	4700923253	Rivet	2		

Driving-, direction and licence plate lights Registration plate light

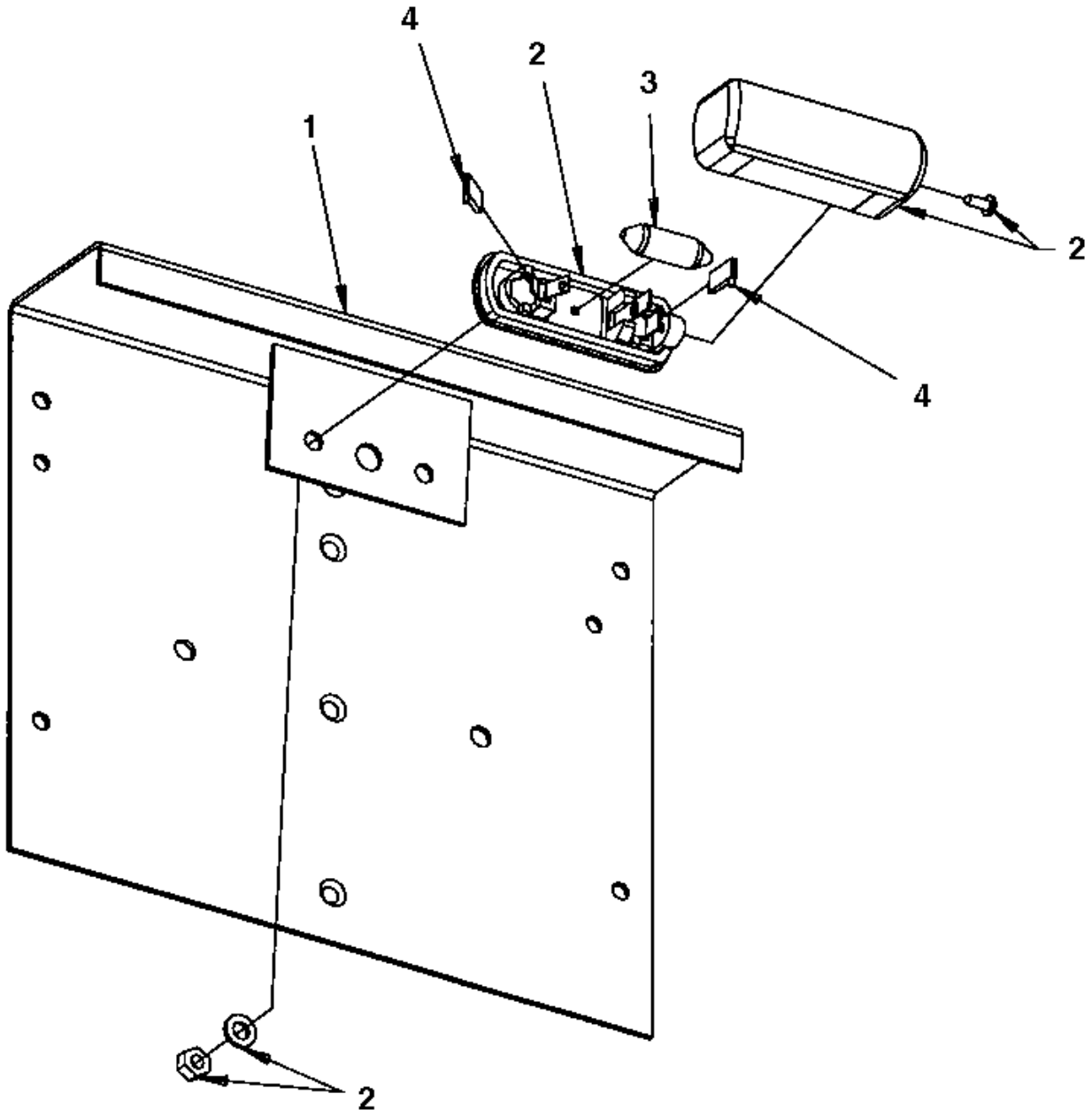

Item	Part No.	Name	Qty	L	SN INFO
1	4700355797	Licence plate holder	1		
2	4700929455	Licence plate light	1		
3	4700792354	Bulb 24V 5W	1		
4	4700792035	Push-on terminal	2		

Driving-, direction and licence plate lights Driving lights module, left rear

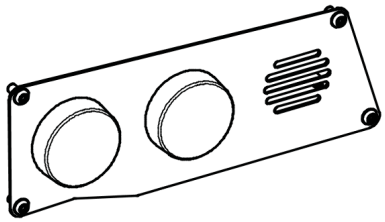

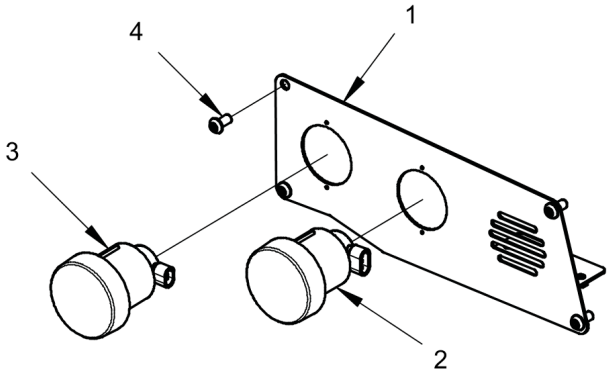

Item	Part No.	Name	Qty	L	SN INFO
1	4812126436	Cover	1		
2	4700792519	Brake/position light	1		
3	4700792520	Direction indicator	1		
4	4700904956	Screw	4		

Driving-, direction and licence plate lights Driving lights module, right rear

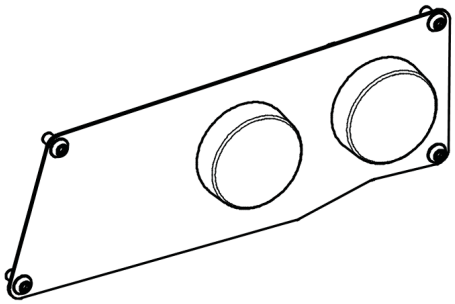

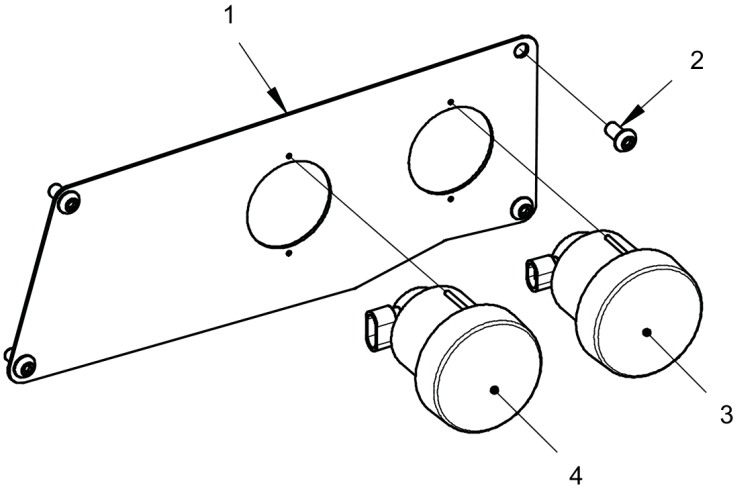

Item	Part No.	Name	Qty	L	SN INFO
1	4812125263	Cover	1		
2	4700904956	Screw	4		
3	4700792520	Direction indicator	1		
4	4700792519	Brake/position light	1		

Electric system Rotating beacon

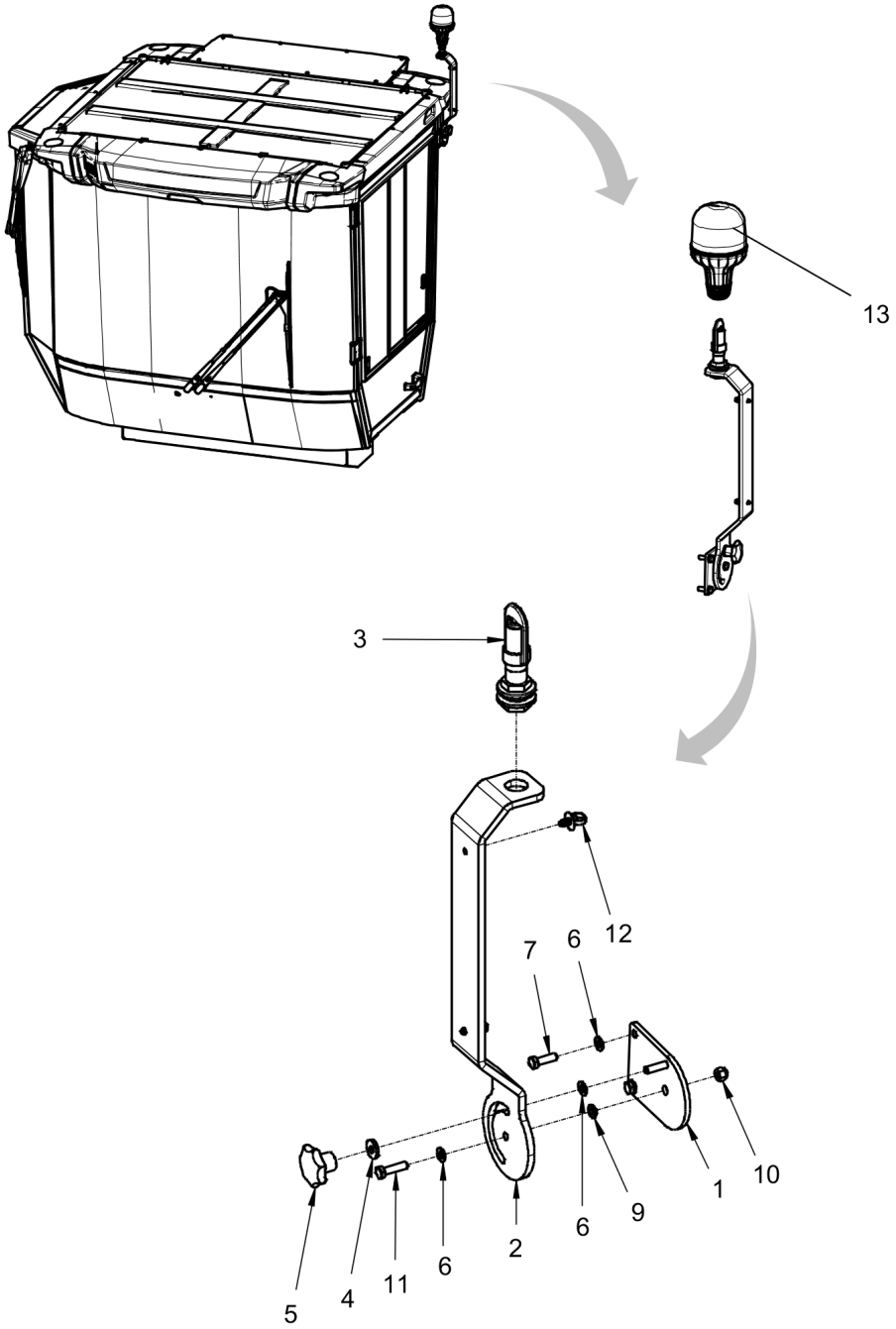

Item	Part No.	Name	Qty	L	SN INFO
1	4812123575	Bracket	1		
2	4812123574	Bracket	1		
3	4812120469	Bracket	1		
4	4700904640	Washer, 8.4x22x3 mm 300HV	1		
5	4700792410	Hand knob nut	1		
6	4700904229	Washer, 8.4x 6x1.5 mm 300HV	5		
7	4700500021	Screw, M8x25 mm 8.8 A2K	2		
9	4812112774	Bushing	1		
10	4700586003	Lock nut M8	1		
11	4700500022	Screw	1		
12	4700792441	Cable tie with holder	2		
13	4812122611	Rotating beacon	1		

Electric system Drum edge lights

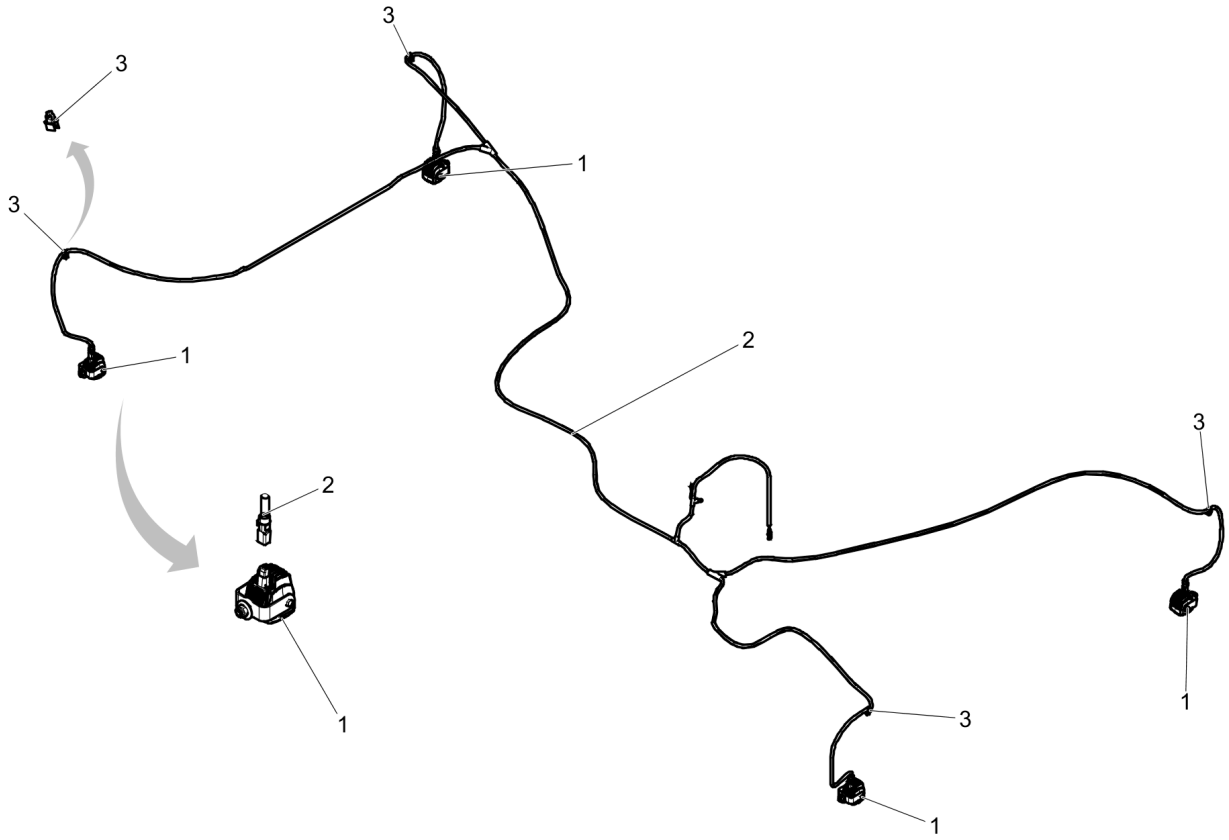

Item	Part No.	Name	Qty	L	SN INFO
1	4812119337	Working light	4		
2	4812125663	Cable harness	1		
3	4812122687	Cable tie with holder	4		

Electric system Working lights Rops/Cab

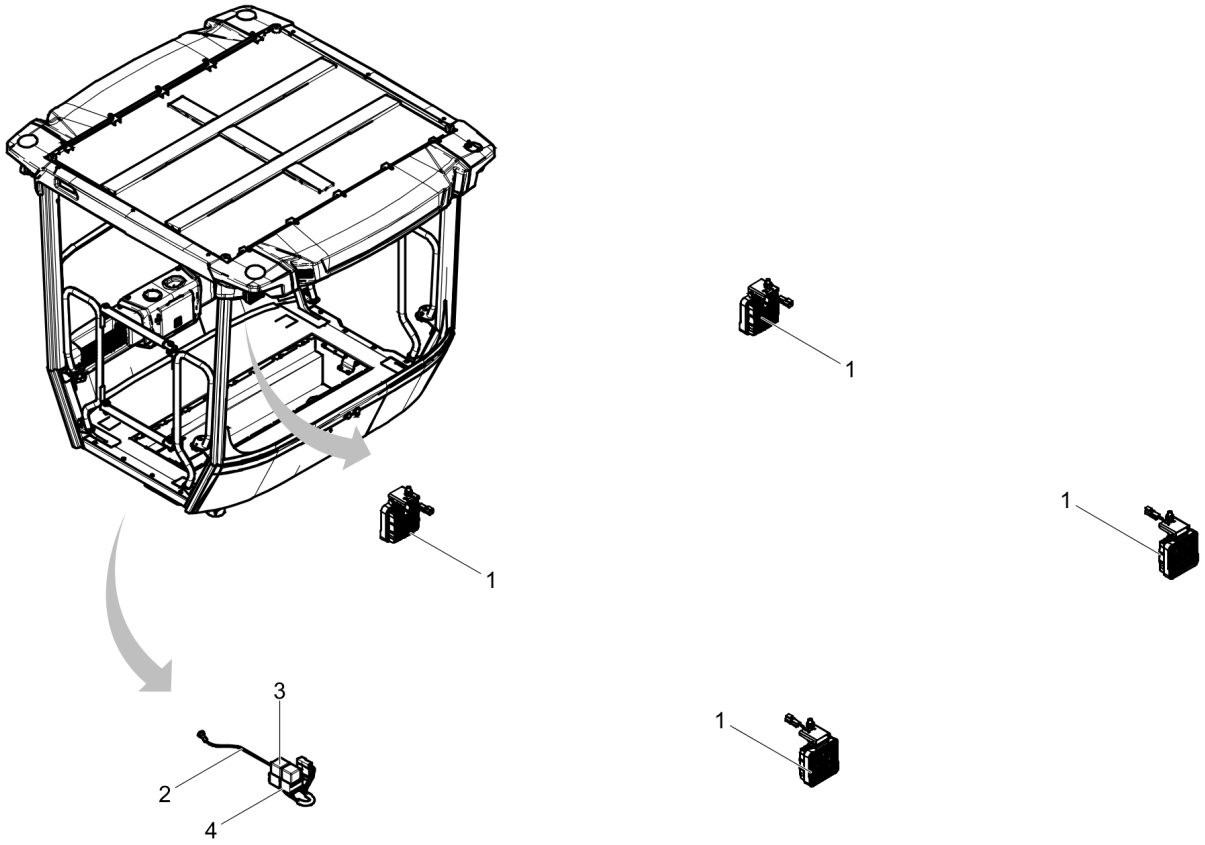

Item	Part No.	Name	Qty	L	SN INFO
1	4812126777	Working light, LED 15W	4		
2	4812123813	Cable harness	1		
3	4700792422	Relay 24V 20A	2		
4	4700792210	Screw torx	2		

Electric system Dyn@Link

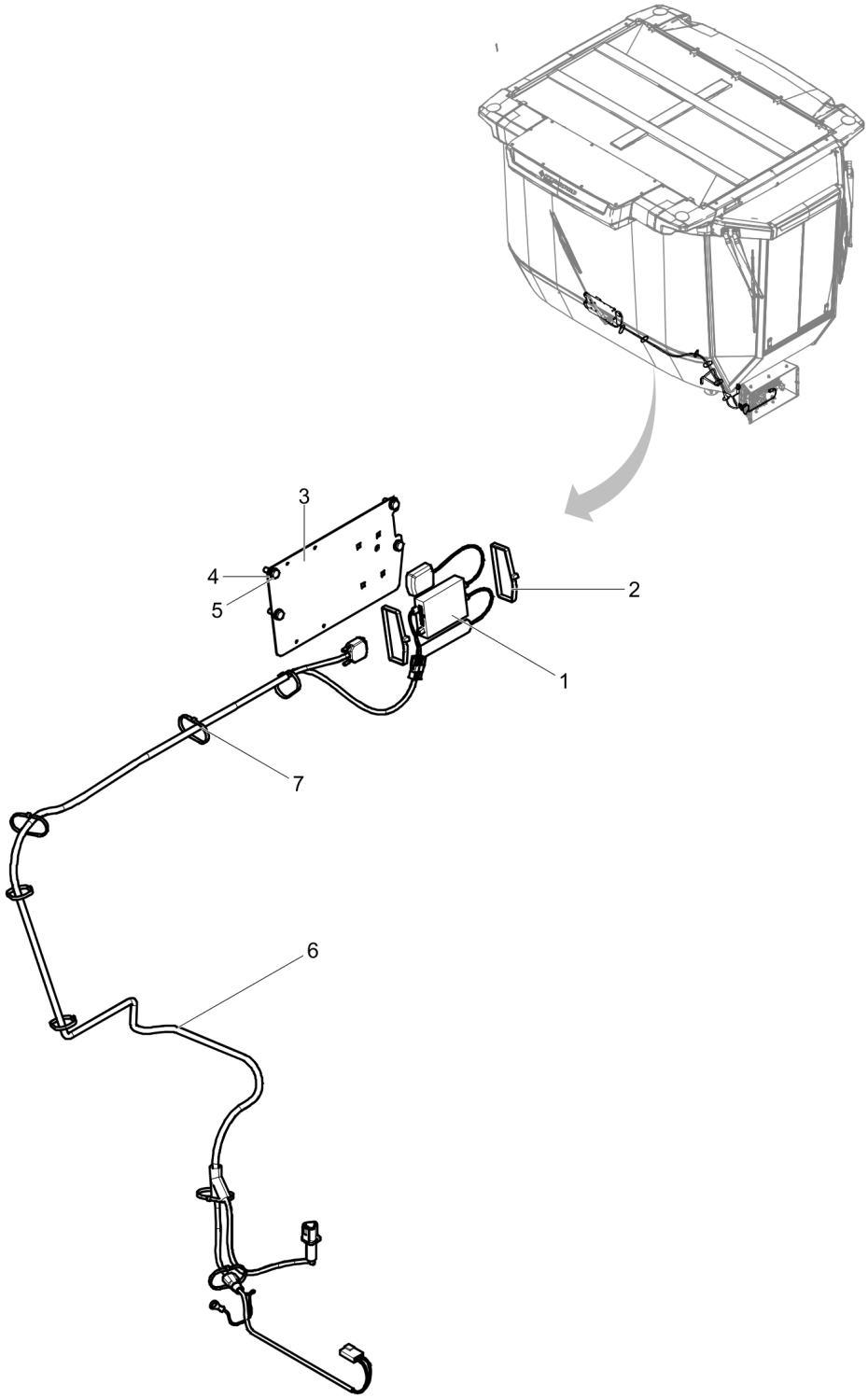

Item	Part No.	Name	Qty	L	SN INFO
1	4812013040	GPS module	1		
2	4700792607	Shock absorber	2		
3	4812126278	Bracket	1		
4	4700904229	Washer, 8.4x 6x1.5 mm 300HV	4		
5	4700500053	Screw, M8x20 mm 8.8 A2K	4		
6	4812126331	Cable harness	1		
7	4700313041	Cable ties	N		

Operator platform Cab module

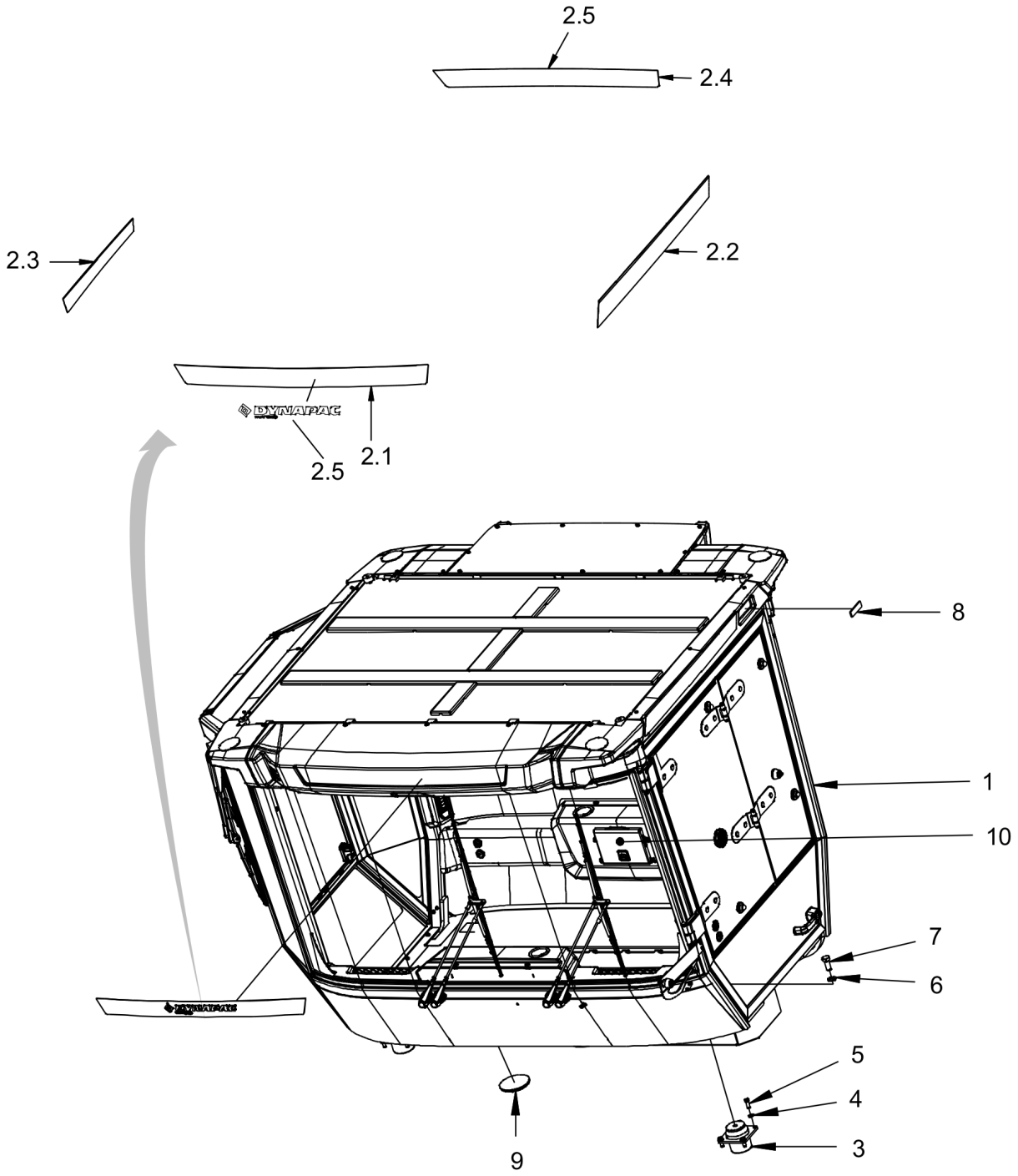

Item	Part No.	Name	Qty	L	SN INFO
1	4812122868	Cab asymmetric, comfort	1		
1	4812122869	Cab asymmetric, std	1		
2		Decals basic kit	1		
2.1	4812127983	Decal cosmetic, White	1		
2.2	4812127979	Decal cosmetic, White	1		
2.3	4812127980	Decal cosmetic, White	1		
2.4	4812127981	Decal cosmetic, White	1		
2.5	4812127715	Decal "FAYAT DYNAPAC", 350-RD	2		
3	4812125174	Shock absorber	4		
4	4700904231	Washer, 13x24x2 mm 300 HV	16		
5	4700500046	Hex. head screw M12x030H	16		
6	4700904233	Steel plain washer 21x36x3	4		
7	4700500205	Screw	4		
8	4700377744	Reflector, yellow	2		
9	4700379992	Plug	3		
10		Manual box	1		

4812122868 Cab asymmetric, comfort 4812122868 Cab asymmetric comfort

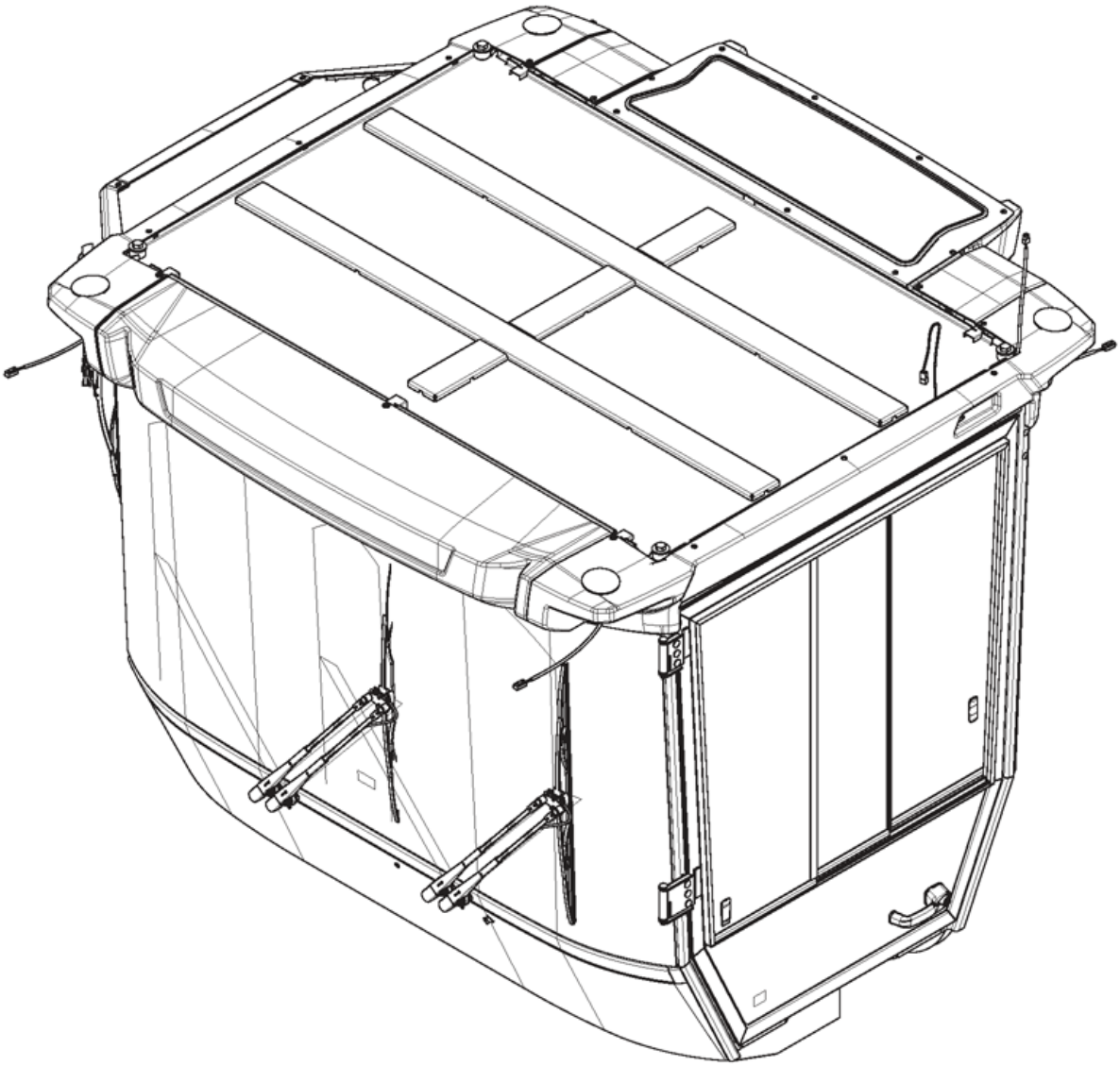

Item	Part No.	Name	Qty	L	SN INFO
1	-	Cab frame			
2		Roof edges			
3	4812125313	Floor mat			
4		Windscreen and wipers, front			
5		Screens, wipers and switches, cab right side			
6		Interior, ceiling (lights, nozzles, hammer, hook, switch 1&2)			
7		Ventilation hoses, rear washer/wiper, power sockets			
8		Interior, front (air channel, loud speakers, antenna, relays, switch 1)			
9		AC Box			
10		Air condition installaion (ACC)			
11		Door, left			
12		Horn, power converter, protections			
13		Rear screen			

4812122868 Cab asymmetric, comfort Roof edges

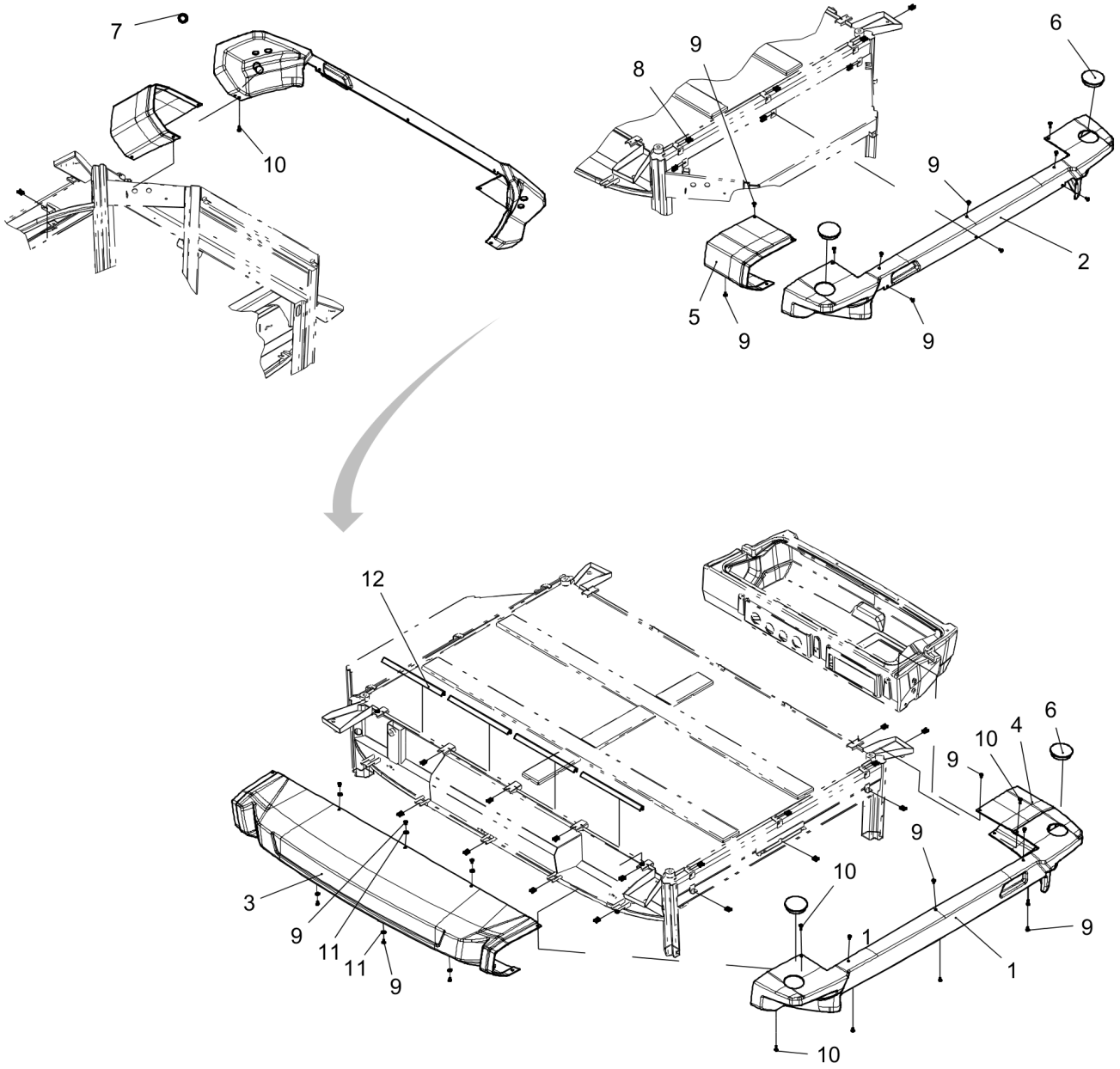

Item	Part No.	Name	Qty	L	SN INFO
1	4812122888	Roof cover left	1		
2	4812122889	Roof cover right	1		
3	4812125304	Roof cover front	1		
4	4812126341	Roof inner left	1		
5	4812126342	Roof inner right	1		
6	4812122907	Plug	4		
7	4700904347	Grommet	4		
8	4812114567	Speed nut	22		
9	-	Screw	16		
10	-	Screw	8		
11	4700928381	Washer, 6.4x18x1.6 mm	10		
12	-	Sealing profile	1,44		

4812122868 Cab asymmetric, comfort Windscreen and wipers, front

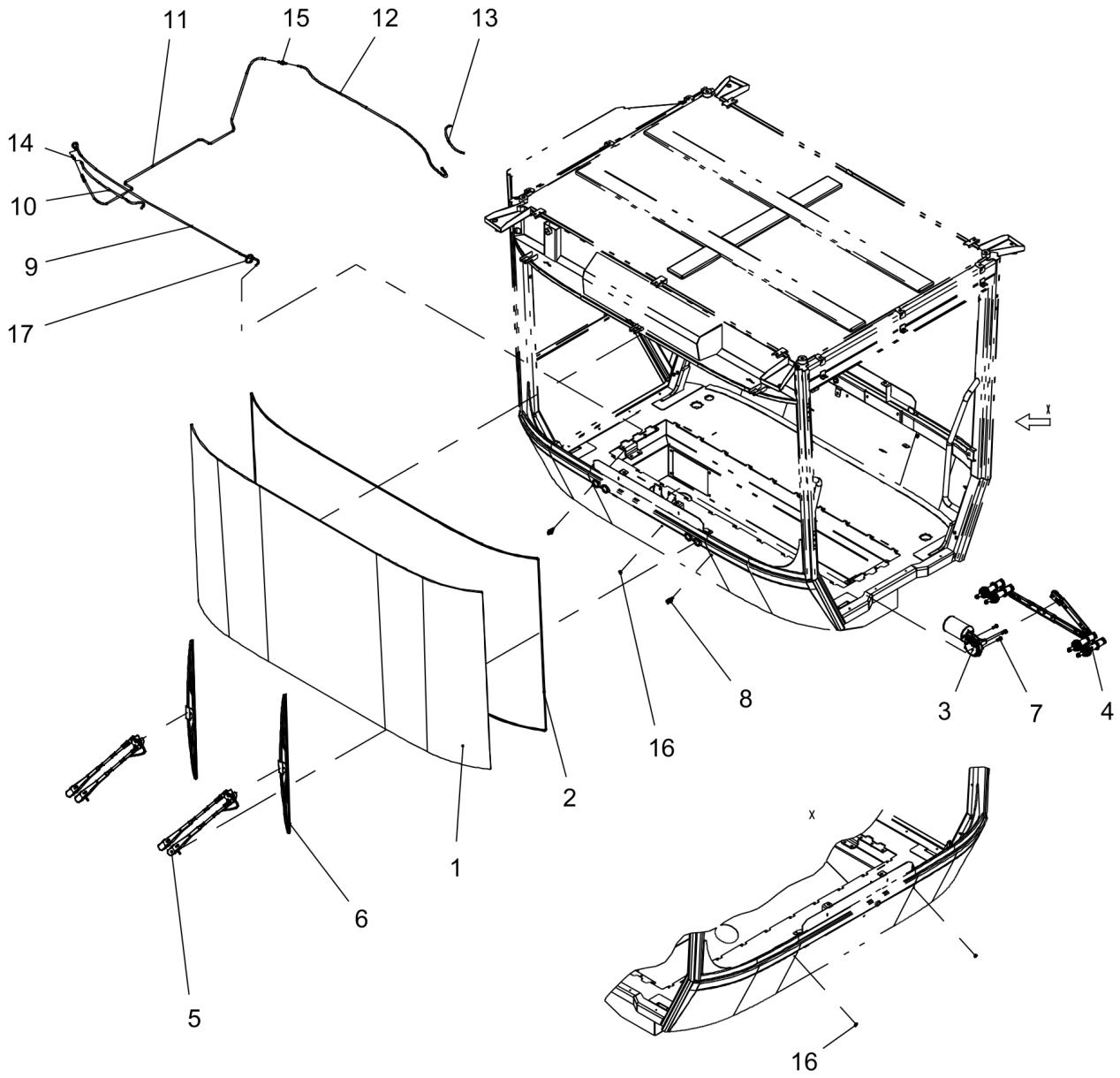

Item	Part No.	Name	Qty	L	SN INFO
1	4812122897	Windscreen	1		
2	4812159184	Rubber list	5.883		
3	4812126343	Wiper motor	1		
4	4812126344	Linkage assembly	1		
5	4812126345	Wiper arm	2		
6	4812126346	Wiper blade	2		
7	-	Hexagon screw M8x20	3		
8	4700908561	Grommet	2		
9	-	Hose	1,381		
10	-	Hose	0,502		
11	-	Hose	1,794		
12	-	Hose	1,168		
13	-	Hose	0,246		
14	4812126347	Nozzle	1		
15	4700908564	Check valve	1		
16	-	Plug	3		
17	4700313041	Cable ties	2		

4812122868 Cab asymmetric, comfort Ceiling, lower panels

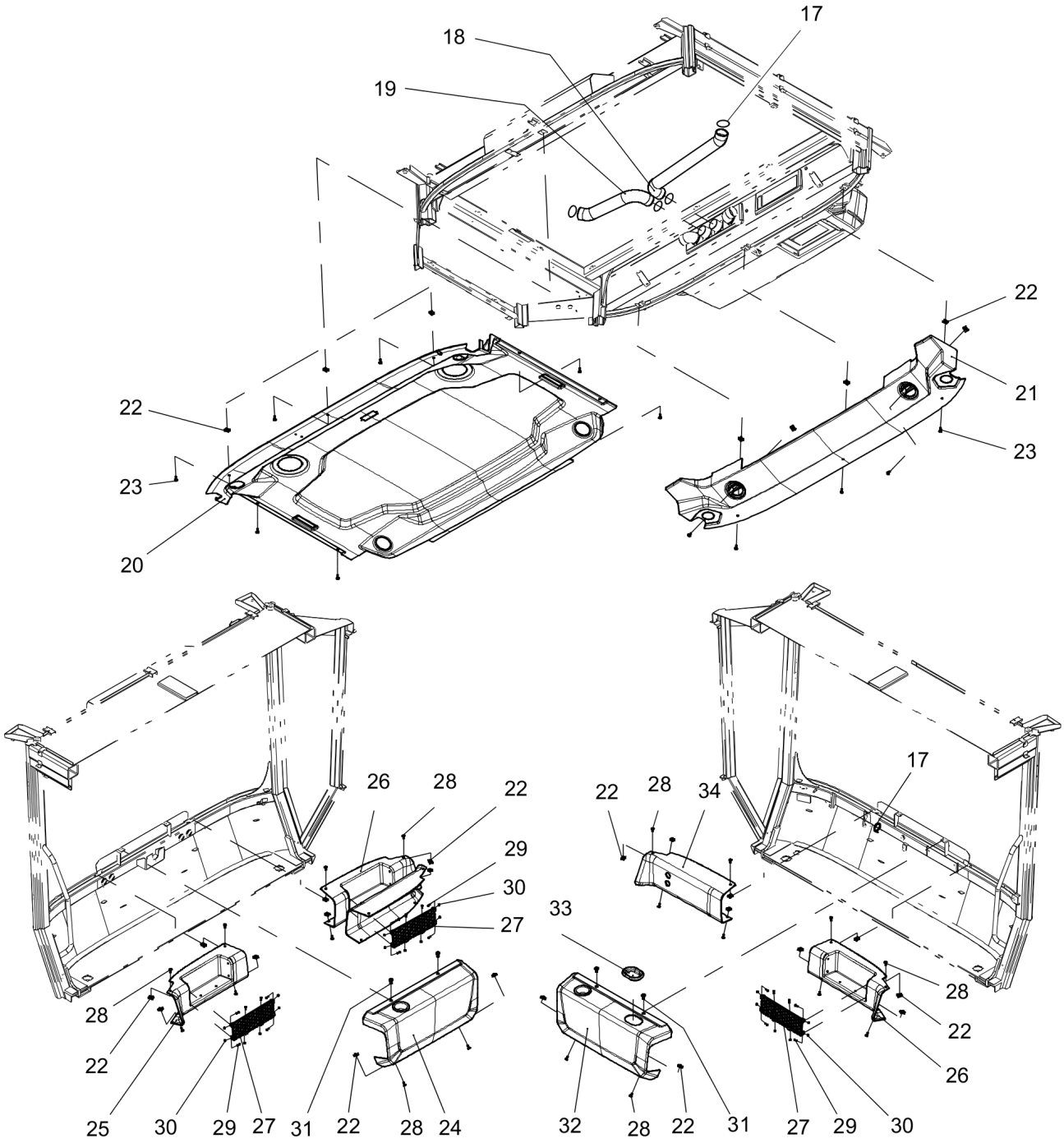

Item	Part No.	Name	Qty	L	SN INFO
17	4700313041	Cable ties	5		
18	-	Spiral hose	0,65		
19	-	Spiral hose	0,42		
20	4812126348	Head liner, front	1		
21	4812126349	Head liner, rear	1		
22	4812114567	Speed nut	28		
23	-	Screw	12		
24	4812126350	Cover, front	1		
25	4812122912	Cover, lh	1		
26	4812122913	Cover rear	2		
27	4812122915	Storage net	3		
28	-	Screw	20		
29	-	Screw	18		
30	4700570002	Nut M4	18		
31	-	Screw	4		
32	4812125305	Cover, rear middle	1		
33	4812122917	Cap storage	1		
34	4812125336	Cover, lh	1		

4812122868 Cab asymmetric, comfort Screens, wipers and switches, cab right side

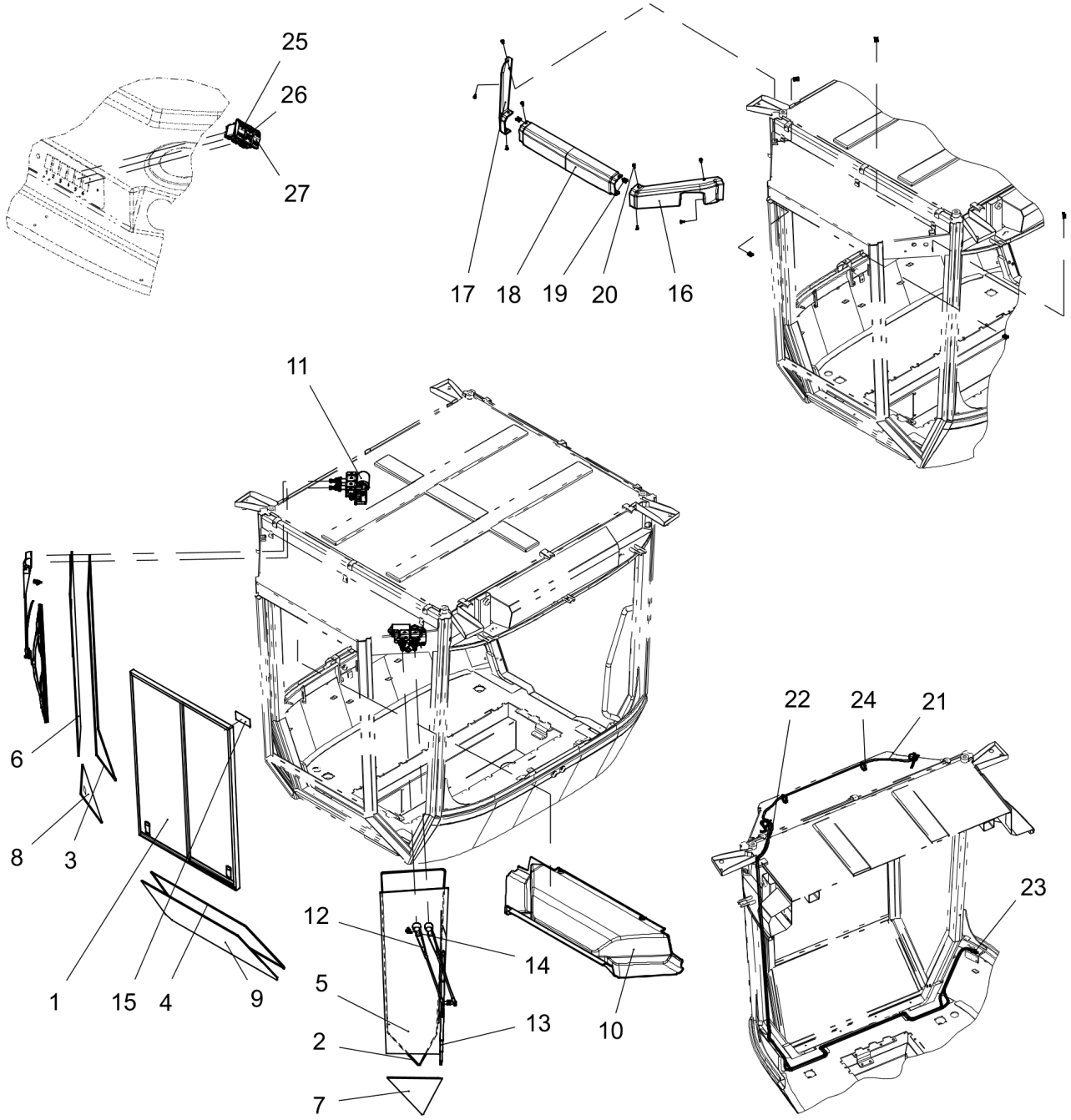

Item	Part No.	Name	Qty	L	SN INFO
1	4812125328	Sliding window	1		
2	4812159184	Rubber list	2,923		
3	4812159184	Rubber list	2,923		
4	4812159184	Rubber list	2,247		
5	4812122898	Side screen, front top	1		
6	4812122899	Side screen, rear top	1		
7	4812122900	Side screen, front bottom	1		
8	4812122901	Side screen, rear bottom	1		
9	4812122902	Side screen, middle bottom	1		
10	4812125329	Headliner extension	1		
11	4812125330	Wiper motor	2		
12	4812125331	Wiper arm	2		
13	4812125332	Wiper blade	2		
14	4700908561	Grommet	2		
15	4700903590	Decal emergency exit	1		
16	4812125333	Roof side, front	1		
17	4812125334	Roof side, rear	1		
18	4812125335	Roof side, middle	1		
19	4812114567	Speed nut	8		
20	4812161352	Screw	8		
21	-	Hose	4,339		
22	-	Hose	3,302		
23	4700908564	Check valve	2		
24	4700313041	Cable ties	4		
25	4812115192	Switch	1		
26	4700792505	Switch, Windshield washers	1		
27	4812115187	Switch, Windshield wiper, rear	1		

4812122868 Cab asymmetric, comfort 4812125328 Sliding window

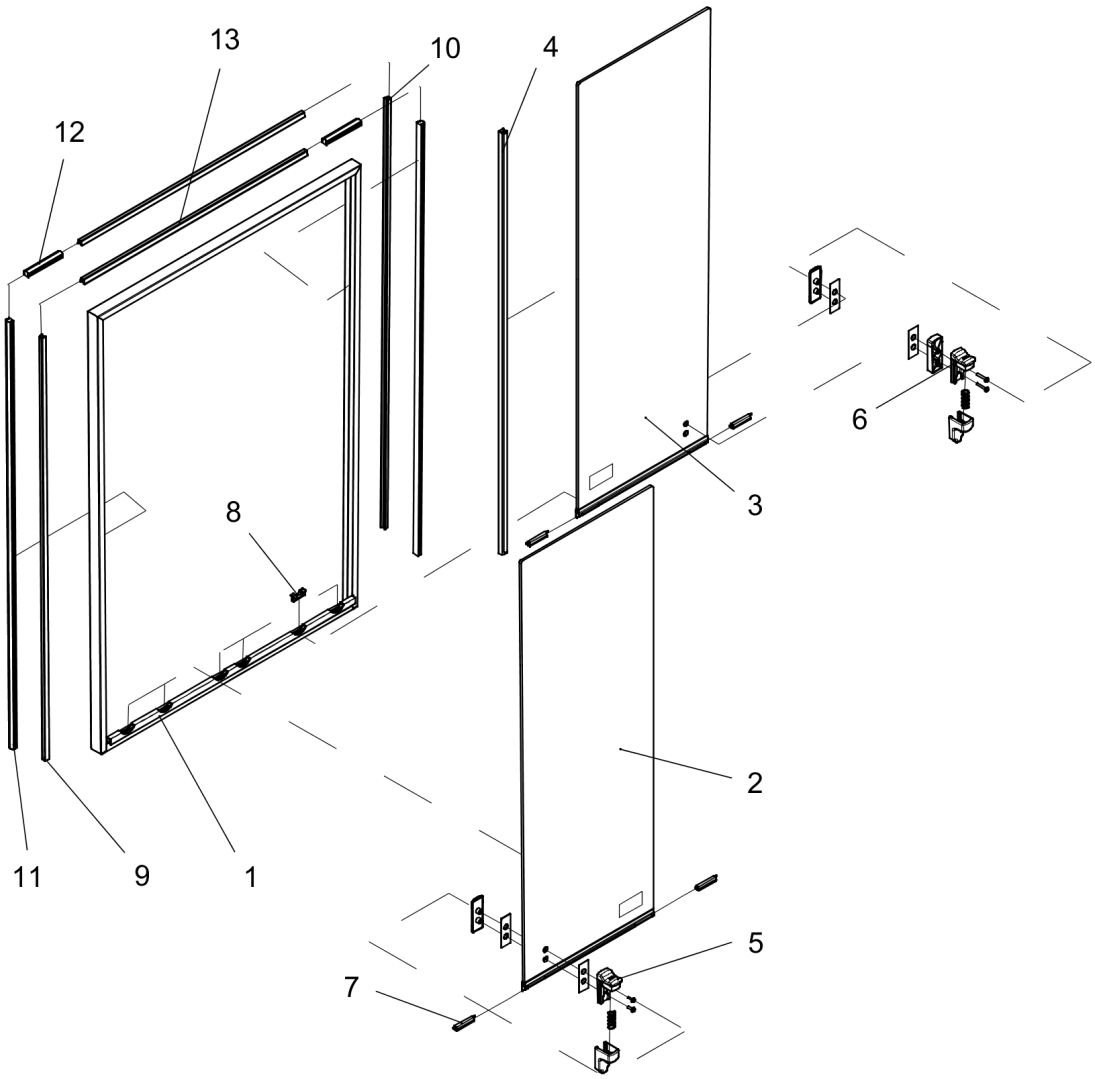

Item	Part No.	Name	Qty	L	SN INFO
1	-	Window screen frame	1		
2	4812126354	Sliding screen, front	1		
3	4812126355	Sliding screen, rear	1		
4	-	Sealing bar	1		
5	4812115219	Handle	1		
6	4812115220	Handle	1		
7	4812159775	Guide	4		
8	4812115223	Bracket	6		
9	4812160877	Window seal	0,974		
10	4812160877	Window seal	0,981		
11	4812161155	Strip	1,97		
12	4812161155	Strip	0,184		
13	4812160877	Window seal	1,184		

4812122868 Cab asymmetric, comfort Interior, celing (lights, nozzles, hammer, hook, switch 2&3)

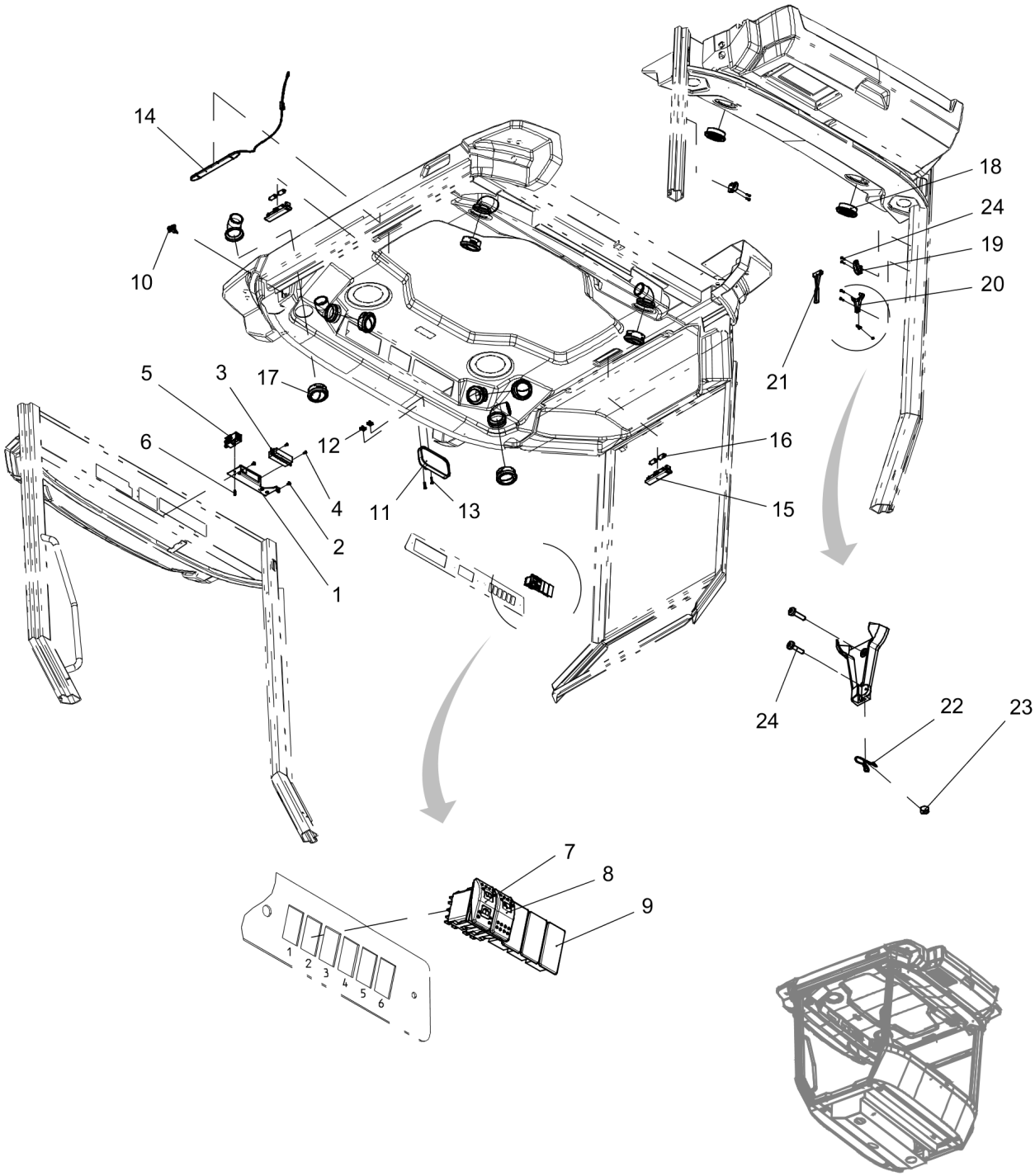

Item	Part No.	Name	Qty	L	SN INFO
1	4812125337	Bracket, electrics	1		
2	-	Screw	2		
3	4700791185	Fuse box	1		
4	4700791966	Head screw M4 x 12	2		
5	-	Relay 24V 72A	1		
6	-	Screw	2		
7	4700792505	Switch, Windshield washers	1		
8	4812115187	Switch, Windshield wiper, rear	1		
9	-	Cover	3		
10	4812115183	Door switch	1		
11	4812115177	Mirror	1		
12	-	Speed nut	2		
13	-	Screw	2		
14	4812115199	Step light	1		
15	4812120257	Inner light	2		
16	-	Bulb	4		
17	4812125338	Air nozzle 90 degree	6		
18	4812116204	Air nozzle	2		
19	4700908505	Hook	2		
20	4700908506	Emergency hammer hook	1		
21	4700908507	Emergency hammer	1		
22	-	Lead sealing wire	1		
23	-	Lead seal	1		
24	4700904206	Screw, M6x16 mm	6		

4812122868 Cab asymmetric, comfort Ventilation hoses, rear washer/wiper, power sockets

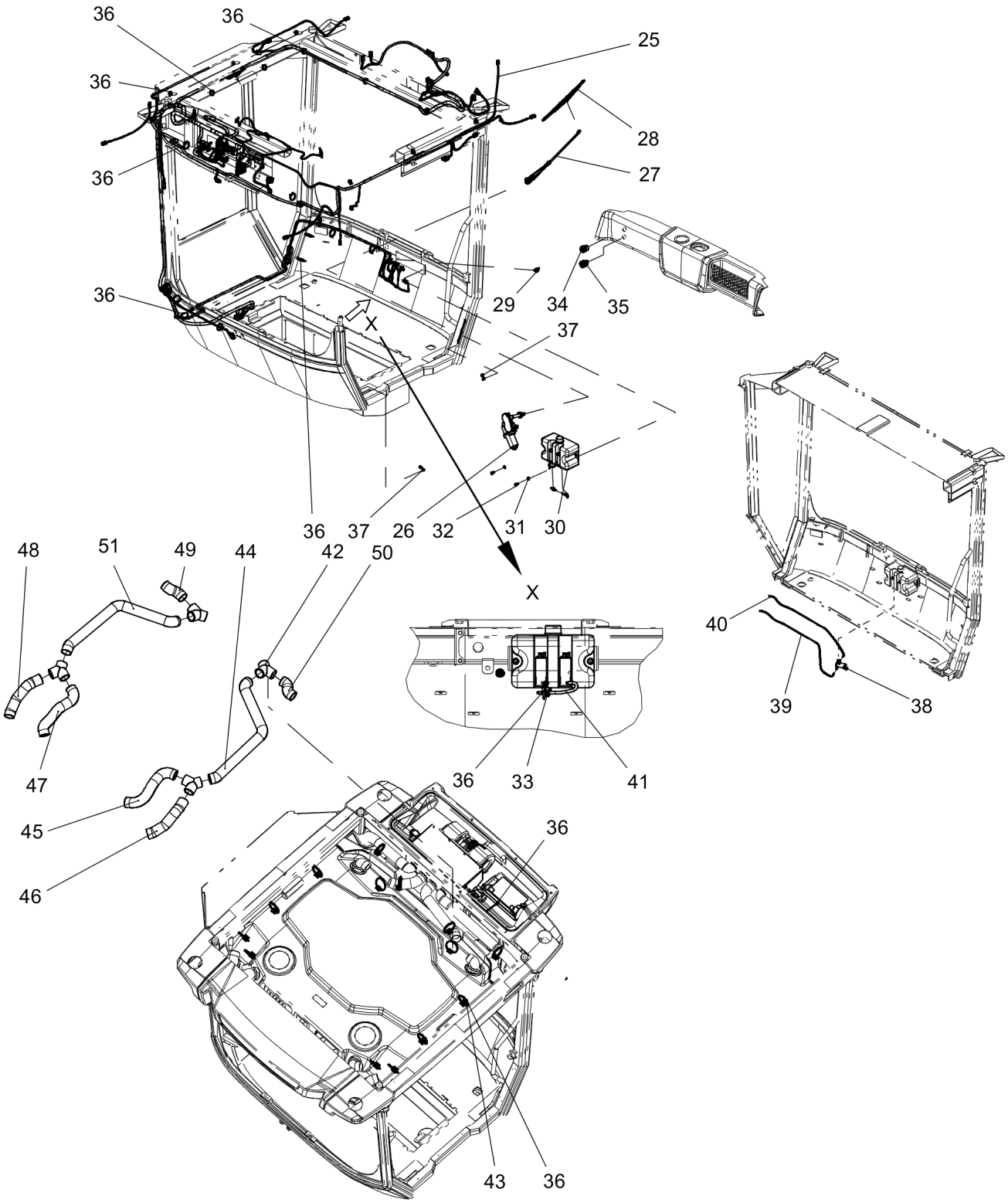

Item	Part No.	Name	Qty	L	SN INFO
25	4812125306	Cable harness, cab	1		
26	4812125339	Wiper motor	1		
27	4812125340	Wiper arm	1		
28	4812120266	Wiper blade	1		
29	4700908561	Grommet	1		
30	4812125341	Washer reservoir	1		
31	-	Washer	2		
32	-	Screw	2		
33	4700908564	Check valve	1		
34	4700395816	Plug socket 24V	1		
35	4812110560	Power socket 12V	1		
36	4700313041	Cable ties	38		
37	-	Plug	8		
38	4812125286	Windshield washer pump	1		
39	-	Hose pvc	1,055		
40	-	Hose pvc	0,978		
41	-	Tube	0,115		
42	4812125342	Y-connector	4		
43	4812161370	Cable support	14		
44	-	Ventilation hose	0,825		
45	-	Ventilation hose	0,395		
46	-	Ventilation hose	0,31		
47	-	Ventilation hose	0,395		
48	-	Ventilation hose	0,31		
49	-	Ventilation hose	0,14		
50	-	Ventilation hose	0,14		
51	-	Ventilation hose	0,825		

4812122868 Cab asymmetric, comfort Interior, front (air channel, loud speakers, antenna, relays, switch 1)

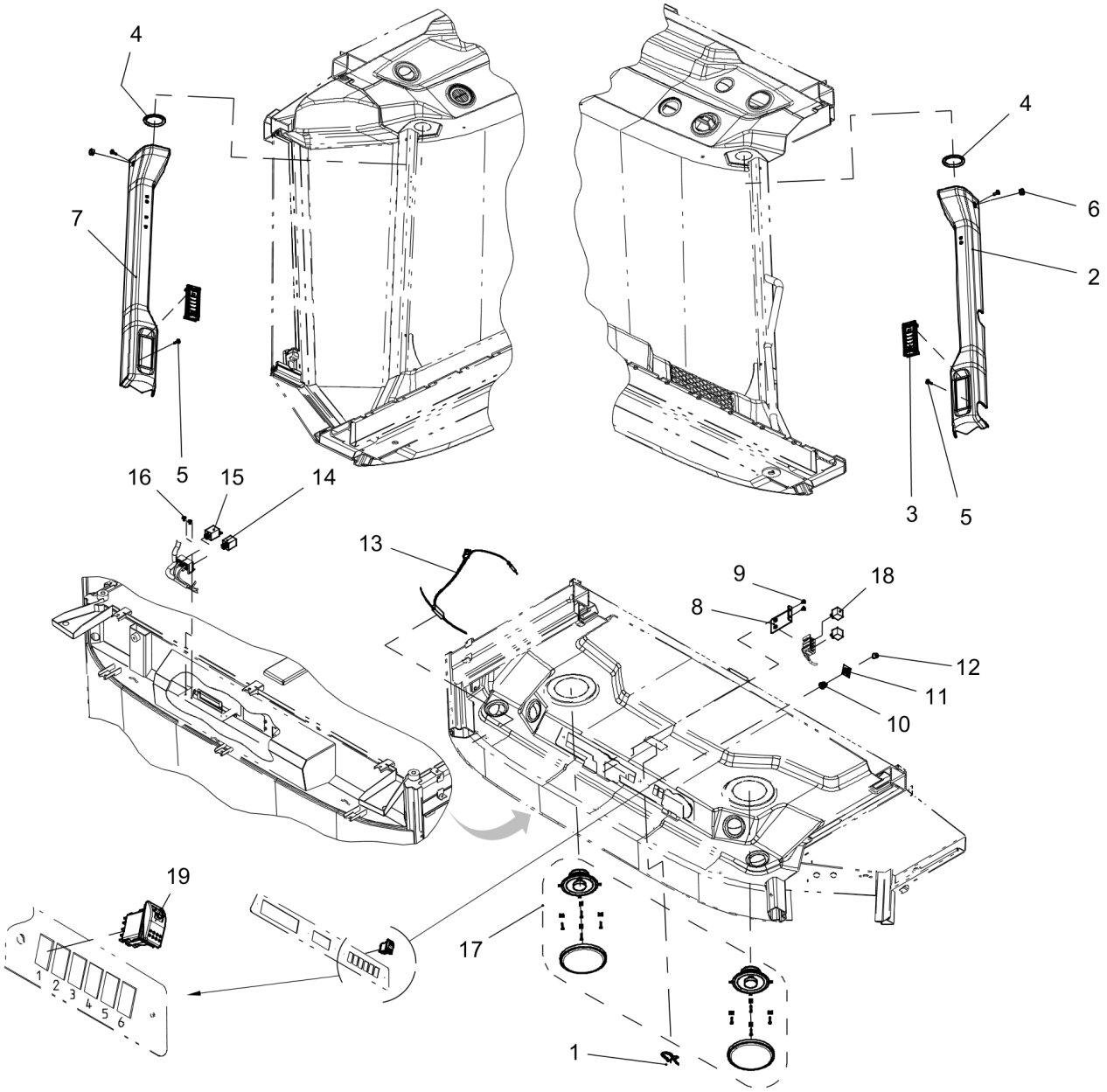

Item	Part No.	Name	Qty	L	SN INFO
1	4812114585	Inner light	1		
2	4812122919	Post cover, left	1		
3	4812114579	Air nozzle	2		
4	-	Rubber profile	0,428		
5	-	Screw	4		
6	-	Plug	2		
7	4812122920	Post cover, right	1		
8	4812125272	Relay bracket	1		
9	-	Screw	2		
10	4812115189	Potentiometer	1		
11	4812116205	Wiper potentiom. Label	1		
12	4812120251	Knob	1		
13	4812114194	Antenna	1		
14	4812115190	Wiper Interval Relay	1		
15	4812115191	Time control unit	1		
16	-	Screw	2		
17		Loud speaker module			
-	4811000268	Loud speaker	2		
-	4811000269	Loud speaker cover	2		
-	4700791970	Speed nut	8		
-	4812119327	Tapping screw	8		
18	4700792422	Relay 24V 20A	2		
19	4812115188	Switch, front wiper	1		

4812122868 Cab asymmetric, comfort AC Box

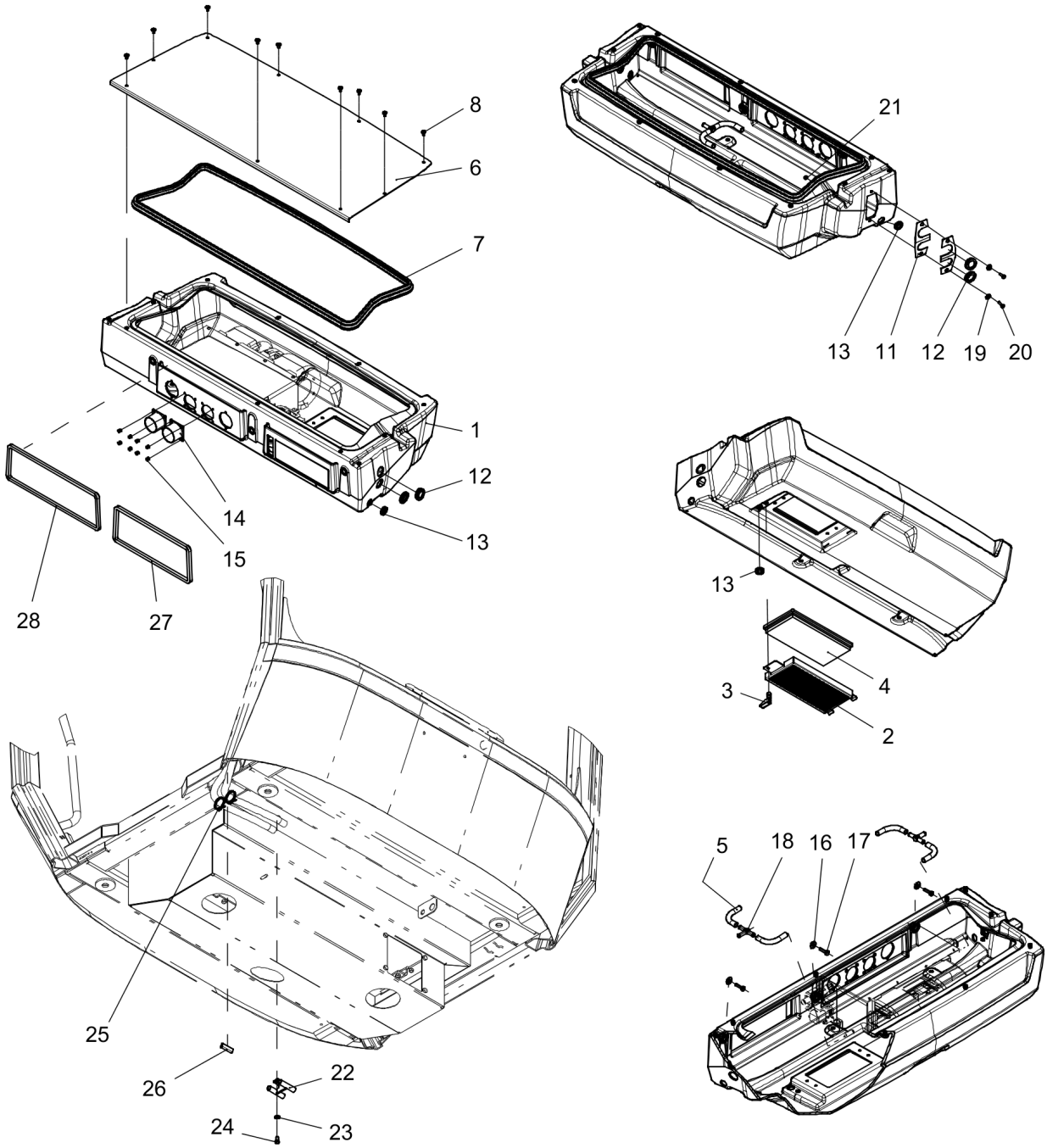

Item	Part No.	Name	Qty	L	SN INFO
1	4812125343	AC Box	1		
2	4812125344	Air filter cover	1		
3	4812125345	Snap lock	1		
4	4812125346	Air filter	1		
5	4812115168	Drain hose	0,46		
6	4812125347	AC Top plate	1		
7	-	Sealing profile	2,616		
8	-	Screw	9		
11	4812125349	Hose plate	2		
12	4700904347	Grommet	4		
13	4700791475	Grommet	3		
14	4812125350	Socket	2		
15	-	Blind rivet	8		
16	4700601003	Washer, 8,4x25x2 mm	3		
17	-	Screw	3		
18	4700923735	Hose connection	2		
19	4700928381	Washer, 6.4x18x1.6 mm	2		
20	-	Screw	2		
21	-	Lock nut	2		
22	4812120241	Floor hose support	1		
23	4700904229	Washer, 8.4x 6x1.5 mm 300HV	1		
24	-	Screw	1		
25	4700313041	Cable ties	2		
26	-	Edge protect profile	0,045		
27	4700792718	Foam rubber	0,953		
28	4700792718	Foam rubber	1,093		

4812122868 Cab asymmetric, comfort Air condition installation (ACC)

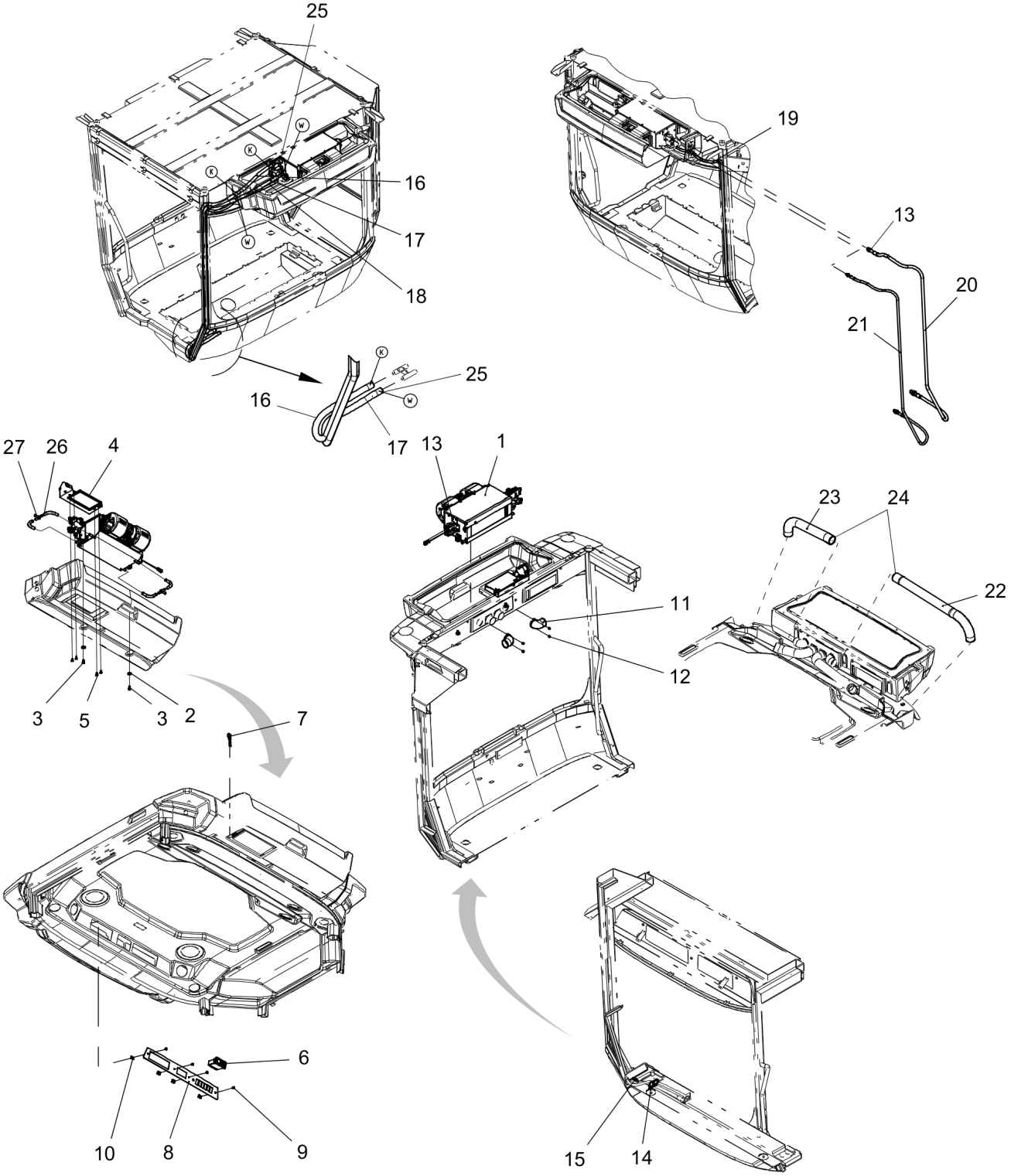

Item	Part No.	Name	Qty	L	SN INFO
1	4812125276	ACC unit	1		
2	4700601003	Washer, 8,4x25x2 mm	2		
3	4700500053	Screw, M8x20 mm 8.8 A2K	2		
4	4812125348	Flapper unit	1		
5	4812161352	Screw	4		
6	4812158289	Micro ECC	1		
7	4812125277	Temp sensor outside	1		
8	4812125278	Panel plate	1		
9	4812161268	Screw	4		
10	4811000458	Speed nut	4		
11	4812125279	Elbow 90, air distribution	2		
12	-	Blind rivet	4		
13	-	Presstite	1		
14	4700313041	Cable ties	2		
15	-	Edge protection profile	0,05		
16	-	Hose	2,79		
17	-	Hose	2,83		
18	4812115168	Drain hose	2,32		
19	4812115168	Drain hose	2,06		
20	4812126351	Refrigerant hose	1		
21	4812126352	Refrigerant hose	1		
22	-	Spiral hose	0,92		
23	-	Spiral hose	0,67		
24	4700313041	Cable ties	2		
25	-	Hose clamp	4		
26	4812115168	Drain hose	0,92		
27	4700923735	Hose connection	2		

4812122868 Cab asymmetric, comfort Door, left

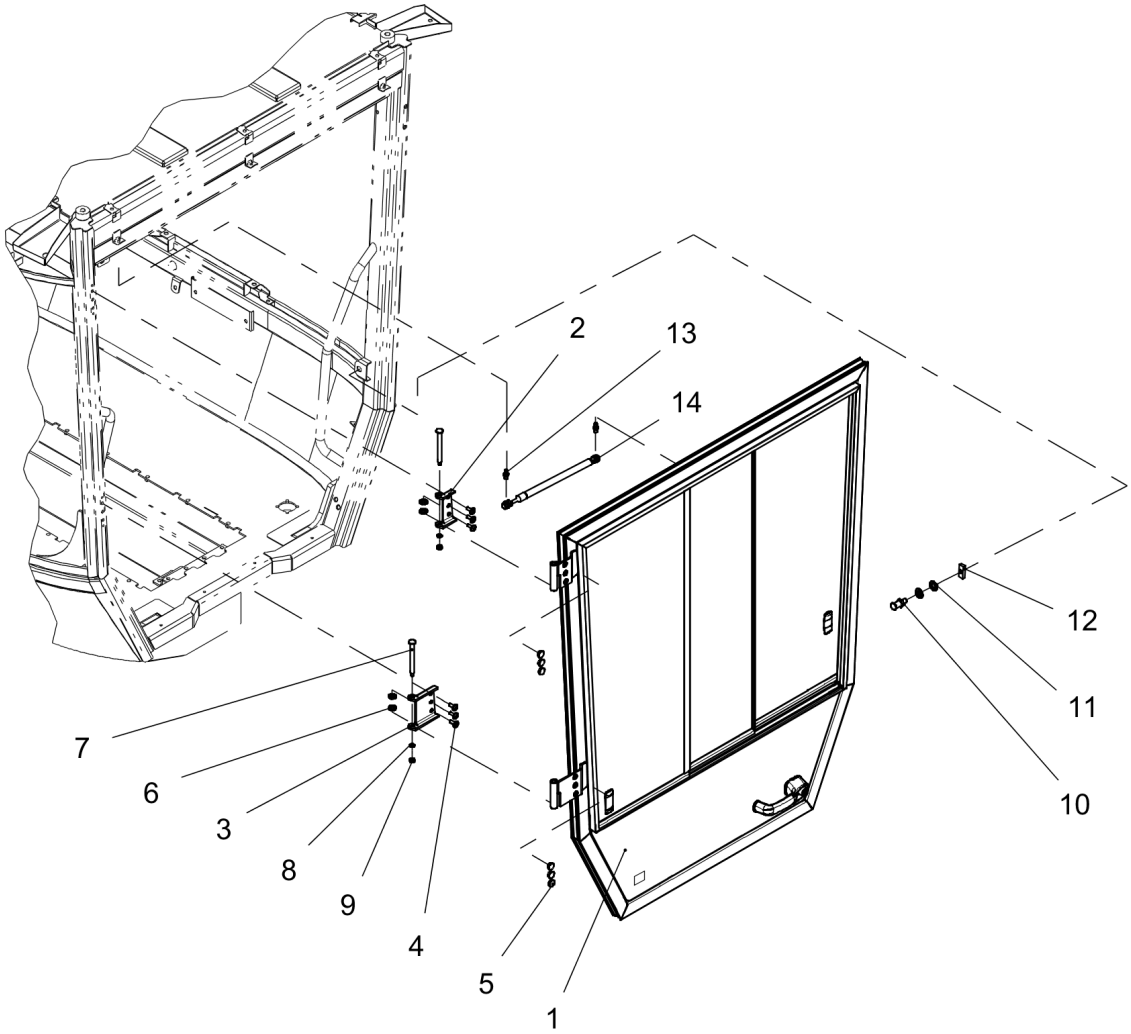

Item	Part No.	Name	Qty	L	SN INFO
1	4812122883	Door	1		
2	4812122882	Hinge plate, top	1		
3	4812122881	Hinge plate, bottom	1		
4	-	Screw	6		
5	-	End plug	6		
6	-	Brass washer	4		
7	4812119449	Pin	2		
8	-	Shim ring	2		
9	-	Lock nut	2		
10	4812114598	Bolt	1		
11	4812114602	Washer	2		
12	4812114603	Plate	1		
13	4812115215	Ball stud	2		
14	4812120272	Gas spring	1		

4812122868 Cab asymmetric, comfort 4812122883 Door

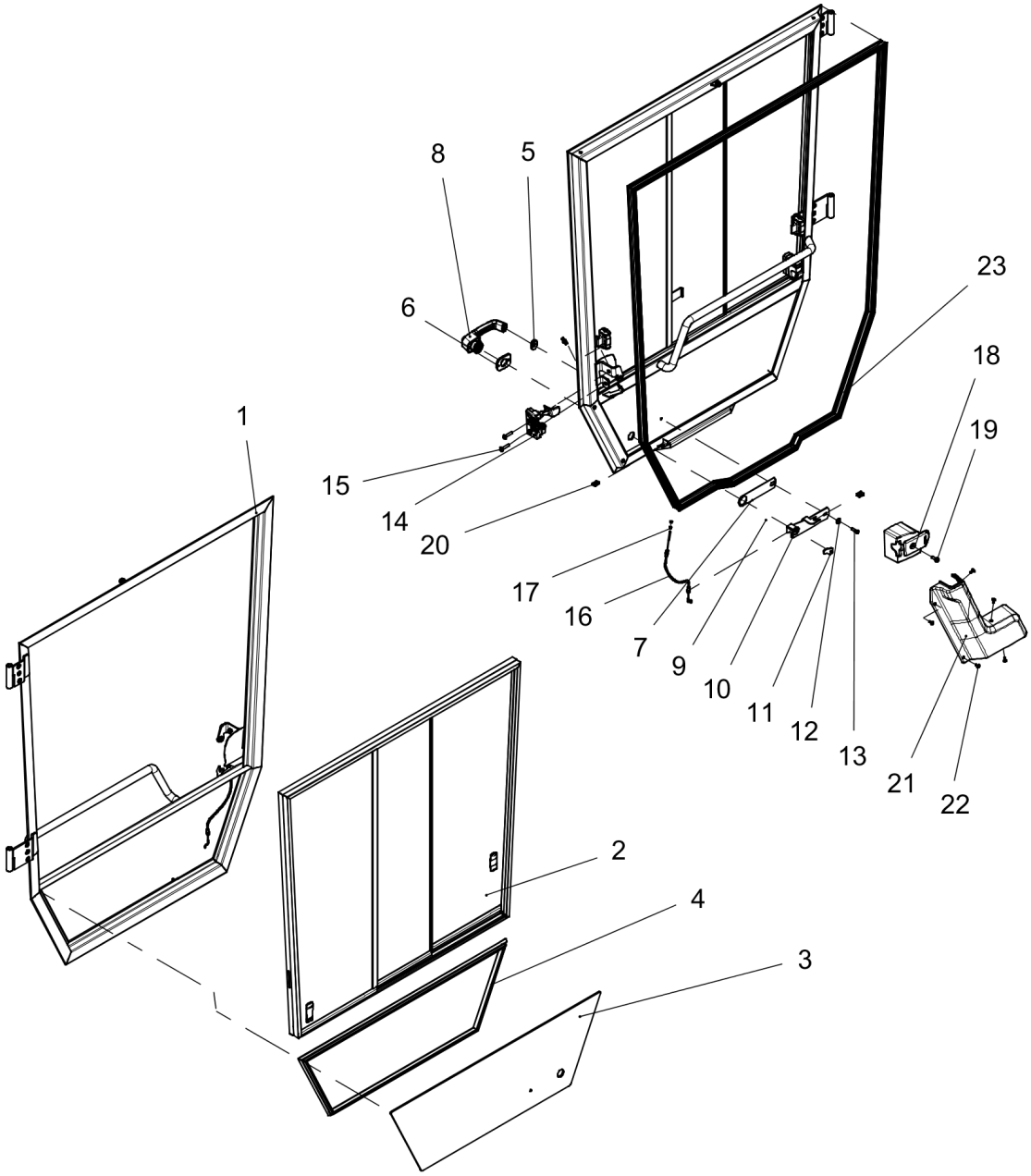

Item	Part No.	Name	Qty	L	SN INFO
1	4812125320	Door	1		
2	4812125321	Sliding window	1		
3	4812122903	Door screen bottom	1		
4	4812161098	Seal list	2,31		
5	4812119435	Support	1		
6	4812119436	Support	1		
7	4812119437	Support plate	1		
8	4812115203	Handle	1		
9	4812119438	Support	1		
10	4812125322	Baffle bracket	1		
11	4812125323	Push button handle	1		
12	-	Gasket	1		
13	-	Screw	1		
14	4812125324	Direction lock	1		
15	-	Screw	2		
16	4812125325	Bowden cable	1		
17	4700570002	Nut M4	2		
18	4812125326	Lock cover	1		
19	-	Screw	1		
20	4811000458	Speed nut	3		
21	4812125327	Door cover	1		
22	-	Screw	5		
23	-	Sealing profile	4,85		

4812122868 Cab asymmetric, comfort 4812125321 Sliding window, left

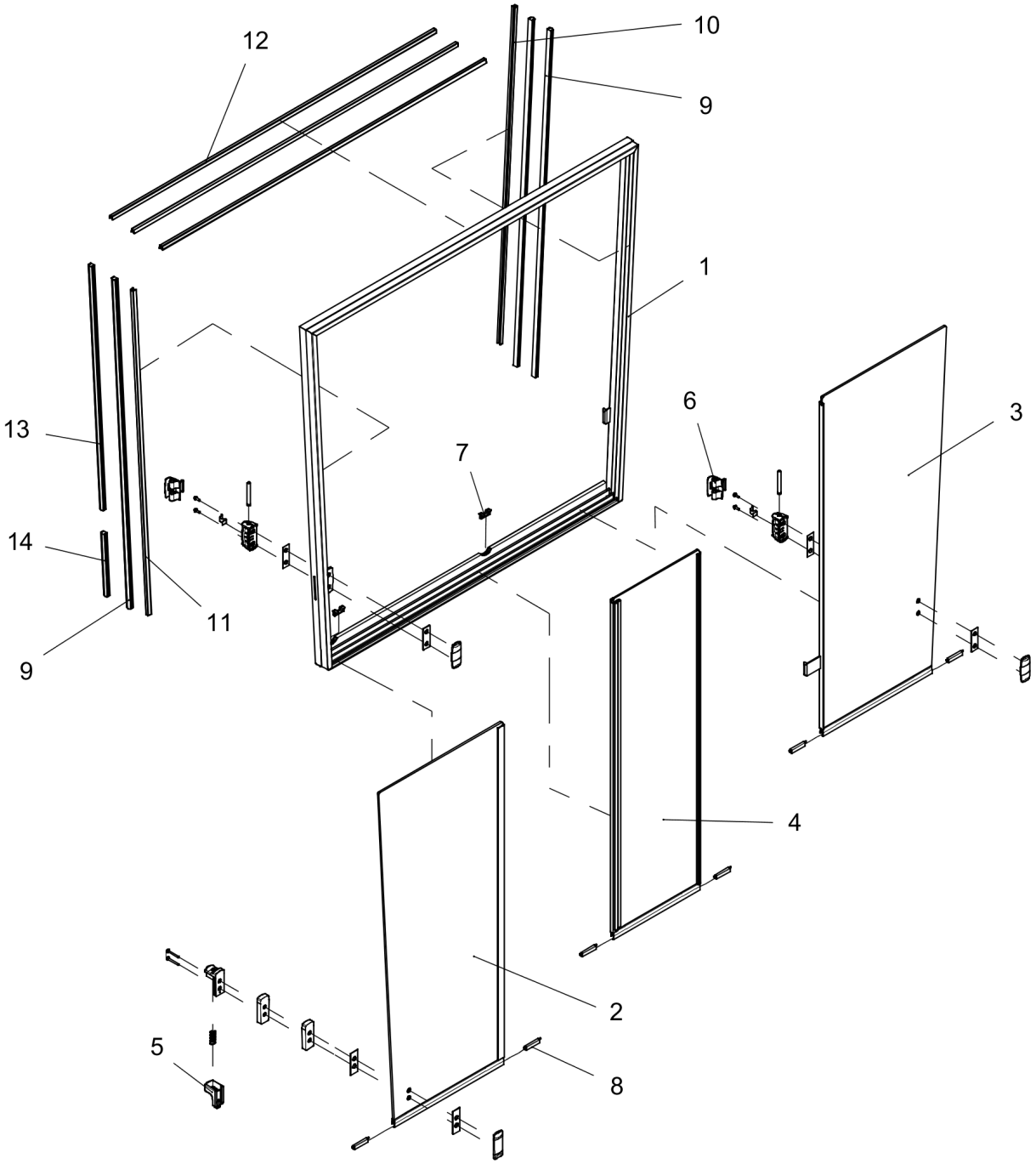

Item	Part No.	Name	Qty	L	SN INFO
1	-	Window frame	1		
2	4812126365	Sliding screen, front	1		
3	4812126366	Sliding screen, rear	1		
4	4812126356	Sliding screen, middle	1		
5	-	Handle	1		
6	-	Window lock	2		
7	-	Bracket	2		
8	-	Guide	6		
9	4812161155	Strip	2,976		
10	4812160877	Window seal	0,964		
11	4812160877	Window seal	0,978		
12	4812160877	Window seal	3,288		
13	4812161155	Strip	0,736		
14	4812161155	Strip	0,188		

4812122868 Cab asymmetric, comfort Horn, power converter, protections

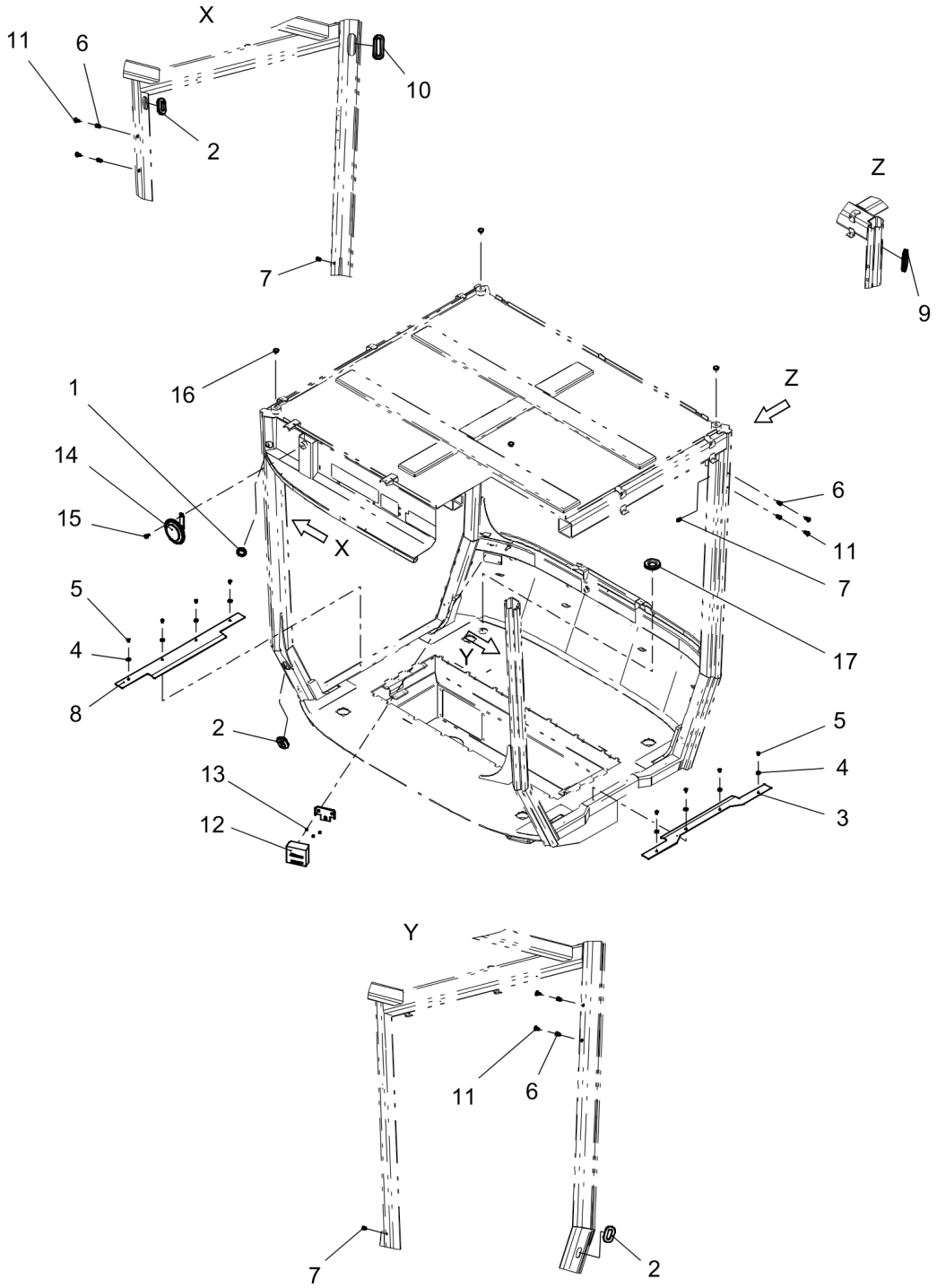

Item	Part No.	Name	Qty	L	SN INFO
1	4700904347	Grommet	2		
2	4812115228	Grommet	3		
3	4812122885	Entrance plate left	1		
4	-	Washer	8		
5	4812161371	Screw	8		
6	4700792103	Blind insert nut	6		
7	-	Blind insert nut	4		
8	4812122886	Entrance plate right	1		
9	4700902379	Edge trim	0,177		
10	4700902379	Edge trim	0,19		
11	-	Plug	6		
12	4812112017	Power converter	1		
13	-	Tap screw	3		
14	4700999014	Horn	1		
15	-	Screw	1		
16	-	Plug	4		
17	-	Edge protection profile	0,126		

4812122868 Cab asymmetric, comfort Rear screen

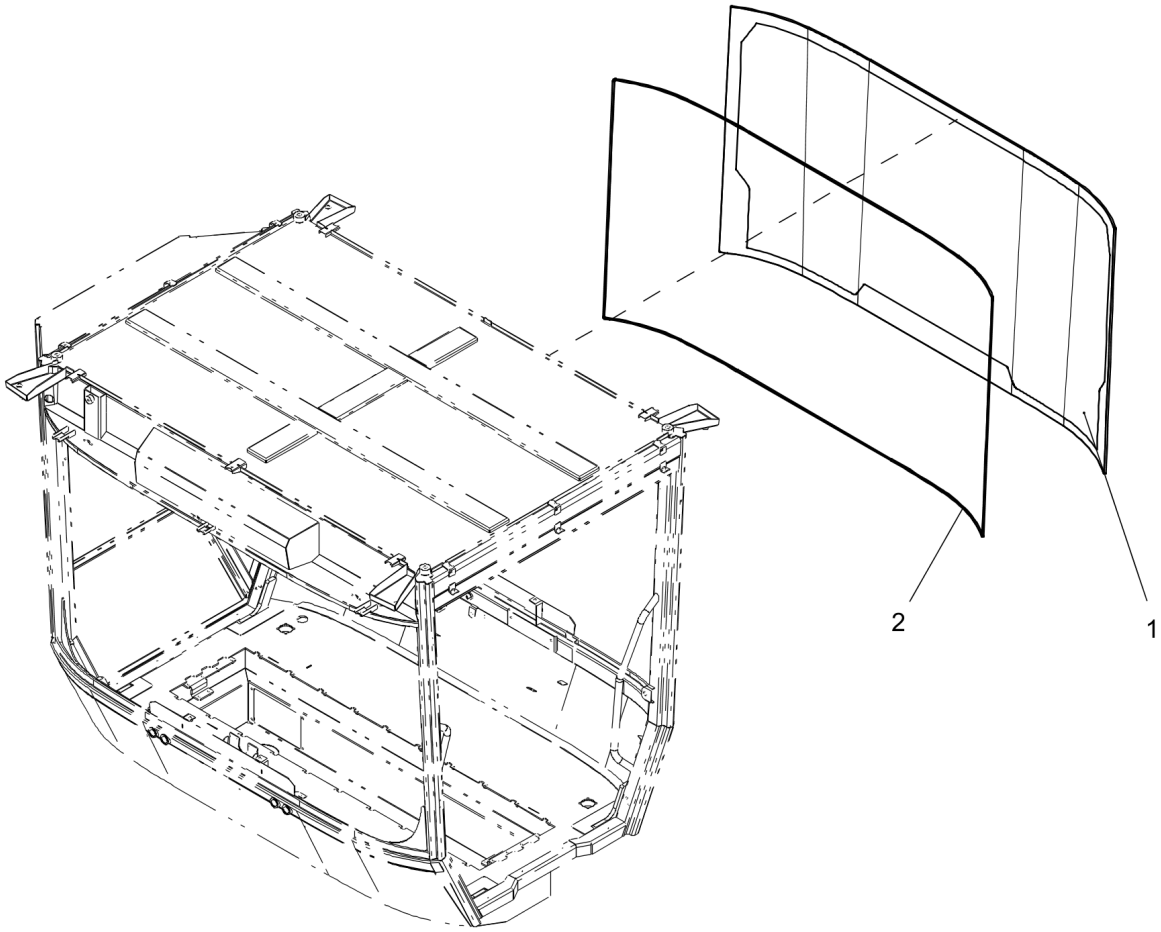

Item	Part No.	Name	Qty	L	SN INFO
1	4812126367	Rear screen	1		
2	4812159184	Rubber list	5,88		

4812122869 Cab asymmetric, std 4812122869 Cab asymmetric std

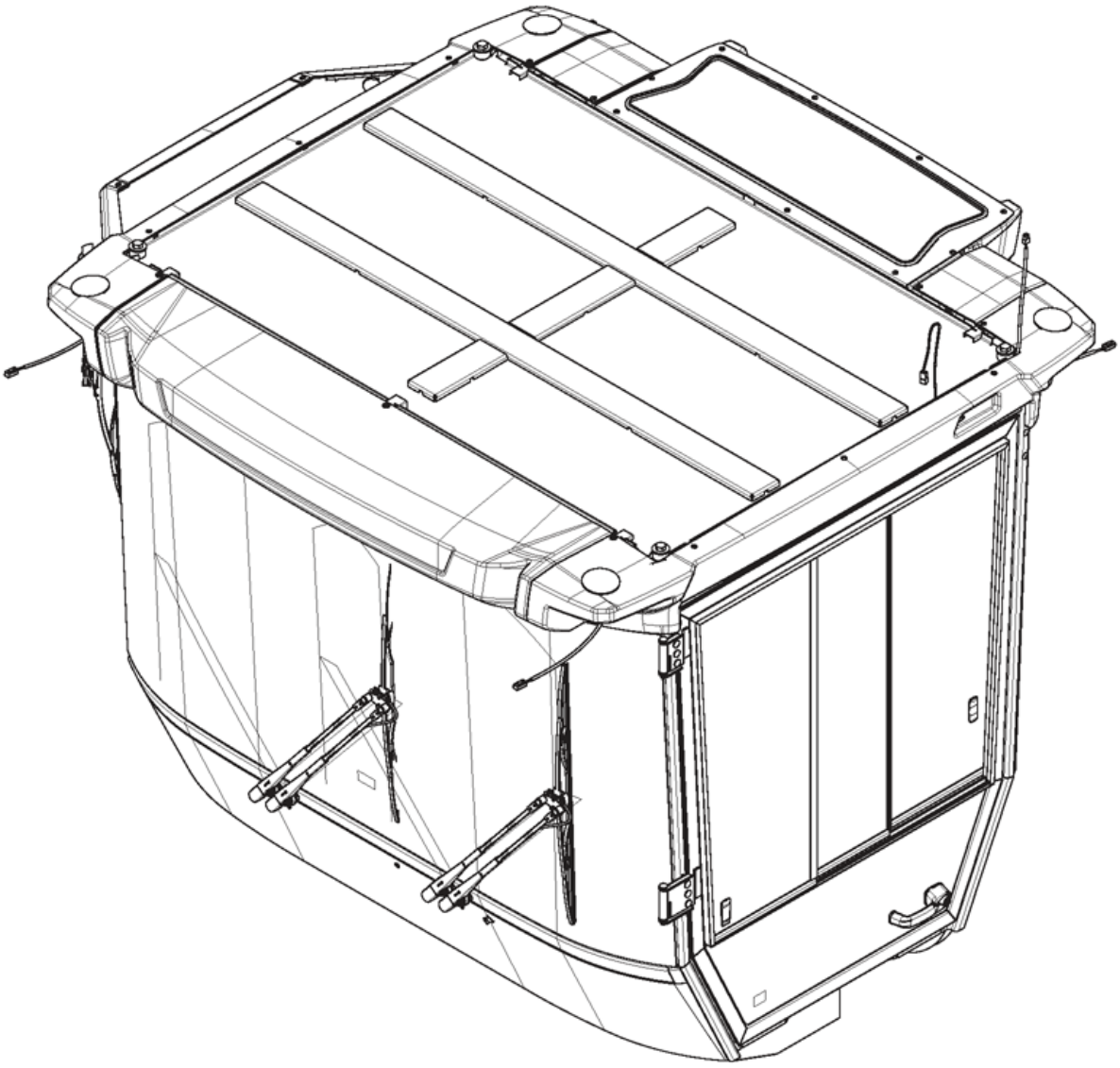

Item	Part No.	Name	Qty	L	SN INFO
1	-	Cab frame			
2		Roof edges			
3	4812125313	Floor mat			
4		Windscreen and wipers, front			
5		Screens, wipers and switches, cab right side			
6		Interior, ceiling (lights, nozzles, hammer, hook, switch 1&2)			
7		Ventilation hoses, rear washer/wiper, power sockets			
9		AC Box			
10		Heater installation			
11		Door, left			
12		Horn, power converter, protections			
13		Rear screen			

4812122869 Cab asymmetric, std Heater installation

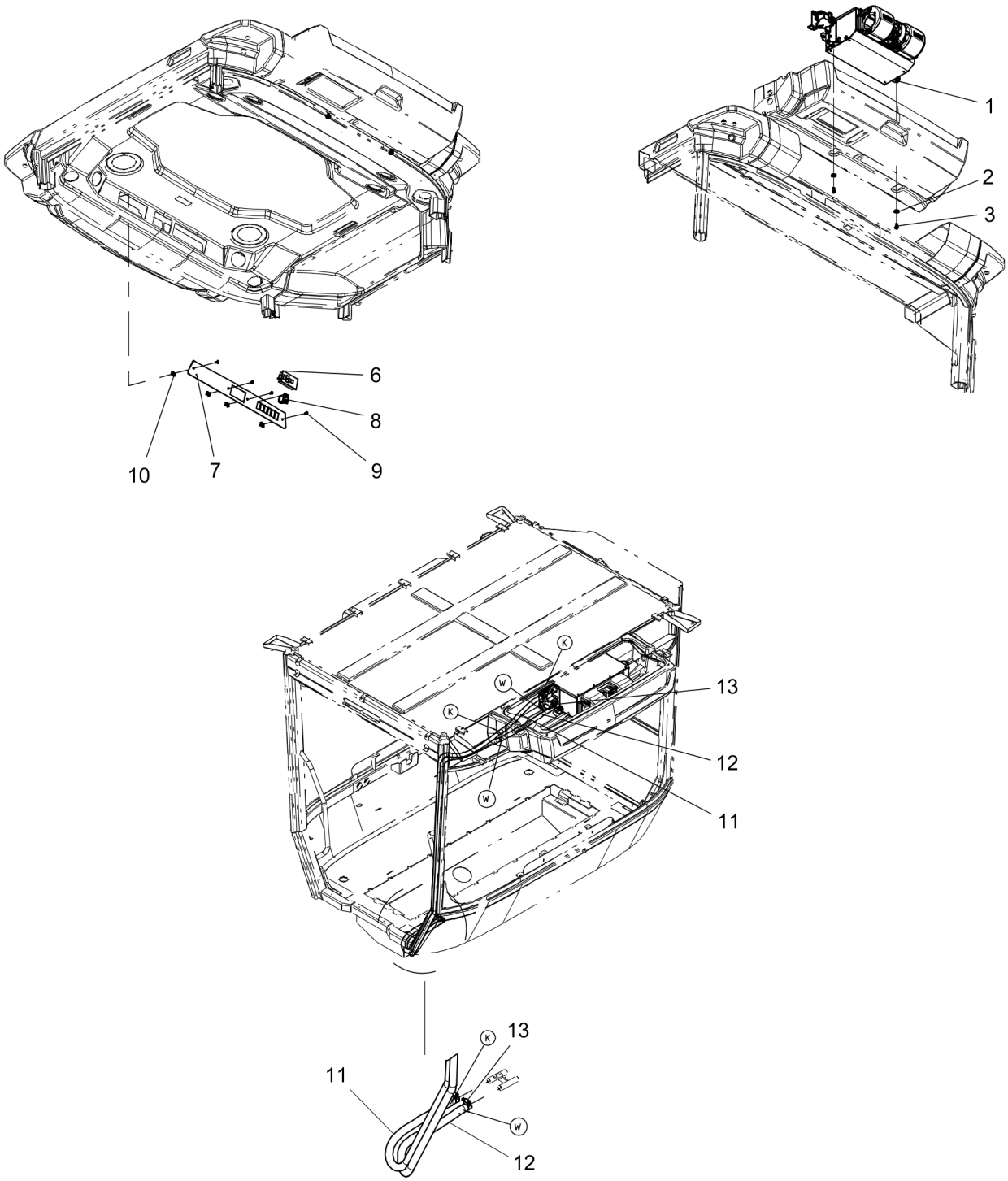

Item	Part No.	Name	Qty	L	SN INFO
1	4812126358	Heater unit	1		
2	4700601003	Washer, 8,4x25x2 mm	2		
3	-	Screw	2		
6	4812126359	Control panel heater	1		
7	4812126364	Panel plate	1		
8	4812115192	Switch	1		
9	-	Screw	4		
10	4811000458	Speed nut	4		
11	-	Hose	2,79		
12	-	Hose	2,83		
13	-	Clamp	4		

4812122869 Cab asymmetric, std Rear screen

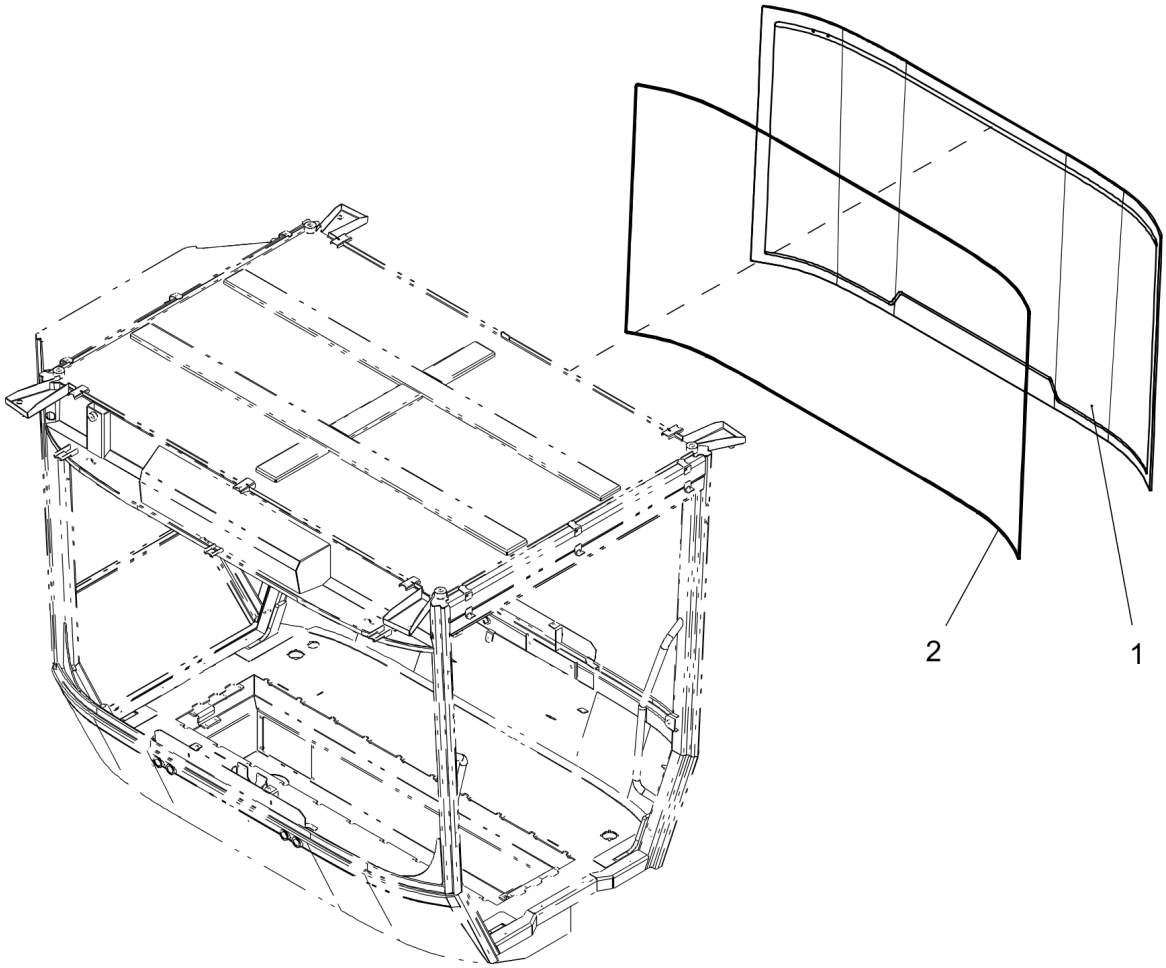

Item	Part No.	Name	Qty	L	SN INFO
1	4812122897	Windscreen	1		
2	4812159184	Rubber list	5,883		

Operator platform ROPS module

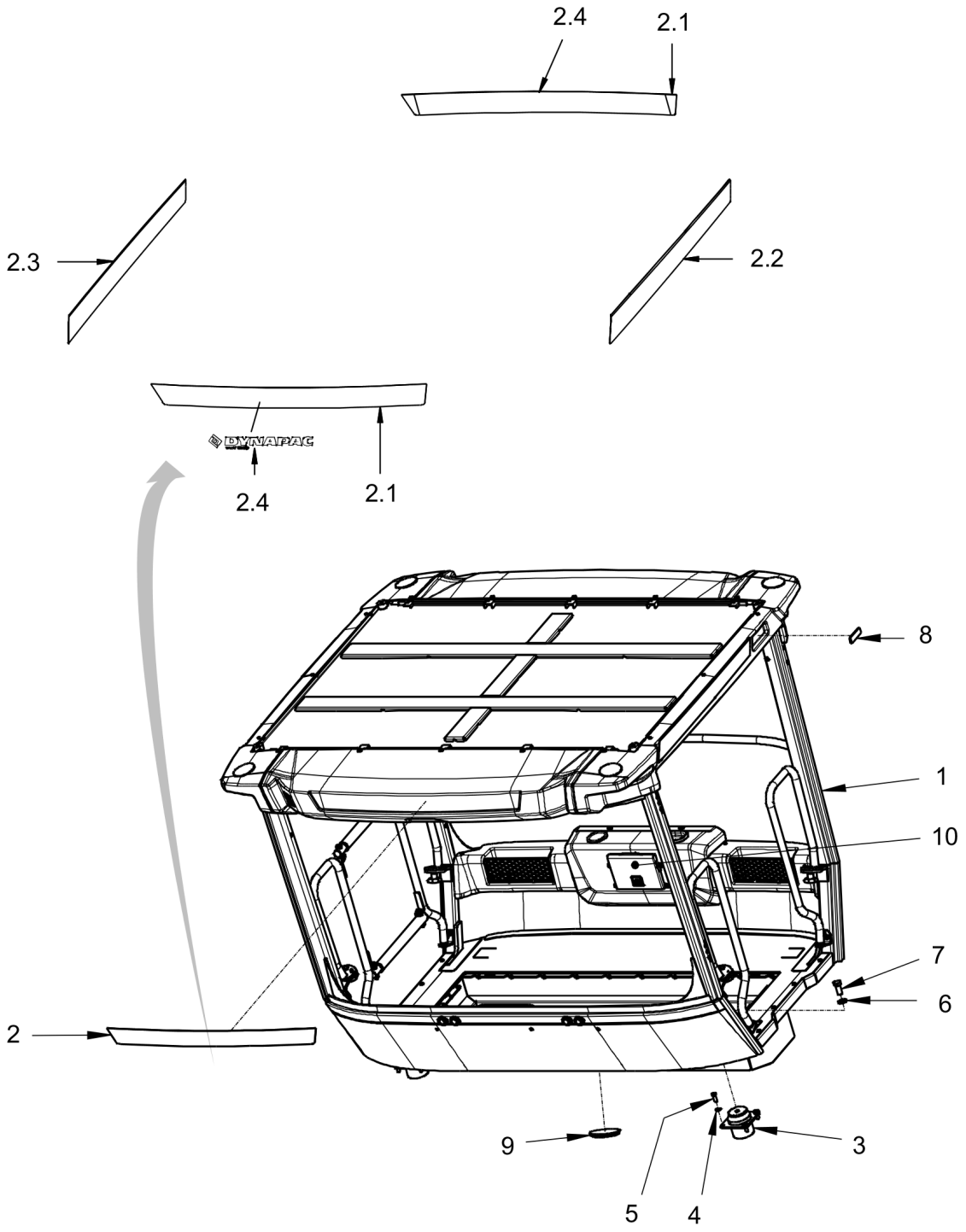

Item	Part No.	Name	Qty	L	SN INFO
1	4812122870	ROPS	1		
2		Decal kit	1		
2.1	4812127983	Decal cosmetic, White	2		
2.2	4812127979	Decal cosmetic, White	1		
2.3	4812127982	Decal Cosmetic, White	1		
2.4	4812127715	Decal "FAYAT DYNAPAC", 350-RD	2		
3	4812125174	Shock absorber	4		
4	4700904231	Washer, 13x24x2 mm 300 HV	16		
5	4700500046	Hex. head screw M12x030H	16		
6	4700904233	Steel plain washer 21x36x3	4		
7	4700500205	Screw	4		
8	4700377744	Reflector, yellow	2		
9	4700379992	Plug	1		
10		Manual box	1		

4812122870 ROPS 4812122870 ROPS

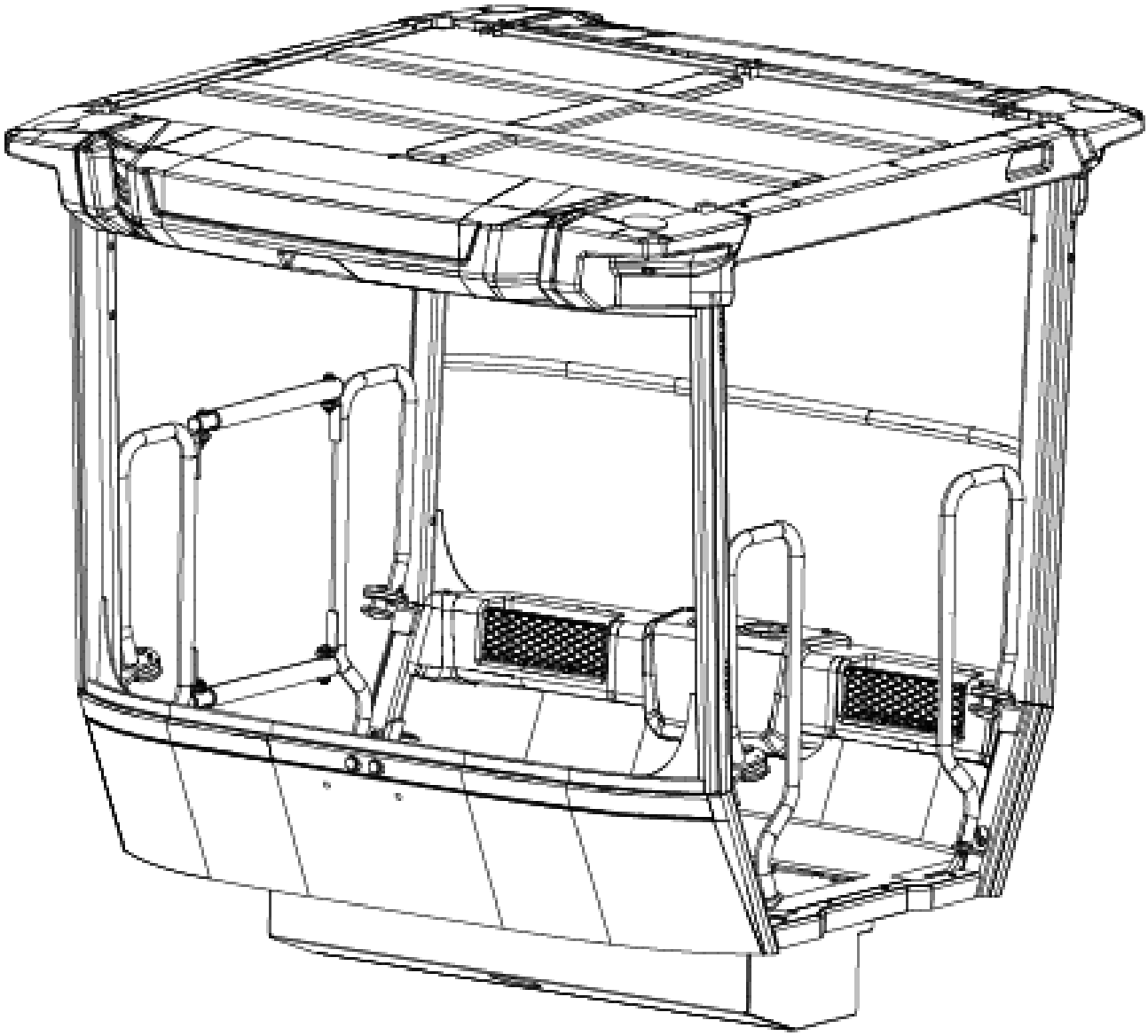

Item	Part No.	Name	Qty	L	SN INFO
1	-	Frame ROPS			
2		Horn, power converter, protections			
3	4812125313	Floor mat			
4		Handrails, harness, power sockets			
5		Roof edges			
6		Rear covers, storage			

4812122870 ROPS Handrails, harness, power sockets

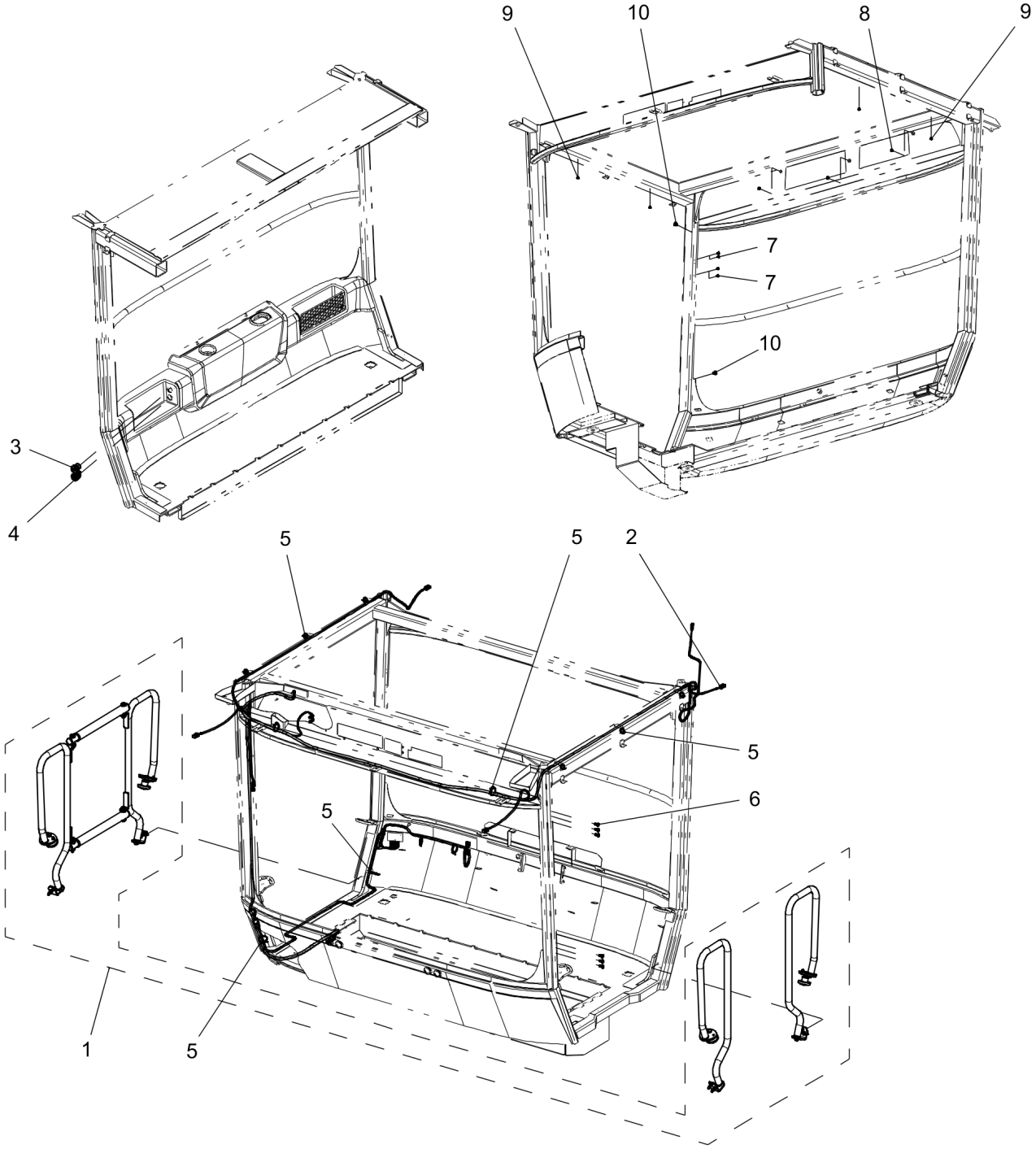

Item	Part No.	Name	Qty	L	SN INFO
1		Handrail assembly	1		
2	4812125302	Cable harness, ROPS	1		
3	4700395816	Plug socket 24V	1		
4	4812110560	Power socket 12V	1		
5	4700313041	Cable ties	12		
6	-	Plug	6		
7	-	Plug	6		
8	4700926215	Protective plug	3		
9	-	Blind plug	4		
10	-	Plug	4		

4812122870 ROPS Handrail assembly

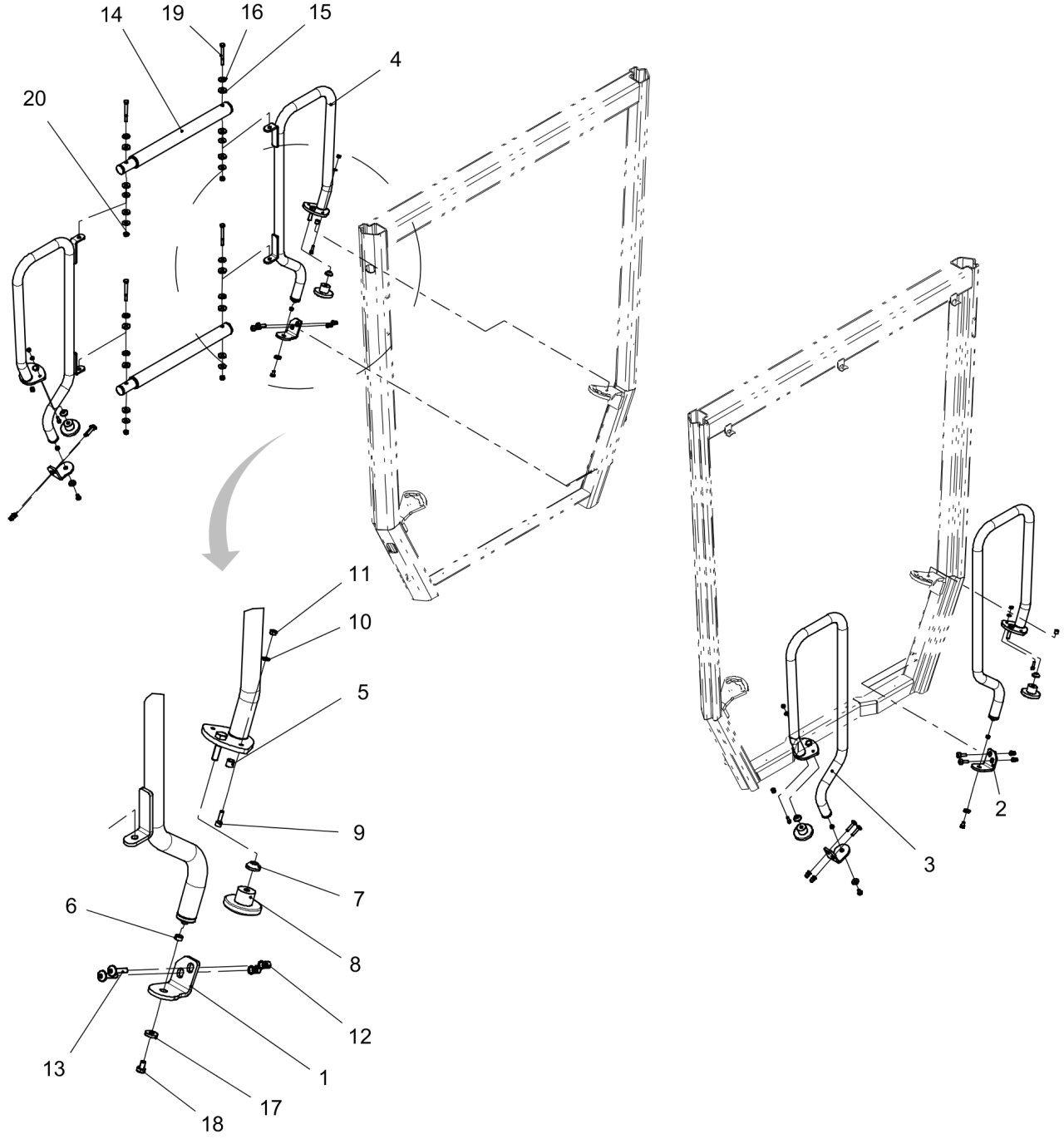

Item	Part No.	Name	Qty	L	SN INFO
1	4812125297	Bracket	2		
2	4812125298	Bracket	2		
3	4812125299	Handle bar left	2		
4	4812125300	Handle bar right	2		
5	4700792447	Plastic bushing	4		
6	4700792448	Plastic bushing	4		
7	4700370286	Washer	4		
8	4700499174	Knob	4		
9	4700508025	Screw, M6x20 mm 8.8 A2K	4		
10	4700904228	Washer 6,4x12x1,5	4		
11	-	Hexagon nut	4		
12	4700792103	Blind insert nut	8		
13	-	Screw	8		
14	4812125287	Telescopic handrail	2		
15	4812125301	Seal washer	12		
16	-	Gasket	12		
17	-	Gasket	4		
18	-	Hexagon screw	4		
19	-	Hexagon screw	4		
20	4700791182	Nut, M8 -8 DIN985	4		

4812122870 ROPS Roof edges

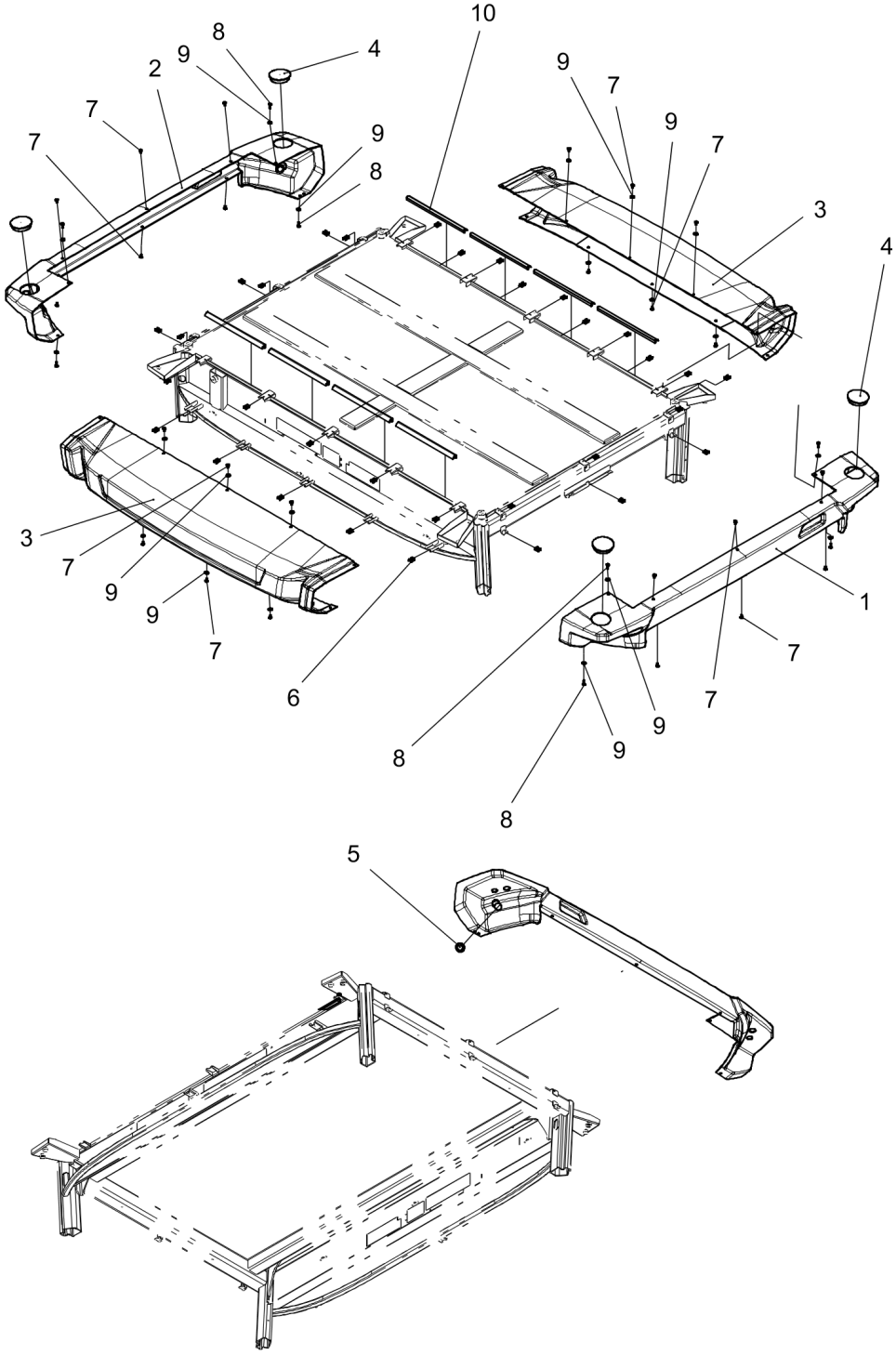

Item	Part No.	Name	Qty	L	SN INFO
1	4812122888	Roof cover left	1		
2	4812125303	Roof cover right	1		
3	4812125304	Roof cover front	2		
4		Windscreen and wipers, front	4		
5	4700904347	Grommet	4		
6	4812114567	Speed nut	24		
7	-	Screw	16		
8	-	Screw	8		
9	4700928381	Washer, 6.4x18x1.6 mm	20		
10	-	Sealing profile	2,87		

4812122870 ROPS Rear covers, storage

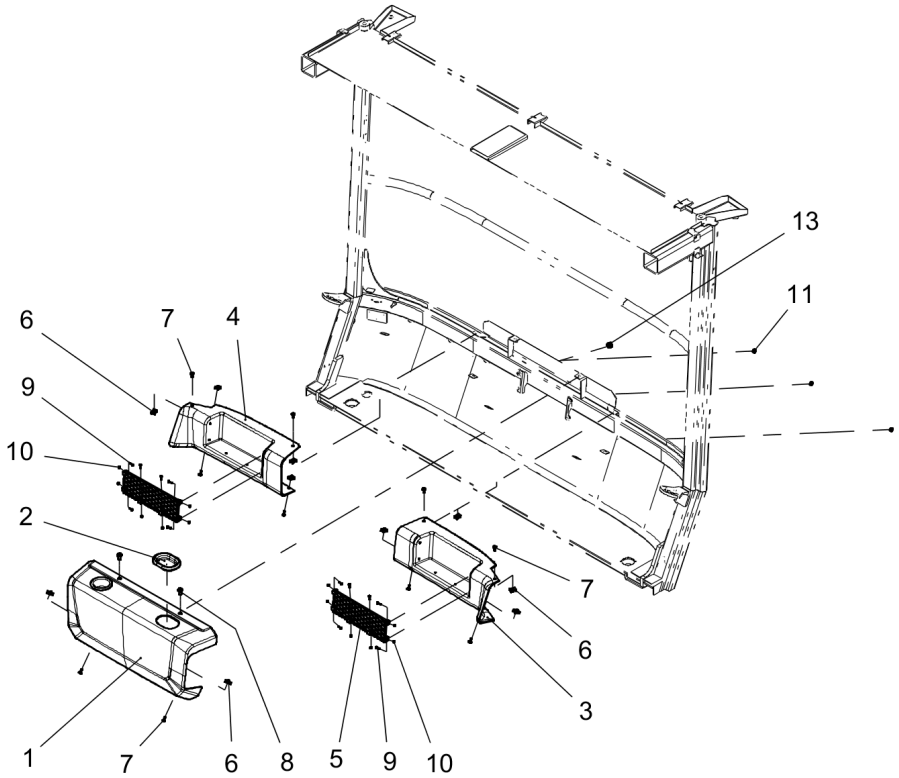

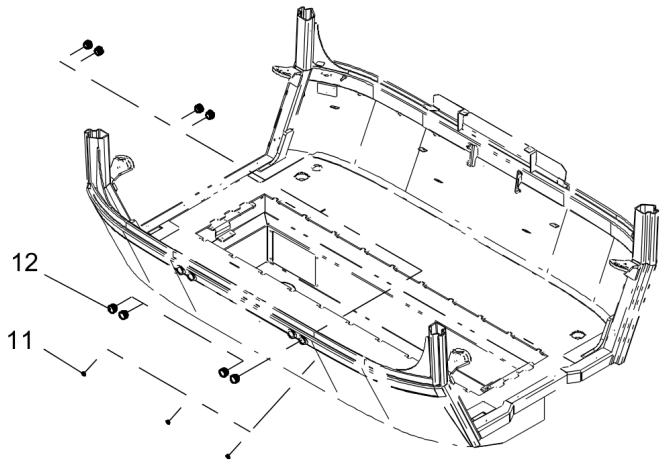

Item	Part No.	Name	Qty	L	SN INFO
1	4812125305	Cover, rear middle	1		
2	4812122917	Cap storage	1		
3	4812122913	Cover rear	1		
4	4812122914	Cover rear	1		
5	4812122915	Storage net	2		
6	4812114566	Turn fastener	10		
7	4812161352	Screw	10		
8	-	Screw	2		
9	-	Screw	12		
10	4700570002	Nut M4	12		
11	-	Plug	6		
12	-	Plug	8		
13	-	Plug	1		

Operator platform Manual box

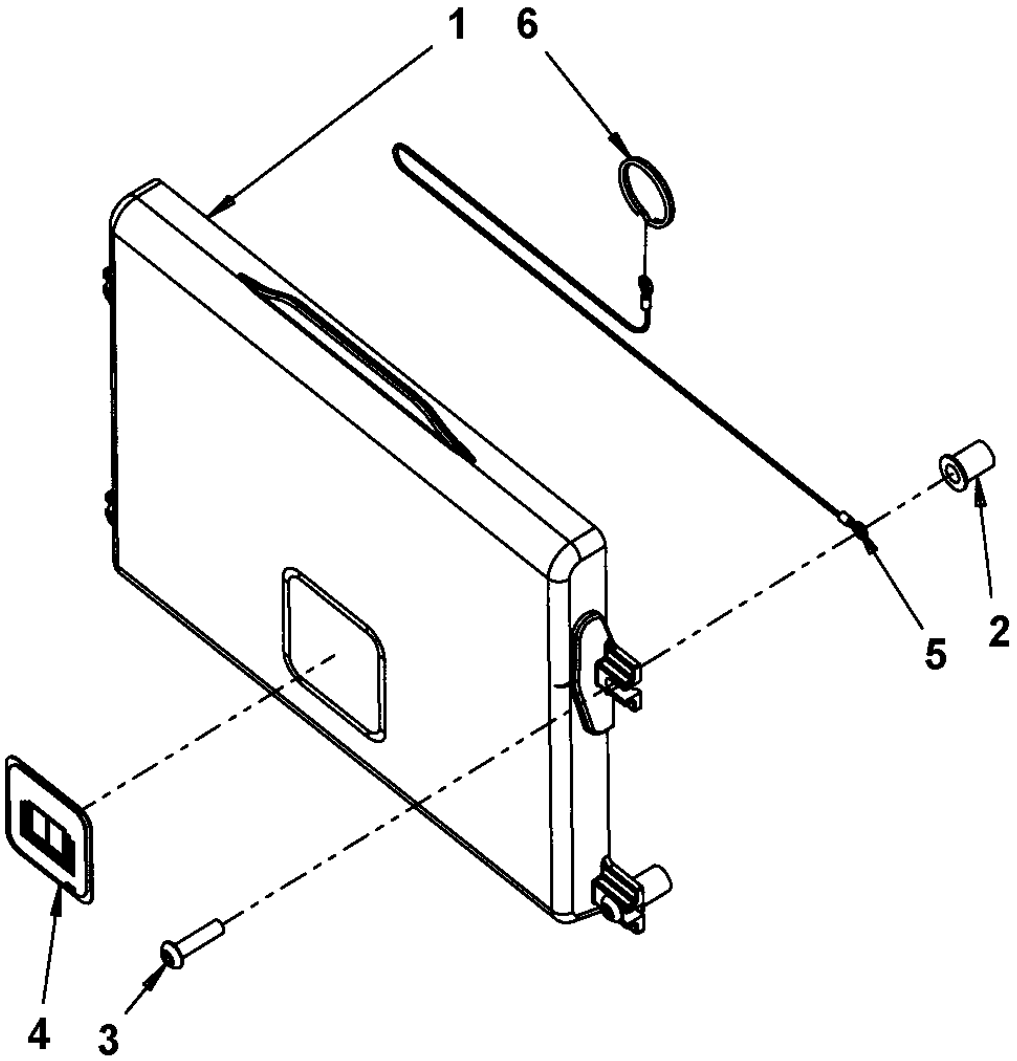

Item	Part No.	Name	Qty	L	SN INFO
1	4700383705	Instruction manual box	1		
2	4700792536	Rubber nut	4		
3	4700792589	Screw	4		
4	4700903425	Safety decal "READ SAFETY INSTRUCTIONS"	1		
5	4700384584	Wire	1		
6	4700358254	Key-ring	1		

Operator platform Mirrors

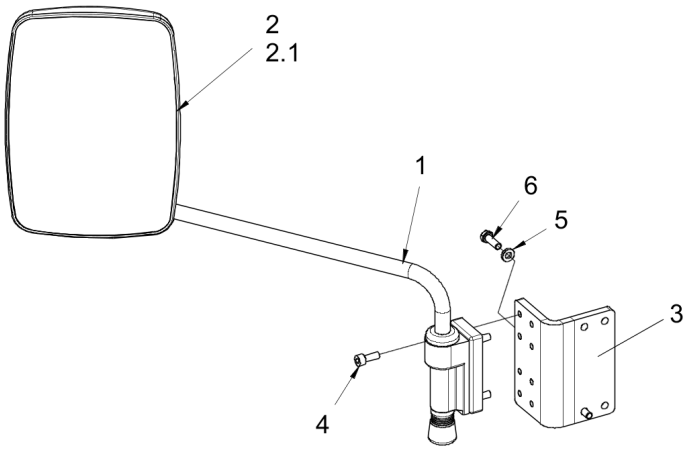

Item	Part No.	Name	Qty	L	SN INFO
1	4812125409	Mirror bracket	1		
2	4812125407	Mirror	1		
2.1	-	Mirror glass	1		
3	4812125405	Bracket	1		
4	4700508092	Screw	4		
5	4700904556	Steel plain washer 8,4x16x3,0	2		
6	4700500021	Screw, M8x25 mm 8.8 A2K	2		

Operator platform Mirrors

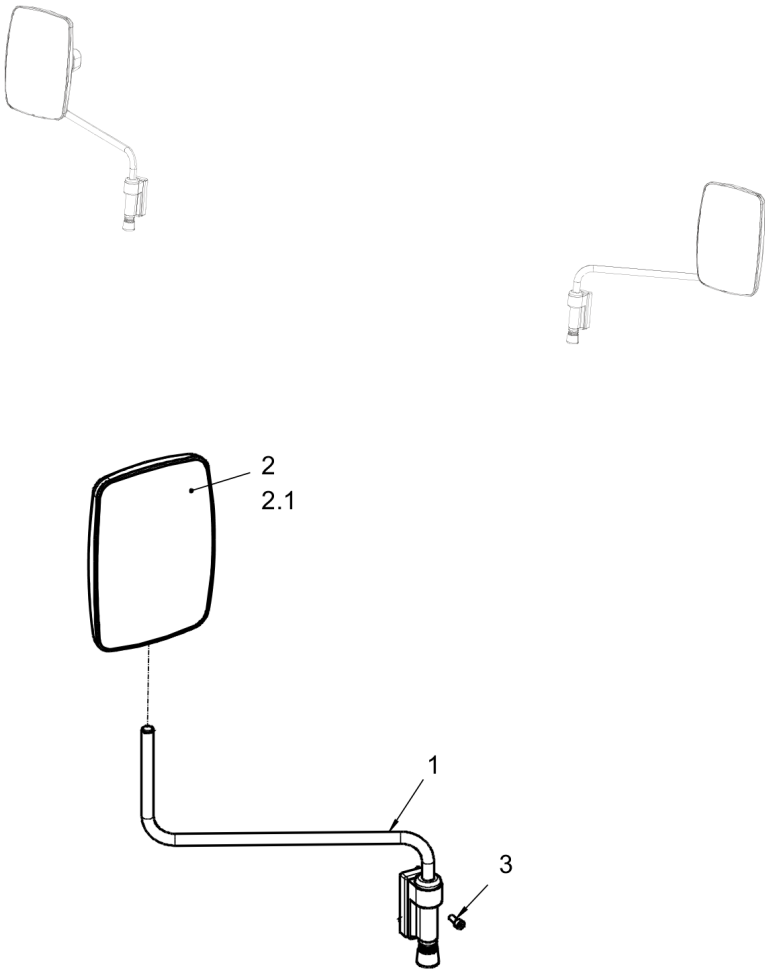

Item	Part No.	Name	Qty	L	SN INFO
1	4812125409	Mirror bracket	1		
2	4812125407	Mirror	1		
2.1	-	Mirror glass	1		
3	4700508092	Screw	4		

Operator platform Seat frame module

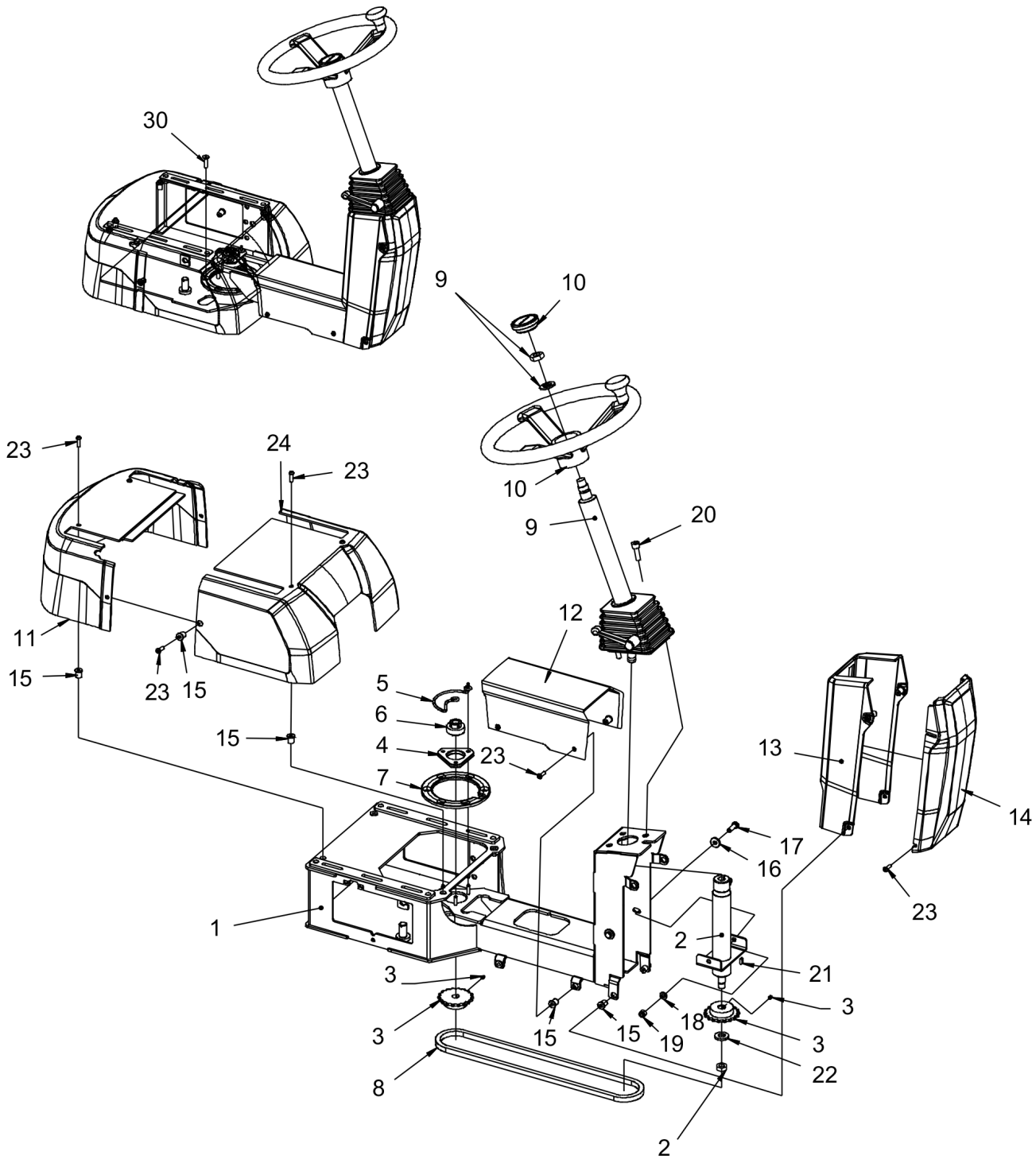

Item	Part No.	Name	Qty	L	SN INFO
1	4812122997	Seat frame	1		
2	4700359919	Shaft	1		
3		Chain wheel assembly	2		
3	4700359916	Chain wheel	1		
3	4700516040	Threaded pin	1		
4	4700903917	Bearing outer	1		
5	4700372672	Chain guard	1		
6	4700903918	Bearing inner	1		
7	4700372965	Lock ring	1		
8	4812122998	Chain	1		
9	4700391163	Steering column	1		
10	4700372964	Steering wheel	1		
11	4812126198	Cover	1		
12	4812123138	Cover	1		
13	4812123139	Cover	1		
14	4812123140	Cover	1		
15	4700792539	Rubber nut	14		
16	4700904640	Washer, 8.4x22x3 mm 300HV	2		
17	4700500021	Screw, M8x25 mm 8.8 A2K	2		
18	4700904229	Washer, 8.4x 6x1.5 mm 300HV	2		
19	4700586003	Lock nut M8	2		
20	4700508029	Cylinder screw	3		
21	4700350009	Flat key	1		
22	4700904214	Washer 15x30x4 300 HV	1		
23	4700791524	Screw, M6 x 20 mm A2-70	14		
24	4812126199	Cover	1		
30	4700902520	Screw	6		

Operator platform Seat frame adapter module

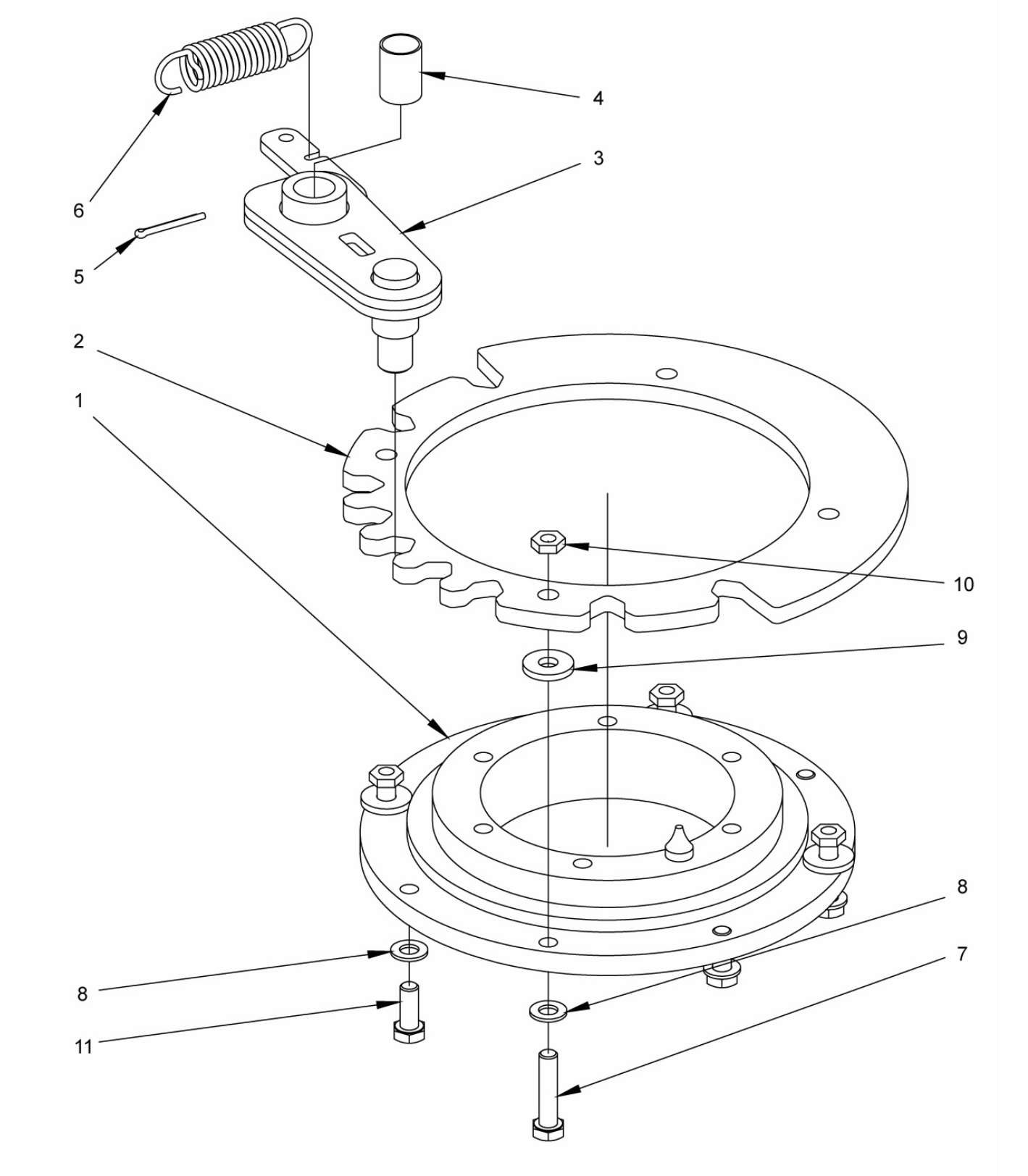

Item	Part No.	Name	Qty	L	SN INFO
1	4700359125	Ball bearing	1		
2	4812120847	Locking disc	1		
3	4812119788	Coupling link	1		
4	4700359819	Bushing	1		
5	4700630008	Pin	1		
6	4700359043	Spring	1		
7	4700792678	Screw	4		
8	4700904229	Washer, 8.4x 6x1.5 mm 300HV	8		
9	4700904640	Washer, 8.4x22x3 mm 300HV	4		
10	4700573008	Nut M8	4		
11	4700947679	Hexagon head screw	4		

Operator platform Control module, sliding/turning

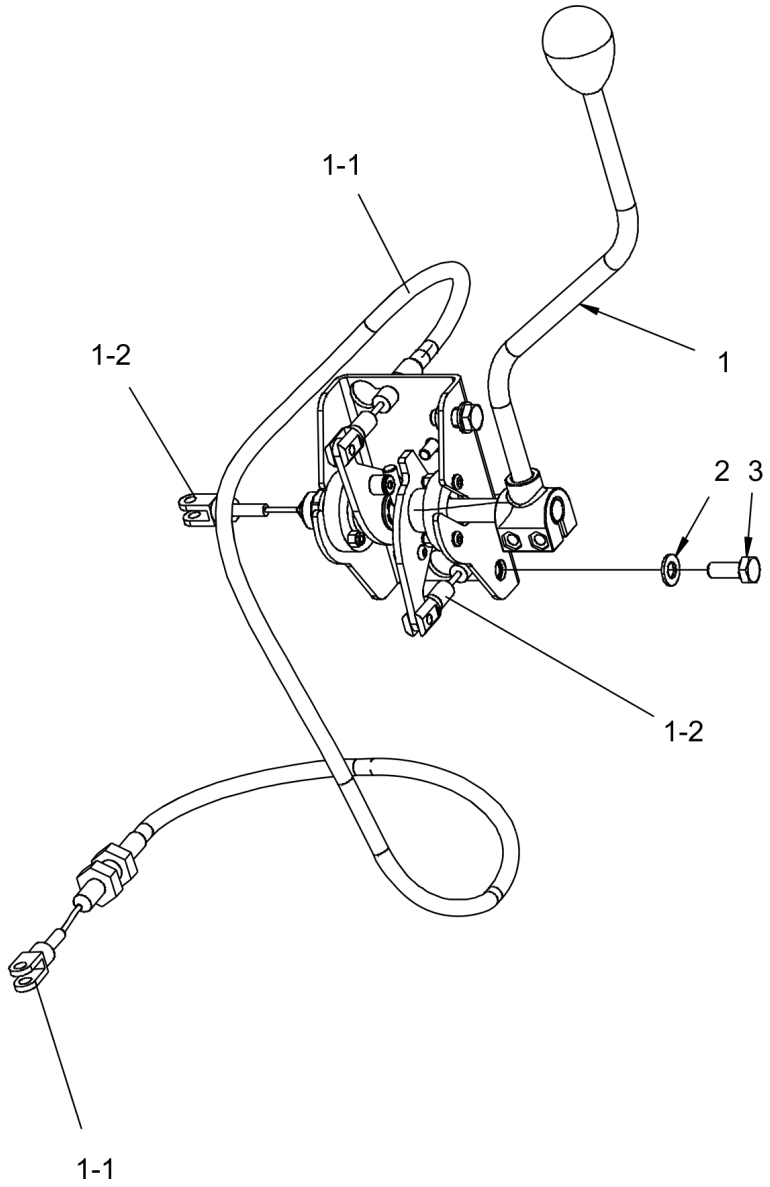

Item	Part No.	Name	Qty	L	SN INFO
1	4812122991	Control	1		
1-1	4812122992	Control cable	1		
1-2	4812122993	Control cable	1		
2	4700904229	Washer, 8.4x 6x1.5 mm 300HV	2		
3	4700500053	Screw, M8x20 mm 8.8 A2K	2		

Operator platform Floor cassette module

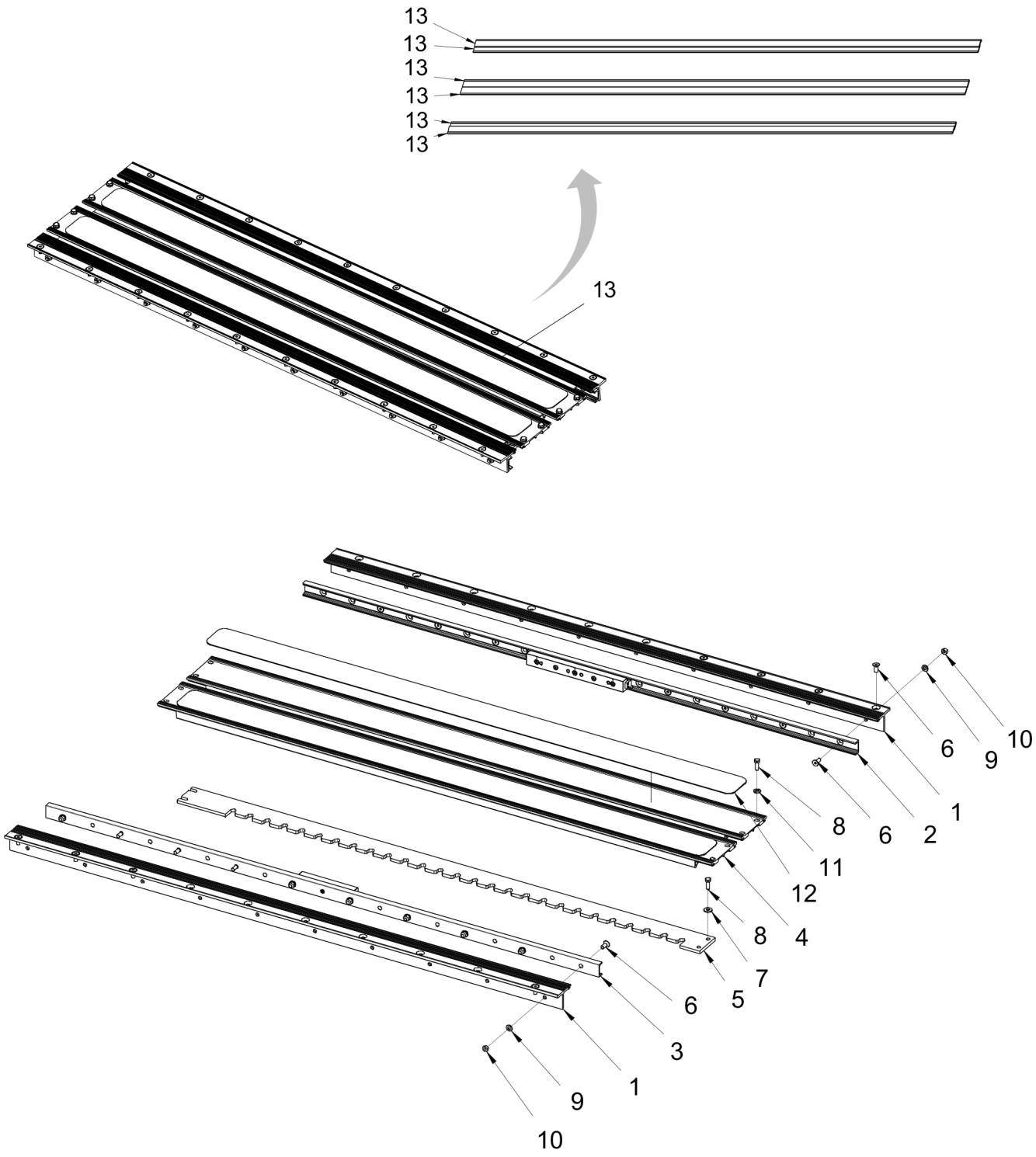

Item	Part No.	Name	Qty	L	SN INFO
1	4812122835	Holder	2		
2	4812122841	Linear bearing	1		
3	4812122840	Linear bearing	1		
4	4812122844	Cover	2		
5	4812122847	Locking rail	1		
6	4700513003	Screw	40		
7	4700791304	Steel plain washer	4		
8	4700500021	Screw, M8x25 mm 8.8 A2K	12		
9	4700904229	Washer, 8.4x 6x1.5 mm 300HV	20		
10	4700570005	Hexagon nut	20		
11	4700904556	Steel plain washer 8,4x16x3,0	8		
12	4812123722	Slip protection	2		
13	4812120557	Sealing brush	6XL	A	

Comments for Page: Floor cassette module

(L)OCAL REMARKS

A | L = 1540 mm (Total L = 9240 mm)

Operator platform Seat, galon suspensioned

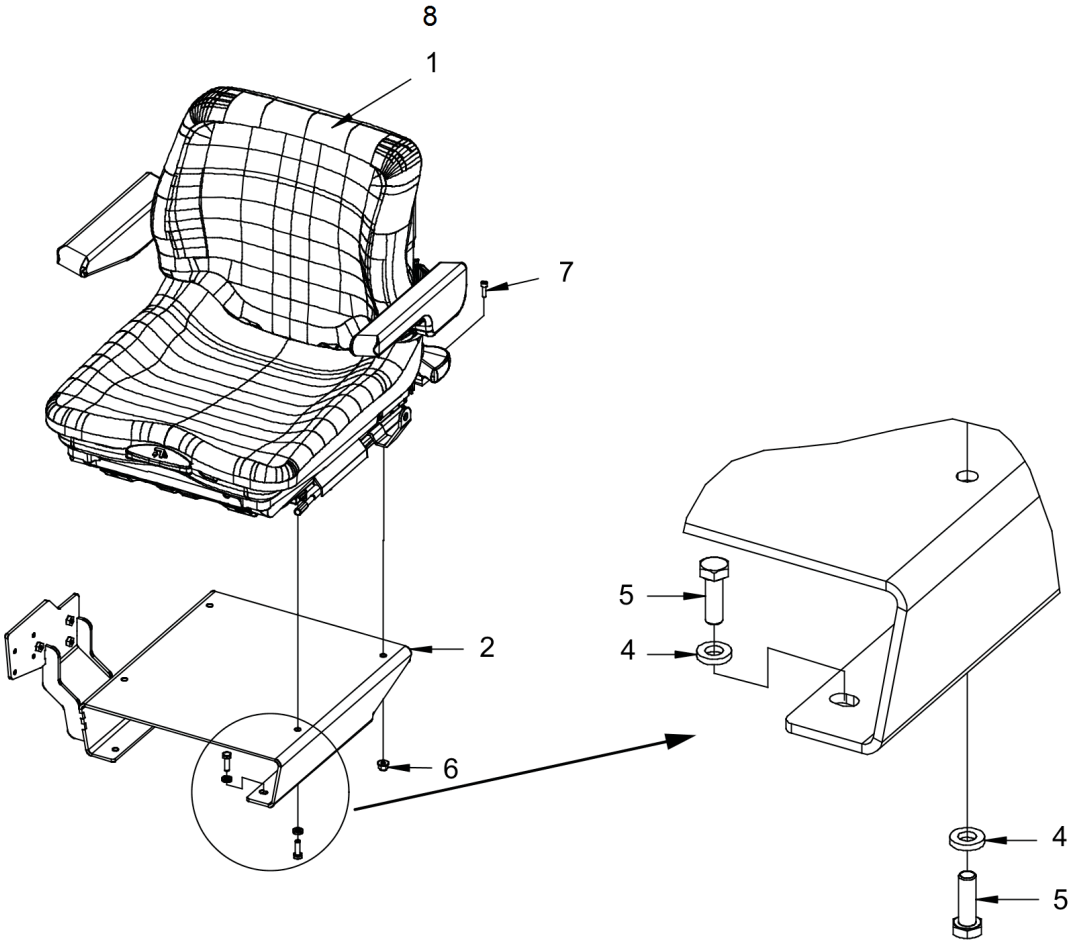

Item	Part No.	Name	Qty	L	SN INFO
1	4700370234	Seat, galon suspensioned	1		
-	4700909535	Sliding rail with handle	1		
-	4700909536	Sliding rail	1		
-	4700936283	Seat switch	1		
-	4700372696	Arm rest, left	1		
-	4700372697	Arm rest, right	1		
2	4812123724	Seat console	1		
4	4700904556	Steel plain washer 8,4x16x3,0	6		
5	4700500021	Screw, M8x25 mm 8.8 A2K	6		
6	4700902286	Lock nut, M8x1.25 mm A2K	2		
7	4700508025	Screw, M6x20 mm 8.8 A2K	2		
8	4700386075	Seat protection	1		

Operator platform Seat comfort, fabric suspensioned

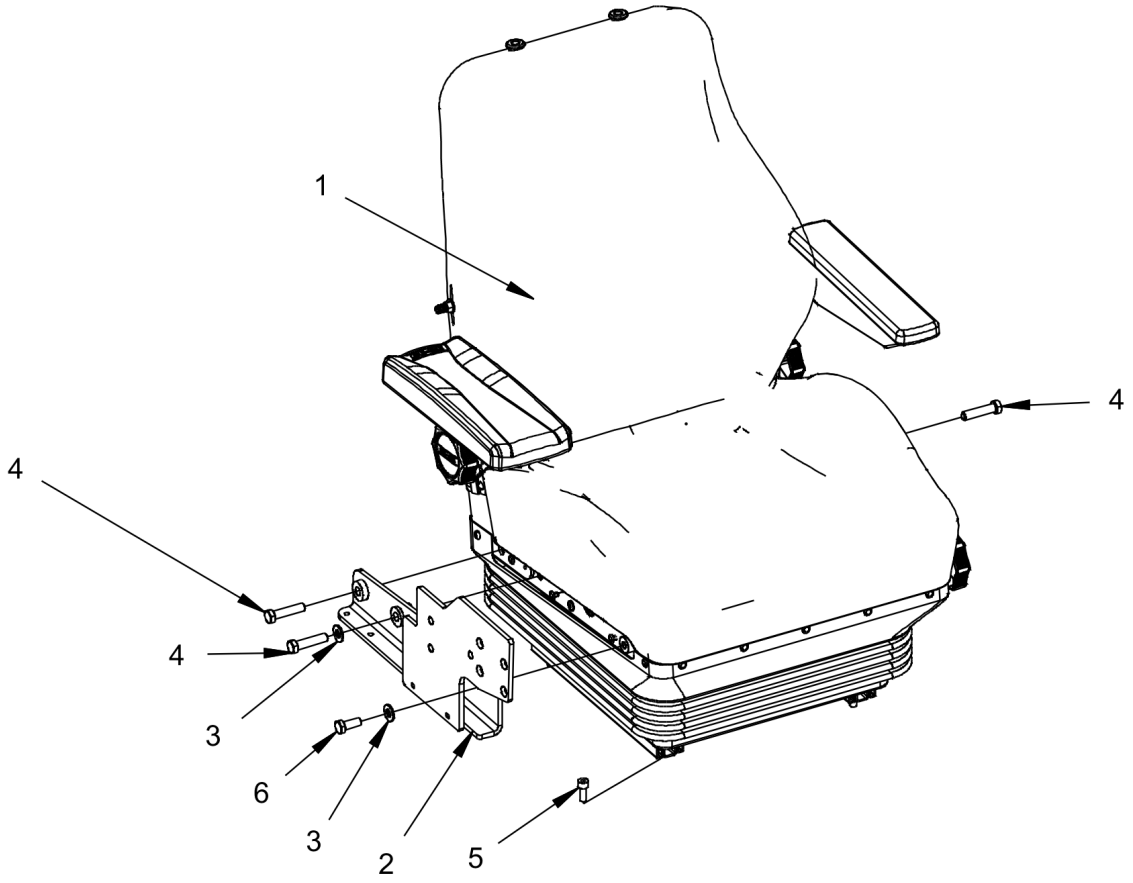

Item	Part No.	Name	Qty	L	SN INFO
1	4812116357	Seat, fabric suspensioned	1	A	
-	4700937892	Seat switch	1		
-	4700937620	Arm rest, right	1		
-	4812158367	Arm rest wide, right	1		
-	4700937621	Arm rest, left	1		
2	4812124339	Control bracket	1		
3	4700904230	Steel plain washer	2		
4	4700792527	Screw	3		
5	4700508092	Screw	4		
6	4700500028	Hex Head screw	1		

Comments for Page: Seat comfort, fabric suspensioned

(L)OCAL REMARKS

A | en_US | Without seat belt.

Operator platform Seat comfort, galon suspensioned

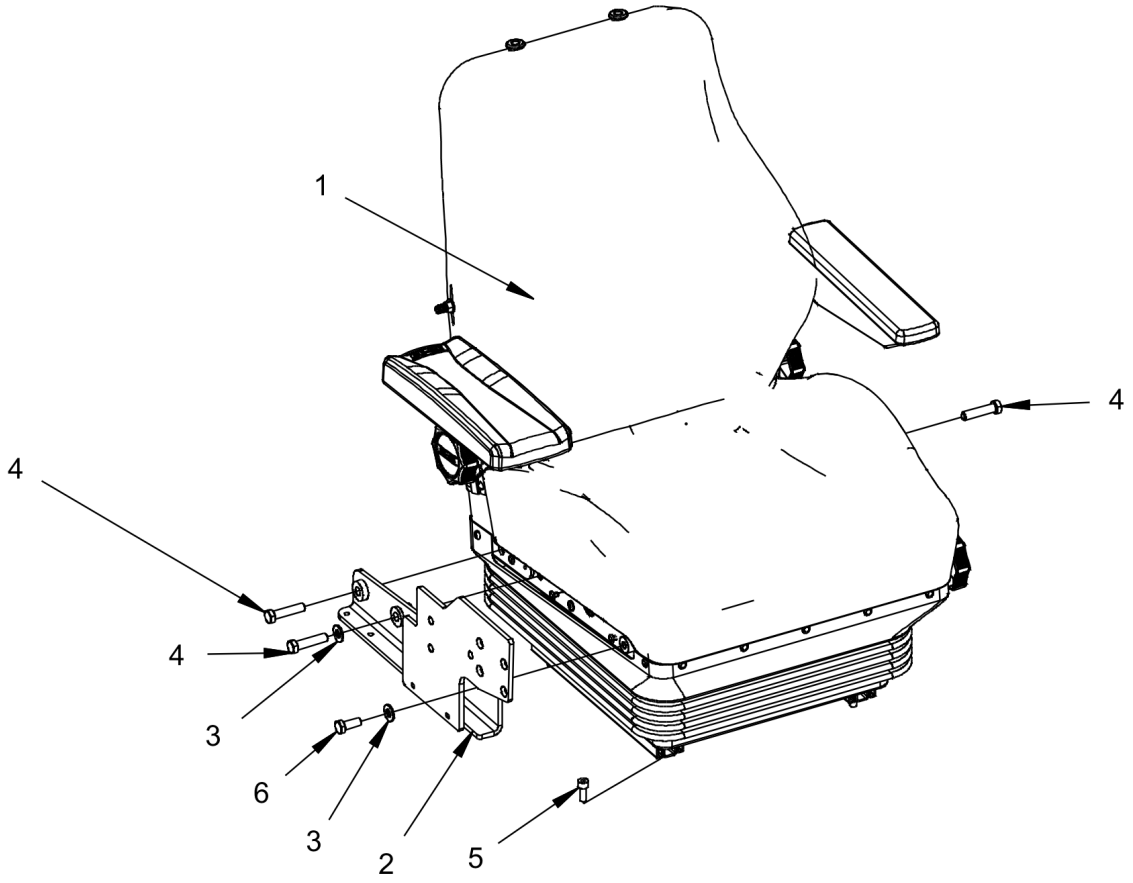

Item	Part No.	Name	Qty	L	SN INFO
1	4812125361	Seat, galon suspensioned	1	A	
-	4700937892	Seat switch	1		
-	4700937620	Arm rest, right	1		
-	4812158367	Arm rest wide, right	1		
-	4700937621	Arm rest, left	1		
2	4812124339	Control bracket	1		
3	4700904230	Steel plain washer	2		
4	4700792527	Screw	3		
5	4700508092	Screw	4		
6	4700500028	Hex Head screw	1		

Comments for Page: Seat comfort, galon suspensioned

(L)OCAL REMARKS

A | en_US | Without seat belt.

Seat belts Seat belt 2"

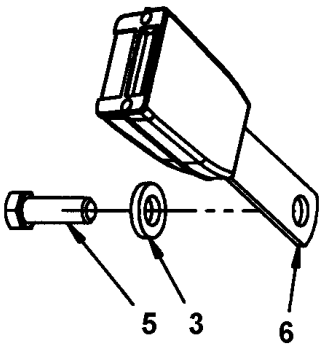

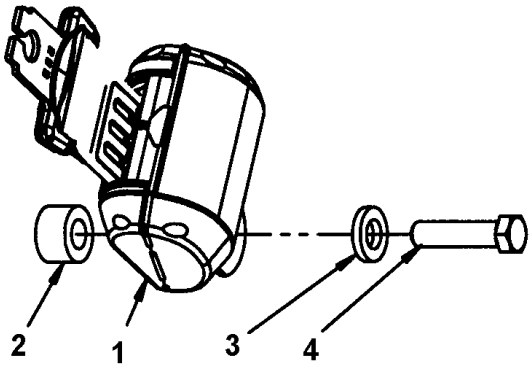

Item	Part No.	Name	Qty	L	SN INFO
1	4812117922	Seat belt 2"	1		
2	4700791572	Spacer washer	1		
3	4700904703	Plain washer 13x24x4 mm	4		
4	4700792527	Screw	1	A	
5	4700928347	Hexagon screw	2	A	
6	4812117924	Buckle	1		

Comments for Page: Seat belt 2"

(L)OCAL REMARKS

A | en_US | Used with seat 4700377518.

Seat belts Seat belt 2" with reminder

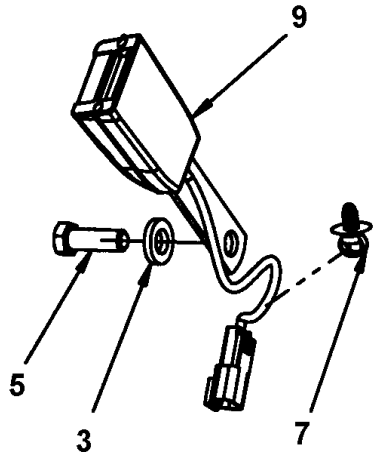

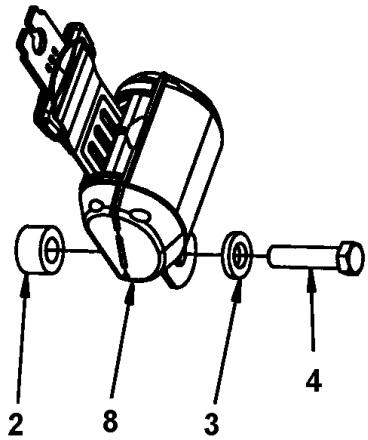

Item	Part No.	Name	Qty	L	SN INFO
2	4700791572	Spacer washer	1		
3	4700904703	Plain washer 13x24x4 mm	4		
4	4700792527	Screw	1		
5	4700928347	Hexagon screw	2		
7	4700792441	Cable tie with holder	1		
8	4812117922	Seat belt 2"	1		
9	4812117925	Buckle with reminder	1		

Seat belts Seat belt 3"

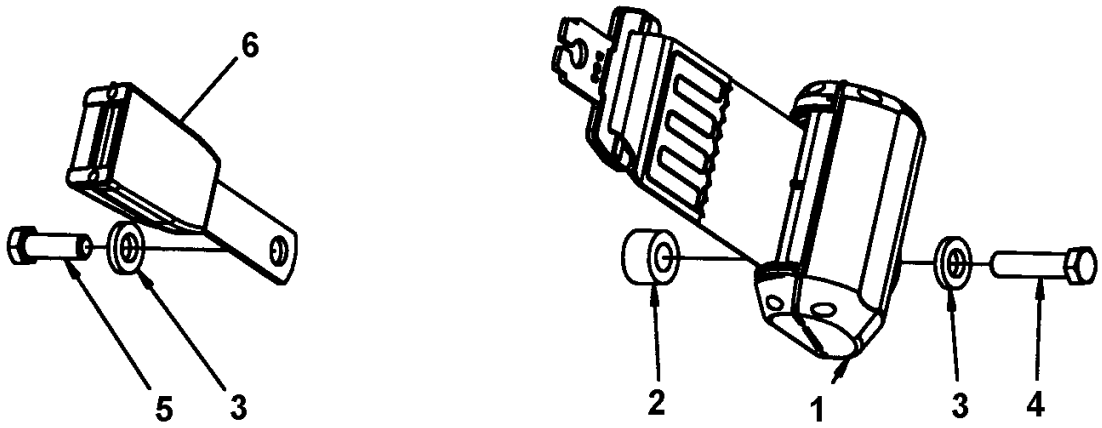

Item	Part No.	Name	Qty	L	SN INFO
1	4812118816	Seat belt 3"	1		
2	4700791572	Spacer washer	1		
3	4700904703	Plain washer 13x24x4 mm	4		
4	4700792527	Screw	1		
5	4700928347	Hexagon screw	2		
6	4812117924	Buckle	1		

Seat belts Seat belt 3" with reminder

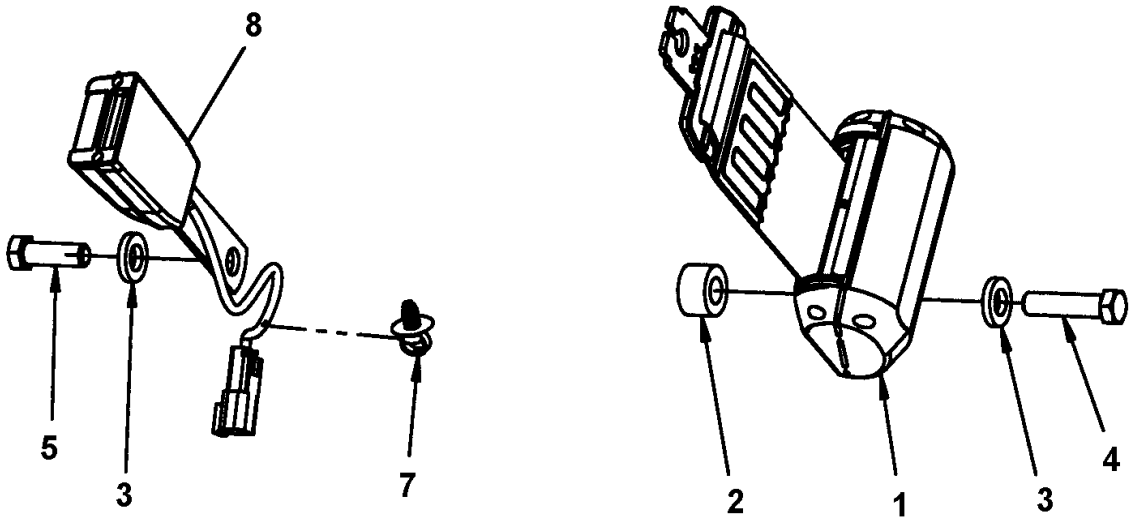

Item	Part No.	Name	Qty	L	SN INFO
1	4812118816	Seat belt 3"	1		
2	4700791572	Spacer washer	1		
3	4700904703	Plain washer 13x24x4 mm	4		
4	4700792527	Screw	1		
5	4700928347	Hexagon screw	2		
7	4700792441	Cable tie with holder	1		
8	4812117925	Buckle with reminder	1		

Operator platform Control module, 6 buttons

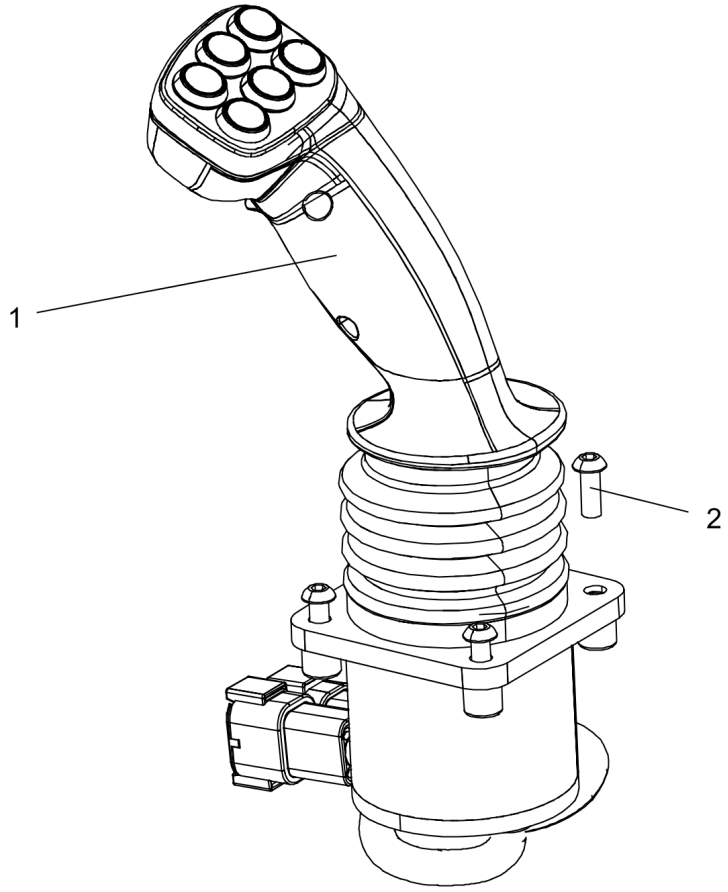

Item	Part No.	Name	Qty	L	SN INFO
1	4812126249	F&R lever	1		
2	4700904206	Screw, M6x16 mm	4		

Operator platform Forward-reverse control module

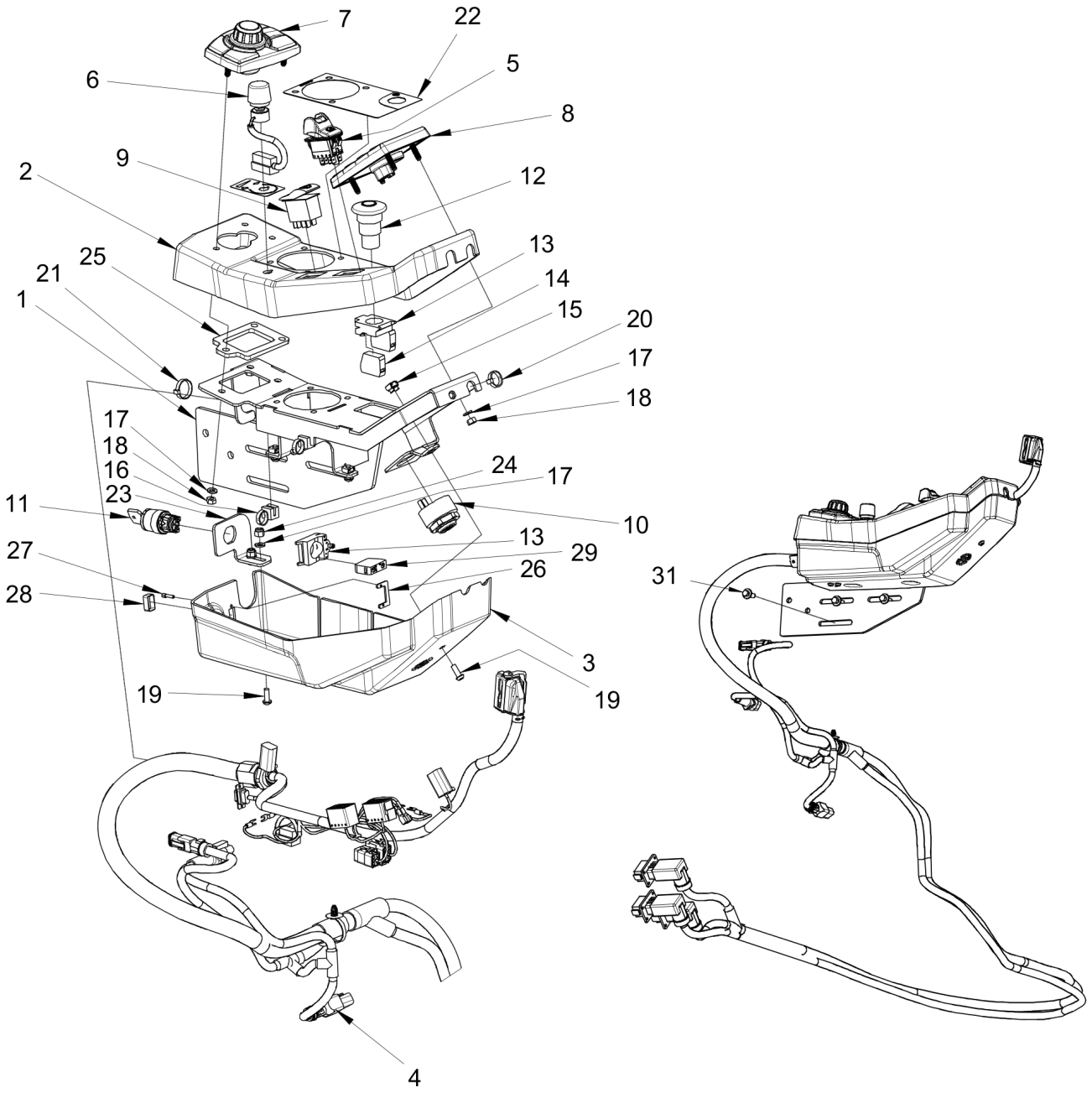

Item	Part No.	Name	Qty	L	SN INFO
1	4812122848	Bracket	1		
2	4812122849	Cover	1		
3	4812122850	Cover	1		
4	4812123183	Cable harness	1		
5	4812118697	Switch, parking brake	1		
6	4700388737	Potentiometer	1		
7	4812124138	Display control	1		
8	4812124137	Keypad	1		
9	4812115810	Switch, displacement shift	1		
10	4700385599	Buzzer	1		
11	4812315341	Key switch	1		
11	4700902866	Key Marked "455"			
12	4700791739	Emergency stop	1		
13	4700791733	Fixing collar	2		
14	4700791723	Connector	2		
15	4812110586	Cage nut	3		
16	4700792667	Cable tie holder	2		
17	4700904228	Washer 6,4x12x1,5	9		
18	4700570004	Hexagon nut M6	7		
19	4700904206	Screw, M6x16 mm	5		
20	4700313041	Cable ties	0		
21	4700313041	Cable ties	1		
22	4812126238	Decal information	1		
23	4812125885	Bracket	1		
24	4700586002	Lock nut M6 -8	2		
25	4812126257	Bracket	1		
26	4812119317	Holder	1		
27	4812114213	Lock screw	2		
28	4812114214	Cover	1		
29	4700791736	Connector N/O	1		
31	4700500505	Screw, M8x20 mm 8.8 A2K	3		

Operator platform Display module

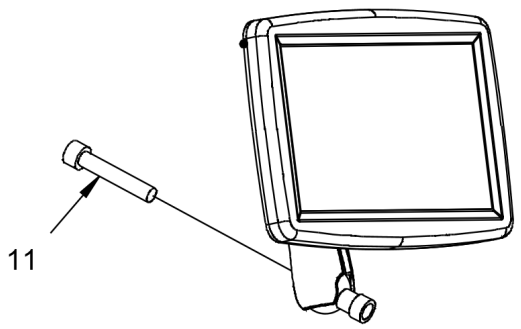

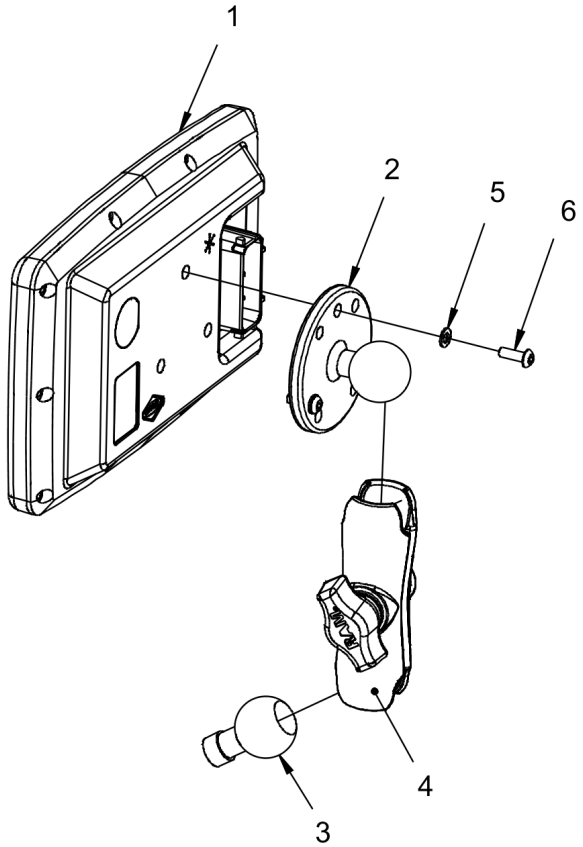

Item	Part No.	Name	Qty	L	SN INFO
1	4812124136	Display unit	1		
2	4812122978	Ball joint	1		
3	4812122979	Ball joint	1		
4	4812122980	Arm	1		
5	4700904698	Plain washer	3		
6	4700904289	Screw	3		
11	4700508057	Screw	1		

Operator platform Instrument panel cover module

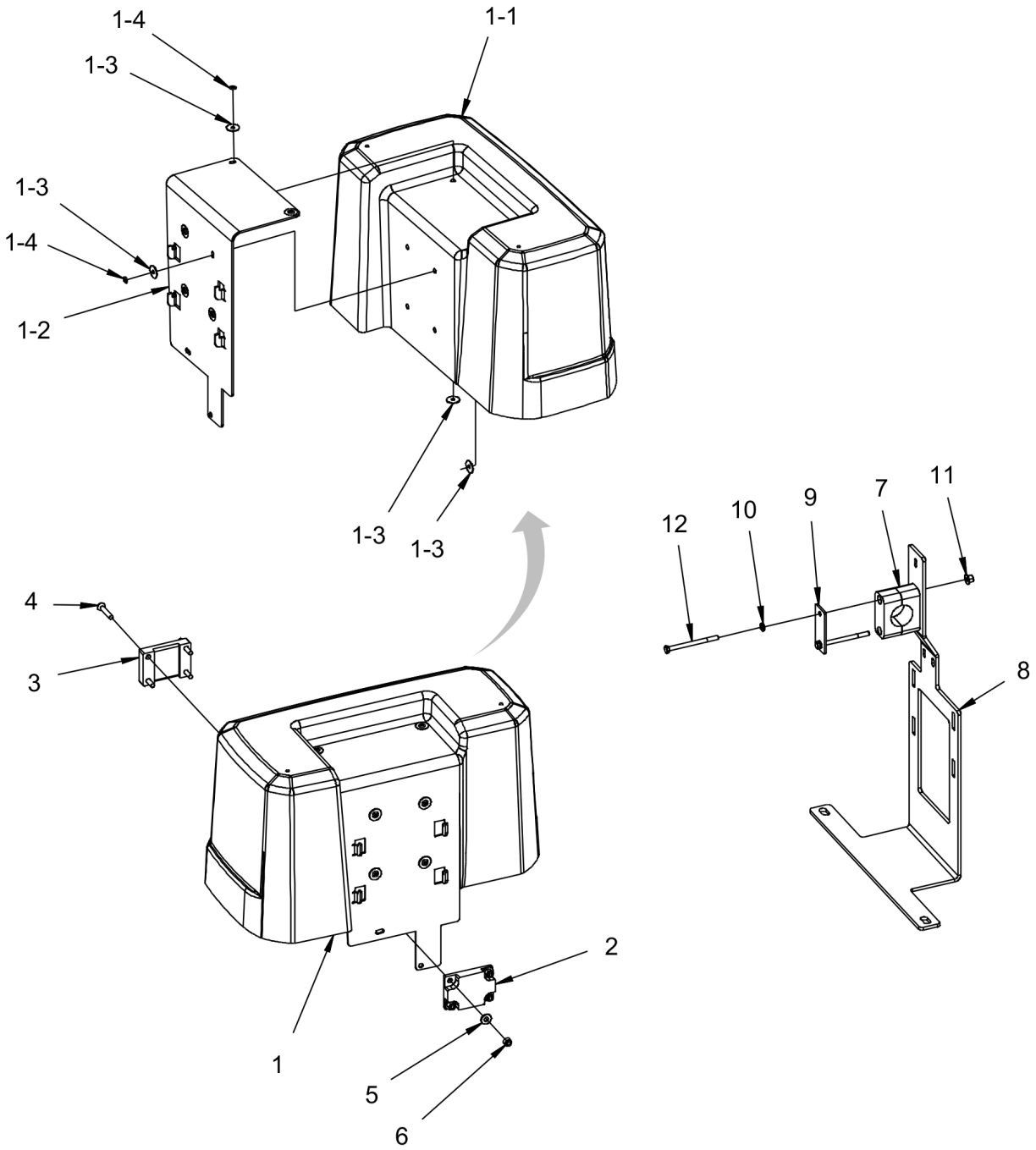

Item	Part No.	Name	Qty	L	SN INFO
1		Instrument panel cover assembly	1		
1-1	4812126204	Instrument panel cover	1		
1-2	4812126203	Bracket	1		
1-3	4700927974	Washer, 5x19x1 mm	12		
1-4	4700904619	Blind rivet	6		
2	4812126201	Bracket, front	1		
3	4812126202	Bracket, back	1		
4	4700924875	Screw	4		
5	4700923648	Washer	4		
6	4700586002	Lock nut M6 -8	4		
7	4700904340	Pipe clamp	1		
8	4812126205	Bracket	1		
9	4700924791	Cover plate	1		
10	4700904228	Washer 6,4x12x1,5	2		
11	4700902285	Nut	2		
12	4700500153	Screw	2		

Accessories and decals SMV sign

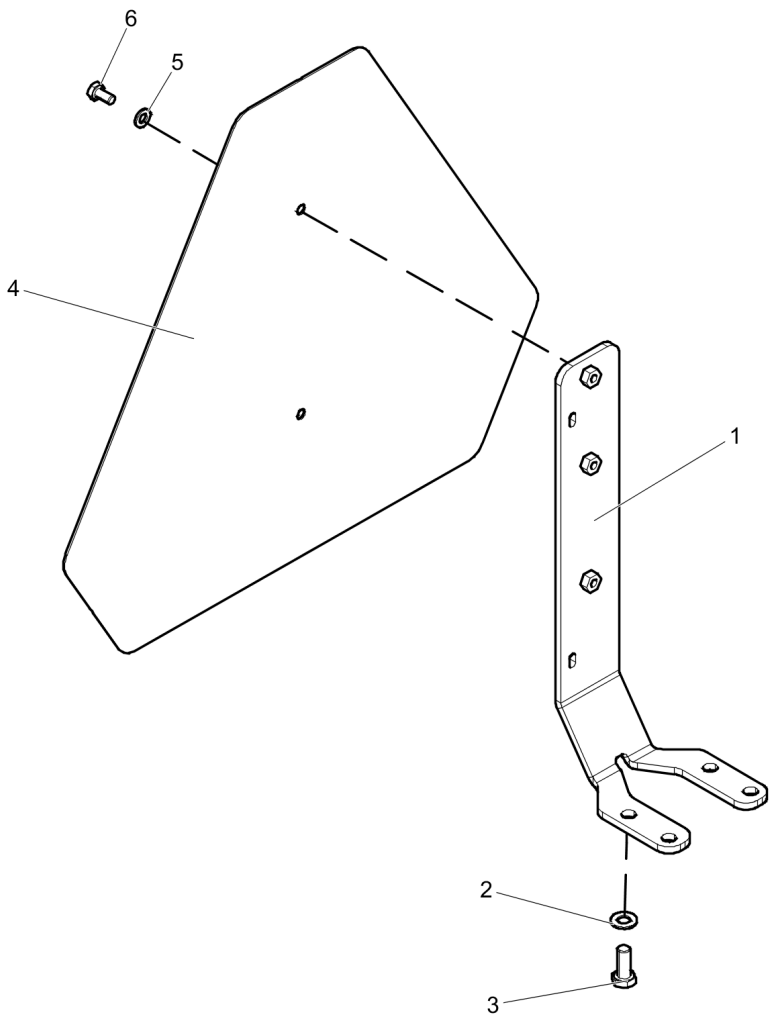

Item	Part No.	Name	Qty	L	SN INFO
1	4812124444	Holder	1		
2	4700904229	Washer, 8.4x 6x1.5 mm 300HV	4		
3	4700500053	Screw, M8x20 mm 8.8 A2K	4		
4	4700476019	SMV-sign	1		
5	4700904228	Washer 6,4x12x1,5	2		
6	4700500012	Hex. screw	2		

Accessories and decals Fire extinguisher

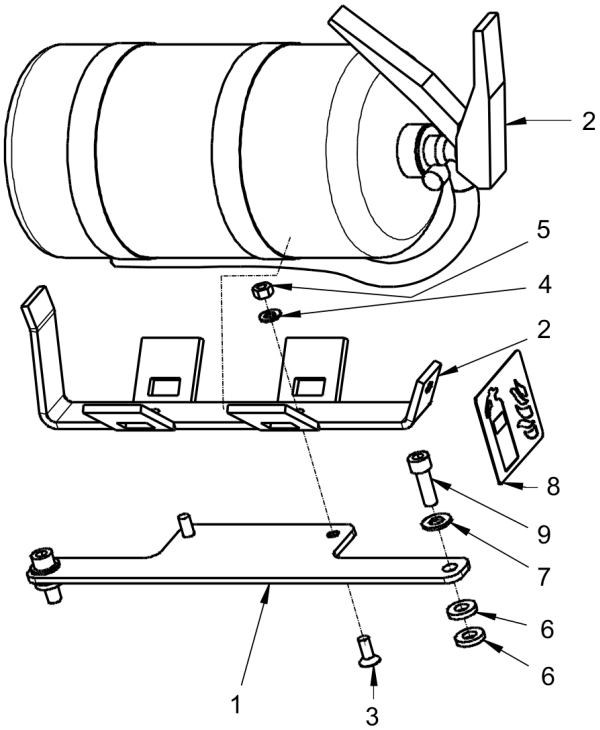

Item	Part No.	Name	Qty	L	SN INFO
1	4812126421	Bracket	1		
2		Fire extinguisher	1		
3	4700513003	Screw	2		
4	4700904229	Washer, 8.4x 6x1.5 mm 300HV	2		
5	4700570005	Hexagon nut	2		
6	4700904557	Washer, 10.5x22x4 mm 300 HV	4	1	
7	4700904230	Steel plain washer	2		
8	4700792634	Decal fire extinguisher	1		
9	4700508029	Cylinder screw	2	1	

Comments for Page: Fire extinguisher

(L)OCAL REMARKS

1 | Part numbers used for CC5200/CC6200, existing screw from wiper motor cover is used on CC4000/CC4200.

Accessories and decals Plain Dynapac decals, kit

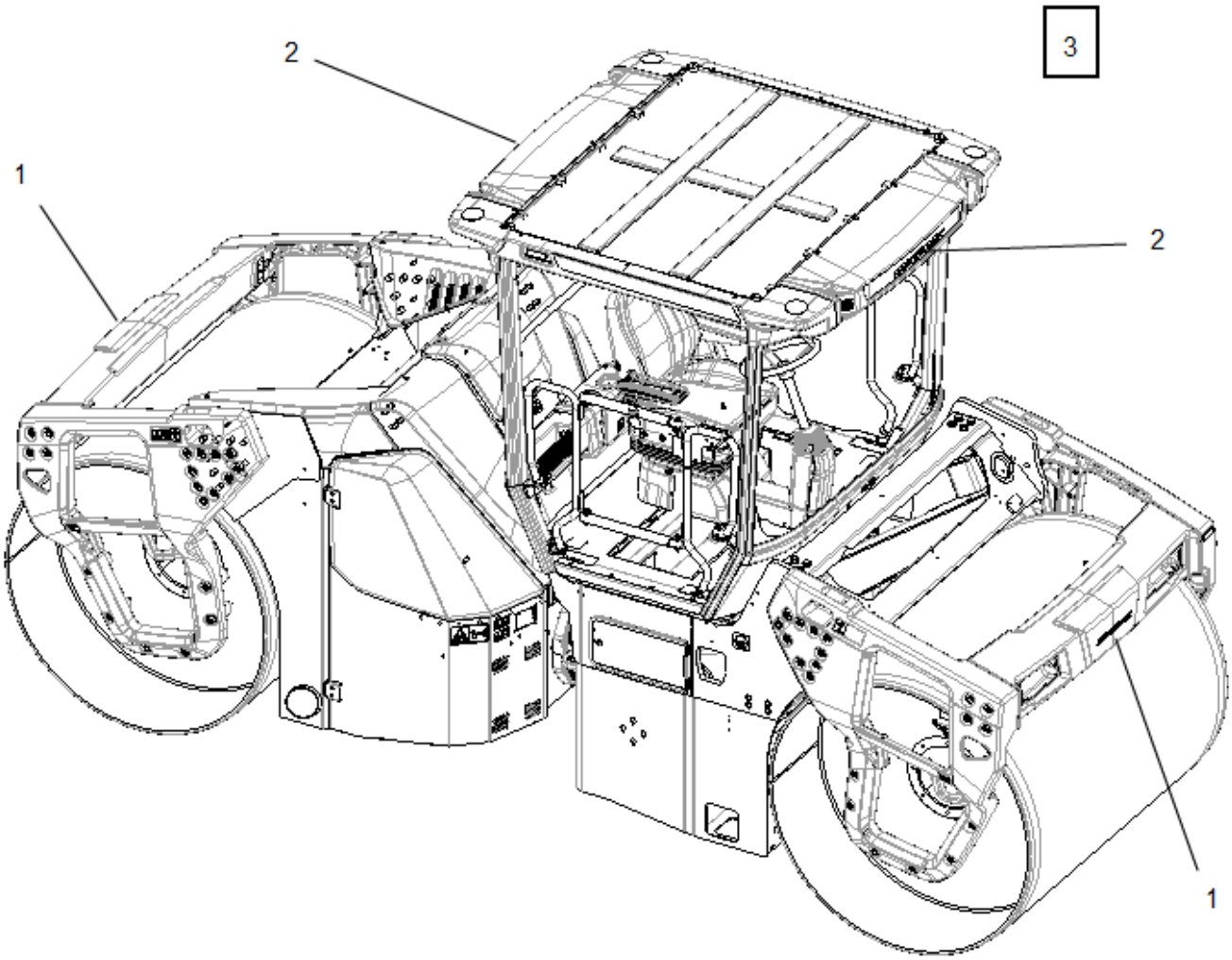

Item	Part No.	Name	Qty	L	SN INFO
0	4812127929	Plain Dynapac decals, kit	1		
1	4812127819	Decal "DYNAPAC", black 290	2		
2	4812127820	Decal "DYNAPAC", black 420	2		
3		Drawing for instruction			

Accessories and decals Color Dynapac

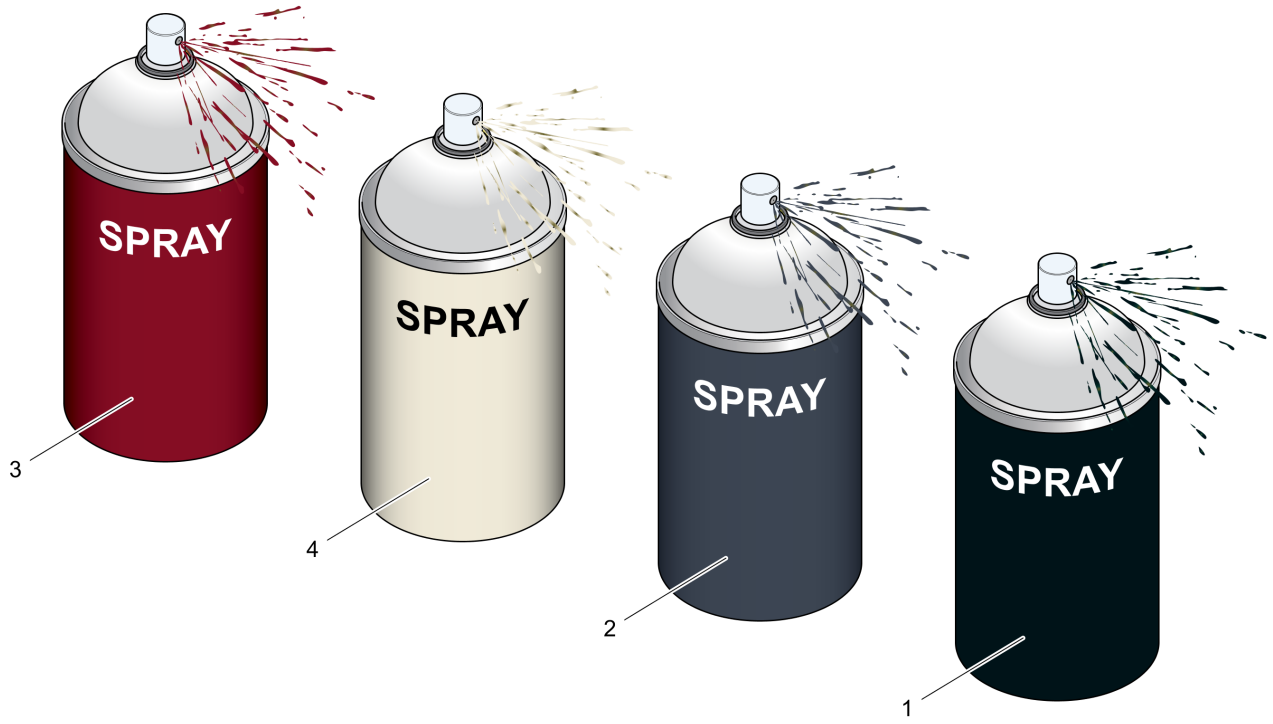

Item	Part No.	Name	Qty	L	SN INFO
1	4812215510	Dynapac color, black	1		
2	4812215511	Dynapac color, grey	1		
3	4812215512	Dynapac color, red	1		
4	4812215516	Dynapac color, white	1		
5	4812007588	Color AC grey	1		
6	4812007591	Color AC yellow	1		

SPRAY
6
SPRAY
5

This page intentionally left blank

Air conditoning Air conditioning

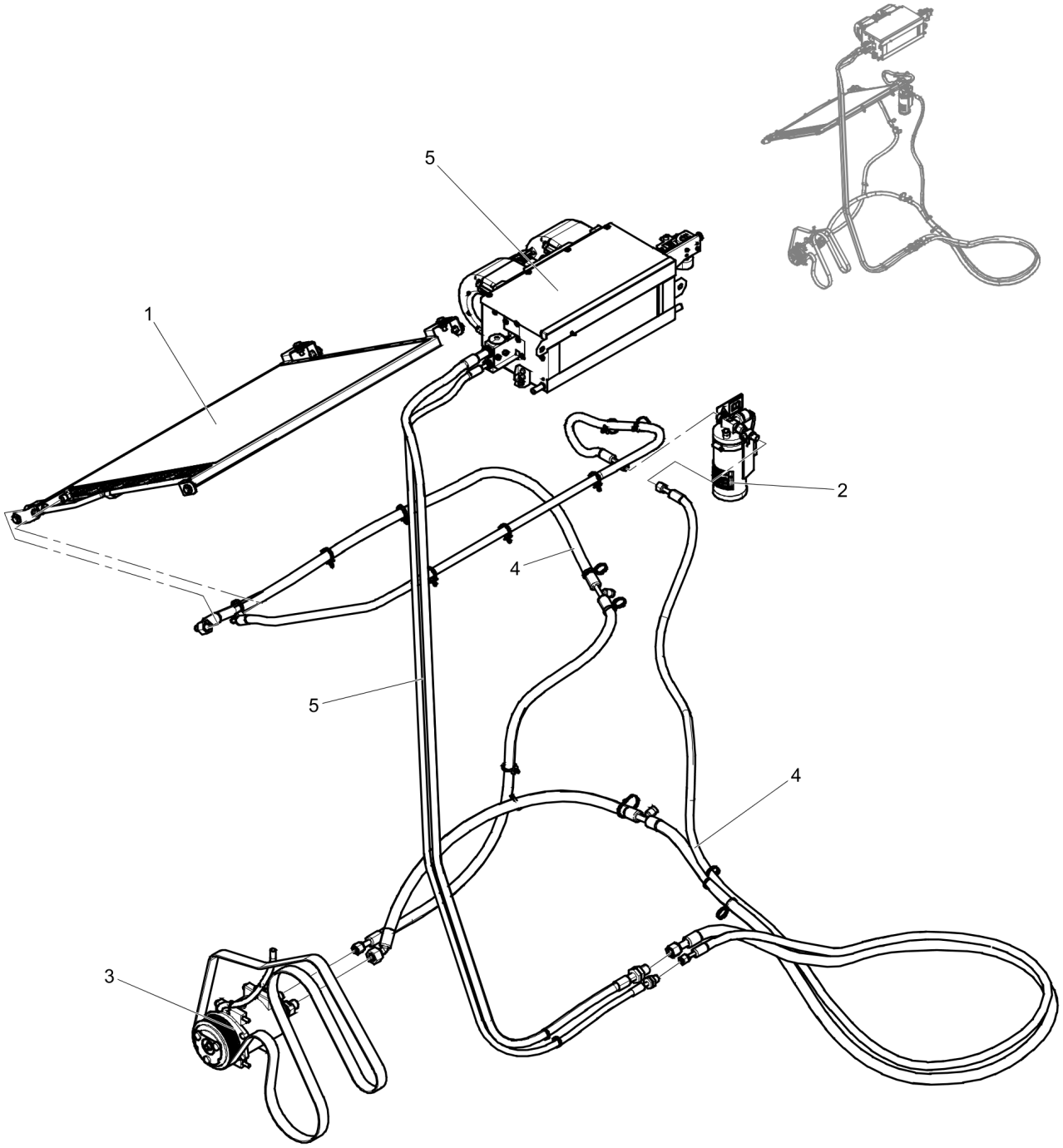

Item	Part No.	Name	Qty	L	SN INFO
1		Condensor module	1		
2		Drying filter module	1		
3		Compressor module	1		
4		Refrigerant hose kit	1		
5	-	Air condition installation, cab	1		

Air conditoning Condensor module

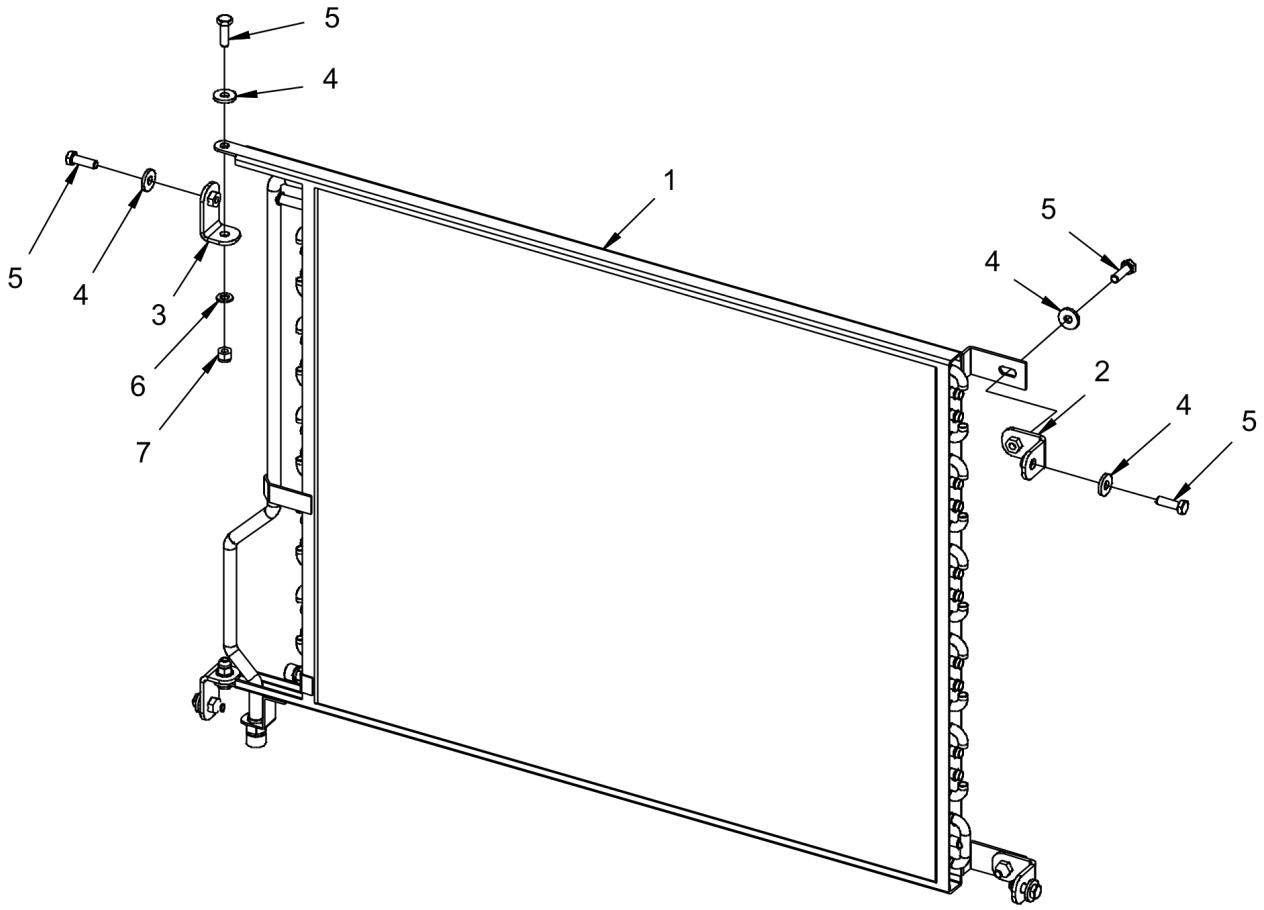

Item	Part No.	Name	Qty	L	SN INFO
1	4812113032	Condensor	1		
2	4812126134	Bracket	2		
3	4812123329	Bracket	2		
4	4700904640	Washer, 8.4x22x3 mm 300HV	8		
5	4700500021	Screw, M8x25 mm 8.8 A2K	8		
6	4700904229	Washer, 8.4x 6x1.5 mm 300HV	2		
7	4700586003	Lock nut M8	2		

Air conditoning Drying filter module

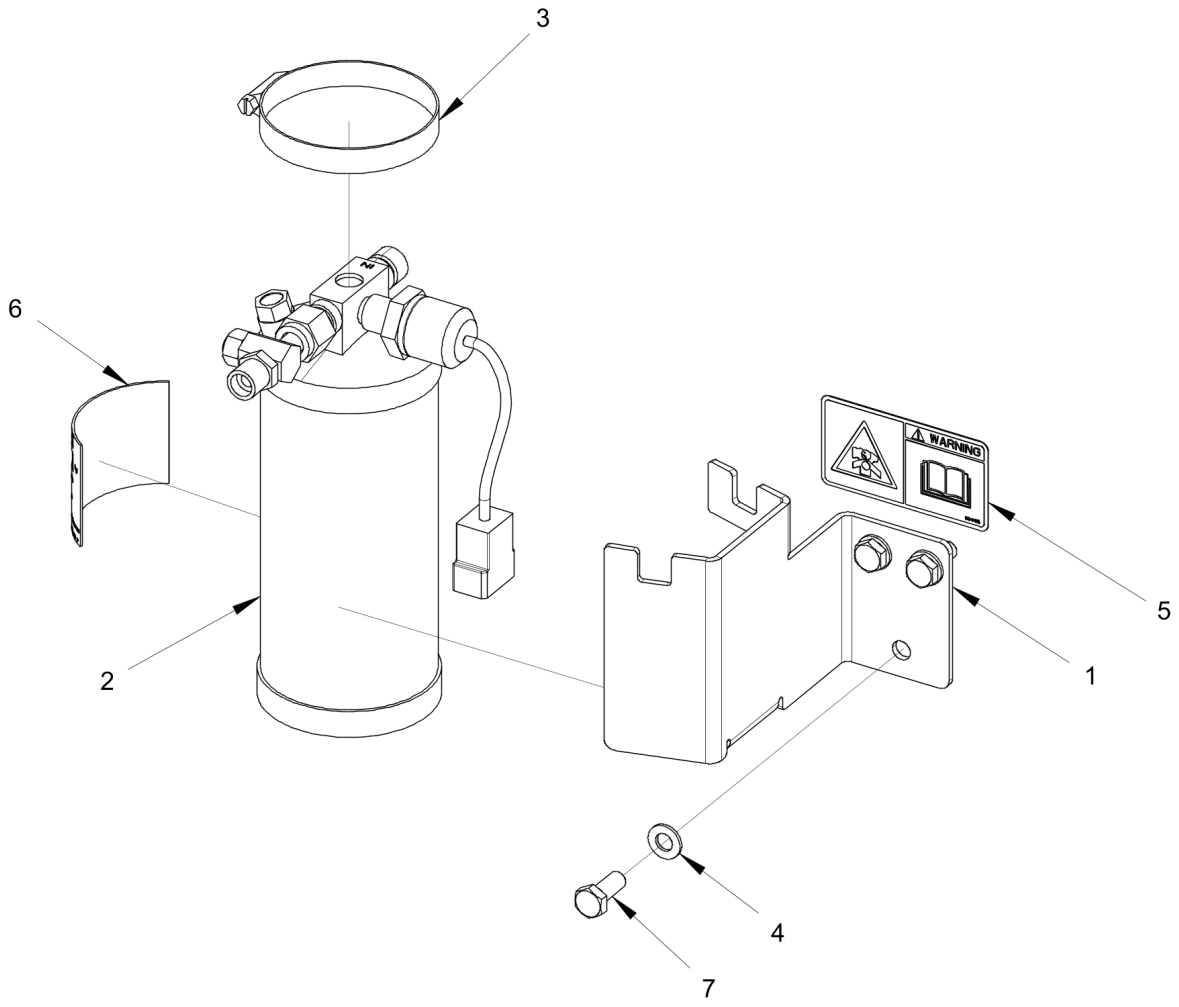

Item	Part No.	Name	Qty	L	SN INFO
1	4812123330	Bracket	1		
2	4812114257	Drying filter assy	1		
3	4700313022	Hose clamp	1		
4	4700904229	Washer, 8.4x 6x1.5 mm 300HV	3		
5	4700904165	Safety decal "Toxic gases"	1		
6	4812121417	Decal, Flourinated gas	1		
7	4700500053	Screw, M8x20 mm 8.8 A2K	3		

Air conditoning 4812114257 Drying filter assy

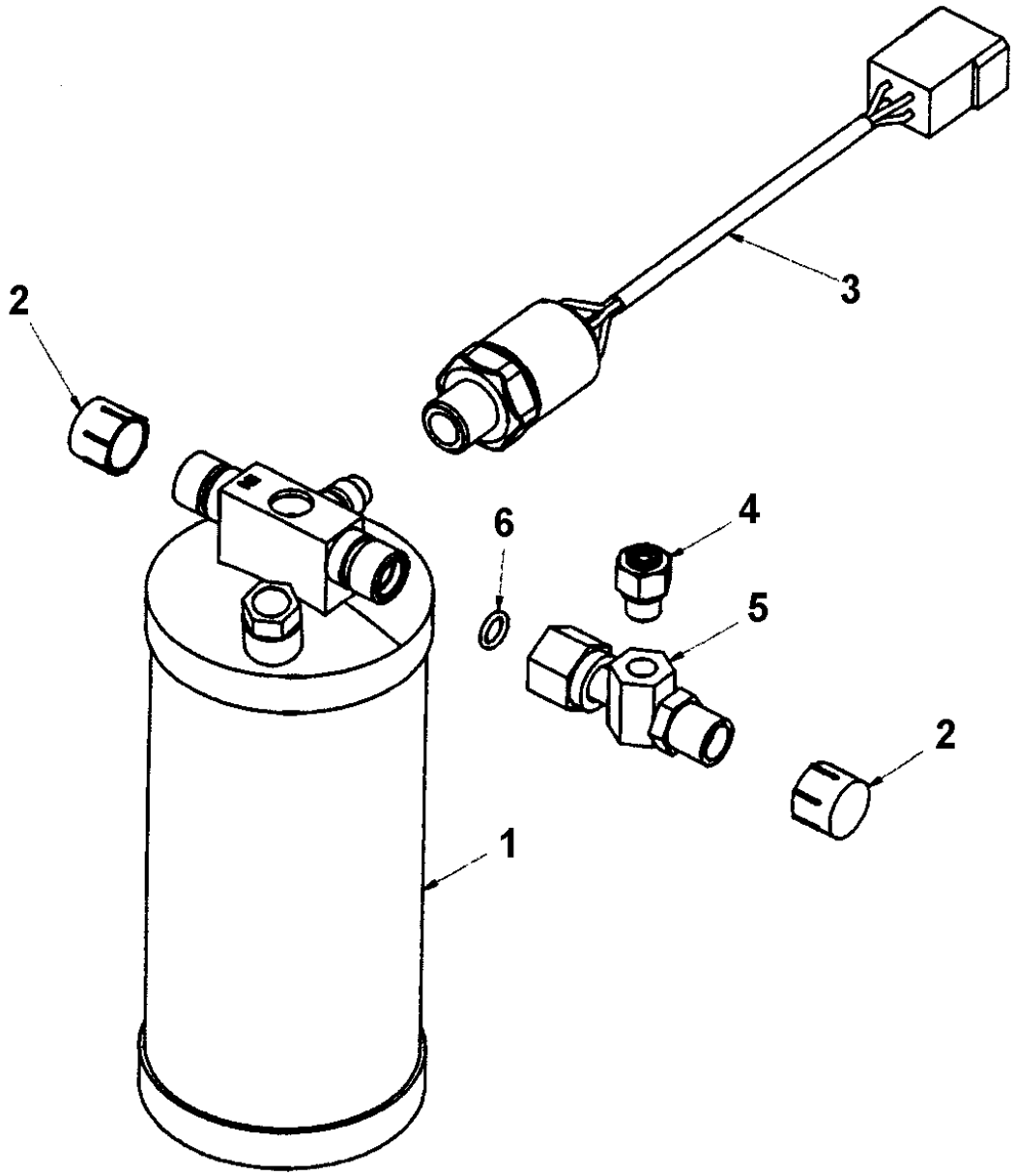

Item	Part No.	Name	Qty	L	SN INFO
1	4812113083	Drying filter	1		
2	-	Plastic cap	2		
3	4812113245	Pressure switch	1		
4	4812114245	Pressure relief valve	1		
5	4812114246	Adapter	1		
6	-	O-ring	1		

Air conditoning Compressor module

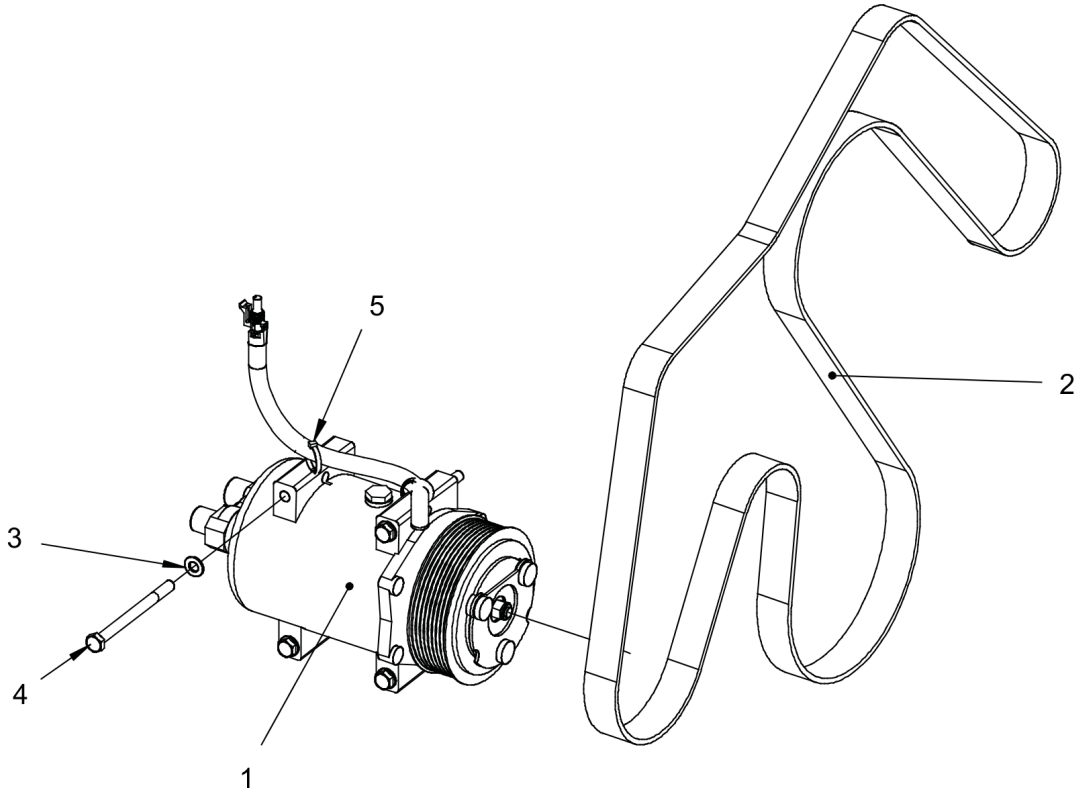

Item	Part No.	Name	Qty	L	SN INFO
1	4812121926	Compressor	1		
1	4700396035	Hose connection	1		
2	4812122380	Belt	1		
3	4700904229	Washer, 8.4x 6x1.5 mm 300HV	4		
4	4700500096	Screw	4		
5	4700925802	Cable ties L=142 mm	N		

Air conditoning Refrigerant hose kit

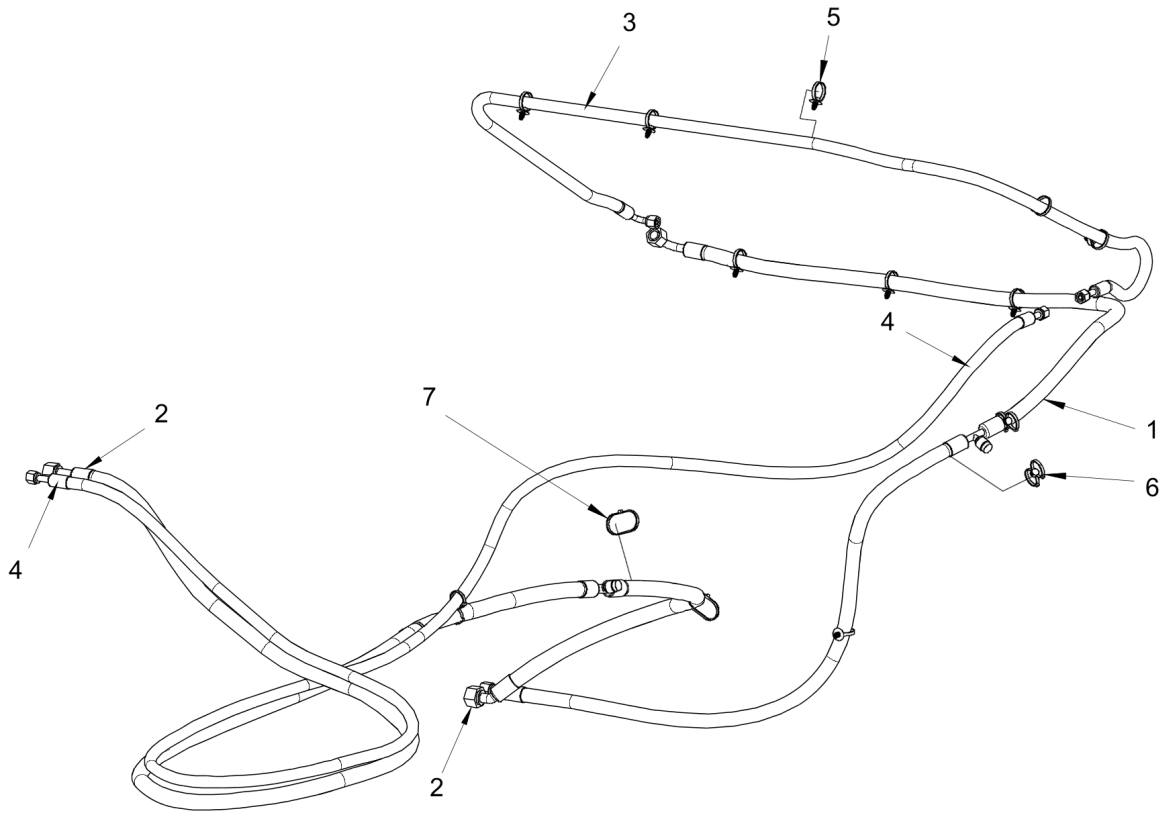

Item	Part No.	Name	Qty	L	SN INFO
1	4812125374	Refrigerant hose	1		
2	4812125375	Refrigerant hose	1		
3	4812125376	Refrigerant hose	1		
4	4812125377	Refrigerant hose	1		
5	4700792441	Cable tie with holder	10		
6	4700792686	Cable tie with holder	4		
7	4700313041	Cable ties	N		

Options Car stereo module 12V

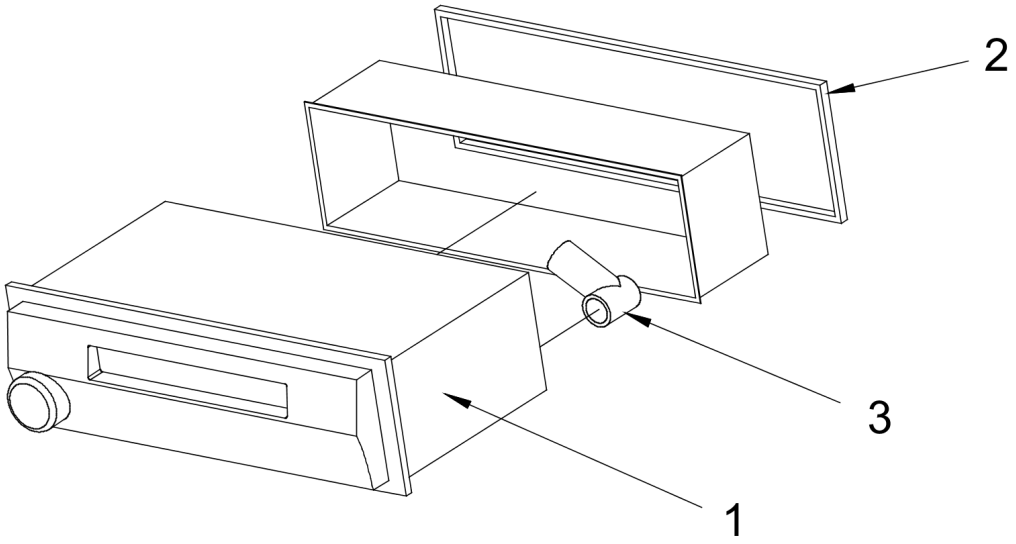

Item	Part No.	Name	Qty	L	SN INFO
1	4811000265	Car stereo	1		
2	4812116986	Spacer frame	1		
3	4812119306	Antenna adapter	1		

Options Asphalt temp meter

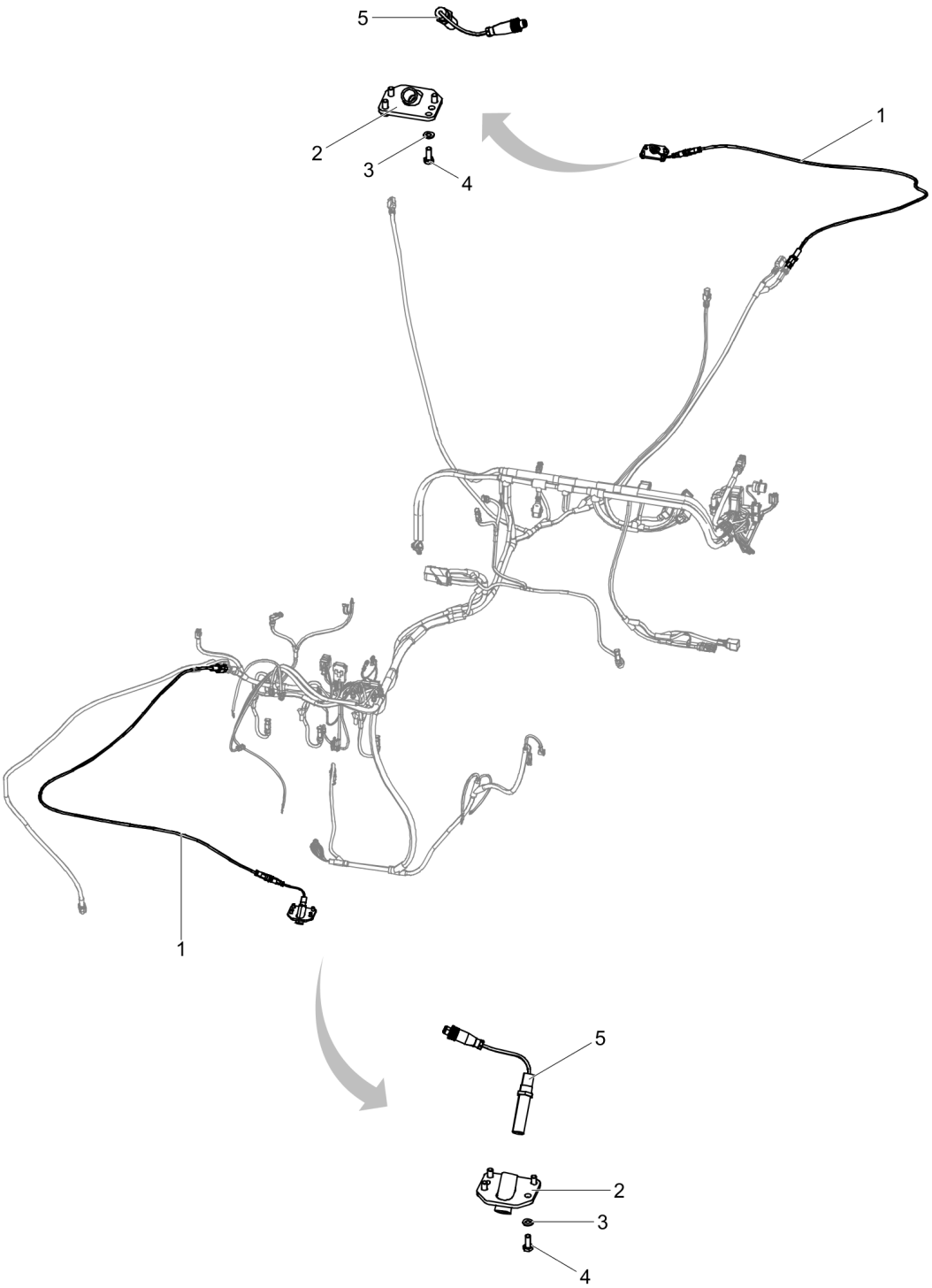

Item	Part No.	Name	Qty	L	SN INFO
1	4812123553	Cable harness	2		
2	4812124442	Holder	2		
3	4700904229	Washer, 8.4x 6x1.5 mm 300HV	8		
4	4700500053	Screw, M8x20 mm 8.8 A2K	8		
5	4812119520	Temperature sensor	2		

Edge cutter Edge cutter, front right

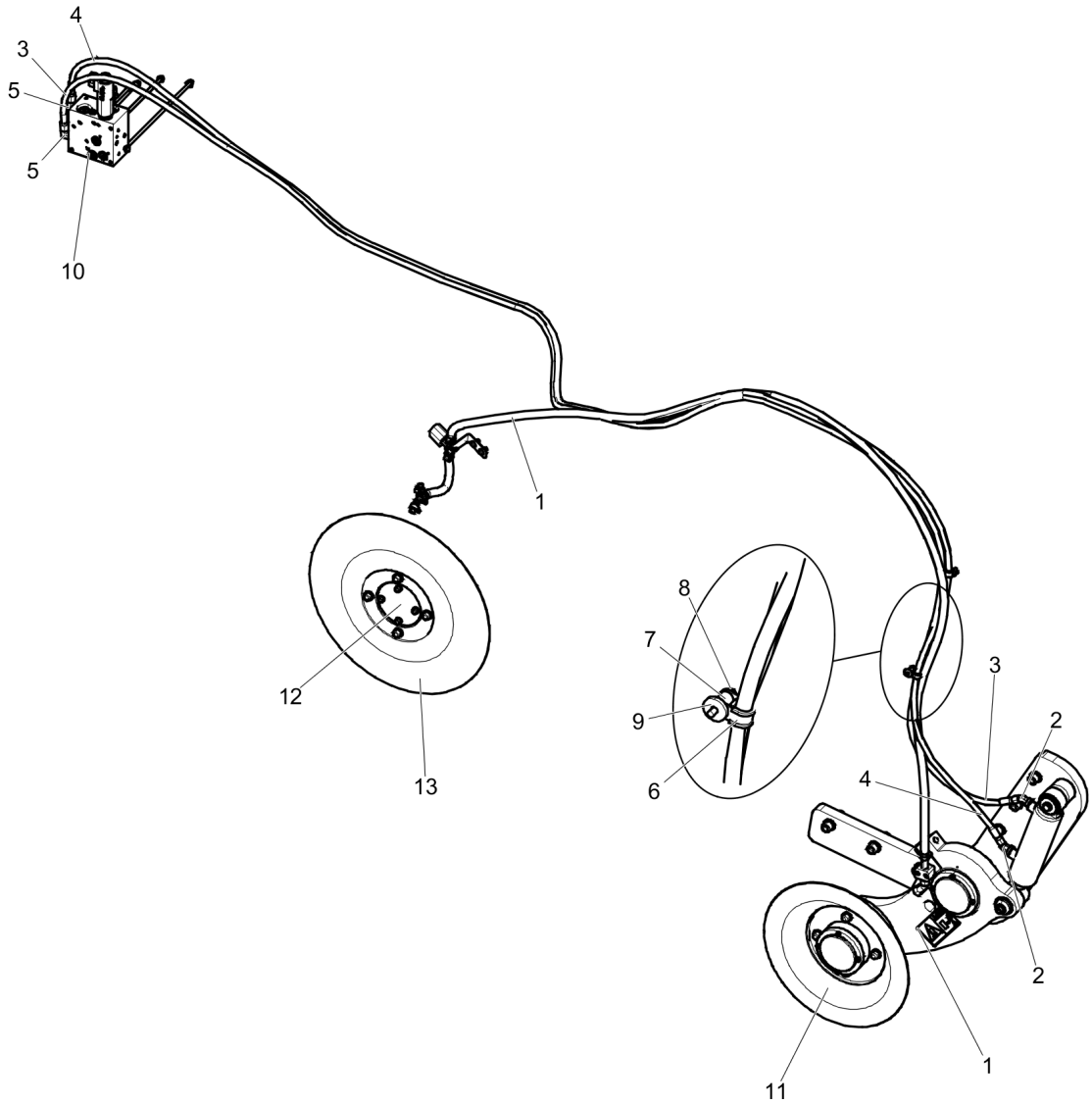

Item	Part No.	Name	Qty	L	SN INFO
1		Edge cutter, right	1		
2	4700792389	Elbow 45 orfs	2		
3	4812124030	Cable harness	1		
4	4812124029	Cable harness	1		
5	4700791846	Adapter	2		
6	4700921046	Clamp	4		
7	4700356273	Spacer sleeve	2		
8	4700500503	Screw, M6x30 mm 8.8 A2K	2		
9	4700904735	Steel plain washer	2		
10		Hydraulic valve module	1		
11	391002	Pressing roller module	1		
12		Holder module	1		
13		Cutting disc module	1		

Edge cutter Edge cutter, right

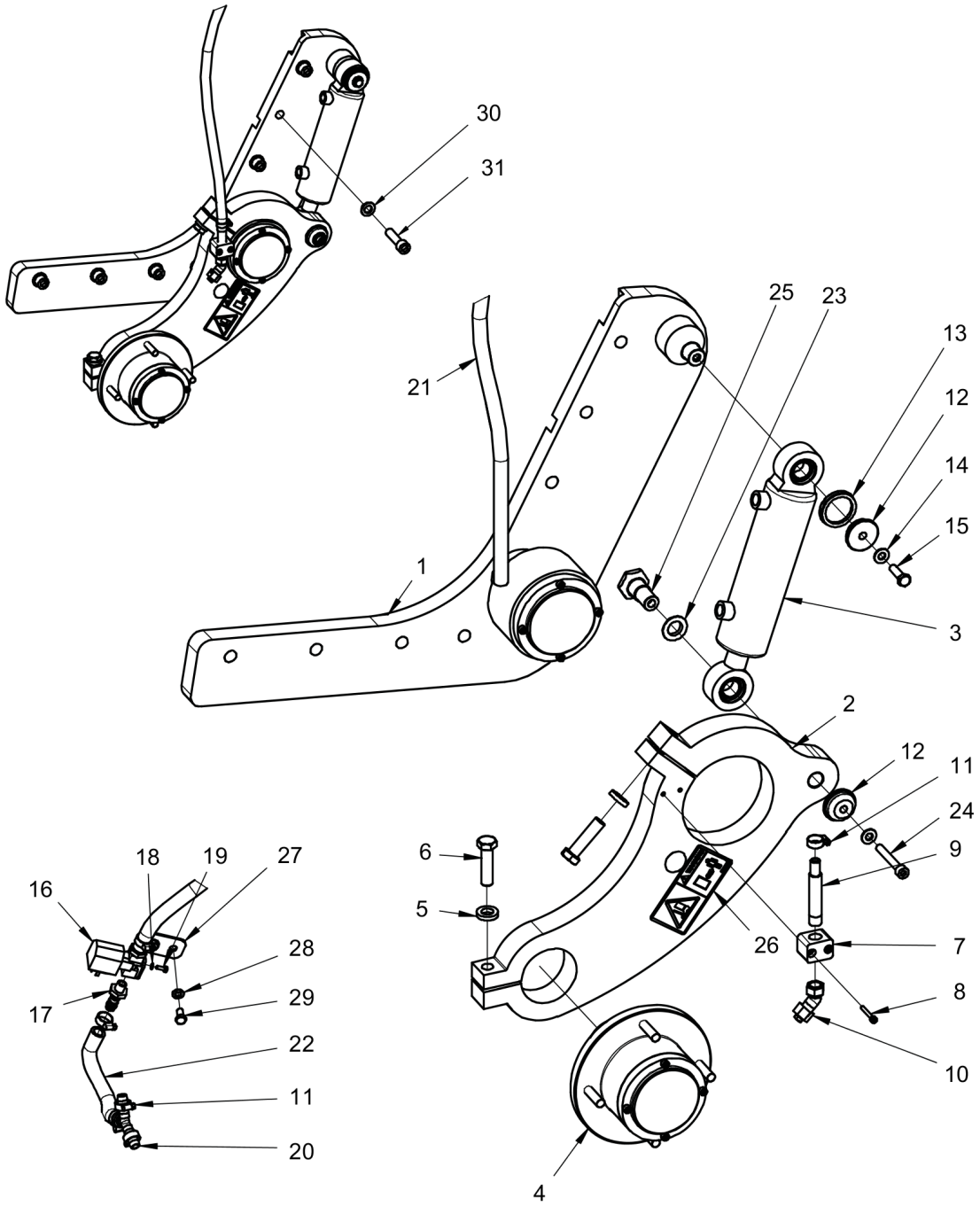

Item	Part No.	Name	Qty	L	SN INFO
1		Holder	1		
2	4812123285	Arm	1		
3	4812120738	Hydraulic cylinder, cpl.	1		
4		Bearing unit	1		
5	4700904558	Washer, 17x30x6 mm 300 HV	2		
6	4700929069	Hexagon head screw	2		
7	4700791453	Pipe clamp block	1		
8	4700508024	Screw	2		
9	4700392058	Pipe	1		
10	4700392123	Nozzle body	1		
11	4700313002	Hose clamp	6		
12	4812121812	Washer	2		
13	4700791565	Sealing	1		
14	4700904230	Steel plain washer	2		
15	4700947684	Screw	1		
16	4700391438	Solenoid valve	1		
17	4700901432	Hose connection	2		
18	4700904698	Plain washer	2		
19	4700500002	Screw M4-0,7x12H 8.8	2		
20	4811000107	Hose connection	1		
21	4812112074	Plastic hose (x m)	3,1		
22	4812112074	Plastic hose (x m)	0,25		
23	4812126495	Washer	1		
24	4700904682	Screw	1		
25	4812126494	Shaft	1		
26	4700904083	Safety decal	1		
27	4812127082	Bracket	1		
28	4700904229	Washer, 8.4x 6x1.5 mm 300HV	2		
29	4700500019	Hexagon screw	2		
30	4700904232	Steel plain washer	7		
31	4700508036	Screw, M16 x 60 mm 8.8 A3K	7		

Edge cutter Holder, edge cutter

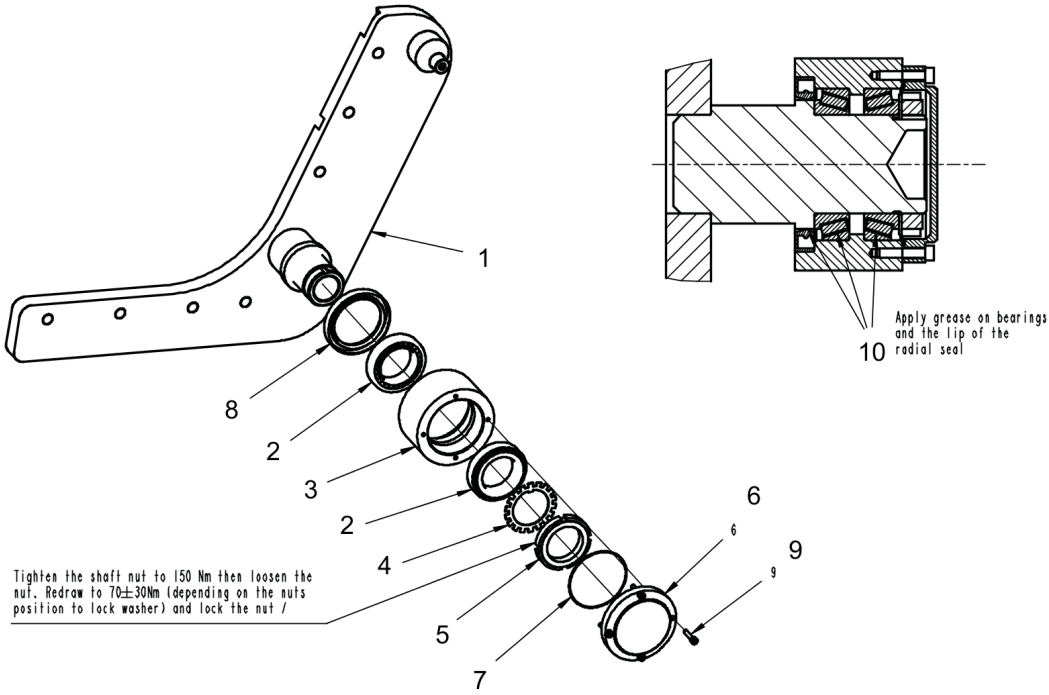

Item	Part No.	Name	Qty	L	SN INFO
1	4812124682	Holder	1		
2	4700792385	Taper roller bearing	2		
3	4700391008	Bearing housing	1		
4	4700136012	Lock washer	1		
5	4700135012	Shaft nut	1		
6	4700391010	Bearing cover	1		
7	4700900512	O-ring	1		
8	4700792384	Radial lip-type seal	1		
9	4700508018	Screw	4		
10		Lube grease	N		

Edge cutter 4812120738 Hydraulic cylinder

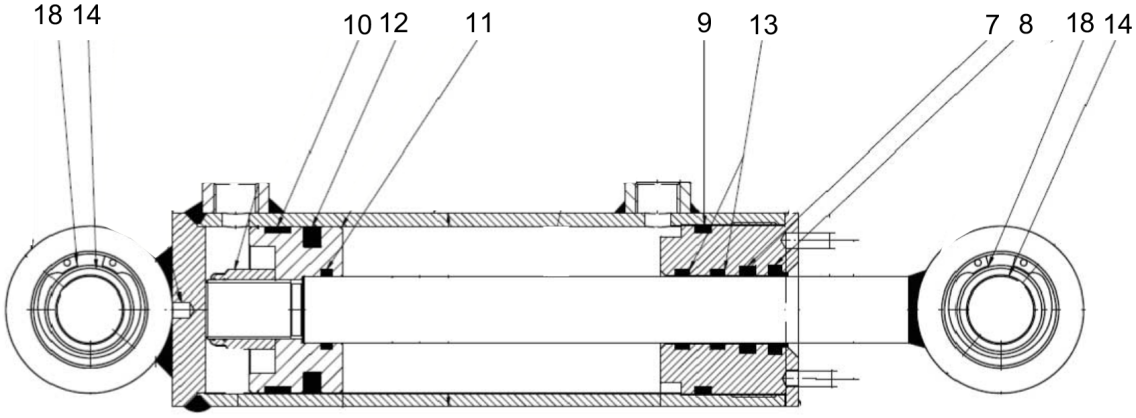

Item	Part No.	Name	Qty	L	SN INFO
0	4812120738	Hydraulic cylinder, cpl.	1		
1	4812160655	Seal kit	1		
7	-	Piston seal	1		
8	-	Piston seal	1		
9	-	Piston guides	1		
10	-	Piston guides	1		
11	-	O-ring	1		
12	-	Piston seal	1		
13	-	Rod guides	2		
14	4812160657	Bearing	2		
18	4812160656	Snap ring	4		

Edge cutter Bearing unit

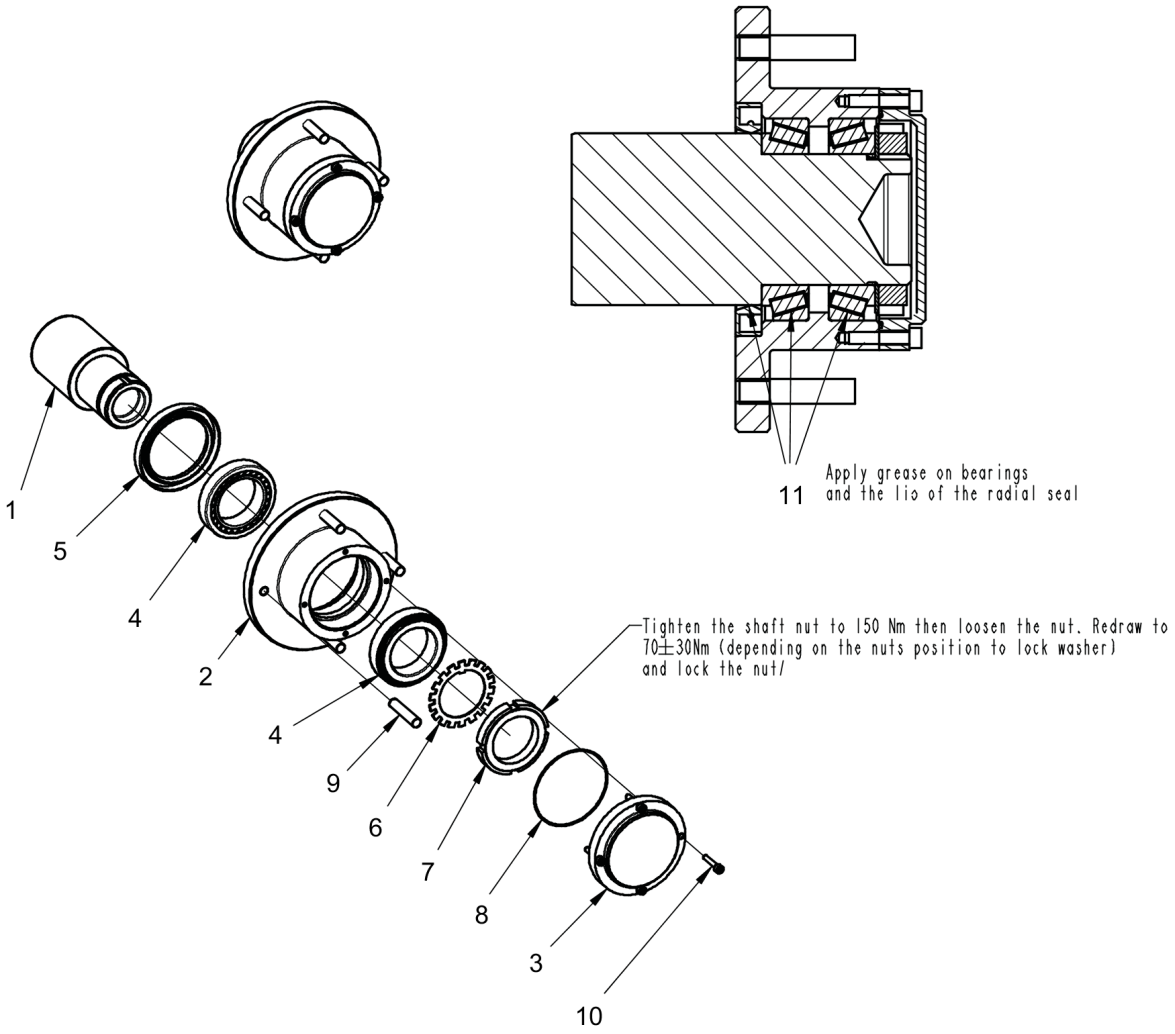

Item	Part No.	Name	Qty	L	SN INFO
1	4812123307	Shaft	1		
2	4700391012	Bearing housing	1		
3	4700391010	Bearing cover	1		
4	4700792385	Taper roller bearing	2		
5	4700792384	Radial lip-type seal	1		
6	4700136012	Lock washer	1		
7	4700135012	Shaft nut	1		
8	4700900512	O-ring	1		
9	4700903891	Stud	4		
10	4700508018	Screw	4		
11		Lube grease	N		

Edge cutter Edge cutter, left

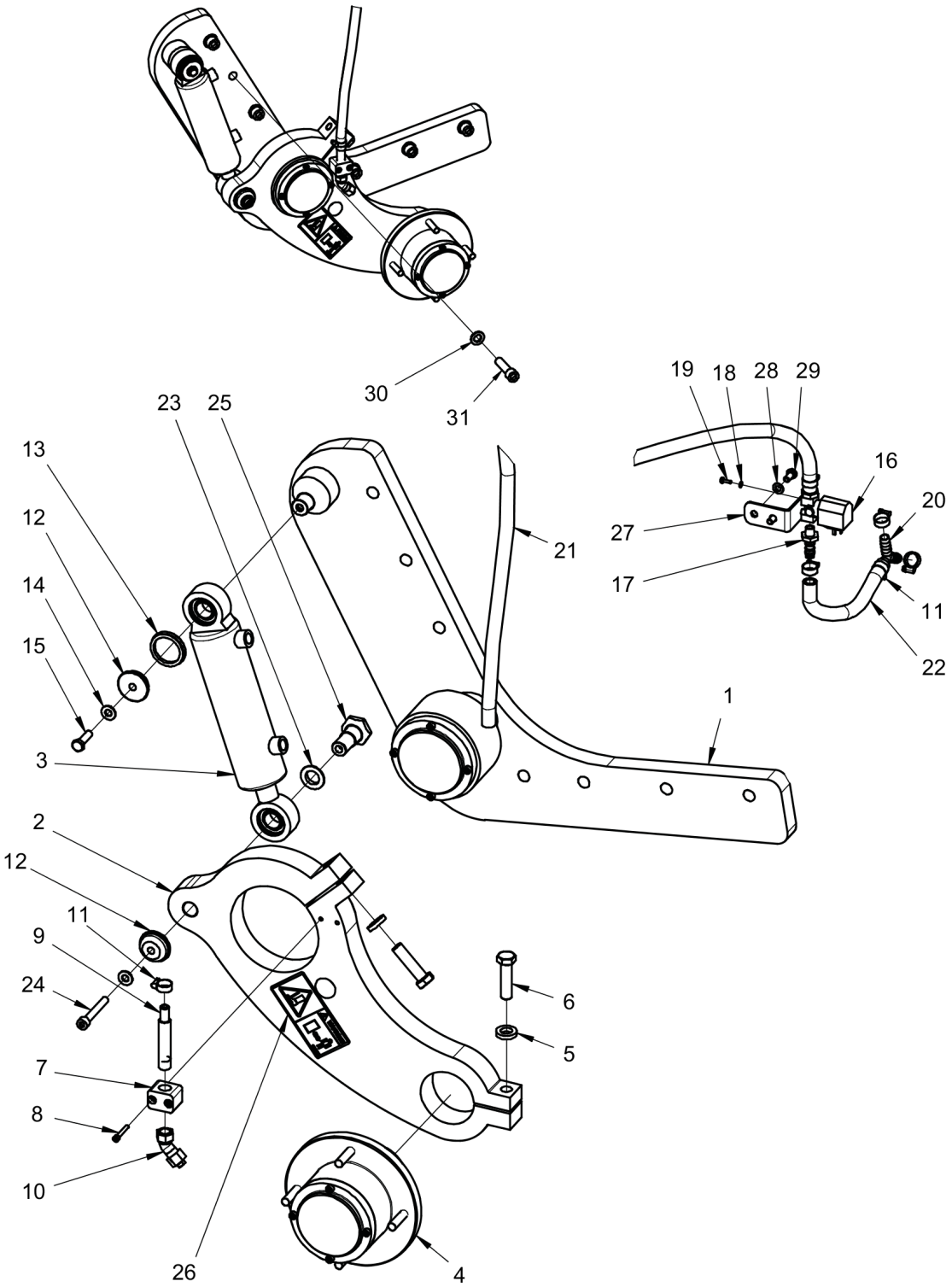

Item	Part No.	Name	Qty	L	SN INFO
1	4812126740	Holder	1		
2	4812123285	Arm	1		
3	4812120738	Hydraulic cylinder, cpl.	1		
4	4812123306	Bearing unit	1		
5	4700904558	Washer, 17x30x6 mm 300 HV	2		
6	4700929069	Hexagon head screw	2		
7	4700791453	Pipe clamp block	1		
8	4700508024	Screw	2		
9	4700392058	Pipe	1		
10	4700392123	Nozzle body	1		
11	4700313002	Hose clamp	6		
12	4812121812	Washer	2		
13	4700791565	Sealing	1		
14	4700904230	Steel plain washer	2		
15	4700947684	Screw	1		
16	4700391438	Solenoid valve	1		
17	4700901432	Hose connection	2		
18	4700904698	Plain washer	2		
19	4700500002	Screw M4-0,7x12H 8.8	2		
20	4811000107	Hose connection	1		
21	4812112074	Plastic hose (x m)	3,5		
22	4812112074	Plastic hose (x m)	0,25		
23	4812126495	Washer	1		
24	4700904682	Screw	1		
25	4812126494	Shaft	1		
26	4700904083	Safety decal	1		
27	4812127082	Bracket	1		
28	4700904229	Washer, 8.4x 6x1.5 mm 300HV	2		
29	4700500019	Hexagon screw	2		
30	4700904232	Steel plain washer	7		
31	4700508036	Screw, M16 x 60 mm 8.8 A3K	7		

Edge cutter Holder, edge cutter

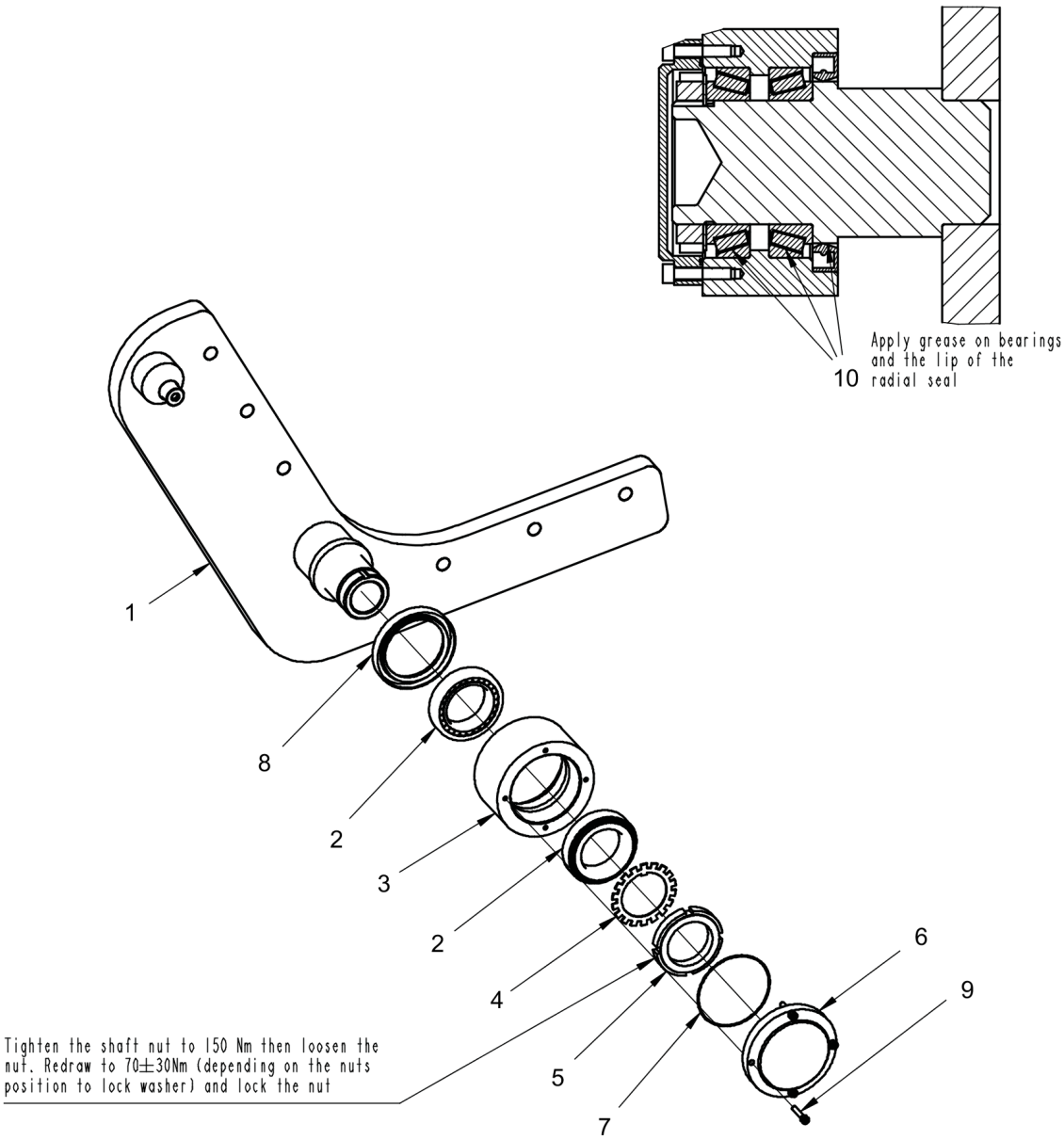

Item	Part No.	Name	Qty	L	SN INFO
1	4812126741	Holder	1		
2	4700792385	Taper roller bearing	2		
3	4700391008	Bearing housing	1		
4	4700136012	Lock washer	1		
5	4700135012	Shaft nut	1		
6	4700391010	Bearing cover	1		
7	4700900512	O-ring	1		
8	4700792384	Radial lip-type seal	1		
9	4700508018	Screw	4		
10		Lube grease	N		

Edge cutter Holder module

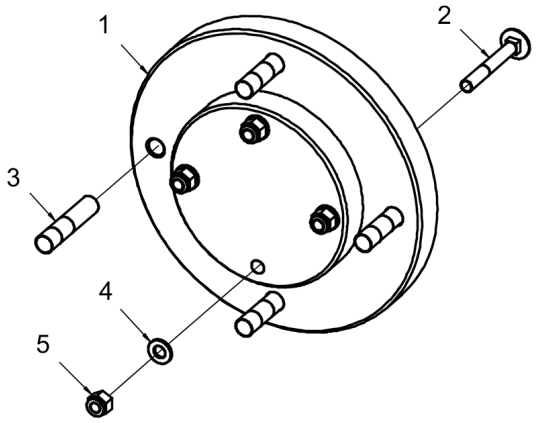

Item	Part No.	Name	Qty	L	SN INFO
1	4812126629	Holder	1		
2	4700903989	Bolt	4		
3	4700903891	Stud	4		
4	4700904229	Washer, 8.4x 6x1.5 mm 300HV	4		
5	4700586003	Lock nut M8	4		

Edge cutter Pressing roller, module

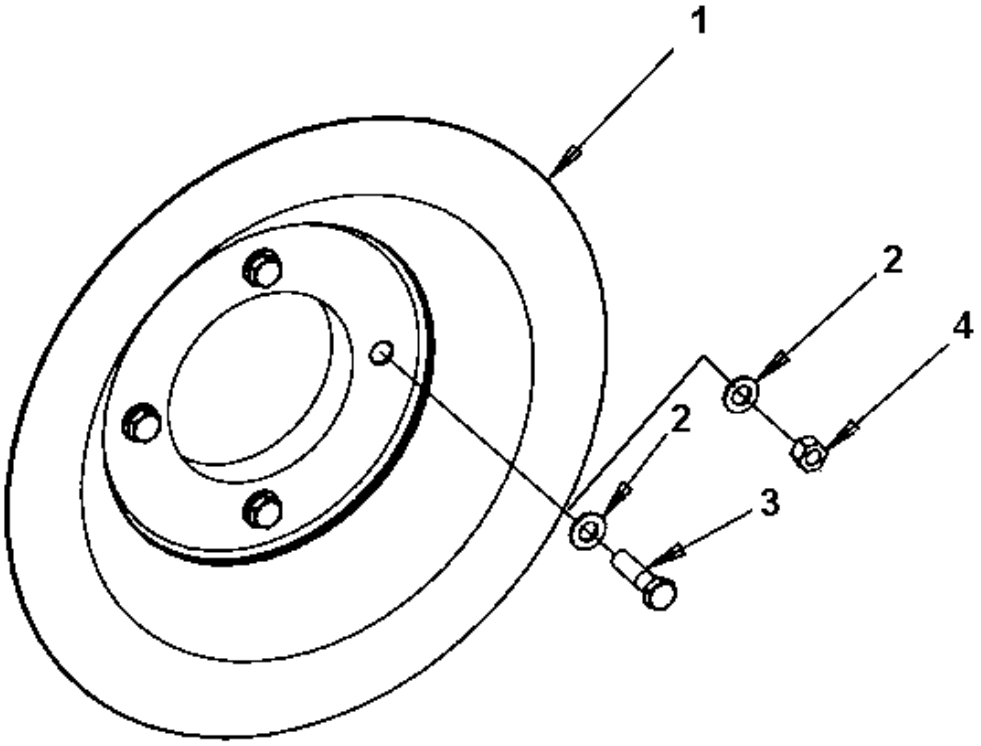

Item	Part No.	Name	Qty	L	SN INFO
1	4700390808	Pressing roller	1		
2	4700904231	Washer, 13x24x2 mm 300 HV	4		
3	4700500056	Screw, M12x45 mm 8.8 A3K	4		
4	4700570007	Nut	4		

Edge cutter Cutting disc module

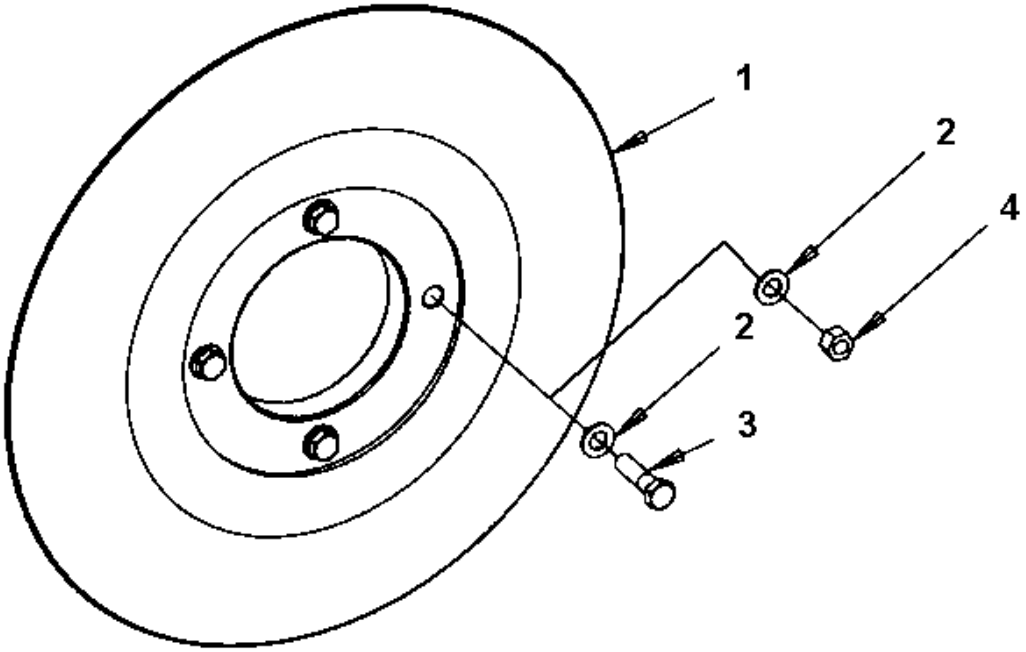

Item	Part No.	Name	Qty	L	SN INFO
1	4700390805	Cutting disc 80mm	1		
1	4700390806	Cutting disc 120mm	1		
1	4700390807	Cutting disc 150mm	1		
2	4700904231	Washer, 13x24x2 mm 300 HV	4		
3	4700500056	Screw, M12x45 mm 8.8 A3K	4		
4	4700570007	Nut	4		

Appendix B:Parts Index

0211110321 . . . . . 34, 40
0211110351 40
0211110355 34
0211110375 . . . . . 34, 40
0248998073 252
0570704101 230
291112842 30
391002 396
391015 396
391615 20
392278 260
392376 260
392449 260
4700116041 . . . . . 14, 90
4700135012 . . . . . 400, 404, 408
4700136012 . . . . . 400, 404, 408
4700150008 38
4700151015 . . . . . 22, 28, 30, 34
4700160045 . . . . . 12, 88
4700160080 . . . . . 120, 136
4700160105 . . . . . 14, 90
4700160188 90
4700160219 66
4700160268 76
4700160279 218
4700160287 236
4700160296 30
4700160313 . . . . . 66, 80
4700160318 . . . . . 66, 80
4700160344 . . . . . 12, 88, 90
4700162015 212
4700162017 84
4700202042 . . . . . 130, 130, 130, 130, 132, 132, 132, 132
4700202057 . . . . . 24, 24
4700232039 212
4700272372 . . . . . 142, 158
4700272373 212
4700282603 242
4700287294 232
4700287295 136
4700288129 . . . . . 112, 114, 114, 114, 130
4700313001 . . . . . 120, 126, 136
4700313002 . . . . . 64, 66, 74, 82, 126, 398, 406
4700313003 . . . . . 64, 66, 136
4700313006 . . . . . 118, 130
4700313008 212
4700313009 . . . . . 118, 130
4700313010 . . . . . 118, 130
4700313022 384
4700313038 104
4700313041 . 64, 106, 126, 214, 236, 248, 252, 254, 258, 260, 262, 280, 288, 290, 292, 298, 302, 304, 304, 326, 364, 364, 390
4700313102 . . . . . 74, 120, 166, 168, 170, 170, 226, 230
4700313105 . . . . . 66, 104
4700330170 126
4700330171 126
4700331109 130
4700335914 . . . . . 216, 218, 226
4700340862 90
4700343318 90
4700343732 . . . . . 216, 218
4700343744 84
4700343872 . . . . . 216, 218
4700349715 90
4700350009 340
4700355704 214
4700355797 268
4700356273 396
4700357138 . . . . . 8, 10, 212
4700357139 212
4700357587 . . . . . 34, 40
4700357643 152
4700358254 . . . . . 152, 334
4700358881 72
4700359043 342
4700359125 342
4700359819 342
4700359916 340
4700359919 340
4700359955 84
4700359989 100
4700370155 236
4700370234 348
4700370286 328
4700370745 66
4700371767 112
4700372672 340
4700372696 348
4700372697 348
4700372718 66
4700372964 340
4700372965 340
4700373183 34
4700373432 226
4700377253 . . . . . 70, 80
4700377742 40
4700377743 34
4700377744 . . . . . 282, 322
4700379009 64
4700379650 90
4700379652 88

4700379749 84
4700379992 . . . . . 32, 282, 322
4700380435 124
4700381413 120
4700382751 . . . . . 34, 40
4700383705 334
4700384114 . . . . . 86, 90
4700384584 334
4700385599 364
4700386075 348
4700386272 . . . . . 14, 90
4700387789 212
4700388446 230
4700388449 . . . . . 146, 160
4700388737 364
4700390365 . . . . . 140, 142, 156, 158
4700390602 . . . . . 178, 180
4700390805 414
4700390806 414
4700390807 414
4700390808 412
4700391008 . . . . . 400, 408
4700391010 . . . . . 400, 404, 408
4700391012 404
4700391029 88
4700391031 30
4700391163 340
4700391299 . . . . . 112, 112, 112, 112
4700391353 66
4700391358 96
4700391438 . . . . . 82, 398, 406
4700391444 . . . . . 70, 80
4700392058 . . . . . 398, 406
4700392123 . . . . . 398, 406
4700392221 248
4700392224 66
4700392226 80
4700392227 66
4700392230 66
4700392232 66
4700392235 66
4700392450 262
4700392451 262
4700393360 . . . . . 34, 34, 34, 34
4700393486 44
4700393542 66
4700393551 44
4700393959 . . . . . 142, 158
4700394119 . . . . . 282, 322
4700394169 96
4700394250 . . . . . 16, 86
4700394337 372
4700394340 44
4700394591 72
4700394806 48
4700395816 . . . . . 254, 298, 326
4700395915 . . . . . 218, 222
4700396035 388
4700396635 256
4700396656 226
4700396657 226
4700396672 . . . . . 66, 80, 124
4700397609 136
4700475064 38
4700476019 370
4700480354 222
4700480852 . . . . . 64, 66
4700483716 . . . . . 168, 172
4700483726 . . . . . 168, 170
4700483729 170
4700483788 . . . . . 166, 170
4700490039 . . . . . 400, 404, 408
4700499174 328
4700500001 82
4700500002 . . . . . 254, 398, 406
4700500003 . . . . . 136, 242, 254
4700500009 124
4700500012 . . . . . 80, 140, 142, 152, 156, 158, 370
4700500013 . . . . . 66, 80, 112, 114, 130, 246, 254
4700500018 218
4700500019 . . . . . 32, 64, 84, 102, 102, 106, 130, 242, 398, 406
4700500021 . . . . . 22, 58, 72, 122, 212, 234, 274, 336, 340, 346, 348, 382
4700500022 . . . . . 166, 170, 242, 274
4700500023 108
4700500025 . . . . . 140, 142, 156, 158
4700500028 . . . . . 30, 38, 52, 54, 66, 78, 88, 106, 166, 232, 350, 352
4700500029 . . . . . 96, 112
4700500030 . . . . . 34, 40, 112, 126
4700500031 . . . . . 46, 76
4700500032 . . . . . 46, 76
4700500035 118
4700500040 . . . . . 70, 148, 150, 162, 164, 254
4700500046 . . . . . 100, 218, 282, 322
4700500047 60
4700500048 . . . . . 166, 170, 174
4700500049 90
4700500051 . . . . . 226, 230, 252
4700500053 . 22, 26, 32, 102, 126, 130, 140, 142, 212, 212, 232, 234, 254, 280, 304, 344, 370, 384, 394
4700500056 . . . . . 38, 100, 412, 414
4700500067 230
4700500070 . . . . . 84, 84

4700500075 . . . . . 106, 230, 250
4700500082 90
4700500089 214
4700500093 100
4700500096 388
4700500105 48
4700500109 166
4700500111 100
4700500153 368
4700500161 . . . . . 54, 58
4700500169 134
4700500175 250
4700500189 . . . . . 64, 212
4700500198 48
4700500200 78
4700500205 . . . . . 282, 322
4700500230 . . . . . 78, 106
4700500267 40
4700500269 22
4700500270 . . . . . 178, 210
4700500284 . . . . . 32, 84
4700500287 28
4700500501 230
4700500502 64
4700500503 . . . . . 120, 396
4700500504 . . . . . 166, 170, 214
4700500505 . . . . . 58, 118, 168, 170, 214, 218, 364
4700500506 230
4700500508 232
4700500509 214
4700502135 152
4700508002 . . . . . 34, 40, 90
4700508005 254
4700508018 . . . . . 400, 404, 408
4700508019 . . . . . 102, 104
4700508022 104
4700508024 . . . . . 398, 406
4700508025 . . . . . 328, 348
4700508029 . . . . . 340, 372
4700508036 . . . . . 398, 406
4700508048 . . . . . 230, 230
4700508057 . . . . . 96, 366
4700508058 106
4700508080 96
4700508092 . . . . . 102, 106, 336, 338, 350, 352
4700509025 96
4700513003 . . . . . 140, 142, 156, 158, 216, 346, 372
4700513008 152
4700516040 340
4700533050 250
4700570002 . . . . . 290, 308, 332
4700570004 . . . . . 140, 142, 156, 158, 364
4700570005 . . . . . 78, 106, 140, 142, 156, 158, 240, 242, 252, 346, 372
4700570006 48
4700570007 . . . . . 412, 414
4700570008 . . . . . 92, 94
4700570101 252
4700573008 . . . . . 242, 342
4700586001 . . . . . 140, 142, 156, 158
4700586002 . . . . . 22, 70, 80, 146, 152, 160, 242, 254, 364, 368
4700586003 . . . . . 50, 56, 60, 256, 274, 340, 382, 410
4700586018 . . . . . 46, 46, 54, 58, 76, 76
4700586019 48
4700586021 100
4700601003 . . . . . 26, 302, 304, 318
4700603001 . . . . . 22, 152, 242
4700603007 . . . . . 66, 100, 100
4700606004 . . . . . 242, 252
4700615050 38
4700615065 26
4700629008 72
4700630008 342
4700747282 126
4700791082 48
4700791120 212
4700791171 . . . . . 146, 152, 160
4700791182 . . . . . 152, 328
4700791185 296
4700791212 212
4700791267 120
4700791304 346
4700791343 230
4700791388 152
4700791401 226
4700791409 . . . . . 174, 214, 230
4700791410 174
4700791412 210
4700791453 . . . . . 398, 406
4700791475 302
4700791524 340
4700791547 214
4700791565 . . . . . 398, 406
4700791568 64
4700791572 . . . . . 354, 356, 358, 360
4700791597 . . . . . 112, 114, 130, 130, 130
4700791631 166
4700791642 . . . . . 104, 146, 160
4700791666 . . . . . 26, 36, 42
4700791709 . . . . . 236, 240, 260
4700791711 232
4700791712 . . . . . 218, 232
4700791723 364

4700791733 364
4700791736 364
4700791739 364
4700791743 . . . . . 168, 172, 174, 230
4700791745 . . . . . 178, 210, 236
4700791776 76
4700791791 210
4700791792 212
4700791798 . . . . . 174, 212
4700791799 236
4700791805 . . . . . 136, 232
4700791821 . . . . . 174, 174, 230
4700791823 . . . . . 174, 214, 230
4700791828 226
4700791829 178
4700791832 178
4700791840 226
4700791841 . . . . . 230, 236
4700791845 . . . . . 166, 170
4700791846 . . . . . 214, 396
4700791849 226
4700791851 212
4700791853 . . . . . 178, 210
4700791860 216
4700791949 64
4700791951 264
4700791956 42
4700791957 36
4700791959 64
4700791966 296
4700791970 300
4700792035 268
4700792059 264
4700792061 . . . . . 216, 232
4700792065 64
4700792068 166
4700792072 76
4700792073 . . . . . 64, 64, 64, 66, 226
4700792083 . . . . . 30, 230
4700792094 178
4700792103 . . . . . 312, 328
4700792111 174
4700792114 . . . . . 218, 226
4700792115 . . . . . 178, 210
4700792119 116
4700792133 . . . . . 172, 174
4700792210 278
4700792270 . . . . . 12, 88, 90
4700792276 212
4700792295 120
4700792299 . . . . . 166, 170, 174, 212
4700792309 254
4700792310 254
4700792311 252
4700792325 152
4700792326 232
4700792334 236
4700792336 . . . . . 178, 210
4700792337 178
4700792339 212
4700792342 236
4700792343 236
4700792347 . . . . . 178, 210
4700792350 264
4700792353 264
4700792354 . . . . . 266, 268
4700792384 . . . . . 400, 404, 408
4700792385 . . . . . 400, 404, 408
4700792389 396
4700792394 30
4700792398 260
4700792410 274
4700792422 . . . . . 240, 278, 300
4700792441 . . . . . 106, 126, 132, 136, 240, 252, 254, 274, 356, 360, 390
4700792447 328
4700792448 328
4700792452 238
4700792453 214
4700792465 178
4700792493 250
4700792505 . . . . . 292, 296
4700792515 30
4700792519 . . . . . 270, 272
4700792520 . . . . . 270, 272
4700792521 264
4700792527 . . . . . 350, 352, 354, 356, 358, 360
4700792536 334
4700792537 240
4700792539 340
4700792540 . . . . . 50, 56
4700792554 . . . . . 22, 28, 30, 34
4700792563 . . . . . 178, 210
4700792586 232
4700792589 334
4700792600 66
4700792601 38
4700792607 280
4700792609 . . . . . 136, 262
4700792634 372
4700792649 178
4700792658 . . . . . 214, 238
4700792667 . . . . . 240, 364

4700792678 342
4700792686 . . . . . 240, 390
4700792701 . . . . . 216, 218
4700792702 218
4700792718 . . . . . 302, 302
4700792731 248
4700792779 . . . . . 64, 66
4700792781 66
4700792796 . . . . . 22, 22, 22
4700792810 178
4700792813 64
4700792817 . . . . . 216, 218
4700813443 124
4700813617 222
4700813618 222
4700900512 . . . . . 400, 404, 408
4700900775 . . . . . 88, 90
4700901157 . . . . . 178, 210
4700901174 242
4700901225 . . . . . 240, 240
4700901226 . . . . . 240, 260
4700901227 . . . . . 240, 240, 260
4700901228 240
4700901432 . . . . . 64, 82, 398, 406
4700901832 . . . . . 106, 118, 218, 236
4700902064 266
4700902147 244
4700902166 . . . . . 26, 26, 112, 112, 140, 142, 152, 156, 158
4700902173 152
4700902285 . . . . . 230, 368
4700902286 . . . . . 118, 136, 348
4700902289 78
4700902379 . . . . . 312, 312
4700902520 340
4700902541 30
4700902569 . . . . . 140, 142, 156, 158
4700902624 . . . . . 182, 194, 202
4700902625 . . . . . 182, 188, 194, 200, 202, 208
4700902638 182
4700902687 182
4700902688 . . . . . 196, 204
4700902695 182
4700902724 . . . . . 182, 194, 202
4700902752 182
4700902783 188
4700902792 . . . . . 186, 194, 202
4700902804 66
4700902811 . . . . . 196, 204
4700902866 . . . . . 24, 364
4700902919 32
4700902989 242
4700903236 124
4700903290 78
4700903422 . . . . . 140, 142, 156, 158
4700903423 . . . . . 140, 142, 156, 158
4700903424 . . . . . 140, 142, 156, 158
4700903425 334
4700903456 232
4700903586 . . . . . 212, 216, 218, 226, 232
4700903590 292
4700903640 254
4700903703 118
4700903714 120
4700903773 236
4700903831 34
4700903885 130
4700903891 . . . . . 404, 410
4700903917 340
4700903918 340
4700903953 66
4700903989 410
4700904036 254
4700904037 . . . . . 240, 258
4700904039 240
4700904056 . . . . . 216, 218
4700904083 . . . . . 398, 406
4700904165 384
4700904206 . . . . . 68, 132, 296, 362, 364
4700904213 218
4700904214 340
4700904225 . . . . . 32, 38
4700904228 40, 90, 106, 132, 140, 142, 156, 158, 214, 246, 254, 328, 364, 368, 370
4700904229 . 22, 50, 56, 60, 64, 84, 96, 102, 102, 102, 102, 102, 106, 126, 140, 142, 156, 158, 166, 170, 218, 234, 240, 252, 254, 256, 274, 280, 302, 340, 342, 344, 346, 370, 372, 382, 384, 388, 394, 398, 406, 410
4700904230 . 38, 46, 46, 52, 54, 58, 76, 78, 88, 112, 166, 166, 170, 174, 350, 352, 372, 398, 406
4700904231 22, 30, 34, 38, 40, 48, 84, 84, 86, 90, 100, 118, 226, 230, 250, 252, 282, 322, 412, 414
4700904232 . . . . . 84, 84, 92, 94, 398, 406
4700904233 . . . . . 28, 32, 34, 40, 84, 282, 322
4700904234 . . . . . 34, 40, 40
4700904274 242
4700904281 . . . . . 124, 136, 140, 142, 156, 158, 242, 254
4700904289 366
4700904312 242
4700904340 368
4700904347 . . . . . 286, 302, 312, 330
4700904352 230
4700904386 34
4700904405 78

4700904496 . . . . . 178, 210
4700904521 124
4700904556 . . . . . 22, 64, 72, 106, 122, 242, 336, 346, 348
4700904557 . . . . . 34, 40, 46, 54, 66, 76, 126, 232, 372
4700904558 . . . . . 30, 178, 210, 398, 406
4700904567 30
4700904575 104
4700904581 218
4700904584 . . . . . 178, 210
4700904619 368
4700904629 218
4700904637 96
4700904640 . 22, 32, 58, 72, 78, 104, 106, 130, 140, 142, 212, 232, 234, 274, 340, 342, 382
4700904641 178
4700904653 132
4700904654 70
4700904663 . . . . . 140, 142
4700904682 . . . . . 398, 406
4700904697 250
4700904698 . . . . . 82, 104, 124, 240, 242, 254, 366, 398, 406
4700904703 . . . . . 22, 38, 100, 354, 356, 358, 360
4700904734 . . . . . 60, 130, 212, 212
4700904735 . . . . . 66, 112, 114, 130, 134, 230, 250, 396
4700904780 260
4700904781 174
4700904787 218
4700904835 . . . . . 142, 158
4700904872 136
4700904895 . . . . . 142, 156, 158
4700904911 246
4700904956 . . . . . 36, 42, 264, 270, 272
4700904985 . . . . . 126, 126
4700904986 . . . . . 126, 126
4700908229 40
4700908383 . . . . . 194, 202
4700908505 296
4700908506 296
4700908507 296
4700908561 . . . . . 288, 292, 298
4700908564 . . . . . 288, 292, 298
4700909084 . . . . . 126, 126
4700909243 222
4700909335 222
4700909336 222
4700909338 222
4700909339 222
4700909340 222
4700909342 222
4700909343 222
4700909344 222
4700909346 222
4700909350 222
4700909351 222
4700909352 222
4700909354 222
4700909356 222
4700909358 222
4700909469 . . . . . 182, 188, 200, 208
4700909514 . . . . . 182, 188, 194, 194, 200, 202, 202, 208
4700909535 348
4700909536 348
4700910162 174
4700910713 222
4700921046 . . . . . 214, 396
4700921050 118
4700921080 262
4700921116 134
4700923008 226
4700923087 . . . . . 222, 224
4700923090 222
4700923135 . . . . . 156, 158
4700923253 266
4700923270 32
4700923405 178
4700923648 368
4700923735 . . . . . 64, 82, 302, 304
4700924791 368
4700924875 . . . . . 140, 142, 156, 158, 368
4700924986 130
4700925208 28
4700925599 78
4700925784 240
4700925802 388
4700926214 34
4700926215 . . . . . 32, 326
4700926736 90
4700927233 38
4700927278 . . . . . 188, 200, 208
4700927303 186
4700927358 . . . . . 194, 202
4700927974 . . . . . 140, 142, 156, 158, 368
4700928347 . . . . . 354, 356, 358, 360
4700928381 . . . . . 70, 80, 146, 148, 150, 160, 162, 164, 286, 302, 330
4700928441 96
4700928513 130
4700928784 . . . . . 22, 242
4700929069 . . . . . 66, 398, 406
4700929185 98
4700929409 32
4700929447 . . . . . 14, 90
4700929455 268

4700930046 250
4700935158 . . . . . 194, 202
4700935164 . . . . . 186, 198, 206
4700935192 188
4700935210 190
4700935219 . . . . . 182, 194, 202
4700936283 348
4700936308 . . . . . 182, 194, 202
4700936313 . . . . . 188, 200, 208
4700936392 . . . . . 200, 208
4700936393 . . . . . 196, 196, 204, 204
4700936394 . . . . . 188, 196, 204
4700936612 182
4700936615 186
4700936616 186
4700936617 186
4700936618 186
4700936619 186
4700936621 . . . . . 186, 198, 206
4700936622 186
4700936623 186
4700936624 186
4700936625 186
4700936626 186
4700936627 186
4700936628 186
4700936629 186
4700936630 186
4700936631 186
4700936632 186
4700936633 186
4700936634 186
4700936635 186
4700936636 186
4700936637 186
4700936642 182
4700936643 182
4700936644 182
4700936646 182
4700936647 182
4700936648 182
4700936654 182
4700936655 182
4700936656 182
4700936662 188
4700936664 188
4700936665 188
4700936673 . . . . . 188, 200, 208
4700936686 . . . . . 194, 202
4700936689 190
4700936855 . . . . . 188, 200, 208
4700936869 . . . . . 190, 194, 202
4700936898 . . . . . 166, 170
4700937174 . . . . . 198, 206
4700937175 . . . . . 198, 206
4700937182 206
4700937185 . . . . . 198, 206
4700937186 . . . . . 198, 206
4700937187 . . . . . 198, 206
4700937188 . . . . . 198, 206
4700937195 . . . . . 194, 196, 202, 204
4700937206 . . . . . 194, 202
4700937236 . . . . . 196, 204
4700937620 . . . . . 350, 352
4700937621 . . . . . 350, 352
4700937892 . . . . . 350, 352
4700937987 . . . . . 200, 208
4700938014 182
4700938891 14
4700939333 222
4700940533 98
4700940676 182
4700945145 . . . . . 6, 8, 10
4700945311 190
4700945776 . . . . . 194, 202
4700945903 12
4700947679 342
4700947680 106
4700947684 . . . . . 398, 406
4700947689 22
4700947698 86
4700950297 224
4700950461 . . . . . 194, 202
4700950593 222
4700989151 212
4700991657 80
4700999014 312
4811000085 64
4811000107 . . . . . 64, 398, 406
4811000163 260
4811000260 238
4811000265 392
4811000268 300
4811000269 300
4811000391 . . . . . 168, 172
4811000458 . . . . . 304, 308, 318
4811000481 106
4812007588 376
4812007591 376
4812013040 280
4812101815 98
4812101816 98

4812110272 . . . . . 214, 218
4812110346 . . . . . 84, 90
4812110444 . . . . . 84, 90
4812110560 . . . . . 298, 326
4812110586 364
4812110641 84
4812110642 86
4812110671 60
4812110672 56
4812110673 106
4812110748 . . . . . 140, 142
4812111325 64
4812111332 . . . . . 64, 66
4812111981 254
4812112000 254
4812112017 312
4812112074 . 64, 64, 64, 64, 64, 64, 64, 64, 64, 66, 66, 74, 74, 74, 74, 82, 82, 82, 82, 398, 398, 406, 406
4812112097 78
4812112260 . . . . . 166, 170
4812112262 . . . . . 4, 8, 10, 166, 170
4812112355 96
4812112413 90
4812112475 252
4812112530 230
4812112555 . . . . . 166, 170, 212
4812112766 300
4812112774 274
4812113032 382
4812113083 386
4812113245 386
4812113633 . . . . . 230, 230
4812113679 234
4812113708 . . . . . 112, 112
4812113941 . . . . . 232, 232
4812114098 120
4812114194 300
4812114213 364
4812114214 364
4812114245 386
4812114246 386
4812114257 384
4812114393 . . . . . 140, 142, 156, 158
4812114396 100
4812114465 130
4812114566 332
4812114567 . . . . . 286, 290, 292, 330
4812114579 300
4812114585 300
4812114598 306
4812114602 306
4812114603 306
4812114873 242
4812114949 124
4812115051 218
4812115168 . . . . . 302, 304, 304, 304
4812115177 296
4812115183 296
4812115187 . . . . . 292, 296
4812115188 300
4812115189 300
4812115190 300
4812115191 300
4812115192 . . . . . 292, 318
4812115199 296
4812115203 308
4812115215 306
4812115219 294
4812115220 294
4812115223 294
4812115228 312
4812115392 30
4812115398 30
4812115467 30
4812115511 230
4812115581 214
4812115768-3119 110
4812115810 364
4812115911 242
4812115947 30
4812115949 30
4812115950 30
4812116204 296
4812116205 300
4812116333 30
4812116334 30
4812116340 30
4812116357 350
4812116625 212
4812116702 30
4812116781 . . . . . 178, 210
4812116986 392
4812117024 174
4812117326 . . . . . 166, 168, 170, 170, 230
4812117379 120
4812117397 126
4812117512 30
4812117530 30
4812117602 116
4812117665 250
4812117677 . . . . . 168, 170
4812117737 28

4812117738 30
4812117905 252
4812117922 . . . . . 354, 356
4812117924 . . . . . 354, 358
4812117925 . . . . . 356, 360
4812118210 178
4812118697 364
4812118816 . . . . . 358, 360
4812119127 . . . . . 112, 120
4812119147 50
4812119155 44
4812119306 392
4812119317 364
4812119327 300
4812119330 340
4812119337 276
4812119435 308
4812119436 308
4812119437 308
4812119438 308
4812119449 306
4812119520 394
4812119629 230
4812119662 212
4812119788 342
4812119807 30
4812119809 30
4812119988 152
4812120127 156
4812120241 302
4812120251 300
4812120257 296
4812120266 298
4812120272 306
4812120313 158
4812120414 30
4812120469 274
4812120557 346
4812120615 30
4812120618 30
4812120663 120
4812120688 240
4812120706 66
4812120738 . . . . . 398, 402, 406
4812120838 396
4812120847 342
4812121111 30
4812121282 30
4812121396 30
4812121397 30
4812121398 30
4812121417 384
4812121665 30
4812121705 380
4812121747 136
4812121764 234
4812121795 106
4812121796 106
4812121797 106
4812121798 106
4812121808 134
4812121809 106
4812121812 . . . . . 398, 406
4812121926 388
4812121938 230
4812121940 230
4812121971 212
4812121972 . . . . . 166, 170, 212
4812121973 212
4812122104 106
4812122146 136
4812122213 136
4812122243 . . . . . 130, 136, 136, 136, 136, 136
4812122244 . . . . . 120, 120, 120, 136, 136
4812122380 388
4812122416 . . . . . 214, 214
4812122611 274
4812122657 134
4812122658 134
4812122659 134
4812122687 . . . . . 248, 254, 276
4812122704 240
4812122708 90
4812122722 20
4812122734 62
4812122832 232
4812122835 346
4812122840 346
4812122841 346
4812122844 346
4812122847 346
4812122848 364
4812122849 364
4812122850 364
4812122854 128
4812122868 282
4812122869 282
4812122870 322
4812122880 . . . . . 284, 316
4812122881 306
4812122882 306
4812122883 306

4812122884 . . . . . 284, 316, 324
4812122885 312
4812122886 312
4812122888 . . . . . 286, 330
4812122889 286
4812122897 . . . . . 288, 320
4812122898 292
4812122899 292
4812122900 292
4812122901 292
4812122902 292
4812122903 308
4812122907 286
4812122908 330
4812122912 290
4812122913 . . . . . 290, 332
4812122914 332
4812122915 . . . . . 290, 332
4812122917 . . . . . 290, 332
4812122918 284
4812122919 300
4812122920 300
4812122942 106
4812122978 366
4812122979 366
4812122980 366
4812122987 86
4812122991 344
4812122992 344
4812122993 344
4812122995 236
4812122997 340
4812122998 340
4812123000 84
4812123007 90
4812123035 256
4812123051 . . . . . 230, 232
4812123052 226
4812123054 226
4812123055 214
4812123056 232
4812123057 . . . . . 86, 214
4812123058 . . . . . 86, 214
4812123062 . . . . . 166, 170
4812123093 100
4812123094 100
4812123106 106
4812123107 106
4812123109-3086 110
4812123111-3159 110
4812123115 240
4812123138 340
4812123139 340
4812123140 340
4812123162 84
4812123177 32
4812123183 364
4812123195 32
4812123197 32
4812123199 90
4812123214 116
4812123216 118
4812123217 106
4812123244 . . . . . 174, 176
4812123257 100
4812123274 258
4812123285 . . . . . 398, 406
4812123298 212
4812123305 . . . . . 178, 210
4812123306 . . . . . 398, 406
4812123307 404
4812123326 244
4812123327 380
4812123328 380
4812123329 382
4812123330 384
4812123351 216
4812123352 216
4812123364 212
4812123395 . . . . . 170, 214
4812123398 252
4812123408 252
4812123411 252
4812123416 40
4812123418 40
4812123449 . . . . . 16, 34, 40
4812123452 . . . . . 34, 40
4812123456 128
4812123459 130
4812123460 130
4812123481 40
4812123494 44
4812123496 76
4812123497 . . . . . 18, 46, 76
4812123498 44
4812123512 130
4812123515 218
4812123516 214
4812123529 130
4812123539 128
4812123549 . . . . . 168, 168, 170, 216
4812123553 394

4812123574 274
4812123575 274
4812123600 106
4812123687 62
4812123690 104
4812123694 106
4812123711 124
4812123717 124
4812123718 124
4812123722 346
4812123724 348
4812123738 120
4812123777 66
4812123778 62
4812123788 84
4812123803 40
4812123813 278
4812123873 252
4812123895 22
4812123914 22
4812123918 216
4812123919 100
4812123922 236
4812123932 230
4812123933 230
4812123934 230
4812123935 230
4812123936 230
4812123939 260
4812123947 230
4812123948 230
4812123949 230
4812123950 232
4812123951 232
4812123953 232
4812123955 . . . . . 166, 170
4812123956 . . . . . 166, 170
4812123957 . . . . . 166, 170
4812123961 . . . . . 166, 170
4812123966 214
4812123982 214
4812123983 238
4812123984 214
4812123986 218
4812124009 218
4812124010 218
4812124023 . . . . . 168, 172
4812124026 218
4812124028 218
4812124029 396
4812124030 396
4812124035 . . . . . 178, 210
4812124045 . . . . . 166, 170
4812124046 . . . . . 166, 170
4812124049 214
4812124053 214
4812124054 214
4812124058 238
4812124096 102
4812124133 . . . . . 16, 40
4812124136 366
4812124137 364
4812124138 364
4812124139 66
4812124167 136
4812124175 20
4812124176 32
4812124177 32
4812124207 34
4812124209 232
4812124210 120
4812124219 40
4812124267 162
4812124268 164
4812124282 . . . . . 142, 158
4812124283 . . . . . 140, 156
4812124284 158
4812124289 66
4812124308 128
4812124315 130
4812124321 76
4812124323 76
4812124324 76
4812124325 76
4812124327 76
4812124328 76
4812124329 76
4812124330 76
4812124333 66
4812124334 26
4812124335 26
4812124339 . . . . . 350, 352
4812124376 62
4812124377 66
4812124442 394
4812124444 370
4812124452 160
4812124478 218
4812124479 218
4812124480 214
4812124481 214
4812124515 218

4812124527 214
4812124547 34
4812124549 34
4812124552 212
4812124566 34
4812124586 152
4812124636 106
4812124641 . . . . . 148, 150, 162, 164
4812124665 152
4812124676 84
4812124679 396
4812124681 398
4812124682 400
4812124686 24
4812124724 106
4812124746 156
4812124749 264
4812124750 260
4812124753 . . . . . 166, 170
4812124754 . . . . . 166, 170
4812124755 214
4812124758 214
4812124759 214
4812124760 238
4812124762 214
4812124763 218
4812124765 226
4812124766 226
4812124776 . . . . . 236, 236, 236, 236
4812124817 62
4812124822 218
4812124823 214
4812124831 . . . . . 168, 172
4812124896 166
4812124897 . . . . . 166, 170
4812124930 254
4812124932 252
4812124948 38
4812124951 252
4812124975 38
4812124988 254
4812125038 22
4812125042 22
4812125049 34
4812125050 34
4812125058 22
4812125064 126
4812125082 218
4812125083 218
4812125148 70
4812125170 152
4812125174 . . . . . 282, 322
4812125187 122
4812125188 124
4812125189 124
4812125197 118
4812125237 22
4812125238 24
4812125241 122
4812125242 122
4812125243 122
4812125252 124
4812125261 . . . . . 36, 42
4812125263 272
4812125264 260
4812125272 300
4812125275-80-84-5316 284
4812125276 304
4812125277 304
4812125278 304
4812125279 304
4812125286 298
4812125287 328
4812125288 326
4812125290 324
4812125291 324
4812125294 324
4812125297 328
4812125298 328
4812125299 328
4812125300 328
4812125301 328
4812125302 326
4812125303 330
4812125304 . . . . . 286, 330
4812125305 . . . . . 290, 332
4812125306 298
4812125308 . . . . . 284, 316
4812125309-1 . . . . . 284, 316
4812125309-2 . . . . . 284, 316
4812125310 . . . . . 284, 316
4812125312 . . . . . 284, 316
4812125313 . . . . . 284, 316, 324
4812125314 . . . . . 284, 316
4812125315-5289 316
4812125319 284
4812125320 308
4812125321 308
4812125322 308
4812125323 308
4812125324 308
4812125325 308

4812125326 308
4812125327 308
4812125328 292
4812125329 292
4812125330 292
4812125331 292
4812125332 292
4812125333 292
4812125334 292
4812125335 292
4812125336 290
4812125337 296
4812125338 296
4812125339 298
4812125340 298
4812125341 298
4812125342 298
4812125343 302
4812125344 302
4812125345 302
4812125346 302
4812125347 302
4812125348 304
4812125349 302
4812125350 302
4812125355 22
4812125357 96
4812125361 352
4812125371 38
4812125372 380
4812125374 390
4812125375 390
4812125376 390
4812125377 390
4812125388 260
4812125389 260
4812125401 38
4812125405 336
4812125407 . . . . . 336, 338
4812125409 . . . . . 336, 338
4812125410 322
4812125416 . . . . . 92, 94
4812125419 282
4812125502 260
4812125644 32
4812125645 126
4812125650 122
4812125663 276
4812125680 248
4812125685 248
4812125686 250
4812125687 250
4812125688 250
4812125689 128
4812125690 106
4812125691 106
4812125759 232
4812125781 . . . . . 140, 142, 156, 158
4812125783 . . . . . 140, 142, 156, 158
4812125785 . . . . . 140, 142, 156, 158
4812125823 106
4812125824 106
4812125825 106
4812125826 106
4812125853 90
4812125856 106
4812125885 364
4812125906 32
4812125917 242
4812125918 242
4812125919 242
4812125920 242
4812125921 242
4812125979 130
4812125980 130
4812125981 130
4812126010 116
4812126011 116
4812126045 . . . . . 16, 90
4812126048 112
4812126049 114
4812126052 112
4812126062 130
4812126086 104
4812126087 104
4812126089 104
4812126091 104
4812126098 . . . . . 32, 32
4812126100 40
4812126103 254
4812126104 252
4812126105 242
4812126106 242
4812126109 240
4812126134 382
4812126135 . . . . . 140, 156
4812126136 . . . . . 142, 158
4812126140 254
4812126176 242
4812126188 104
4812126191 46
4812126192 46

4812126198 340
4812126199 340
4812126201 368
4812126202 368
4812126203 368
4812126204 368
4812126205 368
4812126206 . . . . . 6, 8, 10, 104
4812126207 . . . . . 8, 10, 104
4812126208 220
4812126210 118
4812126216 112
4812126217 110
4812126218 110
4812126223 368
4812126235 130
4812126236 116
4812126238 364
4812126245 232
4812126249 362
4812126253 102
4812126254 102
4812126255 102
4812126256 102
4812126257 364
4812126258 232
4812126259 232
4812126278 280
4812126279 . . . . . 242, 260
4812126294 248
4812126295 248
4812126296 248
4812126299 252
4812126306 70
4812126314 . . . . . 70, 80
4812126327 130
4812126331 280
4812126341 286
4812126342 286
4812126343 288
4812126344 288
4812126345 288
4812126346 288
4812126347 288
4812126348 290
4812126349 290
4812126350 290
4812126351 304
4812126352 304
4812126354 294
4812126355 294
4812126356 310
4812126357 316
4812126358 318
4812126359 318
4812126364 318
4812126365 310
4812126366 310
4812126367 314
4812126402 260
4812126421 372
4812126423 92
4812126425 80
4812126428 260
4812126429 130
4812126430 78
4812126432 108
4812126436 270
4812126494 . . . . . 398, 406
4812126495 . . . . . 398, 406
4812126563 44
4812126568 116
4812126577 44
4812126578 54
4812126593 42
4812126629 410
4812126630 396
4812126685 . . . . . 64, 64
4812126694 78
4812126704 44
4812126705 130
4812126709 . . . . . 146, 160
4812126714 64
4812126740 406
4812126741 408
4812126758 210
4812126760 210
4812126777 278
4812126788 112
4812126789 112
4812126818 114
4812126819 114
4812126820 114
4812126824 . . . . . 146, 160
4812126909 132
4812126916 118
4812126917 118
4812126921 152
4812126922 . . . . . 166, 170
4812126923 118
4812126924 116
4812126935 152

4812126936 152
4812126937 152
4812126960 236
4812126961 . . . . . 140, 142, 156, 158
4812126995 58
4812126996 58
4812126997 58
4812127006 . . . . . 140, 142, 156, 158
4812127022 62
4812127032 52
4812127060 . . . . . 146, 148, 150, 160, 162, 164
4812127061 . . . . . 146, 160
4812127075 72
4812127080 22
4812127082 . . . . . 398, 406
4812127159 166
4812127161 166
4812127164 168
4812127165 168
4812127166 168
4812127167 166
4812127168 166
4812127209 32
4812127221 234
4812127224 82
4812127255 166
4812127353 78
4812127365 78
4812127381 232
4812127393 218
4812127401 94
4812127449 72
4812127612 218
4812127660 210
4812127662 170
4812127663 170
4812127664 170
4812127665 214
4812127714 . . . . . 34, 40
4812127715 . . . . . 282, 322
4812127728 142
4812127729 140
4812127819 374
4812127820 374
4812127929 374
4812127979 . . . . . 282, 322
4812127980 282
4812127981 282
4812127982 322
4812127983 . . . . . 282, 322
4812128216 142
4812128217 140
4812128218 146
4812128219 150
4812128220 148
4812128222 374
4812128502 142
4812128503 140
4812128506 142
4812128507 140
4812128510 144
4812128511 140
4812128514 144
4812128515 140
4812155785 . . . . . 180, 182
4812155786 . . . . . 180, 194
4812155787 . . . . . 180, 202
4812156151 182
4812156152 . . . . . 194, 202
4812156154 188
4812156170 16
4812156199 222
4812156599 190
4812157095 188
4812157170 192
4812157568 228
4812157569 228
4812157572 228
4812157654 176
4812157681 176
4812157682 176
4812157684 176
4812157685 176
4812157686 176
4812157687 176
4812157771 176
4812157772 176
4812157773 176
4812157851 188
4812158289 304
4812158367 . . . . . 350, 352
4812159094 180
4812159184 . . . . . 288, 292, 292, 292, 314, 320
4812159499 98
4812159754 206
4812159775 294
4812159964 98
4812160394 . . . . . 194, 202
4812160654 176
4812160655 402
4812160656 402
4812160657 402

4812160664 . . . . . 166, 170
4812160752 4
4812160783 . . . . . 6, 8, 10, 126
4812160877 . . . . . 294, 294, 294, 310, 310, 310
4812160885 228
4812160886 228
4812160887 228
4812160889 228
4812160890 228
4812160892 98
4812160893 98
4812160895 98
4812160896 98
4812160897 98
4812160954 10
4812161086 188
4812161090 192
4812161098 308
4812161155 . . . . . .294, 294, 310, 310, 310
4812161268 304
4812161352 . . . . . .292, 304, 332
4812161370 298
4812161371 312
4812161372 98
4812161373 98
4812161374 98
4812161375 98
4812161376 98
4812161377 98
4812161378 98
4812161379 98
4812161380 98
4812161381 98
4812161474 6
4812161475 8
4812161476 10
4812161591 228
4812161595 18
4812161597 16
4812215510 376
4812215511 376
4812215512 376
4812215516 376
4812315341 364
4812317429 . . . . . 6, 8, 10

Dynapac Compaction Equipment AB
Box 504, SE 371 23 Karlskrona, Sweden

www.dynapac.com