Parts Catalogue

DYNAPAC
FAYAT GROUP

CC1200 VI

Vibratory roller

CC1200 VI s/n 10000446xxA023389 -
Kubota D1703-DI-E4B (Stage V) (18,5 kW)

© 2019 Dynapac Compaction Equipment AB | No. 4812163160A| 2021-12

Your Partner
on the Road Ahead

dynapac.com

General information

Use only authorized parts. Any damage or malfunction caused by the use of unauthorized parts is not covered by Warranty or Product Liability.
Any unauthorized use or copying of the contents or any part thereof is prohibited. This applies in particular to trademarks, model denominations, part numbers, and drawings.

Instructions for use
This spare parts list contains no safety regulations and is merely intended to assist in the ordering of spare parts.
For information about operating, servicing, or repairing, the relevant Safety and operating instructions must be consulted at all costs.
Please observe the safety instructions listed in the relevant Safety and operating instructions!

CC1200 VI (18,5 kW) (Stage V) s/n 10000446xxA023389 -

Service kits

4812161674 Service kit, 50h . . . 1
4812161675 Service kit, 50h Plus . . . 3
4812160462 Service kit, 250 / 750h . . . 5
4812161677 Service kit, 250 / 750h Plus . . . 7
4812161678 Service kit, 500h . . . 9
4812161679 Service kit, 500h Plus . . . 11
4812161680 Service kit, 1000h . . . 13
4812161681 Service kit, 1000h Plus . . . 15
4812161683 Service kit, 2000h Plus . . . 17

Repair kits

4700938908 Eccentric shaft kit . . . 19
4700938892 Drum rotation kit . . . 20
4812162273 Shock absorber kit, drum . . . 21
4812162274 Scraper kit . . . 23

General - Keys and others

Keys . . . 24
Fuses . . . 26

Frame

Forks . . . 27
Scraper, fixed . . . 29
Spring loaded scraper (Front) . . . 31
Spring loaded scraper (Rear) . . . 33
Steering hitch . . . 35
Front frame . . . 37
Rear frame . . . 39
Sprinkler pump . . . 41

Drum

Drum . . . 43

Engine room

Engine module . . . 46
4812129621 Diesel engine, Kubota D1703-M-DI-E4B / Stage V (18,5 kW) . . . 48
Exhaust system . . . 50
Air cleaner . . . 52
Air hose . . . 54
Engine hood, cpl. . . . 56
Bracket . . . 58
Coupling . . . 60
Expansion tank . . . 62
Cooler . . . 64
Coolant hose module . . . 66
Fuel tank . . . 68
Fuel hoses . . . 70
Battery holder . . . 72
Fan . . . 74
Hydraulic oil tank . . . 76
Belt guard . . . 78
Bracket module . . . 80

Hydraulic system

Hydraulic, Cooler and fan . . . 82

Vibration system

Vibration system, external vibration valve - common . . . 84
Vibration system, external vibration valve - without acc valves . . . 87
4812125749_Hydraulic valve . . . 90

4812160957 Seal kit . . . 92
Vibration system, Accessorie valves . . . 94
Vibration, int vibvlv . . . 96
4812125795 Hydraulic motor . . . 98
Hydraulic pump module . . . 100
4812127310 Hydraulic pump . . . 102
Hydraulic pump module . . . 104
4812127309 Hydraulic pump . . . 106
4812125681_Hydraulic valve . . . 108

Propulsion system
Propulsion system . . . 110
4812126969 Hydraulic pump . . . 112
4812120558 Hydraulic motor . . . 114

Steering system
Steering system . . . 116
4812125395 Hydraulic cylinder . . . 118
Brake system . . . 120

Edge cutter (optional)
Edge cutter . . . 122
Hydraulic cylinder module . . . 124
4812125907 Hydraulic cylinder . . . 126
Flow divider . . . 128
Chip spreader (option) . . . 130
4812125682_Hydraulic valve . . . 132

Electrical equipment

Circuit board and fuses

Circuit board and fuses up to xA026340
Circuit board and fuses . . . 134

Circuit board and fuses From xA026341
Circuit board and fuses . . . 136
Backup alarm module . . . 138
Backup alarm, 87 db(A) (Option / Quacker) . . . 140

Cable harness - Main

Cable harness - Main up to xA026340
Cable harness . . . 142

Cable harness - Main From xA026341
Cable harness . . . 144
Cable harness - Quick release disconnector . . . 146
Cable harness - Battery disconnector . . . 148
Cable harness - Working lights incl. Rotating beacon . . . 150

Cable harness - Driving lights

Cable harness - Driving lights up to xA026340
Cable harness - Driving lights . . . 152

Cable harness - Driving lights From xA026341
Cable harness - Driving lights . . . 154
Cable harness - Flow divider . . . 156
Cable harness - Edge cutter, Chip spreader . . . 158
Cable harness - Seat heater . . . 160
Cable harness - Dual vibration . . . 161
Cable harness - Rotating beacon . . . 162
Cable harness - Working lights, Canopy Mounted . . . 164

Cable harness kit - double pole (option) . . . 166
Battery holder . . . See page 72
Driving lights (option) . . . 168
Driving lights, rear . . . 170
Working lights (option) . . . 171
Working light LED module . . . 172
Working light module S-LED . . . 174
Registration plate light . . . 176

Drivers platform
Platform . . . 179
Single lifting point . . . 181
Hand rail . . . 183

Control panel

Control panel Up to: xA026864
Control panel . . . 185

Control panel From: xA026865
Control panel . . . 187
Water tank . . . 189
Canopy . . . 191
ROPS . . . 193
Slideable seat . . . 195
Fixed seat . . . 197
Rear view mirror . . . 198
Throttle control . . . 200
Control module (1-button) - Right side . . . 202
4812130902 Control (1-button, single) . . . 204
Control module (Dual, 2-buttons) - Left side . . . 206
Control module (2-buttons) - Right side . . . 208
4812130903 Control (2-buttons) . . . 210
Controle module (3-buttons) - Right side . . . 212
4812130904 Control (3-buttons) . . . 214
Driver's seat, without armrests . . . 216
Comfort seat with heat module . . . 218
Comfort seat without heat module . . . 220
ECU module . . . 222
Cup and can holder . . . 223

Decals
Decals . . . 224
Decal kit, CC1200 VI . . . 227

Reflector module, Working lights

Reflector module, Working lights Up to: xA026864
Reflector module, Working lights . . . 229

Reflector module, Working lights From: xA026865
Reflector module, Working lights . . . 231
Reflector module, Driving lights . . . 233

Optional equipment
Edge cutter . . . 234
Cutting disc . . . 236
Pressing roller . . . 237
Hydraulic cylinder . . . 238
Chip spreader . . . 240
Fire extinguisher . . . 242
SMV-sign . . . 244
Dyn@Link GPS module . . . 245
GPS module . . . 247

4812013038 GPS module 248
Bracket (GPS) 249

Service kits 4812161674 Service kit, 50h

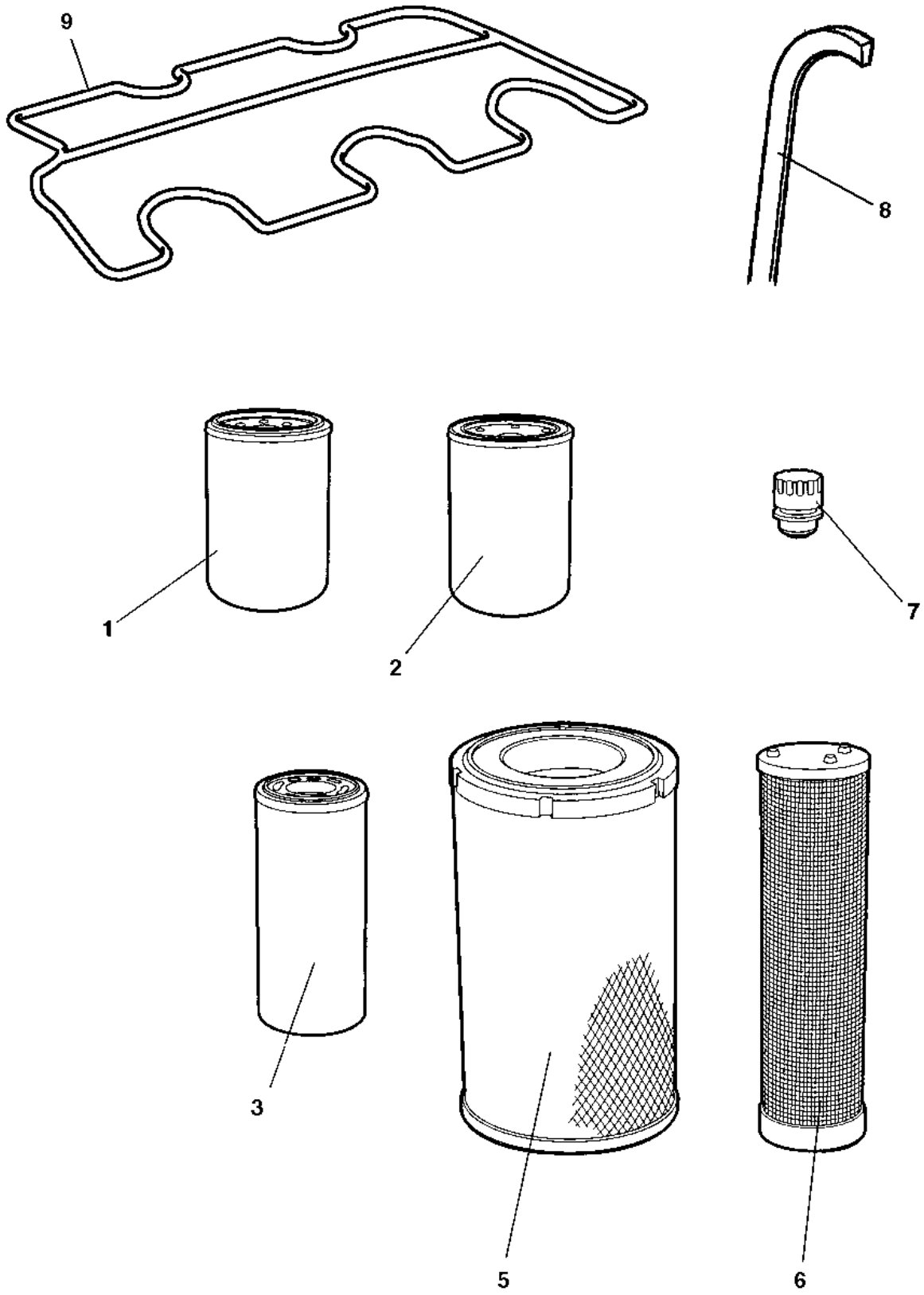

Item	Part No.	Name	Qty	L	C	SN INFO
0	4812161674	Service kit, 50h	1			
1	4812156259	Engine oil filter element	1			
2	4812113328	Hydraulic oil filter element	1			

Service kits 4812161675 Service kit, 50h Plus

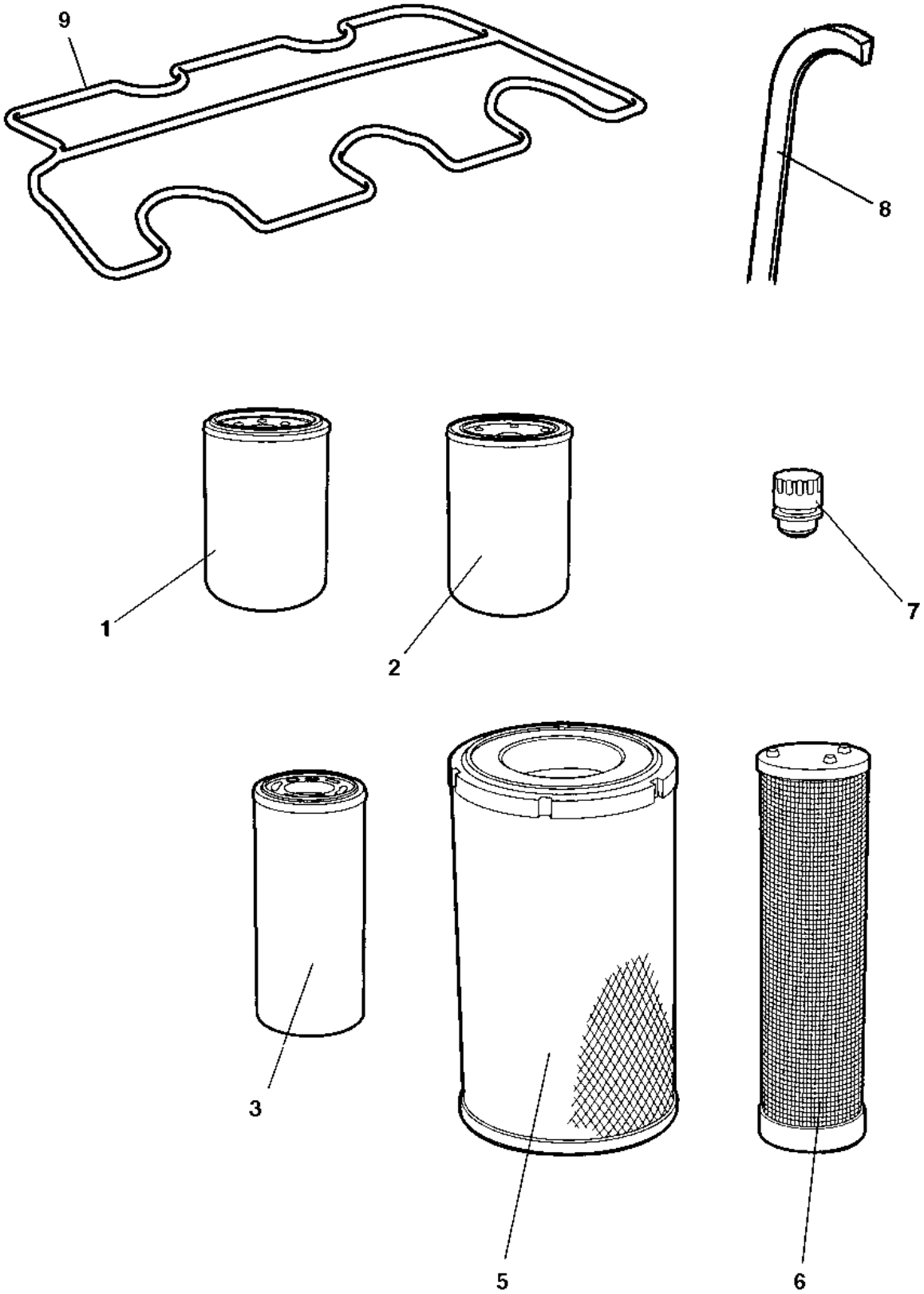

Item	Part No.	Name	Qty	L	C	SN INFO
0	4812161675	Service kit, 50h Plus	1			
1	4812156259	Engine oil filter element	1			
2	4812113328	Hydraulic oil filter element	1			
3	4812161855	Dynapac engine oil 200 / 5 ltrs.	2			
4	4812030096	Dynapac Roller Grease	1			

Service kits 4812160462 Service kit, 250 / 750h

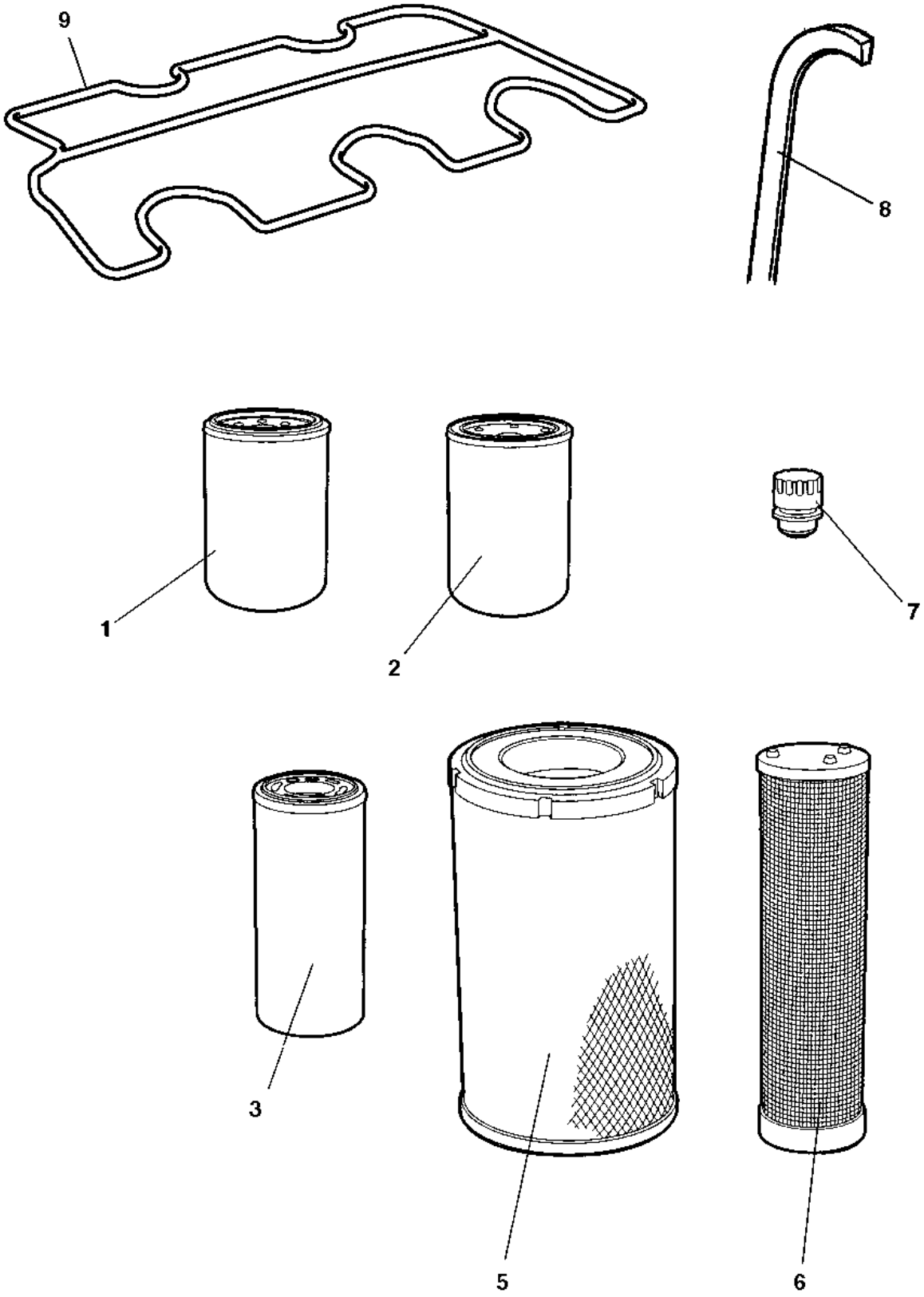

Item	Part No.	Name	Qty	L	C	SN INFO
0	4812160462	Service kit, 250 / 750h	1			
1	4812156259	Engine oil filter element	1			

Service kits 4812161677 Service kit, 250 / 750h Plus

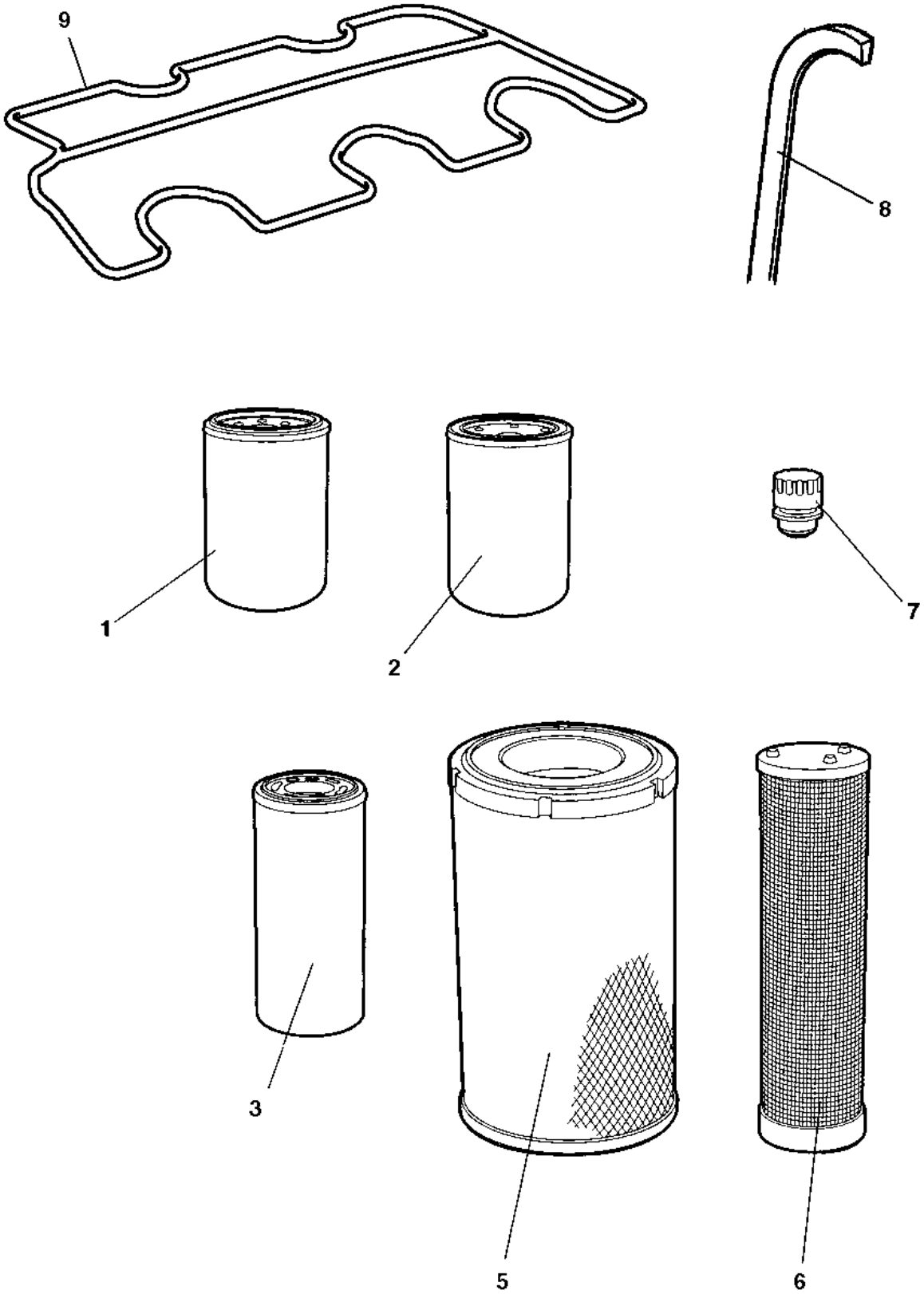

Item	Part No.	Name	Qty	L	C	SN INFO
0	4812161677	Service kit, 250 / 750h Plus	1			
1	4812156259	Engine oil filter element	1			
2	4812161855	Dynapac engine oil 200 / 5 ltrs.	2			

Service kits 4812161678 Service kit, 500h

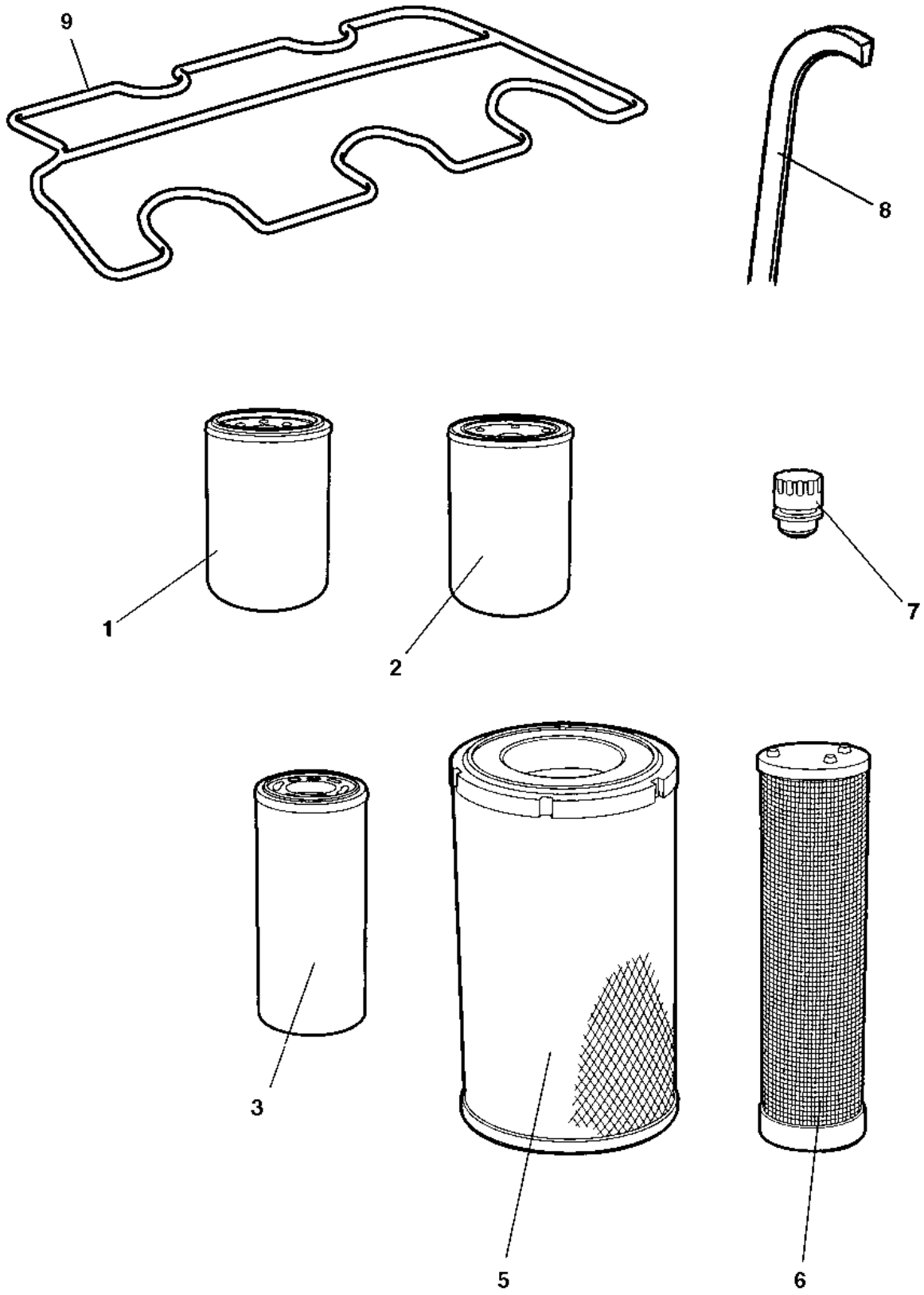

Item	Part No.	Name	Qty	L	C	SN INFO
0	4812161678	Service kit, 500h	1			
1	4812156259	Engine oil filter element	1			
2	4812156263	Fuel filter element	1			
3	4812156264	Pre-fuel filter element	1			
4	4812156260	V-belt	1			
5	4812161586	Air filter, main	1			

Service kits 4812161679 Service kit, 500h Plus

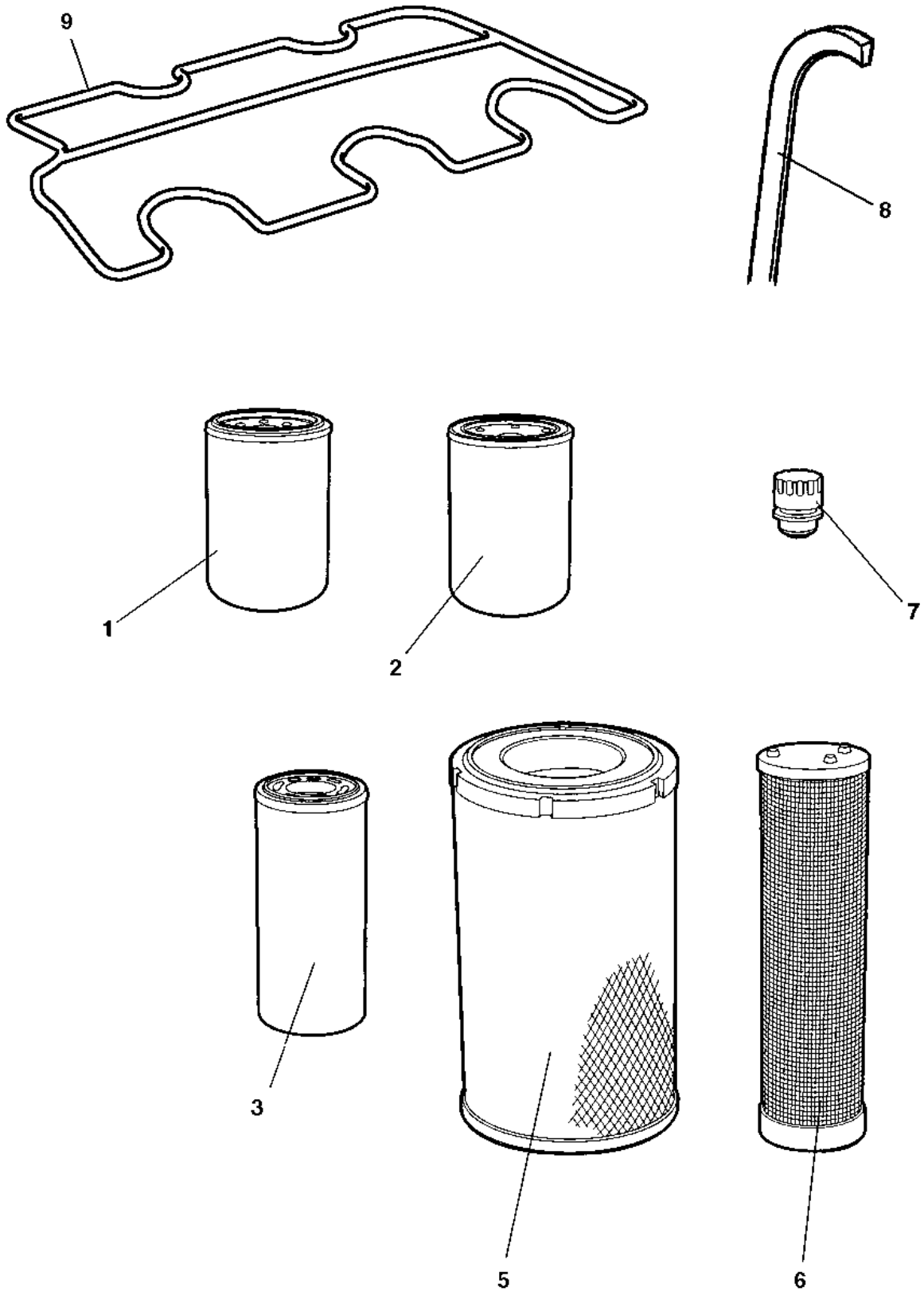

Item	Part No.	Name	Qty	L	C	SN INFO
0	4812161679	Service kit, 500h Plus	1			
1	4812156259	Engine oil filter element	1			
2	4812156263	Fuel filter element	1			
3	4812156264	Pre-fuel filter element	1			
4	4812156260	V-belt	1			
5	4812161586	Air filter, main	1			
6	4812161855	Dynapac engine oil 200 / 5 ltrs.	2			
7	4812030096	Dynapac Roller Grease	1			

Service kits 4812161680 Service kit, 1000h

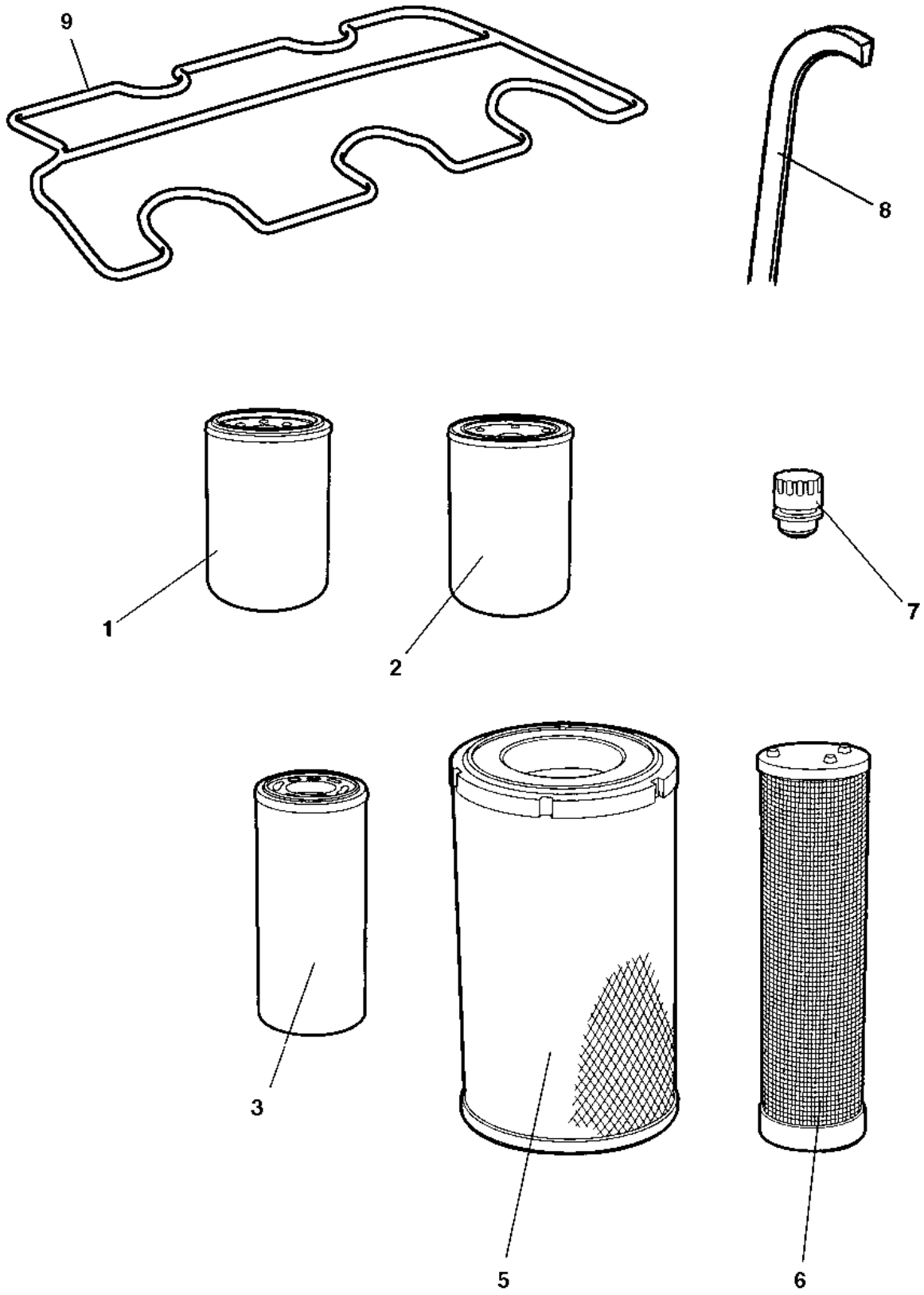

Item	Part No.	Name	Qty	L	C	SN INFO
0	4812161680	Service kit, 1000h	1			
1	4812156259	Engine oil filter element	1			
2	4812156263	Fuel filter element	1			
3	4812156264	Pre-fuel filter element	1			
4	4812113328	Hydraulic oil filter element	1			
5	4812161586	Air filter, main	1			
6	4812161587	Air filter element, Safety	1			
7	4700357138	Ventilating filter	1			
8	4812156260	V-belt	1			
9	4812156261	Valve cover gasket	1			

Service kits 4812161681 Service kit, 1000h Plus

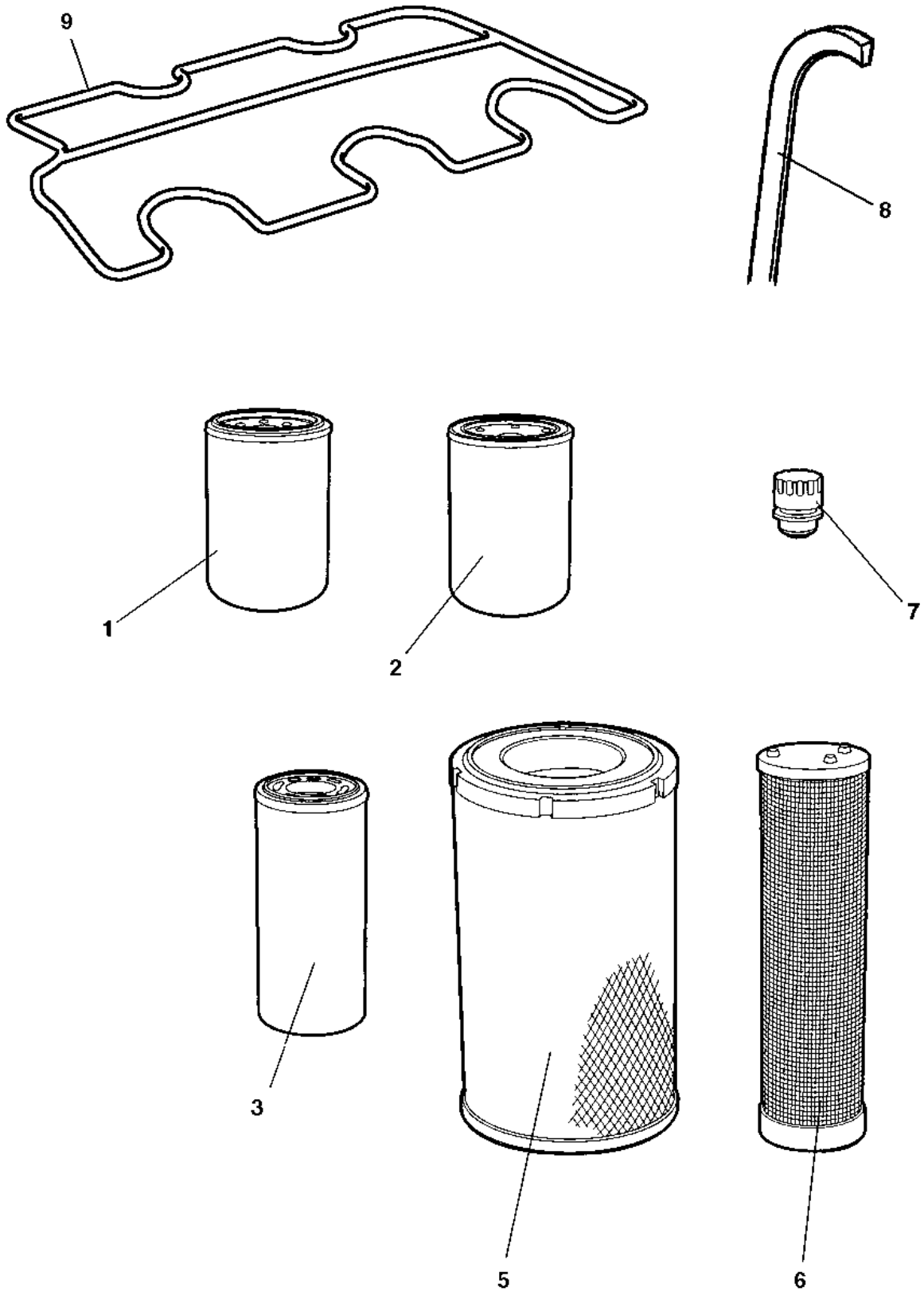

Item	Part No.	Name	Qty	L	C	SN INFO
0	4812161681	Service kit, 1000h Plus	1			
1	4812156259	Engine oil filter element	1			
2	4812156263	Fuel filter element	1			
3	4812156264	Pre-fuel filter element	1			
4	4812156260	V-belt	1			
5	4812113328	Hydraulic oil filter element	1			
6	4812161586	Air filter, main	1			
7	4812161587	Air filter element, Safety	1			
8	4812156261	Valve cover gasket	1			
9	4700357138	Ventilating filter	1			
10	4812161855	Dynapac engine oil 200 / 5 ltrs.	2			
11	4812030096	Dynapac Roller Grease	1			

Service kits 4812161683 Service kit, 2000h Plus

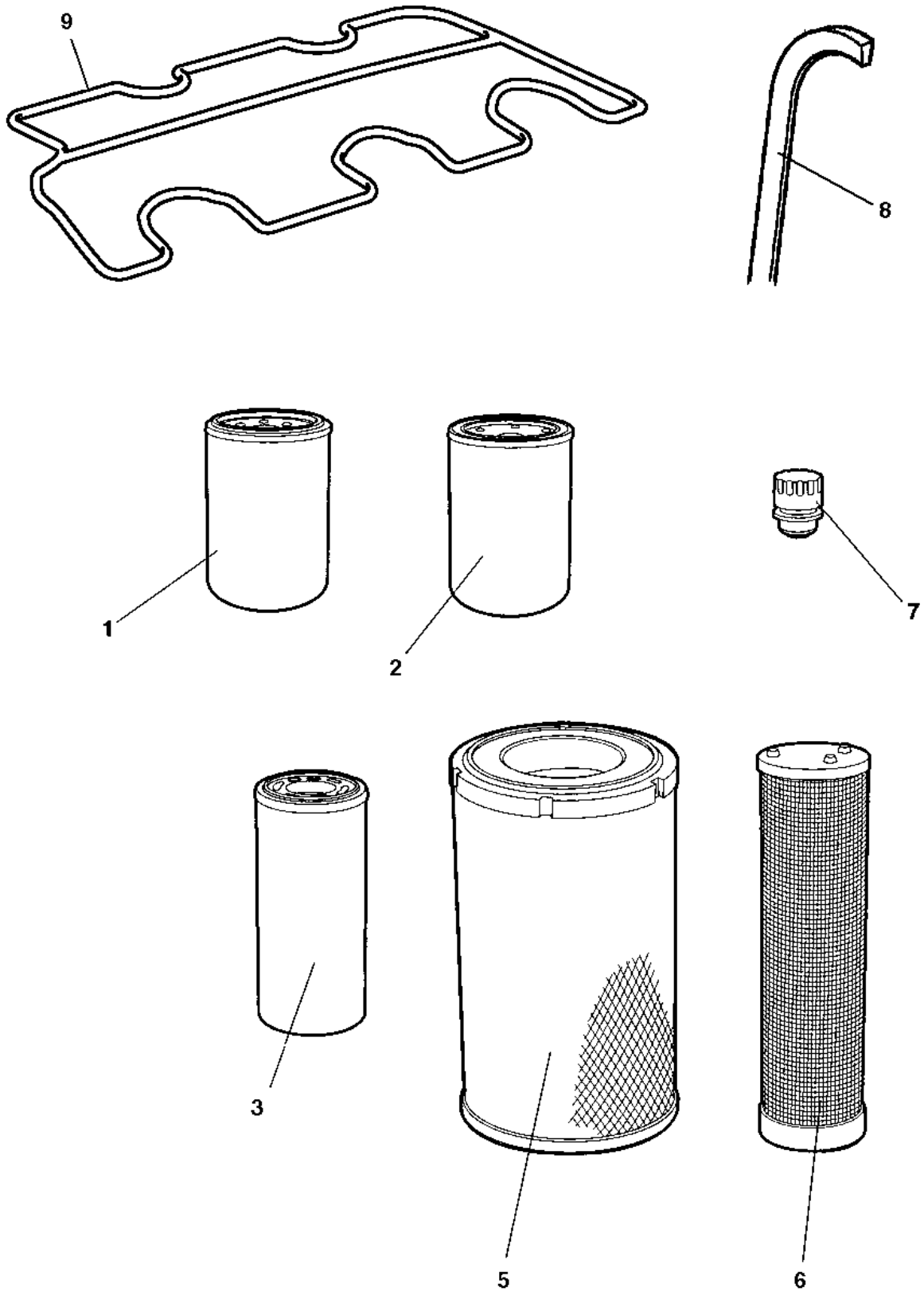

Item	Part No.	Name	Qty	L	C	SN INFO
0	4812161683	Service kit, 2000h Plus	1			
1	4812156259	Engine oil filter element	1			
2	4812156263	Fuel filter element	1			
3	4812156264	Pre-fuel filter element	1			
4	4812156260	V-belt	1			
5	4812113328	Hydraulic oil filter element	1			
6	4812161586	Air filter, main	1			
7	4812161587	Air filter element, Safety	1			
8	4812156261	Valve cover gasket	1			
9	4700357138	Ventilating filter	1			
10	4812161855	Dynapac engine oil 200 / 5 ltrs.	2			
11	4812030096	Dynapac Roller Grease	1			
12	4812161883	Dynapac Gear oil 300 / 5 ltrs.	1			
13	4812161868	Dynapac hydraulic 300 / 20 ltrs.	3			

Repair kits 4700938908 Eccentric shaft kit

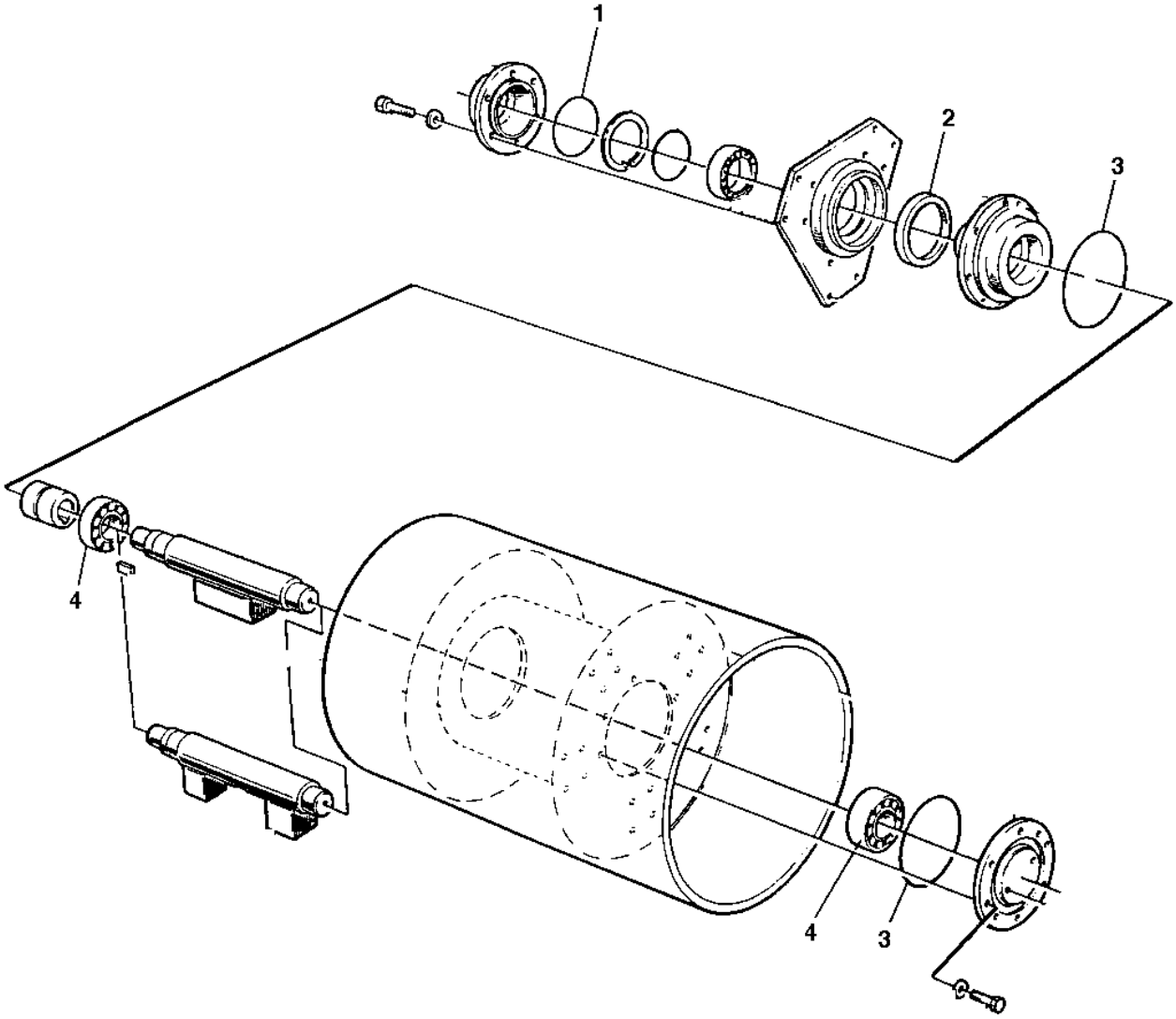

Item	Part No.	Name	Qty	L	C	SN INFO
0	4700938908	Eccentric shaft kit				
1	4700160132	O-ring 70	1			
2	4700163049	Radial lip-type seal	1			
3	4700923951	O-ring	2			
4	4700904258	Spherical roller bearing	2			

Repair kits 4700938892 Drum rotation kit

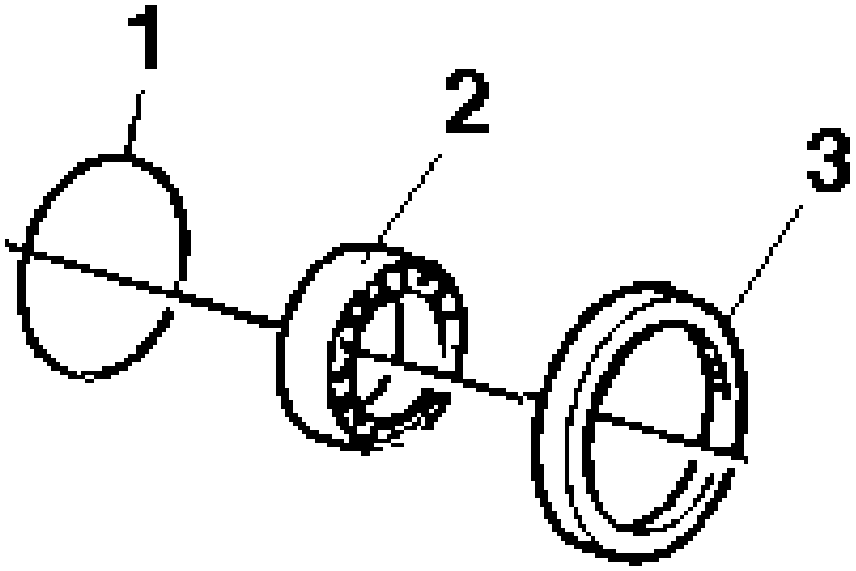

Item	Part No.	Name	Qty	L	C	SN INFO
0	4700938892	Drum rotation kit				
1	4700160132	O-ring 70	1			
2	4700111018	Ball bearing	1			
3	4700163049	Radial lip-type seal	1			

Repair kits 4812162273 Shock absorber kit, drum

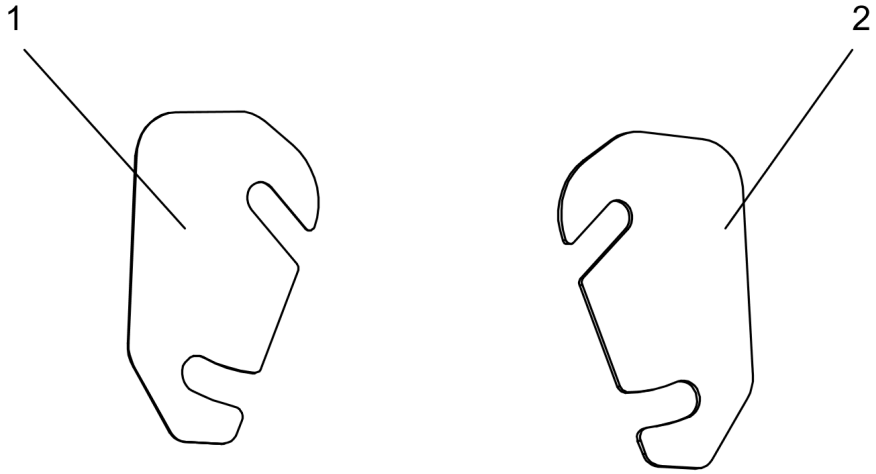

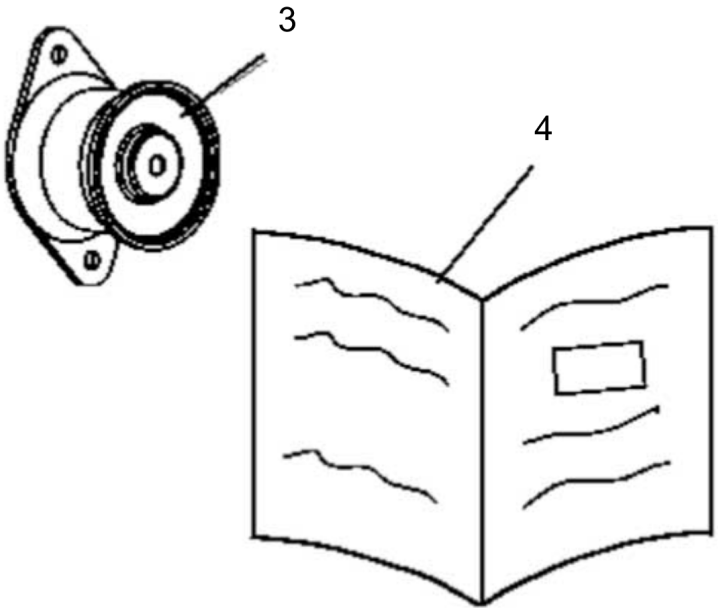

Item	Part No.	Name	Qty	L	C	SN INFO
0	4812162273	Shock absorber kit, drum				
1	4812126093	Shim	4			
2	4812126094	Shim	4			

Item	Part No.	Name	Qty	L	C	SN INFO
3	4700391984	Shock absorber	20			
4	4812156170	Instructions	1			

Repair kits 4812162274 Scraper kit

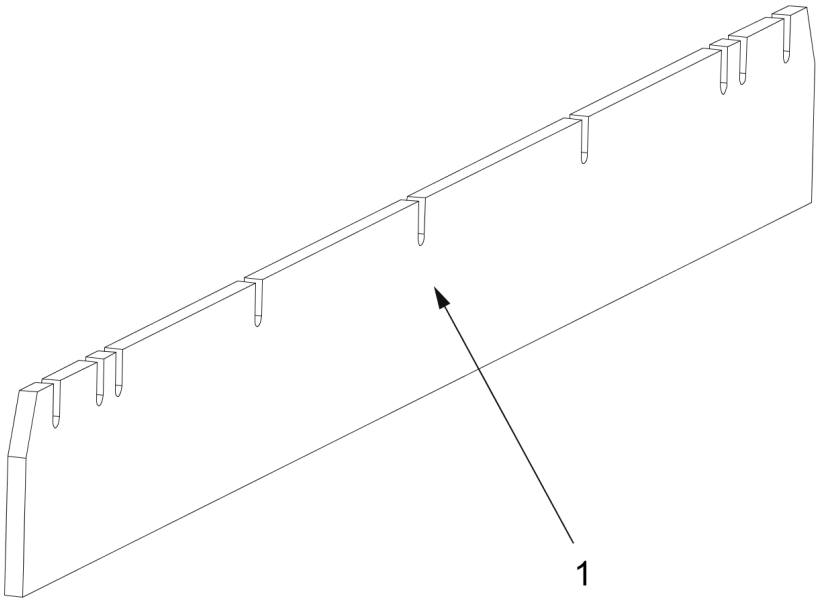

Item	Part No.	Name	Qty	L	C	SN INFO
0	4812162274	Scraper kit	1			
1	4812125422	Scraper blade	4			

General - Keys and others Keys

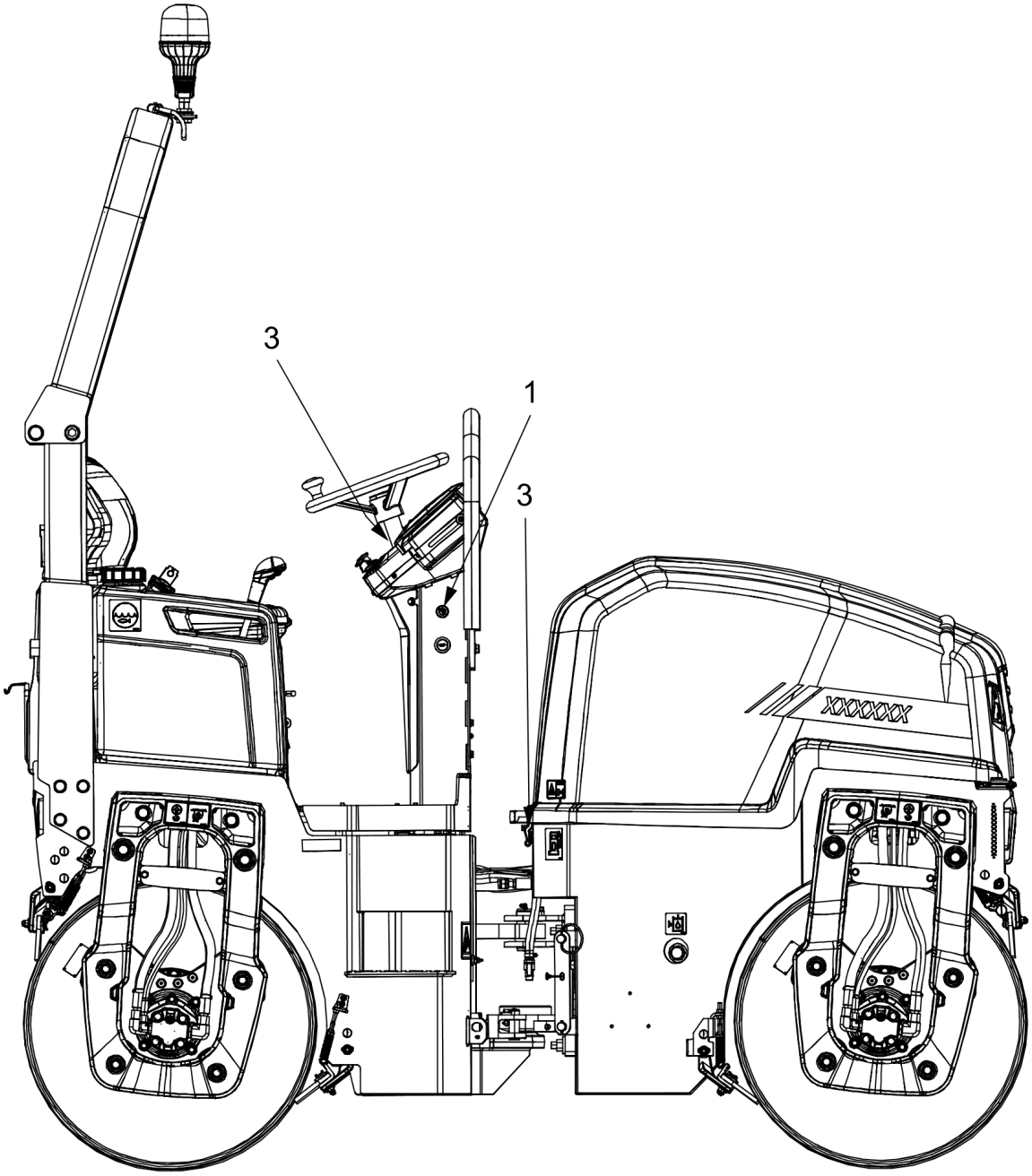

Item	Part No.	Name	Qty	L	C	SN INFO
1	4811000333	Ignition switch				
1	4700902866	Key "455"				
3	4700358881	Padlock				

Item	Part No.	Name	Qty	L	C	SN INFO
3	4812161396	Key				

General - Keys and others Fuses

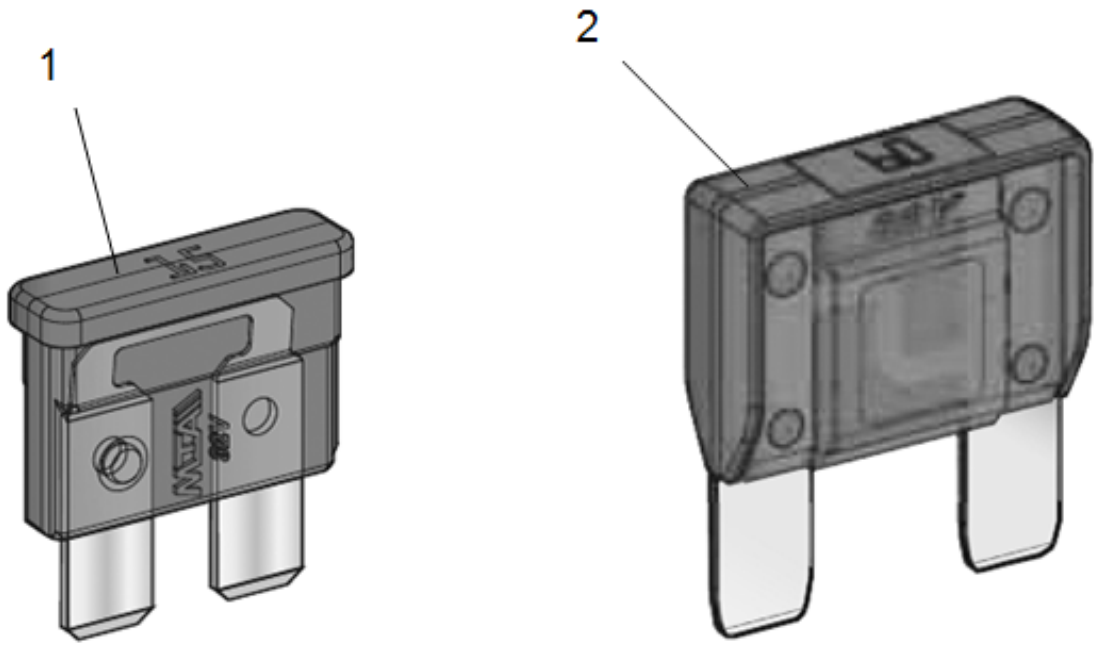

Item	Part No.	Name	Qty	L	C	SN INFO
1	-	Fuse, blade type Medium				
1	4700901224	Fuse, 3A Violet				
1	4700901225	Fuse 5A Tan				
1	4700901226	Fuse 7.5A Brown				
1	4700901227	Fuse 10A Red				
1	4700901228	Fuse 15A Blue				
1	4700903741	Fuse 20A Yellow				
1	4700901229	Fuse, 25A Natural				
1	4700901230	Fuse, 30A Green				
2	-	Fuse, blade typ High				
2	4700904294	Fuse 20A Yellow				
2	4700904037	Fuse 30A Green				
2	4700904038	Fuse 40A Orange				
2	4700904039	Fuse 50A Red				
2	4700904040	Fuse 60A Blue				
2	4700904041	Fuse 70A Tan				
2	4700904042	Fuse 80A Natural (White)				

Frame Forks

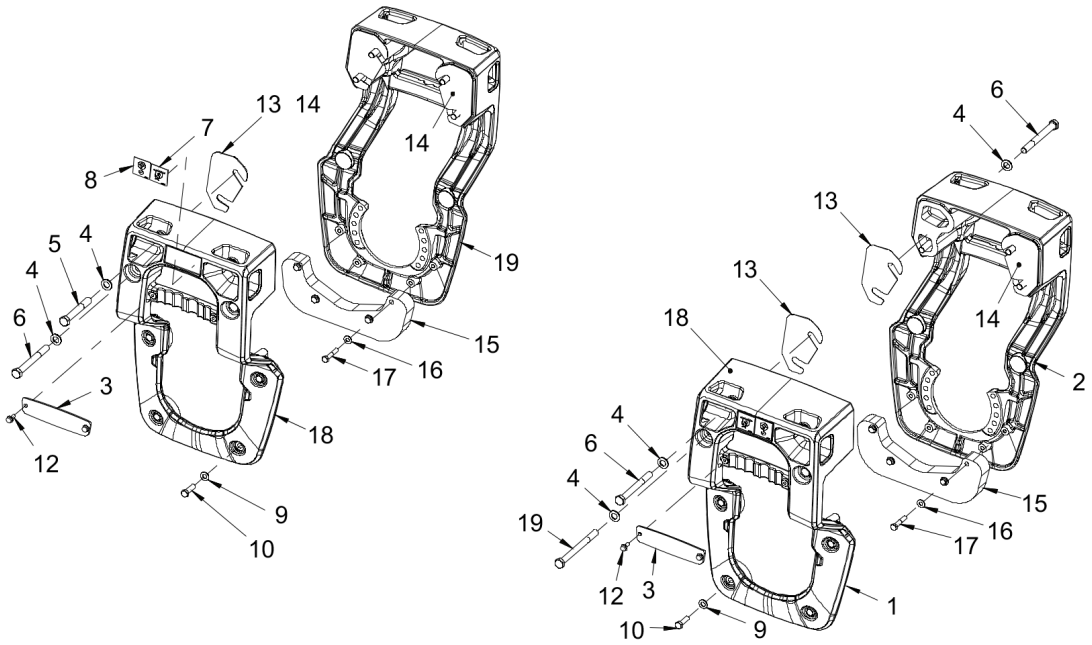

Item	Part No.	Name	Qty	L	C	SN INFO
1	4812125806	Fork	1			
2	4812125816	Fork	1			
3	4812125471	Cover plate	4			

Item	Part No.	Name	Qty	L	C	SN INFO
4	4700904232	Washer 15x30x4 300 HV	16			
5	4700500142	Screw	4			
6	4700500164	Screw M16-2,0x150 8,8	8			
7	4700382751	Decal "SECURING POINT/TIE DOWN"	4			
8	4700357587	Label lifting point	4			
9	4700904231	Steel plain washer	8			
10	4812125739	Hexagon Head Screw, M12x40H, 10.9, Geomet	8			
12	4700500505	Hexagon screw M8X20 8.8 A2K	8			
13	4812126093	Shim	N			
14	4812126094	Shim	N			
15	4812127737	Weight	2			
16	4700904230	Plain washer M10 10.5X22X2.0	8			
17	4700500032	Hexagon Screw M	8			
18	4812125805	Fork	1			
19	4812125815	Fork	1			
20	4700500085	Screw	4			

Frame Scraper, fixed

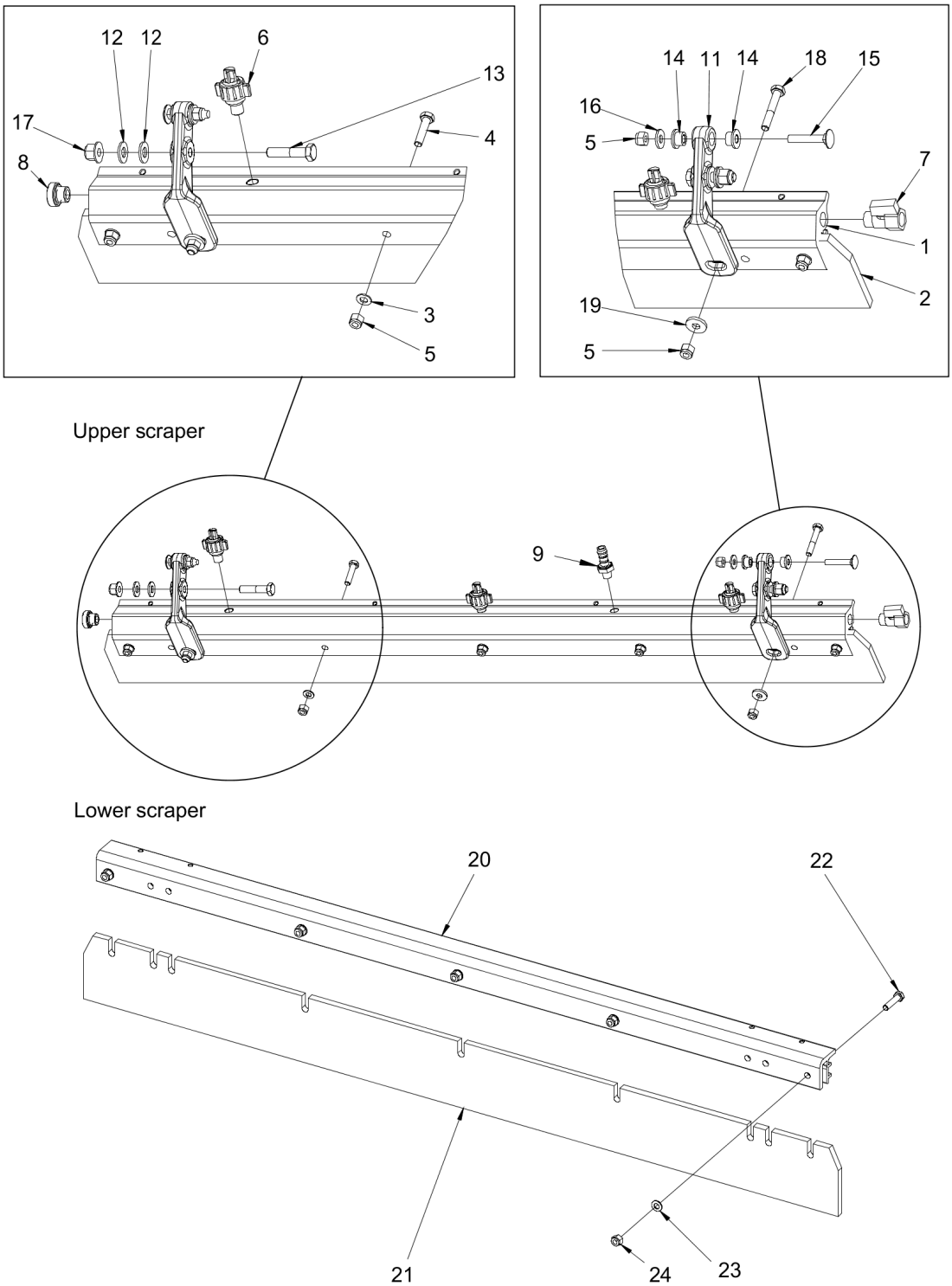

Item	Part No.	Name	Qty	L	C	SN INFO
1	4812125418	Sprinkler pipe	1			
2	4812125422	Scraper blade	1			
3	4700904229	Steel plain washer 8.4X16X1.5	5			

Item	Part No.	Name	Qty	L	C	SN INFO
4	4700500230	Hexagon head screw M	5			
5	4700586003	Lock nut M8	13			
6	4812124321	Spraying nozzle	3			
6-1	4812124324	Strainer	1			
6-2	4812124325	Gasket	1			
6-3	4812124327	Nozzle, yellow 0.8	1			
-	4812124328	Nozzle, blue 1.0	1			
-	4812124329	Nozzle, red 1.2	1			
-	4812124330	Nozzle, brown 1.3	1			
6-4	4700160268	O-ring	1			
6-5	4812124323	Cap, blue	1			
7	4700233215	Ball valve	1			
8	4700792072	End plug	1			
9	4700901432	Hose connection	1			
11	4812121858	Bracket	4			
12	4700791938	Washer	8			
13	4700500105	Hex. screw	4			
14	4700791939	Bushing	8			
15	4700791775	Bolt	4			
16	4700791304	Steel plain washer	4			
17	4700902287	Nut, M10	4			
18	4700500025	Screw	4			
19	4700904640	Steel plain washer	4			
20	4812125424	Sprinkler pipe	1			
21	4812125422	Scraper blade	1			
22	4700500230	Hexagon head screw M	5			
23	4700904229	Steel plain washer 8.4X16X1.5	5			
24	4700586003	Lock nut M8	5			

Frame Spring loaded scraper (Front)

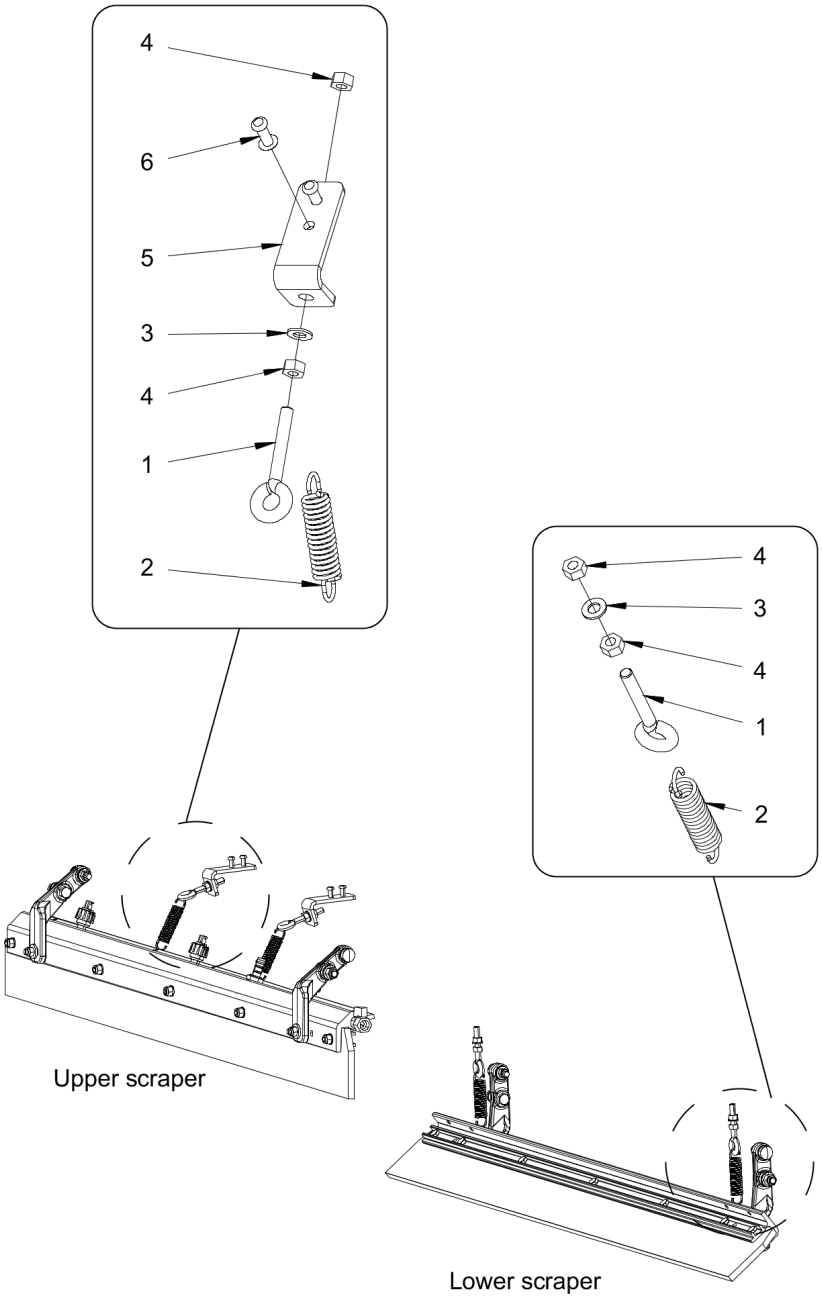

Item	Part No.	Name	Qty	L	C	SN INFO
1	4700792189	Eye bolt	4			
2	4700359043	Spring	4			
3	4700904229	Steel plain washer 8.4X16X1.5	4			

Item	Part No.	Name	Qty	L	C	SN INFO
4	4700570005	Hexagon nut M	8			
5	4812126891	Bracket	2			
6	4700791666	Blind rivet	4			

Frame Spring loaded scraper (Rear)

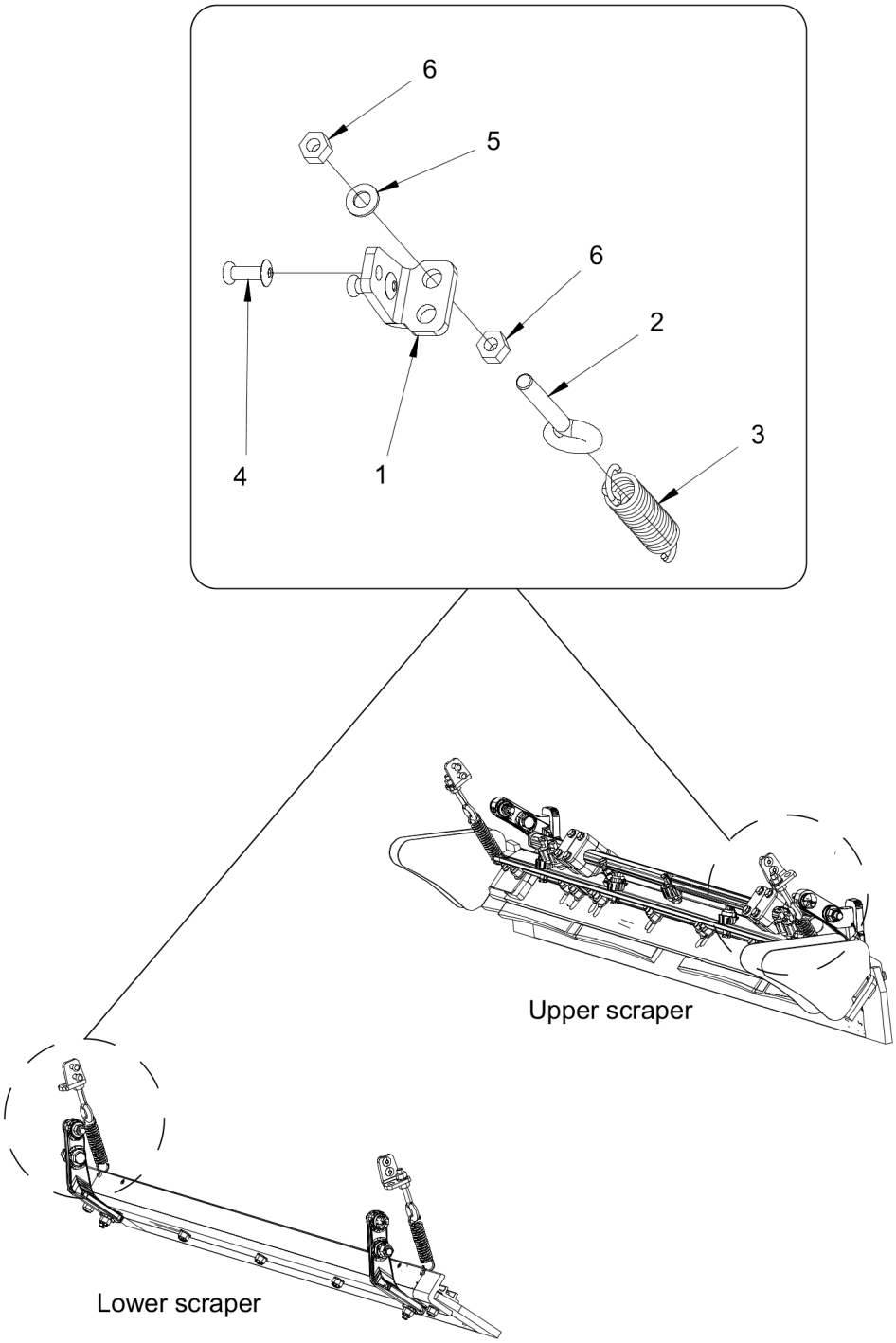

Item	Part No.	Name	Qty	L	C	SN INFO
1	4812126984	Bracket	4			
2	4700792189	Eye bolt	4			
3	4700359043	Spring	4			

Item	Part No.	Name	Qty	L	C	SN INFO
4	4700791666	Blind rivet	8			
5	4700904229	Steel plain washer 8.4X16X1.5	4			
6	4700570005	Hexagon nut M	8			

Frame Steering hitch

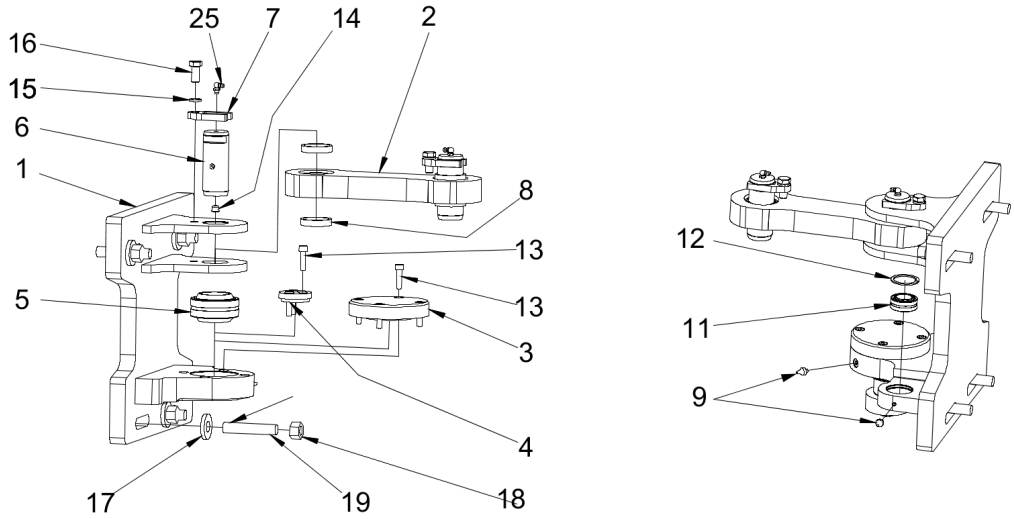

Item	Part No.	Name	Qty	L	C	SN INFO
1	4812125132	Articulated joint plate	1			
2	4812125133	Bearing unit	1			
3	4812125136	Bearing cap	1			

Item	Part No.	Name	Qty	L	C	SN INFO
4	4812125137	Cover cap	1			
5	4812125392	Bearing	1			
6	4812125398	Shaft	2			
7	4812125399	Washer	2			
8	4812128394	Spacer sleeve	2			
9	4700926214	Lubrication nipple	4			
11	4812125414	Bearing	1			
12	4700151012	Retaining ring	1			
13	4700508048	Hexagon socket head cap screw M	6			
14	4700792083	Protective plug	2			
15	4700900994	Lock washer	2			
16	4700500051	Hexagon screw M	2			
17	0300027623	Plain washer	4			
18	4700570008	Hex. nut	4			
19	4812125416	Stud	4			
25	0544110011	Lubricant nipple	2			

Frame Front frame

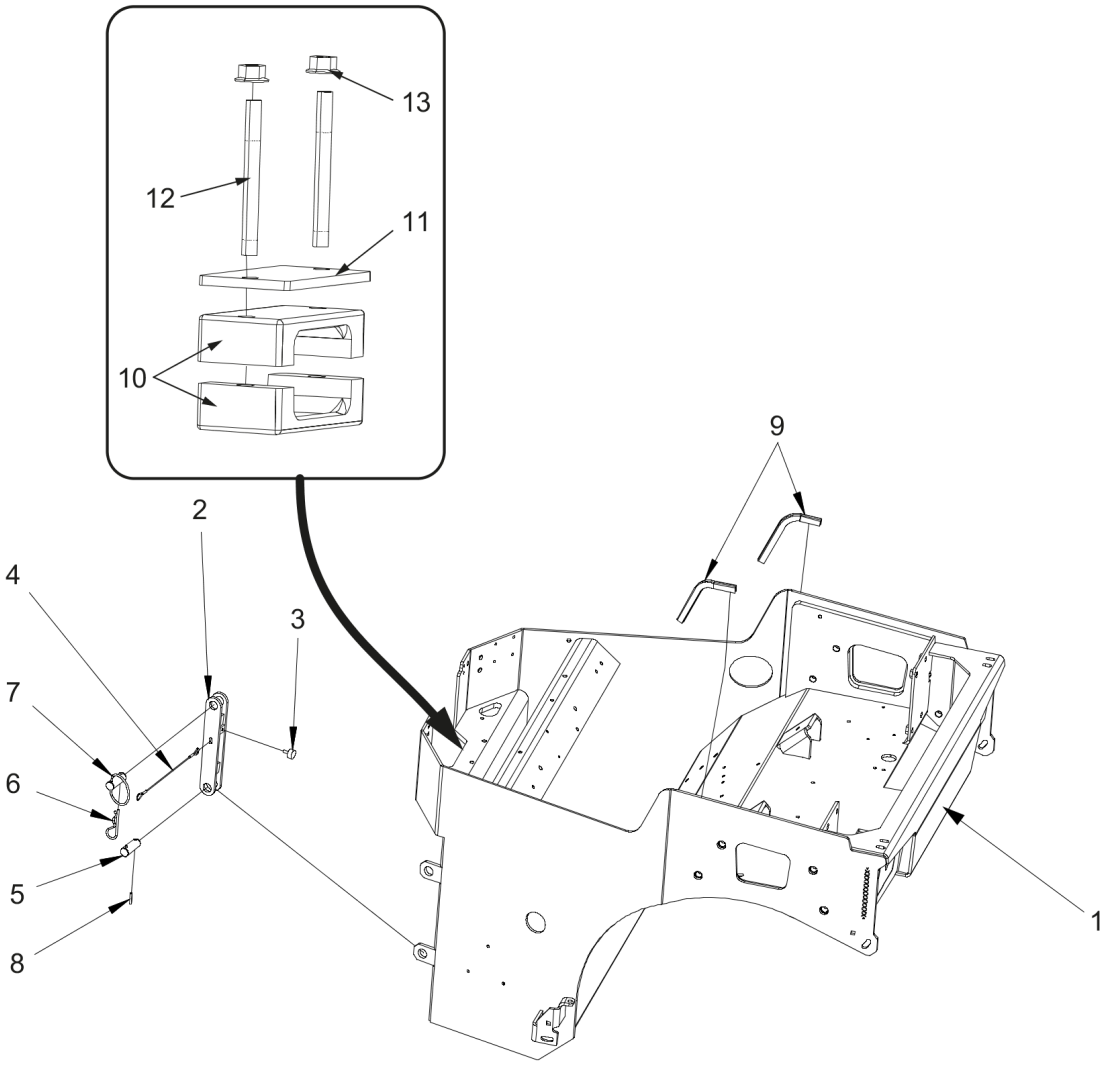

Item	Part No.	Name	Qty	L	C	SN INFO
1	4812125563	Front frame	1			
2	4812126081	Articulated joint lock	1			
3	4700792607	Shock absorber	1			

Item	Part No.	Name	Qty	L	C	SN INFO
4	4700343775	Plastic insulation steel wire	1			
5	4812126082	Shaft	2			
6	4700635061	Locking clip	1			
7	4700357488	Spring	1			
8	4700629016	Expanding	2			
9	4700902379	Edge trim	2			
10	4700343732	Hose clamp	2			
11	4700335914	Cover plate	1			
12	4700904629	Stud	2			
13	4700792817	Hexagon nut with flange	2			

Frame Rear frame

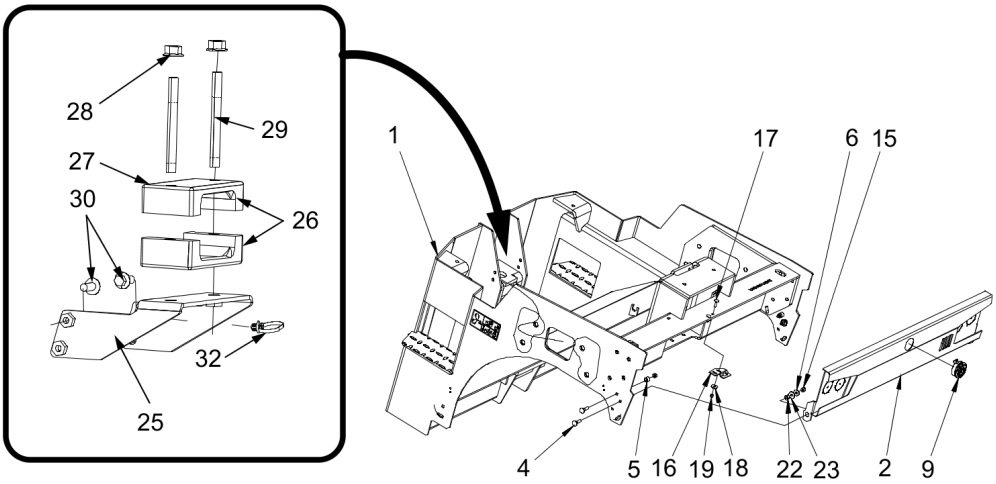

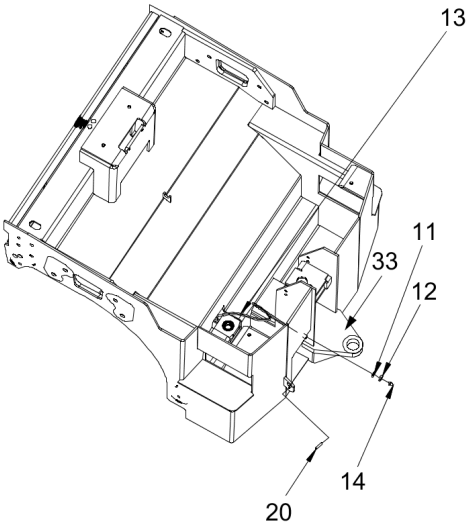

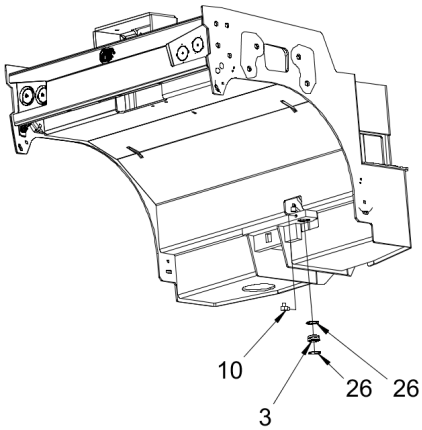

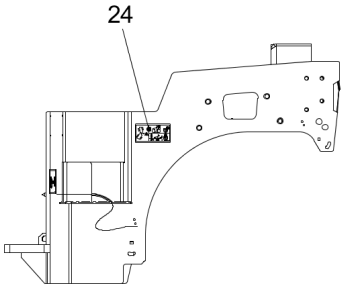

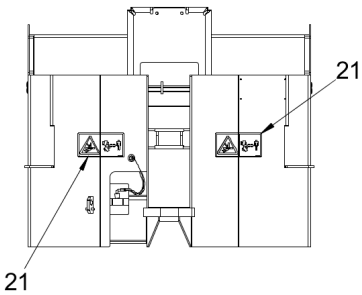

Item	Part No.	Name	Qty	L	C	SN INFO
1	4812125592	Rear frame	1			
2	4812125976	Cover	1			
3	4812125414	Bearing	1			

Item	Part No.	Name	Qty	L	C	SN INFO
4	4812117106	Cup square neck bolt	4			
5	4700371728	Spacer sleeve	2			
6	4700904640	Steel plain washer	2			
9	4812125978	Latch	1			
10	4700373183	Elbow 90°	1			
11	4700904231	Steel plain washer	1			
12	4700903831	Hexagon nut	1			
13	4812117733	Hydraulic hose	1			
14	4700926214	Lubrication nipple	1			
15	4700586003	Lock nut M8	4			
16	4812126012	Lock fittings	1			
17	4700903923	Cup square neck bolt	2			
18	4700904735	Steel plain washer	2			
19	4700586002	Lock nut M	2			
20	4700629024	Pin	1			
21	4700903422	Safety decal "HAZARDOUS AREA"	2			
22	4812126957	Spacer sleeve	2			
23	4700903662	Washer	2			
24	4812125363	Safety decal "RISK OF CRUSHING"	1			
25	4812125468	Bracket	1			
26	4700343732	Hose clamp	2			
27	4700335914	Cover plate	1			
28	4700904629	Stud	2			
29	4700792817	Hexagon nut with flange	2			
30	4700500505	Hexagon screw M8X20 8.8 A2K	4			
31	4700151012	Retaining ring	2			
32	4700792602	Cable Tie with Holder, Nylon Black	1			
33	4812127074	Bracket	1			

Frame Sprinkler pump

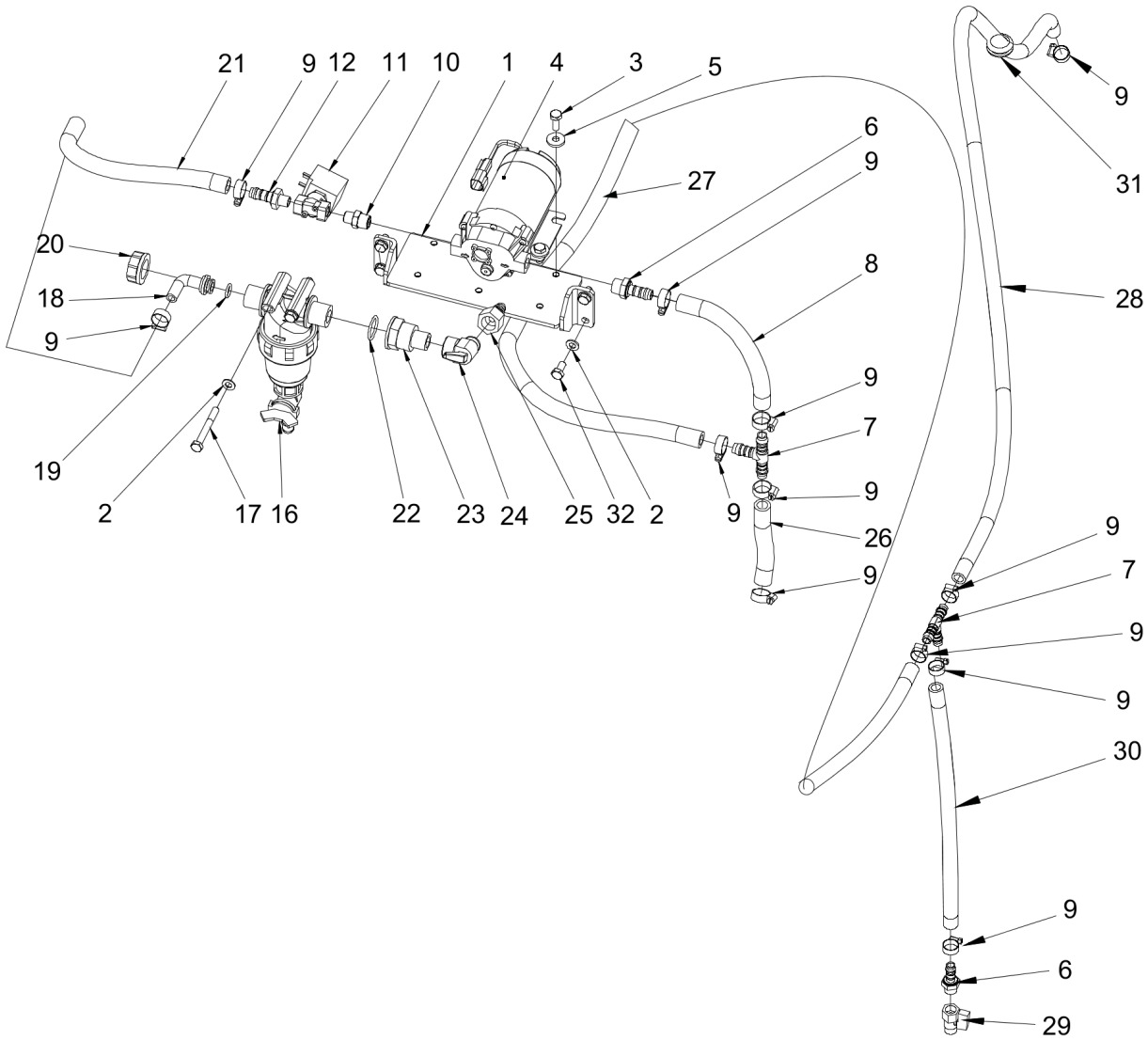

Item	Part No.	Name	Qty	L	C	SN INFO
1	4812125973	Bracket	1			
2	4700904229	Steel plain washer 8.4X16X1.5	6			
3	4700500053	Screw, M8x20 mm 8.8 A2K	4			

Item	Part No.	Name	Qty	L	C	SN INFO
4	4812125871	Sprinkler pump	1			
5	4700904640	Steel plain washer	4			
6	4700234931	Adapter	2			
7	4700923735	Hose connection	2			
8	4812112074	Plastic hose (x m)	0,17			
9	4700313002	Hose clamp	12			
10	4700377611	Straight connector	1			
11	4700287713	Solenoid valve	1			
12	4700901432	Hose connection	1			
16	4812111325	Water filter	1			
17	4700500068	Hexagon head screw M	2			
18	4812111330	Hose connection	1			
19	4700480852	O-ring 70	1			
20	4700792779	Swivel nut	1			
21	4812112074	Plastic hose (x m)	0,27			
22	4700160313	O-ring 70	1			
23	4812111331	Reducer nipple	1			
24	4812126907	Ball valve	1			
25	4812112451	Hose connection	1			
26	4812112074	Plastic hose (x m)	0,14			
27	4812112074	Plastic hose (x m)	1,41			
28	4812112074	Plastic hose (x m)	1,31			
29	4700233215	Ball valve	1			
30	4812112074	Plastic hose (x m)	0,43			
31	4700903192	Grommet	1			
31	4812119127	Grommet with membrane	1	A = Interchangeable together with 4812125563 only		
32	4700500019	Hexagon head screw M	4			

Comments for Page: Sprinkler pump

(L)OCAL REMARKS

A | Interchangeable together with 4812125563 only

Drum Drum

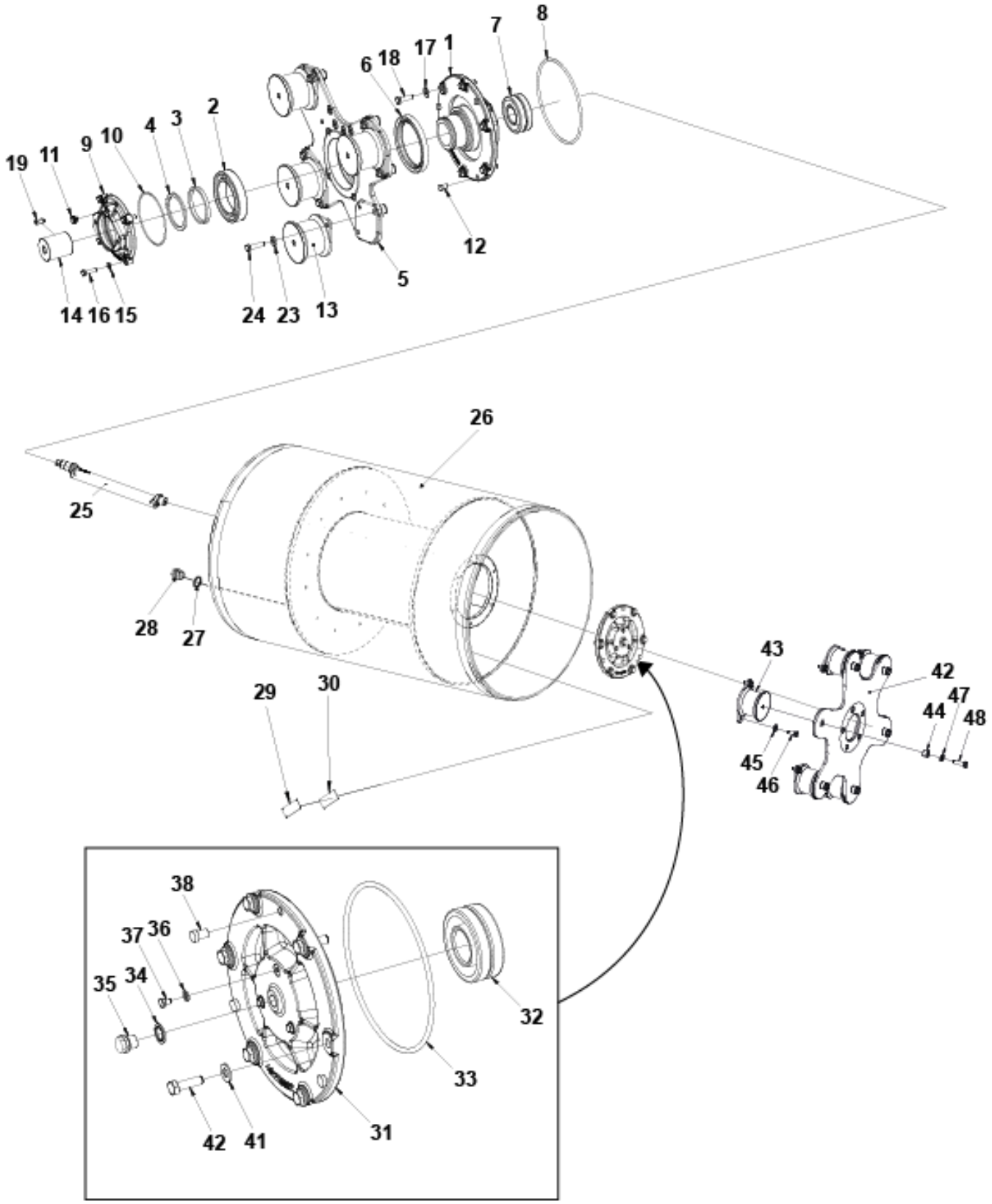
8
7
1
17
18
6
2
3
4
10
9
11
19
12
5
13
23
24
15
16
14
26
25
28
27
29
30
43
42
47
44
48
45
46
38
37
36
34
35
32
33
31
41
42

Item	Part No.	Name	Qty	L	C	SN INFO
1	4812126595	Bearing housing	1			
2	4700111018	Ball bearing	1			
3	4700358689	Spacer ring	1			
4	4700903154	Retaining ring	1			
5	4812124899	Bearing housing	1			
6	4700163049	Radial lip-type seal	1			
7	4700904258	Spherical roller bearing	1			
8	4700923951	O-ring	1			
9	4812124904	Adapter	1			
10	4700160132	O-ring 70	1			
11	4700343490	Air breather	1			
12	4700903287	Plug	3			
13	4700391984	Shock absorber	4			
14	4700349202	Coupling	1			
15	4700904229	Steel plain washer 8.4X16X1.5	4			
16	4700500022	Hexagon screw M8X30 8.8 A2K	4			
17	4700904230	Plain washer M10 10.5X22X2.0	6			
18	4700500030	Hexagon screw M	6			
19	4700350029	Feather key	1			
23	4700904557	Steel plain washer	8			
24	4812110596	Hexagon head screw M10x40 10,9 A3K	8			
25	4812119822	Eccentric shaft	1			
26	4812124792	Drum	1			
27	4700162017	Seal ring	1			
28	4700343744	Magnetic plug	1			
29	4700343801	Serial Number plate	1			
30		Tape	1			
31	4812127097	Bearing housing	1			
32	4700904258	Spherical roller bearing	1			
33	4700923951	O-ring	1			
34	4700162011	Washer, 16.7x24x1.5 mm Type A M16	1			
35	4700232143	Plug, M16	1			
36	4700904228	Steel plain washer	3			
37	4700500044	Screw M6x8	3			
38	4700903287	Plug	3			
40	4700904230	Plain washer M10 10.5X22X2.0	6			
41	4700500030	Hexagon screw M	6			
42	4812127697	Drive disc	1			

Item	Part No.	Name	Qty	L	C	SN INFO
43	4700391984	Shock absorber	6			
44	4812110346	Spacer	6			
45	4700904557	Steel plain washer	12			
46	4812110663	Hexagon head screw M10x25H 10,9 A3K	12			
47	4700904231	Steel plain washer	6			
48	4812125739	Hexagon Head Screw, M12x40H, 10.9, Geomet	6			

Engine room Engine module

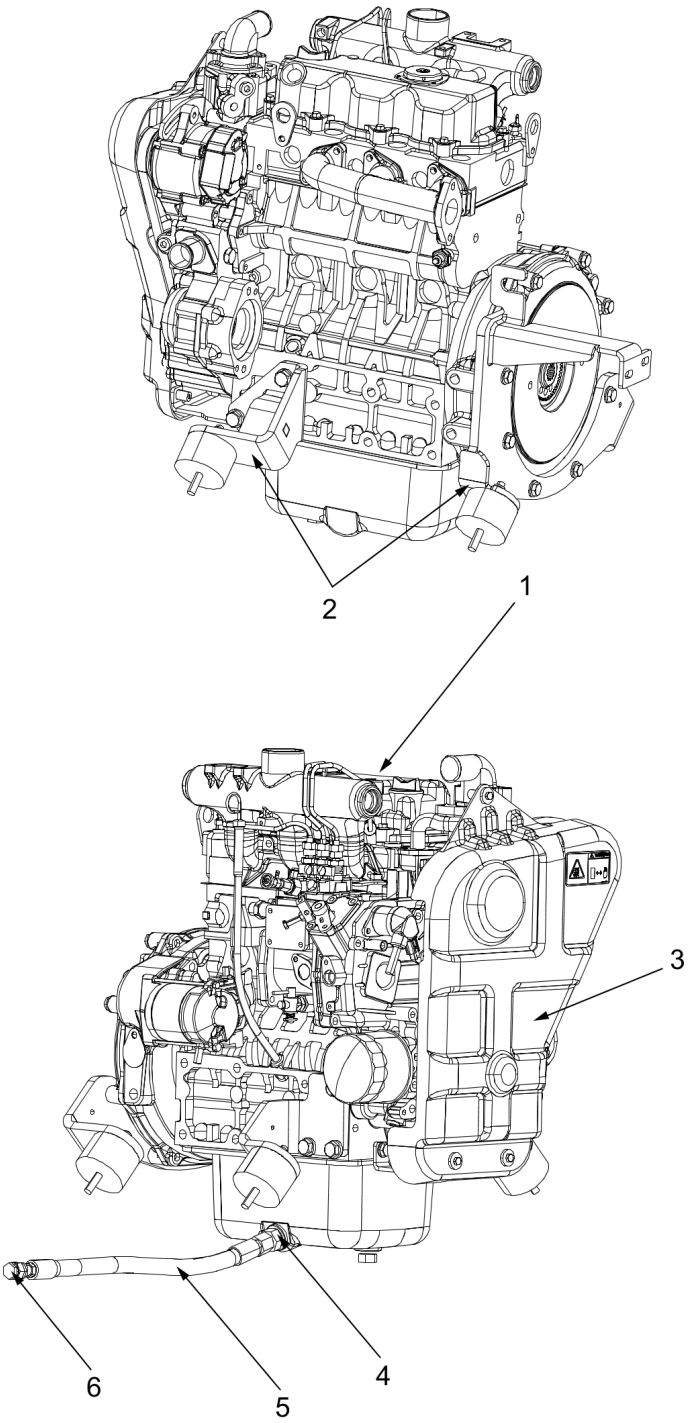

Item	Part No.	Name	Qty	L	C	SN INFO
1	4812129621	Diesel engine, Kubota D1703-DI-E4B (18,5 kW)	1			
2	-	Bracket module	1			
3	-	Belt guard module	1			

Item	Part No.	Name	Qty	L	C	SN INFO
4	4700791635	Straight connector	1			
5	4812125854	Hydraulic hose	1			
6	4700791493	Steel plug threaded	1			

Engine room 4812129621 Diesel engine, Kubota D1703-M-DI-E4B / Stage V (18,5 kW)

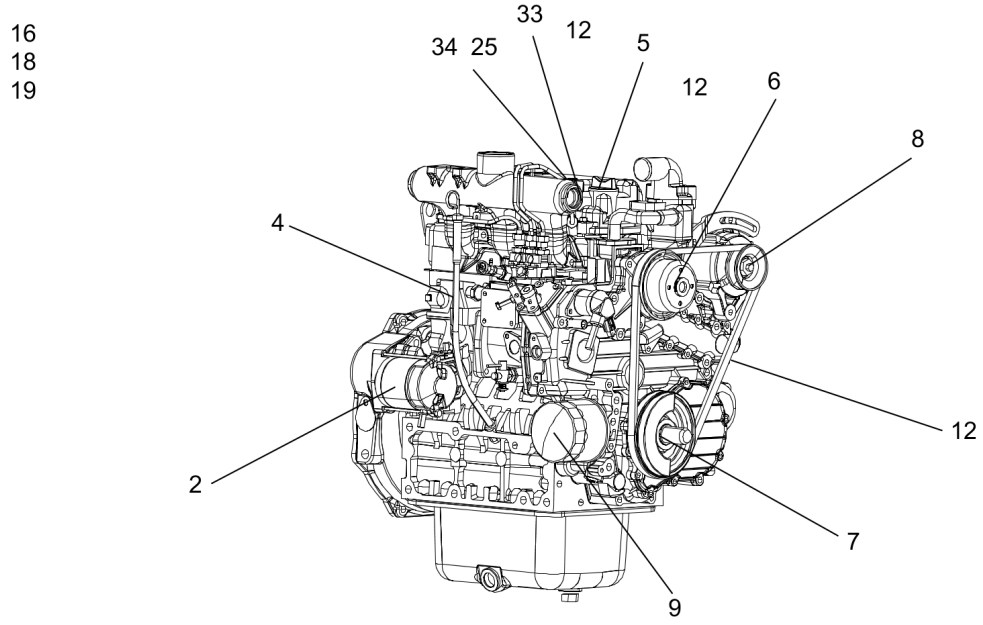

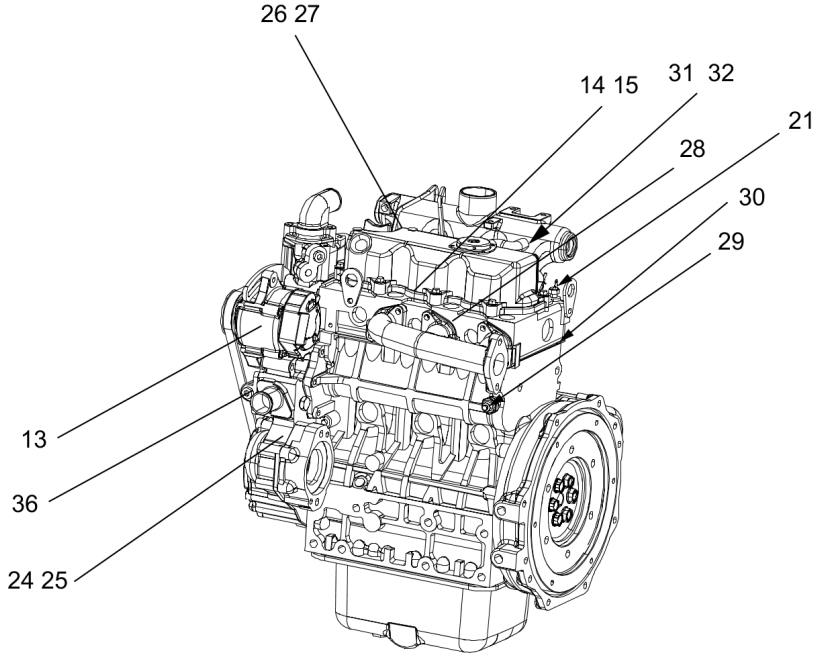

Item	Part No.	Name	Qty	L	C	SN INFO
0	4812129621	Diesel engine, Kubota D1703-DI-E4B (18,5 kW)	1			
2	4812162664	Starter, cpl.	1			
4	4812162665	Oil dip stick	1			

Item	Part No.	Name	Qty	L	C	SN INFO
5	4812156358	Oil cap	1			
5	4812156359	O-ring	1			
6	4812156360	Pulley, Fan	1			
7	4812156362	Alternator, Fan	1			
8	4812162666	Pulley, Alternator	1			
9	4812156259	Engine oil filter element	1			
12	4812156260	V-belt	1			
13	4812162669	Alternator	1			
14	4812156261	Valve cover gasket	1			
15	-	Piston ring set	1			
16	4812156389	Fuel pump	1			
17	-	Fuel solenoid	1			
18	4812156264	Pre-fuel filter element	1			
19	-	Pre-fuel filter element	1			
20	4812156263	Fuel filter element	1			
21	-	Thermostat	1			
22	4812161181	Gasket, thermostat	1			
23	4812161182	Gasket, flange water	1			
24	4812162670	Water pump	1			
25	4812161180	Gasket, water pump	1			
26	4812162671	Gasket, inlet manifold	1			
28	4812162668	Gasket, exhaust manifold	1			
29	4812161257	Oil pressure switch	1			
30	4812162676	Cylinder head gasket	1			
31	4812162674	Guide, valve inlet	3			
32	4812162675	Guide, Exhaust valve	3			
33	4812162679	Seal, Valve stem	6			
34	-	Valve, inlet	3			
35	-	Valve, exhaust	3			
36	4812162673	Plug	1			

Engine room Exhaust system

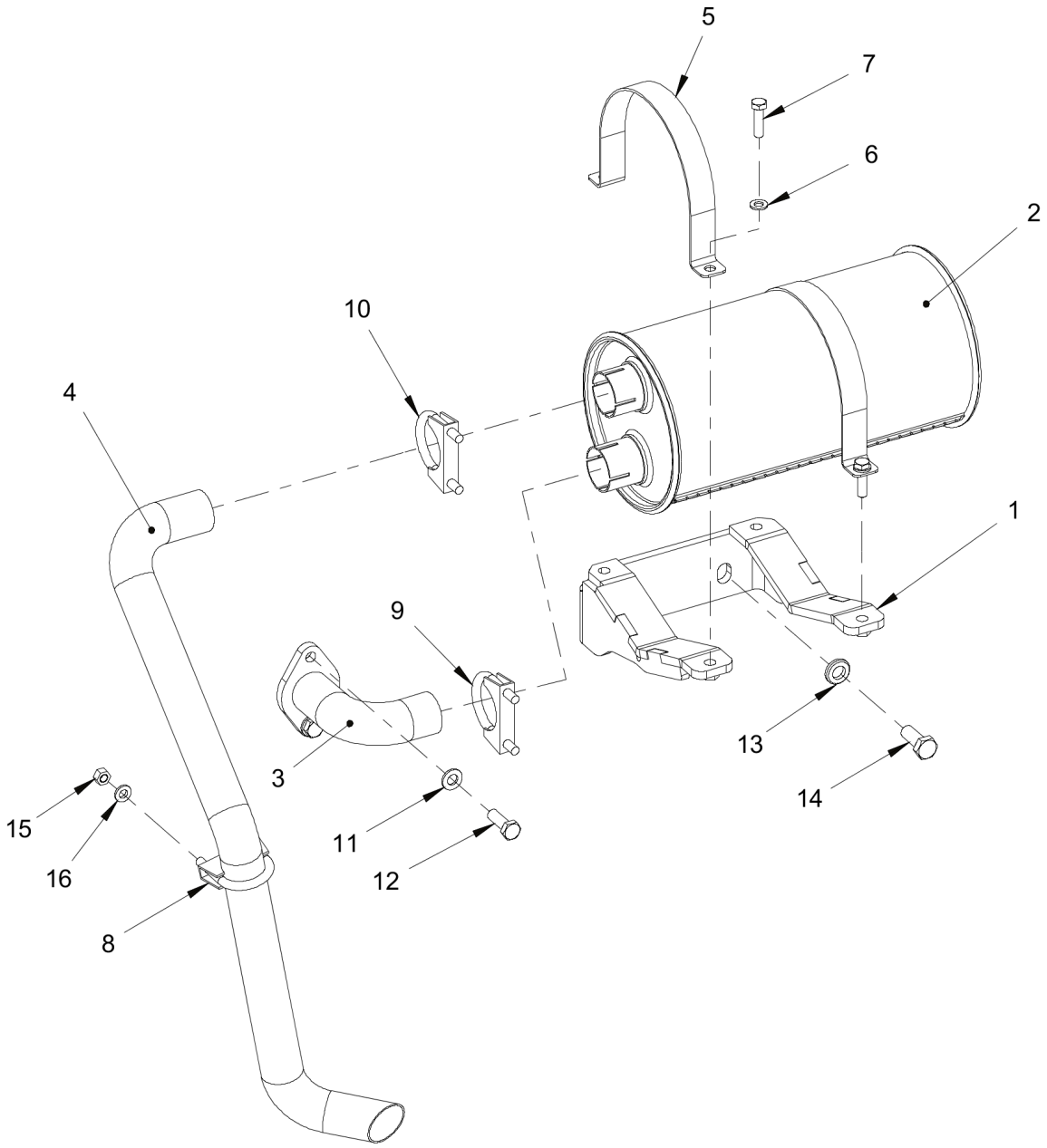

Item	Part No.	Name	Qty	L	C	SN INFO
1	4812125506	Bracket	1			
2	4812125356	Muffler	1			
3	4812125505	Exhaust pipe	1			

Item	Part No.	Name	Qty	L	C	SN INFO
4	4812125267	Exhaust pipe	1			
5	4812125961	Clamp	2			
6	4700904229	Steel plain washer 8.4X16X1.5	4			
7	4700500022	Hexagon screw M8X30 8.8 A2K	4			
8	4700927568	Clamp	1			
9	4700313121	Clamp	2			
11	4812122654	Steel plain washer	2			
12	0147195944	Hex head screw	2			
13	4700904703	Plain washer 13x24x4 mm	2			
14	4700792250	Screw	2			
15	4700902286	Hexagon lock nut with flange M8	2			
16	4700904556	Steel plain washer	2			

Engine room Air cleaner

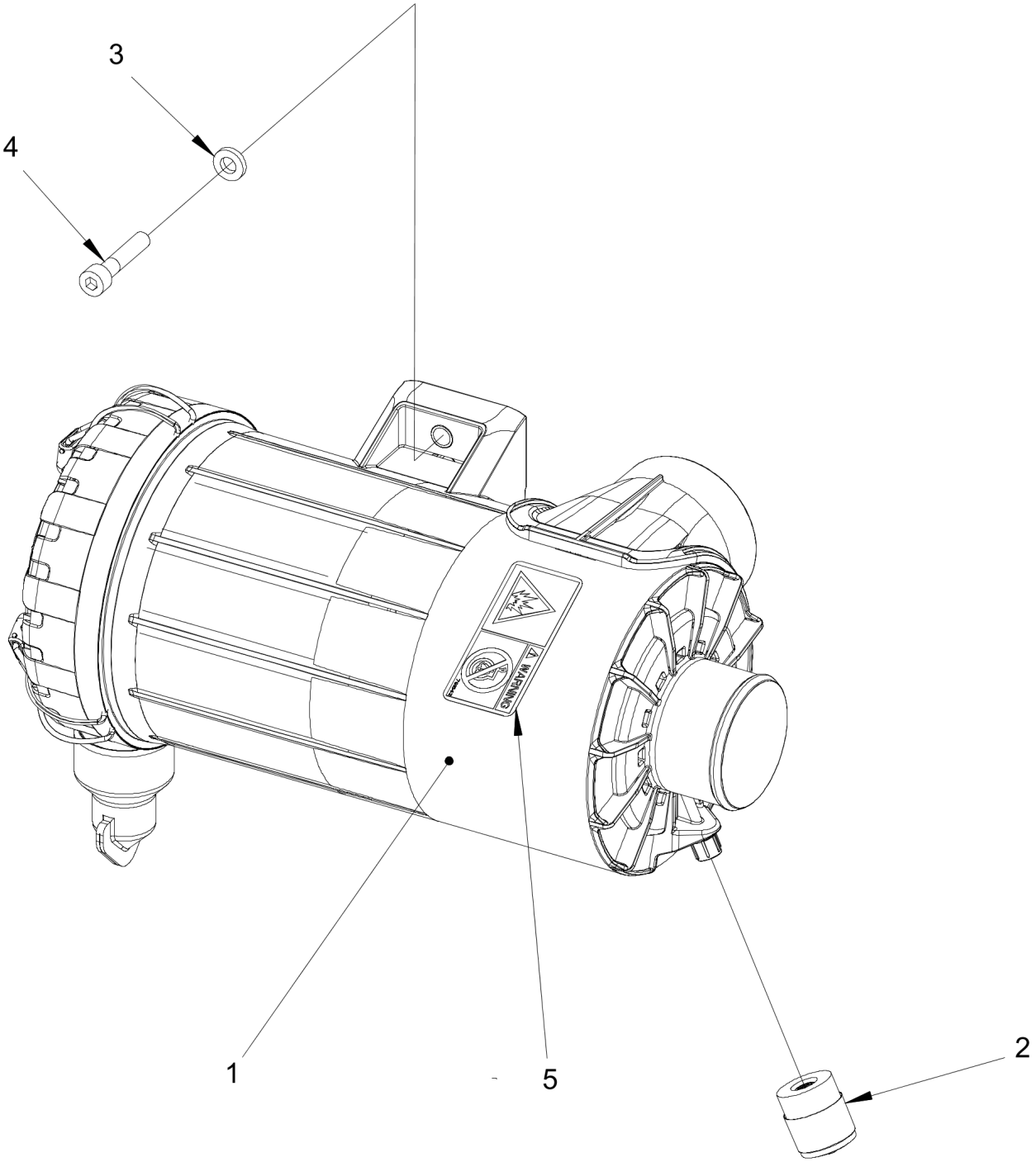

Item	Part No.	Name	Qty	L	C	SN INFO
1	4812125527	Air filter	1			
1	4812161586	Air filter, main	1			
1	4812161587	Air filter element, Safety	1			

Item	Part No.	Name	Qty	L	C	SN INFO
2	4700499497	Indicator	1			
3	4700904556	Steel plain washer	2			
4	4700508056	Screw M8x40	2			
5	4700791642	Safety decal, Use of starting fluid prohib.	1			

Engine room Air hose

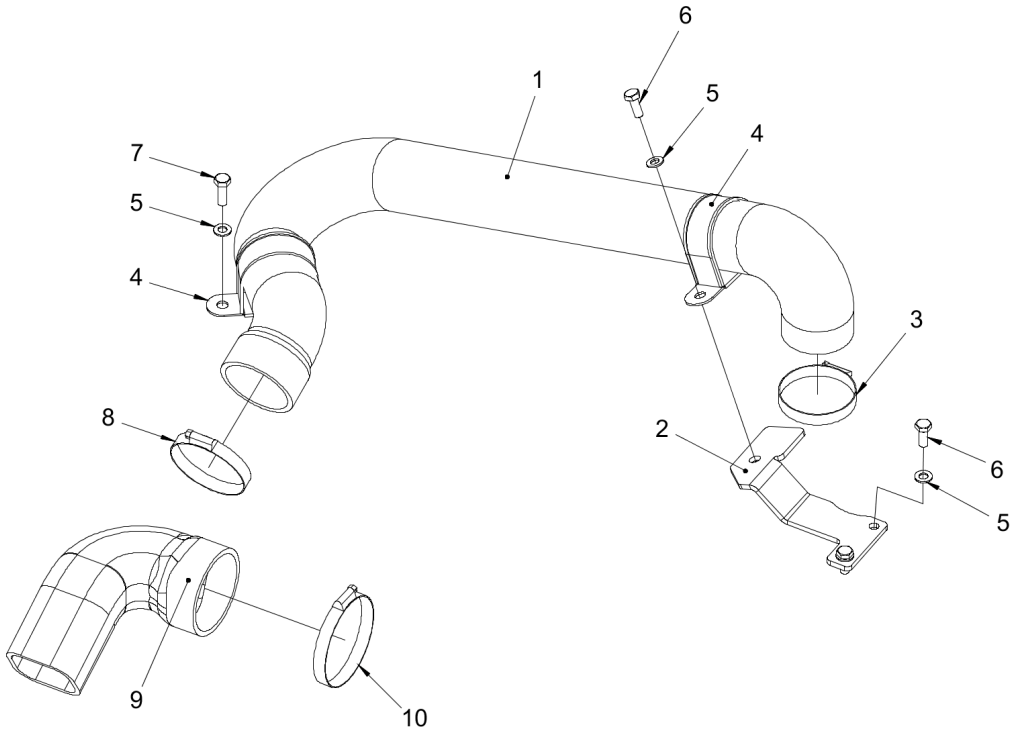

Item	Part No.	Name	Qty	L	C	SN INFO
1	4812125519	Air hose	1			
2	4812125820	Bracket	1			
3	4700313023	Hose clamp	1			

Item	Part No.	Name	Qty	L	C	SN INFO
4	4700903703	Pipe clamp covered	2			
5	4700904229	Steel plain washer 8.4X16X1.5	4			
6	4700500053	Screw, M8x20 mm 8.8 A2K	3			
7	4700500021	Hexagon head screw M	1			
8	4700313023	Hose clamp	1			
9	4812126945	Air hose	1			
10	4700313038	Hose clamp	1			

Engine room Engine hood, cpl.

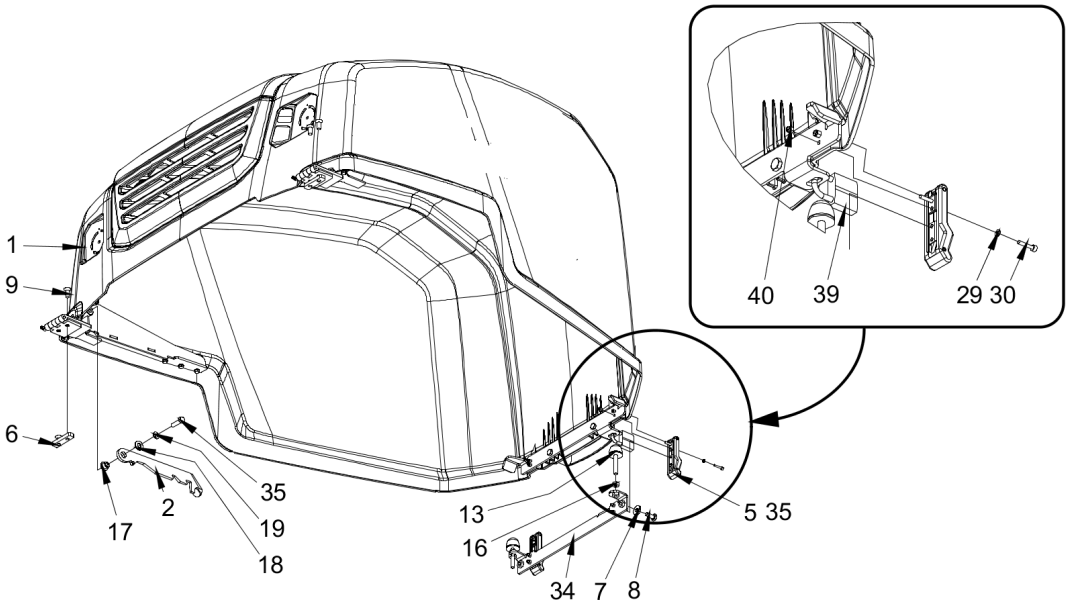

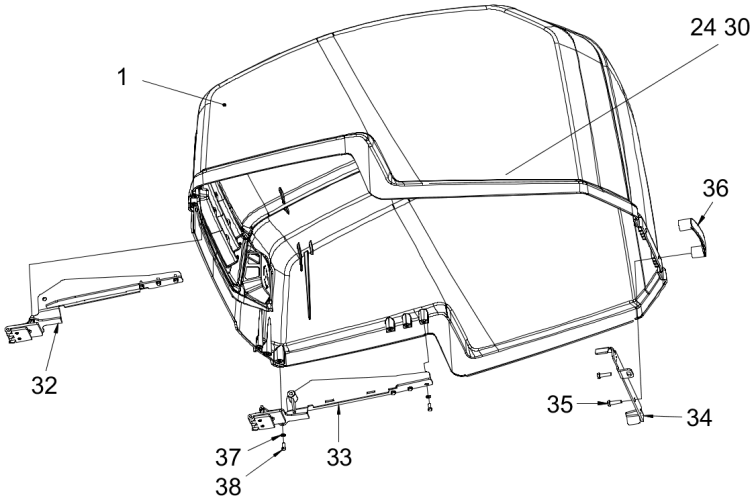

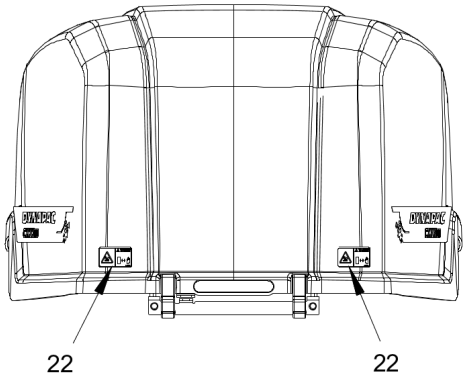

Item	Part No.	Name	Qty	L	C	SN INFO
1	4812127220	Engine hood	1			
2	4812126979	Lock	1			
4	4812125831	Bracket	1			

Item	Part No.	Name	Qty	L	C	SN INFO
5	4700388846	Latch	2			
6	4812127078	Nut plate	2			
7	4700904640	Steel plain washer	2			
8	4700500053	Screw, M8x20 mm 8.8 A2K	2			
9	4700513003	Screw	4			
13	4812114318	Shock absorber	2			
16	4700570005	Hexagon nut M	2			
17	4700791939	Bushing	1			
18	4700791938	Washer	1			
19	4700904229	Steel plain washer 8.4X16X1.5	1			
22	4700903424	Decal hot surface	2			
29	4700904698	Plain washer	8			
30	4700903386	Screw	8			
31		Engine hood	1			
32	4812127090	Hinge	1			
33	4812127091	Hinge	1			
34	4812125831	Bracket	1			
35	4700500022	Hexagon screw M8X30 8.8 A2K	1			
36	4700387948	Handle	1			
37	4700904228	Steel plain washer	12			
38	4700500185	Hexagon head screw M	12			
39	4700358881	Padlock	1			
40	4700923976	Lock nut	8			

Engine room Bracket

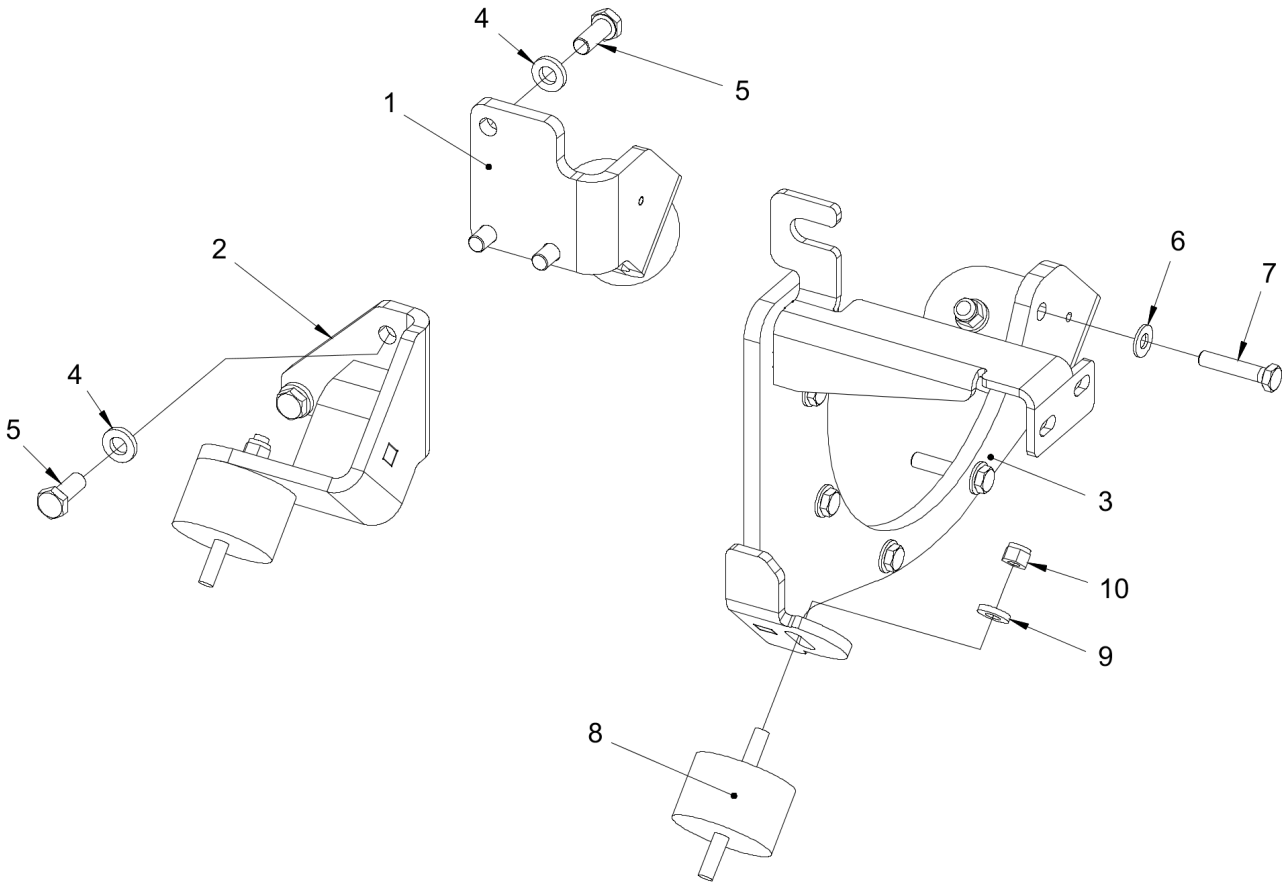

Item	Part No.	Name	Qty	L	C	SN INFO
1	4812125384	Bracket	1			
2	4812127327	Bracket	1			
3	4812125386	Bracket	1			

Item	Part No.	Name	Qty	L	C	SN INFO
4	4700904703	Plain washer 13x24x4 mm	6			
5	4700792250	Screw	6			
6	4700904230	Plain washer M10 10.5X22X2.0	5			
7	4812125507	Hexagon head screw	5			
8	4812125630	Shock absorber	4			
9	4700904557	Steel plain washer	4			
10	4700586018	Hex bolt M06X020H 8.8 A2K	4			

Engine room Coupling

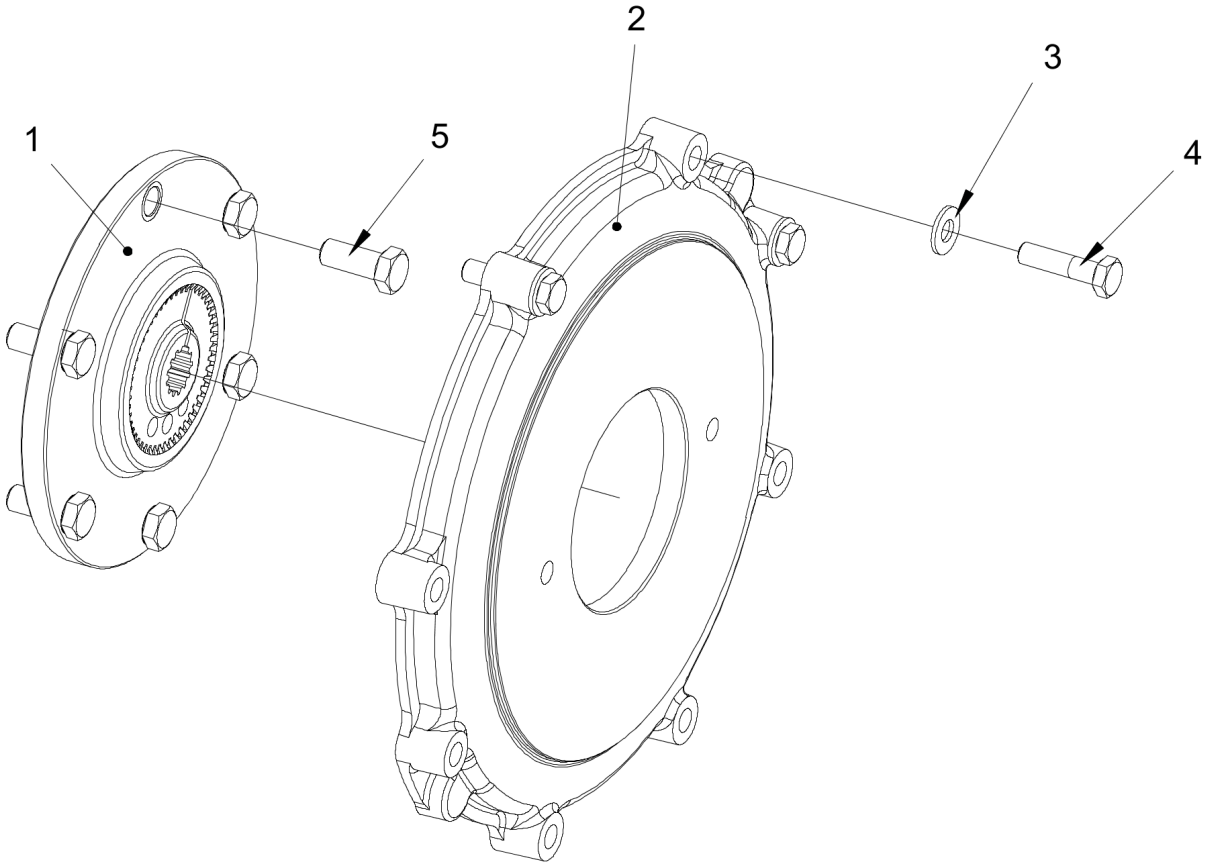

Item	Part No.	Name	Qty	L	C	SN INFO
1	4812120689	Clutch	1			
2	4812125668	Bracket	1			
3	4700904230	Plain washer M10 10.5X22X2.0	3			

Item	Part No.	Name	Qty	L	C	SN INFO
4	4811000285	Screw	3			
5	4700500046	Hex. head screw M12x030H	6			

Engine room Expansion tank

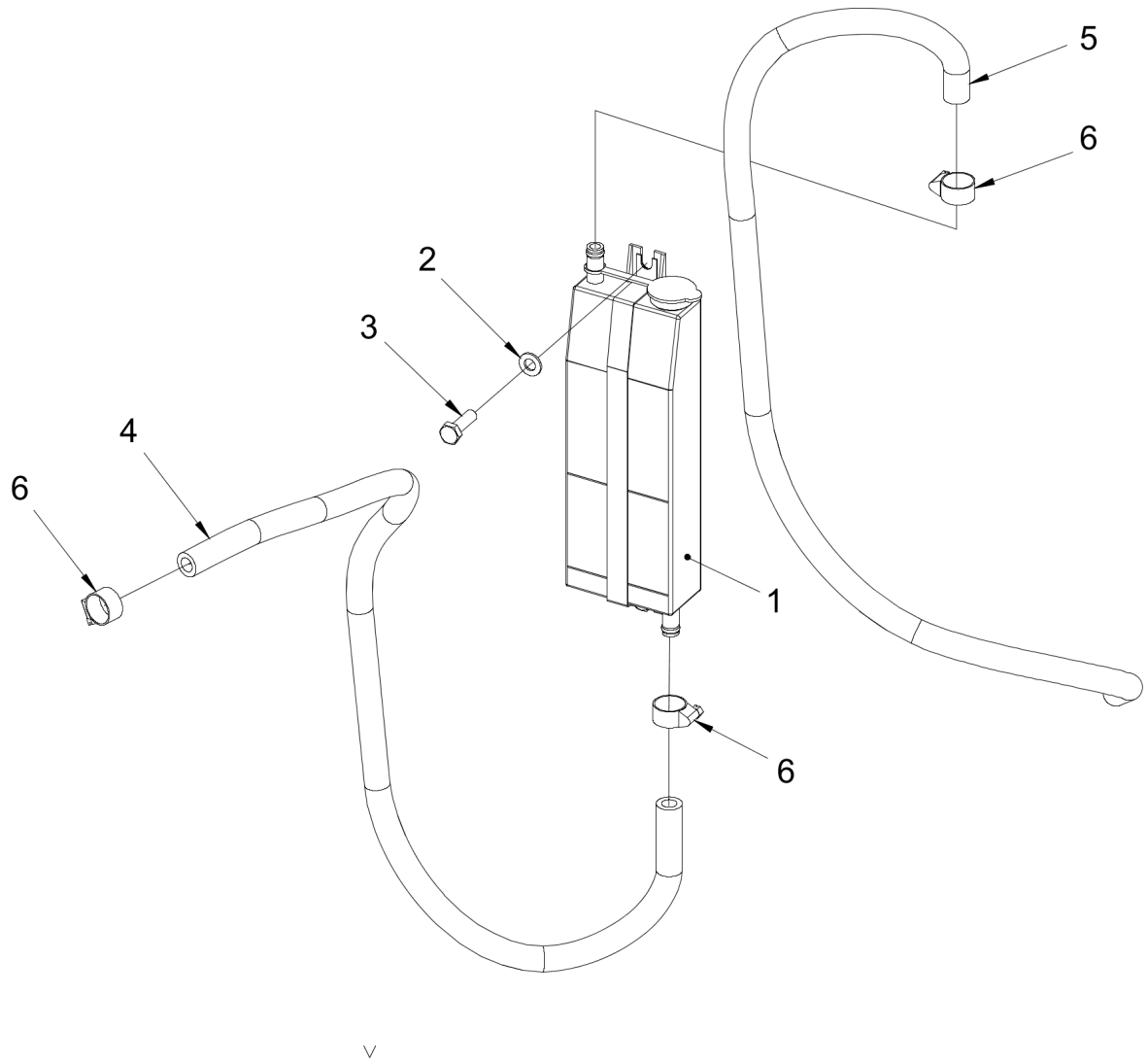

Item	Part No.	Name	Qty	L	C	SN INFO
1	4812125796	Expansion tank	1			
2	4700904229	Steel plain washer 8.4X16X1.5	2			
3	4700500021	Hexagon head screw M	2			

Item	Part No.	Name	Qty	L	C	SN INFO
4	4812122244	Coolant hose	1			
5	4812122244	Coolant hose	0,9			
6	4700313108	Hose clamp	3			

Engine room Cooler

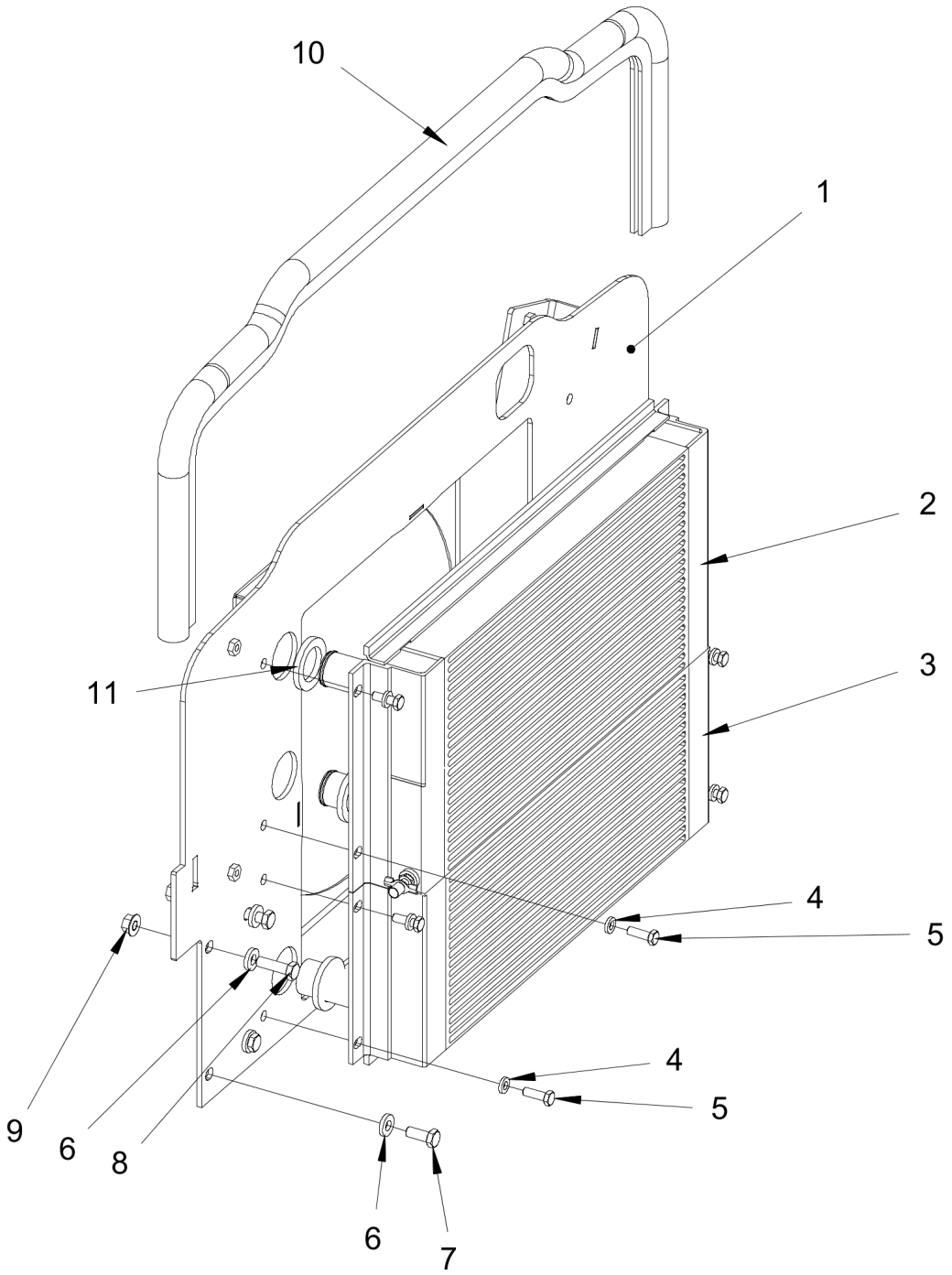

Item	Part No.	Name	Qty	L	C	SN INFO
1	4812125397	Fan shroud	1			
2	4812126898	Water cooler	1			
3	4812126899	Hydraulic oil cooler	1			

Item	Part No.	Name	Qty	L	C	SN INFO
4	4700904556	Steel plain washer	8			
5	4700500021	Hexagon head screw M	8			
6	4700904557	Steel plain washer	8			
7	4700500028	Hexagon Screw M	6			
8	4700500030	Hexagon screw M	2			
9	4700792817	Hexagon nut with flange	2			
10	4812127643	Edge trim	1,325 M			
11	4812126953	Insulation	4			

Engine room Coolant hose module

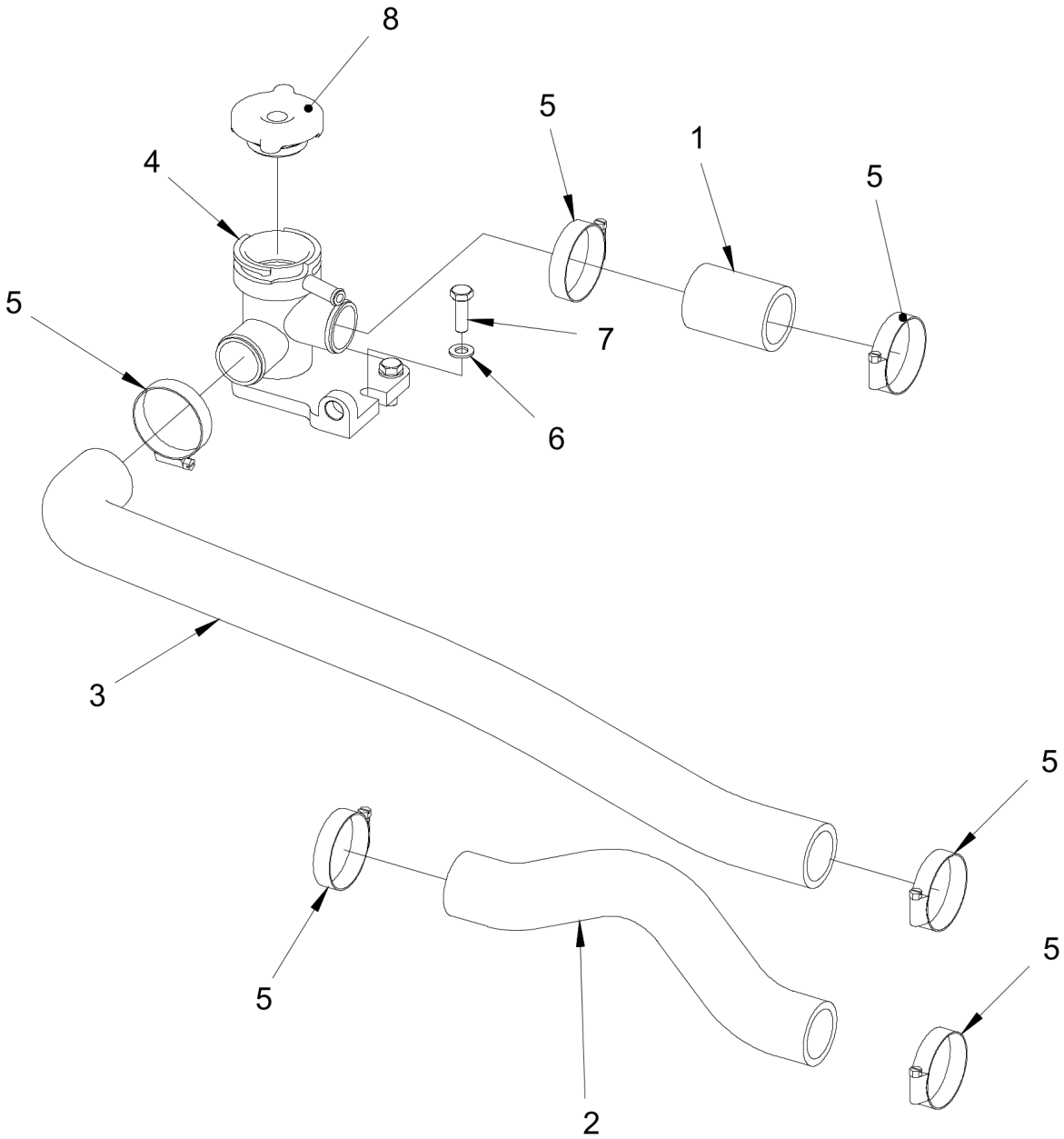

Item	Part No.	Name	Qty	L	C	SN INFO
1	4812125526	Cooler hose	1			
2	4812125516	Cooler hose	1			
3	4812125517	Cooler hose	1			

Item	Part No.	Name	Qty	L	C	SN INFO
4	4812125661	Filling pipe	1			
5	4700313007	Hose clamp	6			
6	4700904229	Steel plain washer 8.4X16X1.5	2			
7	4700500021	Hexagon head screw M	2			
8	4812125508	Cap	1			

Engine room Fuel tank

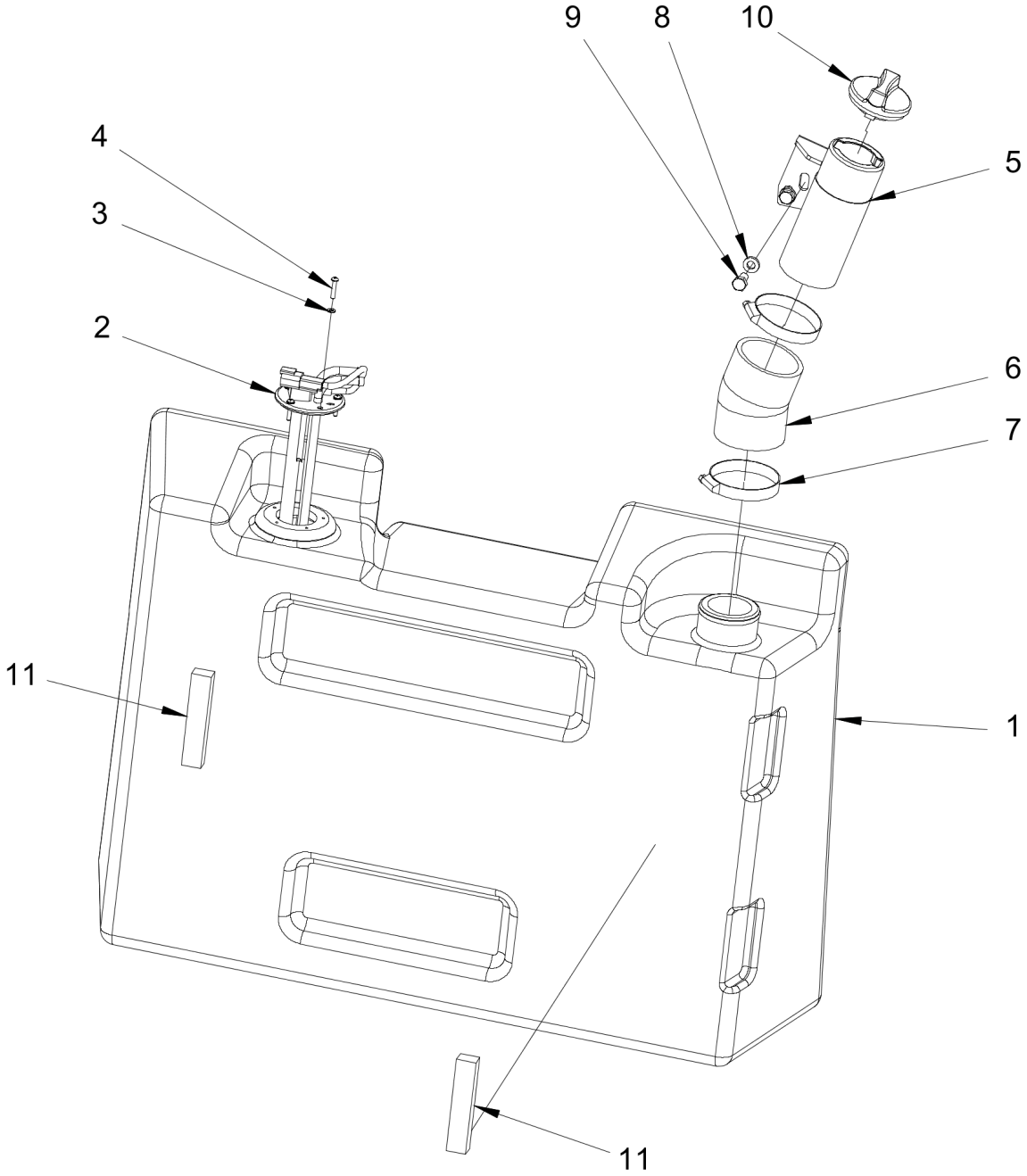

Item	Part No.	Name	Qty	L	C	SN INFO
1	4812125018	Fuel tank	1			
2	4700378574	Level gauge	1			
2-1	4700378589	Gasket	1			

Item	Part No.	Name	Qty	L	C	SN INFO
3	4700904698	Plain washer	5			
4	4700903236	Thread rolling screw	5			
5	4812128604	Bracket	1	A		
6	4812125587	Hose	1			
7	4700313023	Hose clamp	2			
8	4700904556	Steel plain washer	2			
9	4700500019	Hexagon head screw M	2			
10	4812128597	Cap	1	B		
11	4700202041	Rubber strip	2	C		

Comments for Page: Fuel tank

(L)OCAL REMARKS

A | Interchangeable together with pos. 10 only.

B | Interchangeable together with pos. 5 only.

C | L = 0,10 m

Engine room Fuel hoses

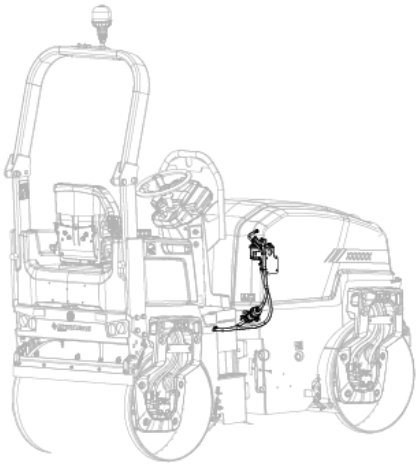

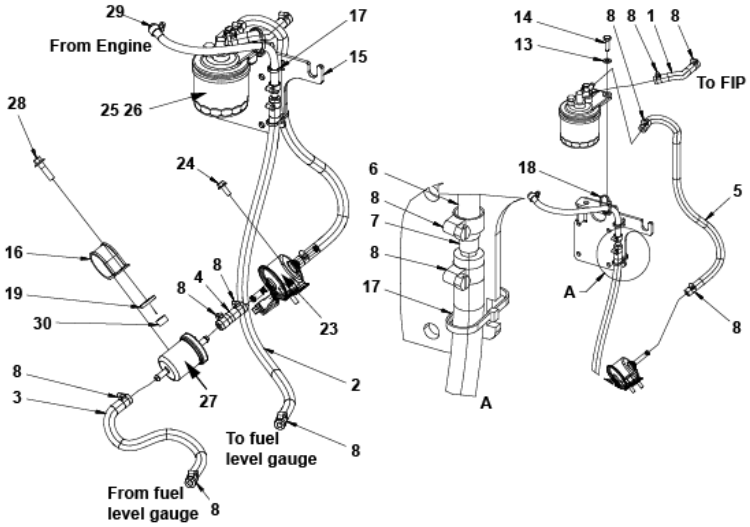

Item	Part No.	Name	Qty	L	C	SN INFO
1	4700904984	Fuel hose	0,18 M			
2	4700904984	Fuel hose	0,68 M			

Item	Part No.	Name	Qty	L	C	SN INFO
3	4700904984	Fuel hose	0,32 M			
4	4700904984	Fuel hose	0,05 M			
5	4700904984	Fuel hose	0,55 M			
6	4700791422	Hose	0,33 M			
7	4700791744	Adapter	1			
8	4700313108	Hose clamp	10			
13	4700904229	Steel plain washer 8.4X16X1.5	2			
14	4700500021	Hexagon head screw M	2			
15	4812126927	Bracket	1			
16	4700283711	Hose clamp	1			
17	4700925802	Cable tie	2			
18	4700313041	Cable tie	1			
19	4700904734	Steel plain washer	1			
23	4812117689	Fuel pump	1			
24	4700541703	Thread forming screw	2			
25	4812162283	Fuel filter, cpl.	1			
26	4812156263	Fuel filter element	1			
27	4812156264	Pre-fuel filter element	1			
28	4700500506	Screw, M8x30 mm 8.8 A2K	1			
29	4700904394	Hose clamp	1			
30	4812126957	Spacer sleeve	1			

Engine room Battery holder

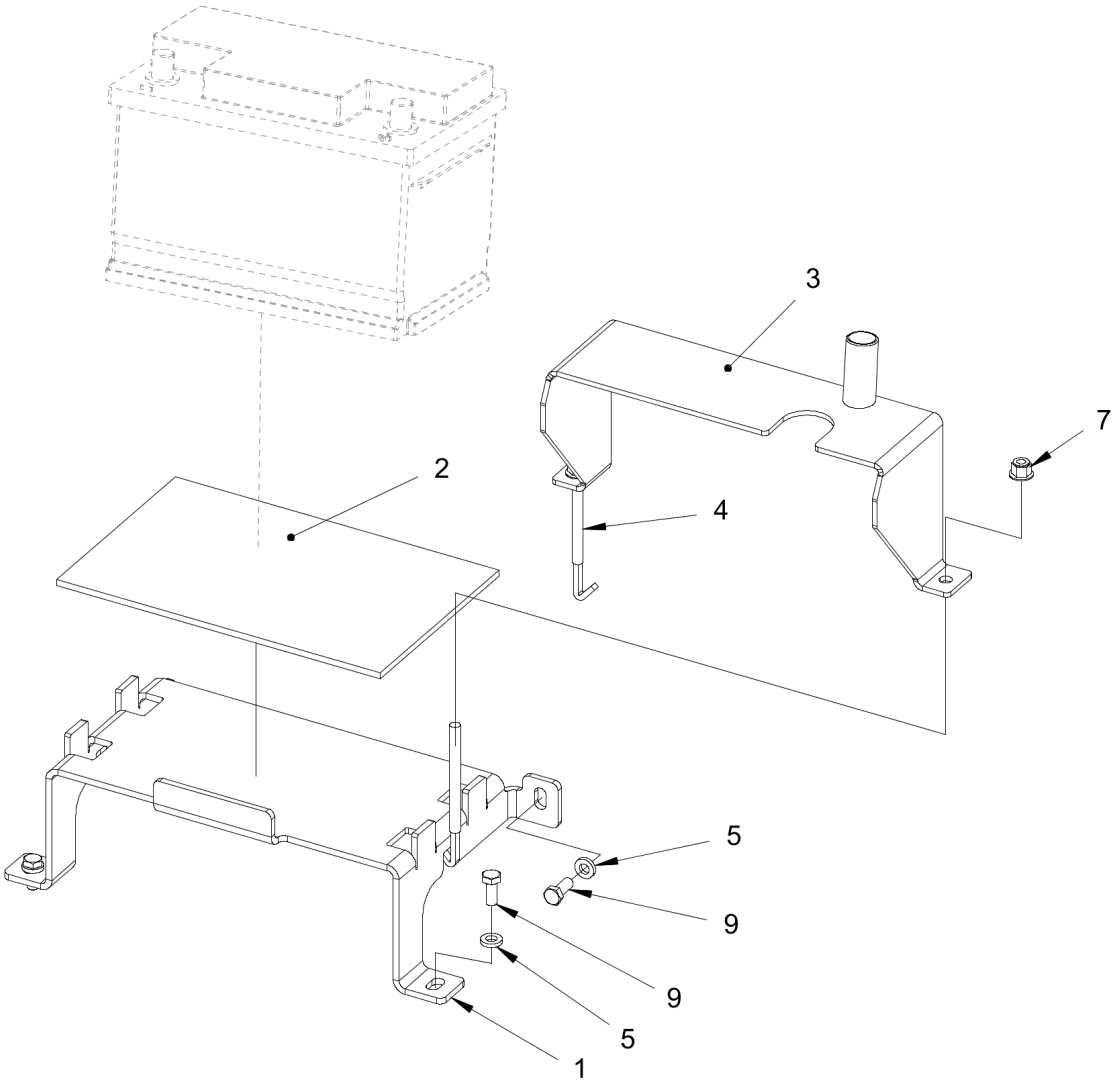

Item	Part No.	Name	Qty	L	C	SN INFO
1	4812126956	Bracket	1			
2	4812124988	Rubber cloth	1			
3	4812128404	Bracket	1			

Item	Part No.	Name	Qty	L	C	SN INFO
4	4700379064	Screw, M8	2			
5	4700904556	Steel plain washer	3			
7	4700902286	Hexagon lock nut with flange M8	2			
9	4700500053	Screw, M8x20 mm 8.8 A2K	1			

Engine room Fan

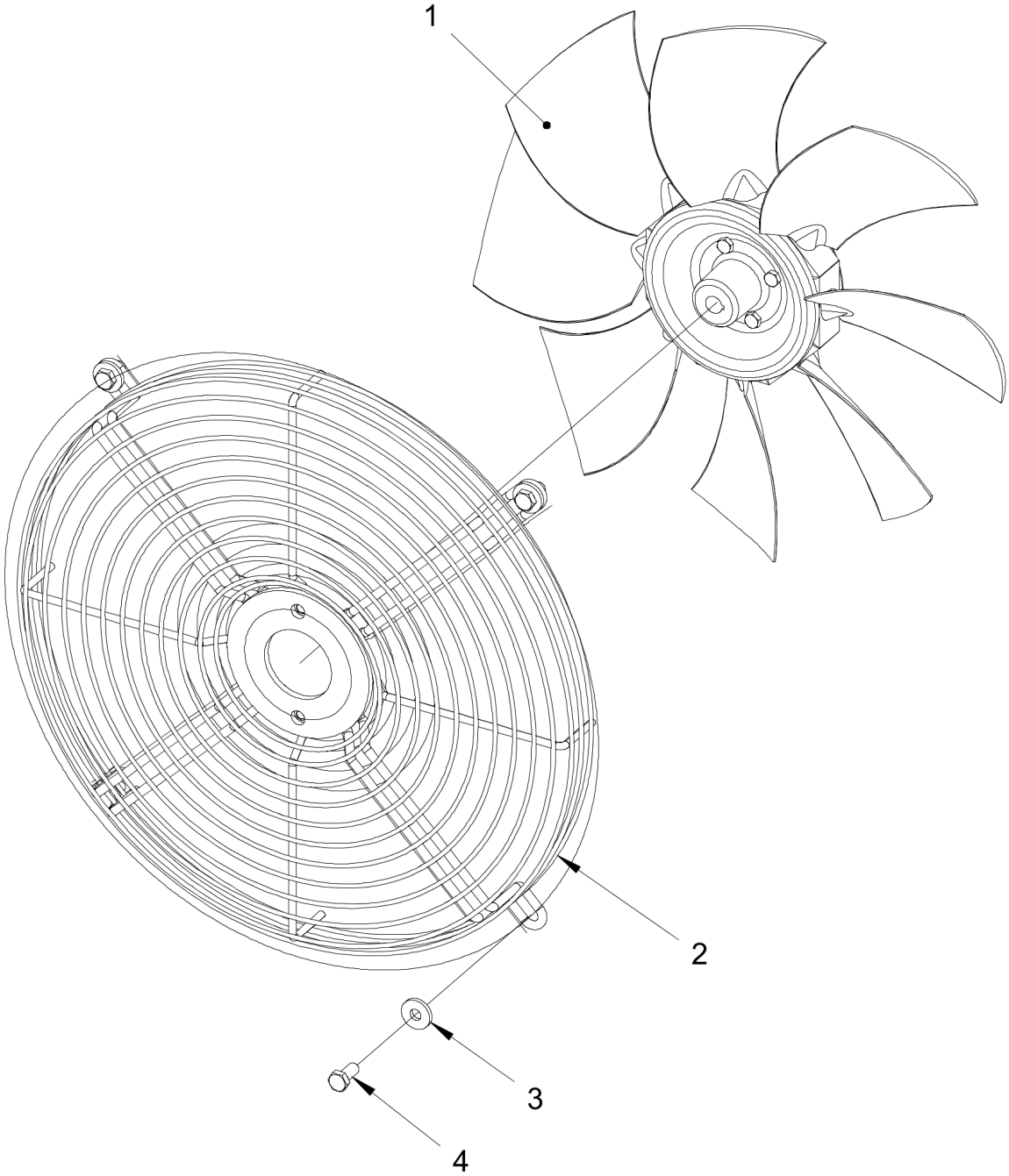

Item	Part No.	Name	Qty	L	C	SN INFO
1	4812125655	Fan	1			
2	4812125641	Fan protection	1			
3	4700904640	Steel plain washer	4			

Item	Part No.	Name	Qty	L	C	SN INFO
4	4700500100	Hexagon screw	4			

Engine room Hydraulic oil tank

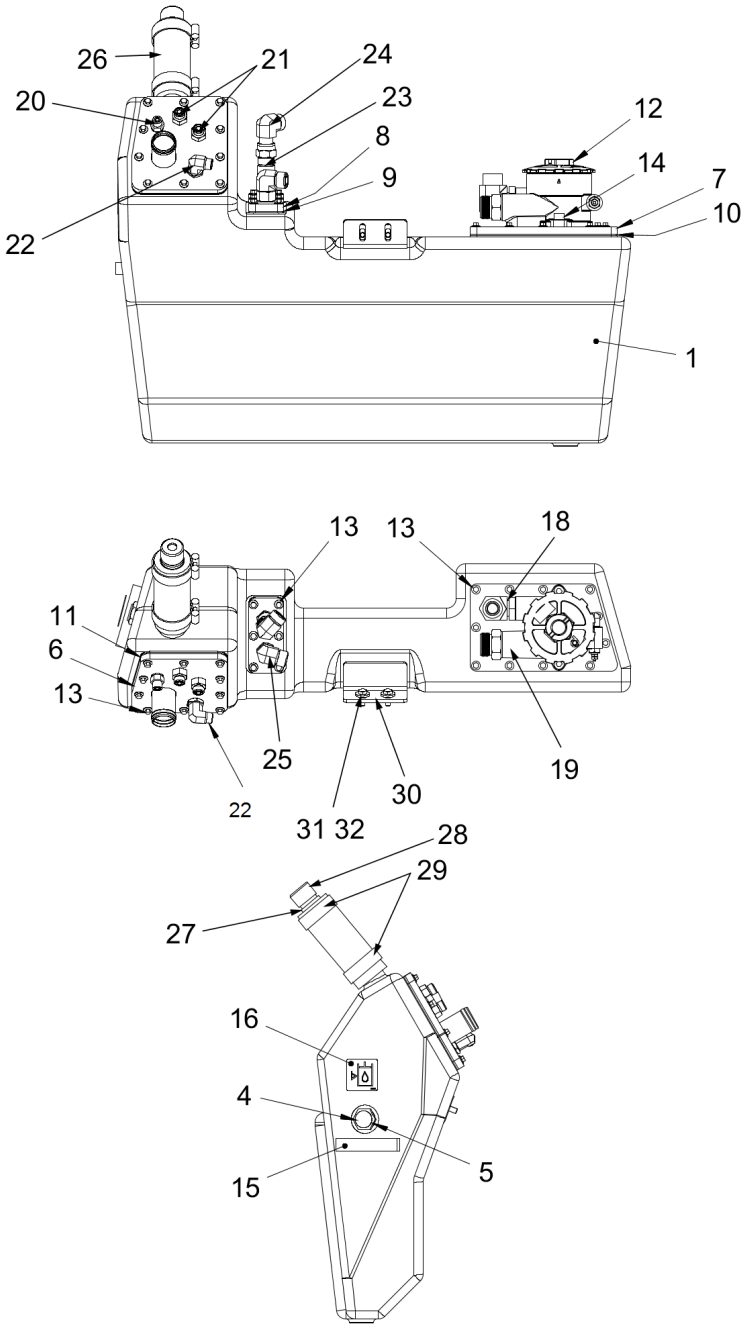

Item	Part No.	Name	Qty	L	C	SN INFO
1	4812125476	Hydarulic oil tank	1			
4	4700813443	O-ring	1			
5	4700791395	Sight plug	1			

Item	Part No.	Name	Qty	L	C	SN INFO
6	4812125477	Lid	1			
7	4812125478	Lid	1			
8	4812125651	Lid	1			
9	4812125652	Gasket	1			
10	4812125479	Gasket	1			
11	4812125480	Gasket	1			
12	4812113327	Hydraulic oil filter, cpl.	1			
12	4812113328	Hydraulic oil filter element	1			
13	4700500501	Hexagon screw with flange M	27			
14	4700508028	Screw, M10x20H	2			
15	4700202041	Rubber strip	0,1 M			
16	4700272373	Decal, hydraulic oil level	1			
18	4700791698	Elbow connector 90 orfs	1			
19	4700792338	Straight connector ORFS	1			
20	4700791914	Adapter	1			
21	4700791828	Adapter	2			
22	4700791840	Adapter	1			
23	4700791743	Straight connector ORFS	1			
24	4700904766	Connector elbow 90 ORFS	1			
25	4700791843	Elbow 90, O-ring with swivel	1			
26	4812119321	Hydraulic hose	1			
27	4700357139	Connector	1			
28	4700357138	Ventilating filter	1			
29	4700313126	Clamp	2			
30	4812125676	Bracket	1			
31	4700904640	Steel plain washer	2			
32	4700500053	Screw, M8x20 mm 8.8 A2K	2			

Engine room Belt guard

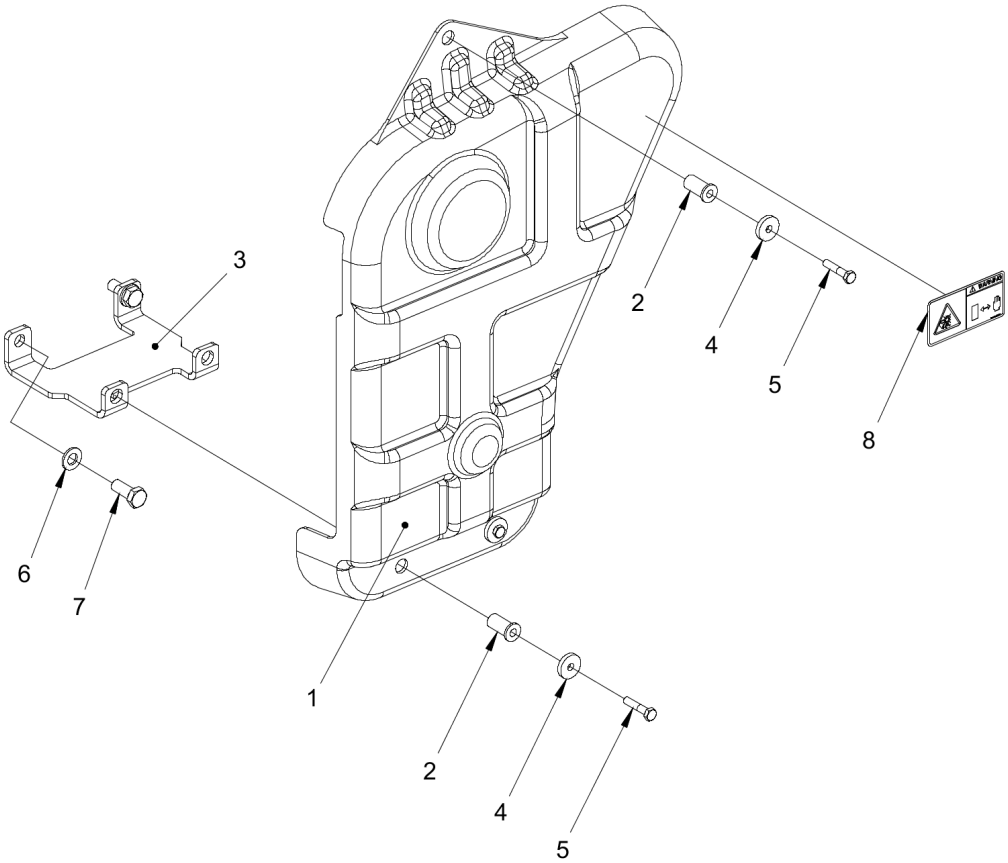

Item	Part No.	Name	Qty	L	C	SN INFO
1	4812125400	Belt guard	1			
2	4812125875	Nut	3			
3	4812125446	Bracket	1			

Item	Part No.	Name	Qty	L	C	SN INFO
4	4700904735	Steel plain washer	3			
5	4700500015	Hexagon head screw M	3			
6	4812122654	Steel plain washer	2			
7	0147195903	Screw DIN961	2			
8	4700903423	Safety decal, Rotating engine components	1			

Engine room Bracket module

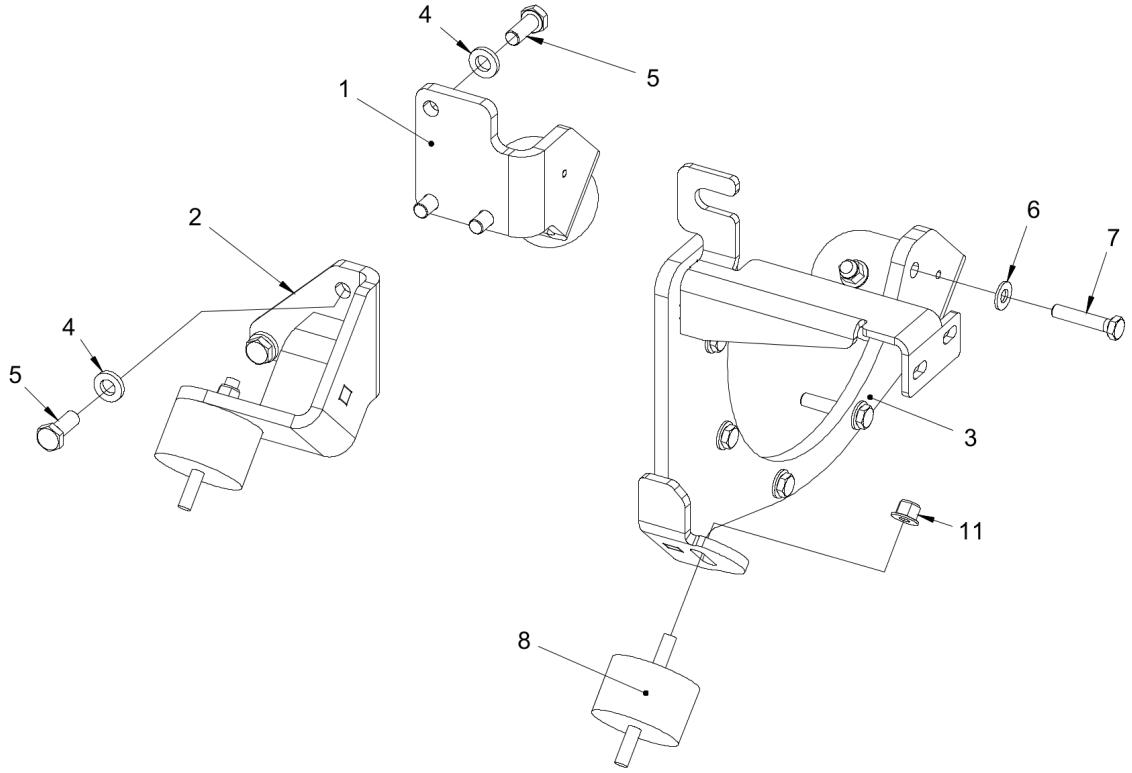

Item	Part No.	Name	Qty	L	C	SN INFO
1	4812125384	Bracket	1			
2	4812127327	Bracket	1			
3	4812125386	Bracket	1			

Item	Part No.	Name	Qty	L	C	SN INFO
4	4700904703	Plain washer 13x24x4 mm	6			
5	4700792250	Screw	6			
6	4700904230	Plain washer M10 10.5X22X2.0	5			
7	4812125507	Hexagon head screw	5			
8	4812125630	Shock absorber	4			
11	4700902287	Nut, M10	4			

Hydraulic system Hydraulic, Cooler and fan

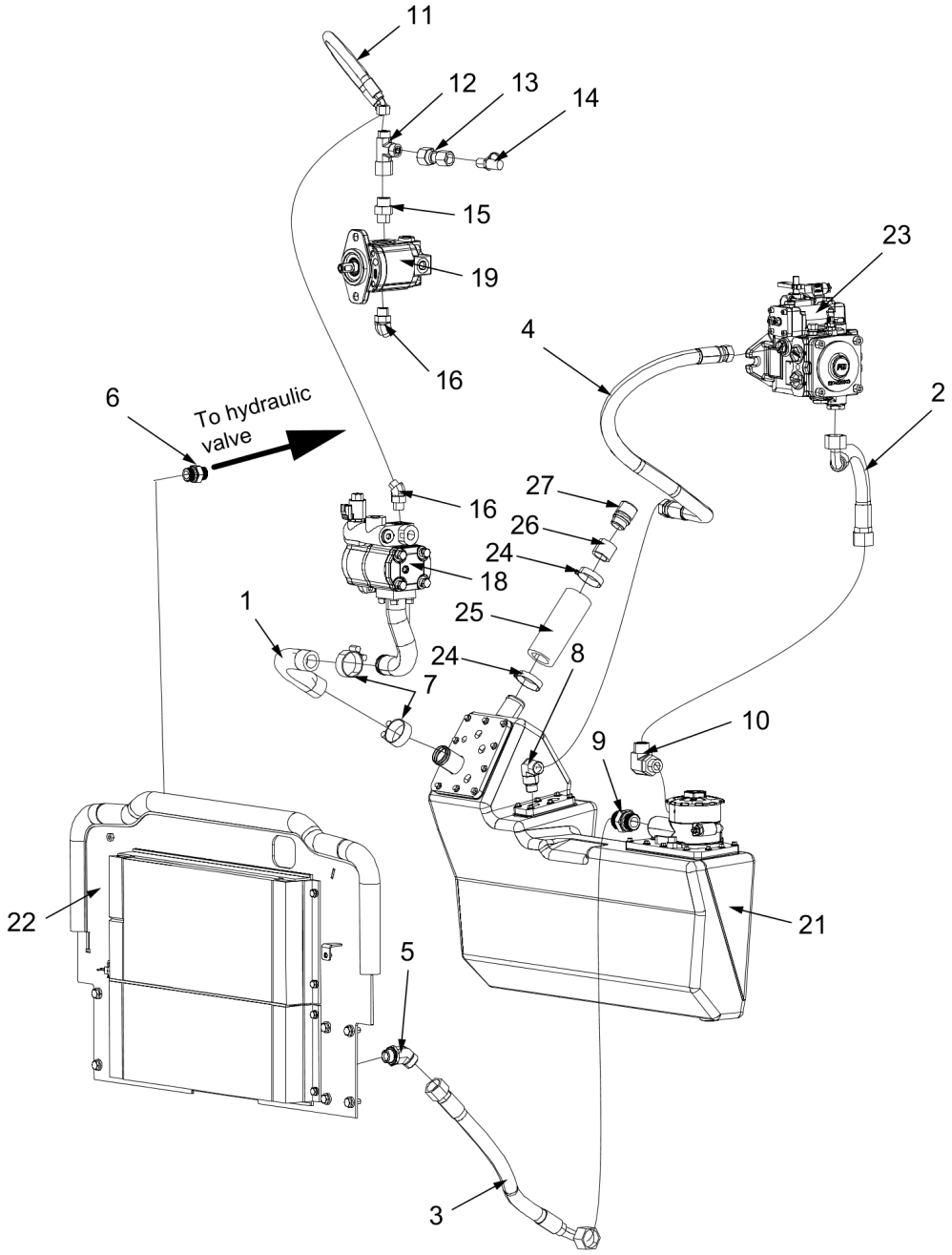

Item	Part No.	Name	Qty	L	C	SN INFO
1	4812131890	Hydraulic hose	1			
2	4812126968	Hydraulic hose	1			
3	4812125709	Hydraulic hose	1			

Item	Part No.	Name	Qty	L	C	SN INFO
4	4812125770	Hydraulic hose	1			
5	4700791808	Elbow adapter 45	1			
6	0570702503	Straight connector	1			
7	4700923378	Hose clamp	1			
8	4700791843	Elbow 90, O-ring with swivel	1			
9	4700792338	Straight connector ORFS	1			
10	4700791698	Elbow connector 90 orfs	1			
11	4812125731	Hydraulic hose	1			
12	4700791414	Tee-connector ORFS	1			
13	4700791847	Straight connector	1			
14	4700923405	Measuring fitting	1			
15	4700791404	Straight o-ring connector	1			
16	4700791416	Elbow 45, O-ring	2			
18	-	Drive unit	1			
19	-	Hydraulic motor	1			
21	-	Hydraulic oil tank	1			
22	-	Cooler	1			
23	-	Drive unit	1			
24	4700313009	Hose clamp	2			
25	4812119321	Hydraulic hose	1			
26	4700357139	Connector	1			
27	4700357138	Ventilating filter	1			

Vibration system Vibration system, external vibration valve - common

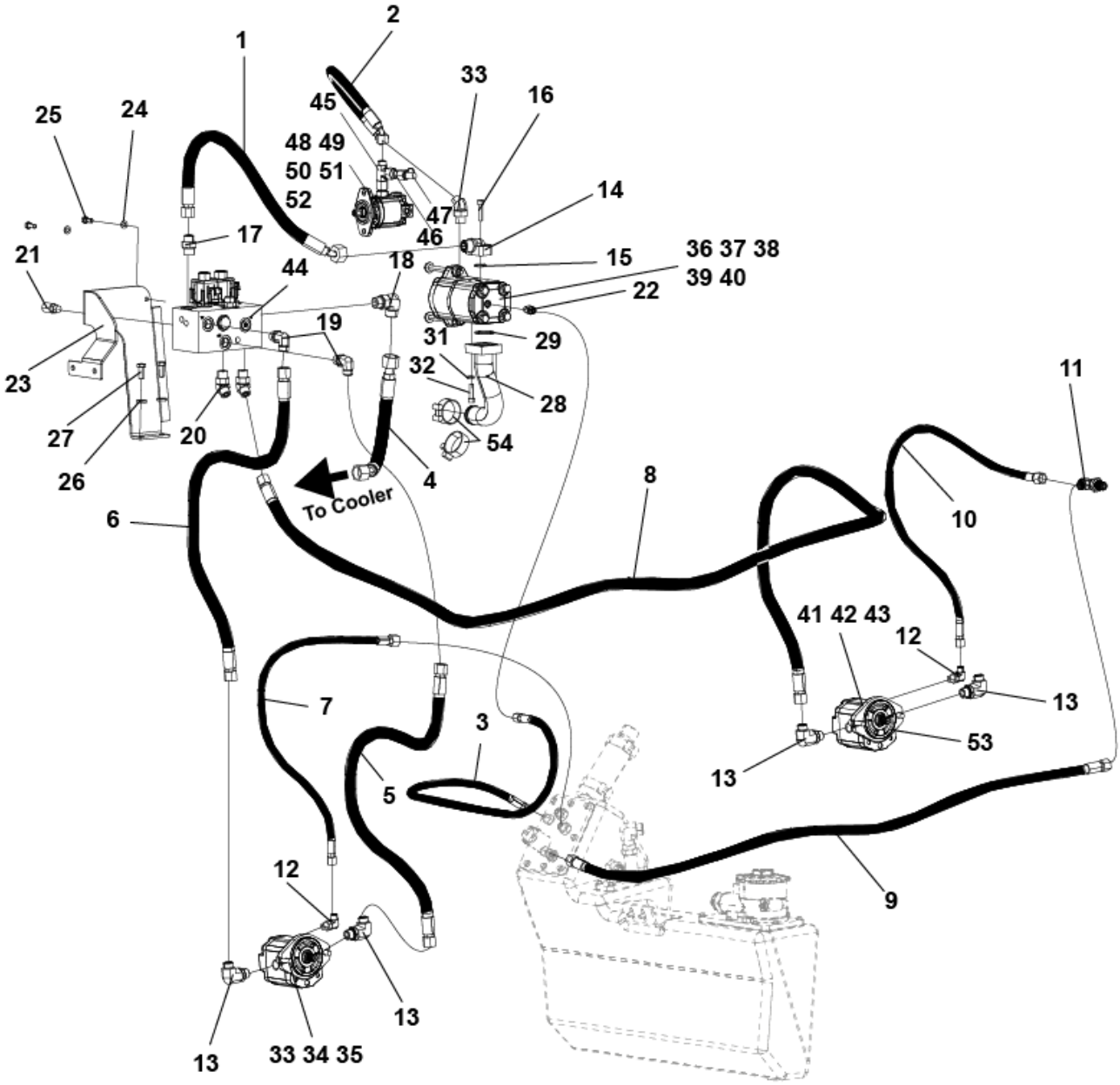

Item	Part No.	Name	Qty	L	C	SN INFO
1	4812125730	Hydraulic hose	1			
2	4812125731	Hydraulic hose	1			
3	4700484032	Hydraulic hose	1			
4	4812125732	Hydraulic hose	1			
5	4812125733	Hydraulic hose	1			
6	4812125734	Hydraulic hose	1			
7	4812125735	Hydraulic hose	1			
8	4812125736	Hydraulic hose	1			
9	4812125737	Hydraulic hose	1			
10	4812125738	Hydraulic hose	1			

Item	Part No.	Name	Qty	L	C	SN INFO
11	4812114492	Bulkhead union	1			
12	4700791397	Connector	2			
13	4700791699	Adapter	4			
14	4812113633	Flange connector	1			
15	4700904774	O-ring 90	1			
16	4700508027	Screw	4			
17	4700791410	Straight o-ring connector	1			
18	4700791843	Elbow 90, O-ring with swivel	1			
19	4700791841	Connector elbow 90 ORFS	2			
20	4700791796	Elbow 45, O-ring with swivel	2			
21	4700900229	Measuring fitting	1			
22	4700791744	Adapter	1			
23	4812125501	Bracket	1			
24	4700904229	Steel plain washer 8.4X16X1.5	2			
25	4700500053	Screw, M8x20 mm 8.8 A2K	2			
26	4700904557	Steel plain washer	2			
27	4700500028	Hexagon Screw M	2			
28	4812125469	Flange connector	1			
29	4700160016	O-ring	1			
30	4700923378	Hose clamp	2			
31	4700904556	Steel plain washer	4			
32	4700508048	Hexagon socket head cap screw M	4			
33	4700791416	Elbow 45, O-ring	1			
34	4700792389	Elbow 45 orfs	2			
35	4700792602	Cable Tie with Holder, Nylon Black	3			
36	4812127309	Hydraulic pump	1			
37	4700379458	Gasket	1			
38	4700500078	Hex. screw	2			
39	4700904230	Plain washer M10 10.5X22X2.0	2			
40	4700902287	Nut, M10	2			
41	4812126231	Hydraulic motor	2			
42	4700603018	Washer 10x18x4	2			
43	4700508029	Cylinder screw	2			
44	4812125749	Hydraulic valve	1			
45	4700791414	Tee-connector ORFS	1			
46	4700791847	Straight connector	1			
47	4700923405	Measuring fitting	1			
48		Hydraulic motor	1			

Item	Part No.	Name	Qty	L	C	SN INFO
49	4700904229	Steel plain washer 8.4X16X1.5	2			
50	4700500021	Hexagon head screw M	2			
51	4700904735	Steel plain washer	1			
52	4700508002	Hexagon socket head cap screw M	1			
53	4700160031	O-ring	1			
54	4700923378	Hose clamp	2			

Vibration system Vibration system, external vibration valve - without acc valves

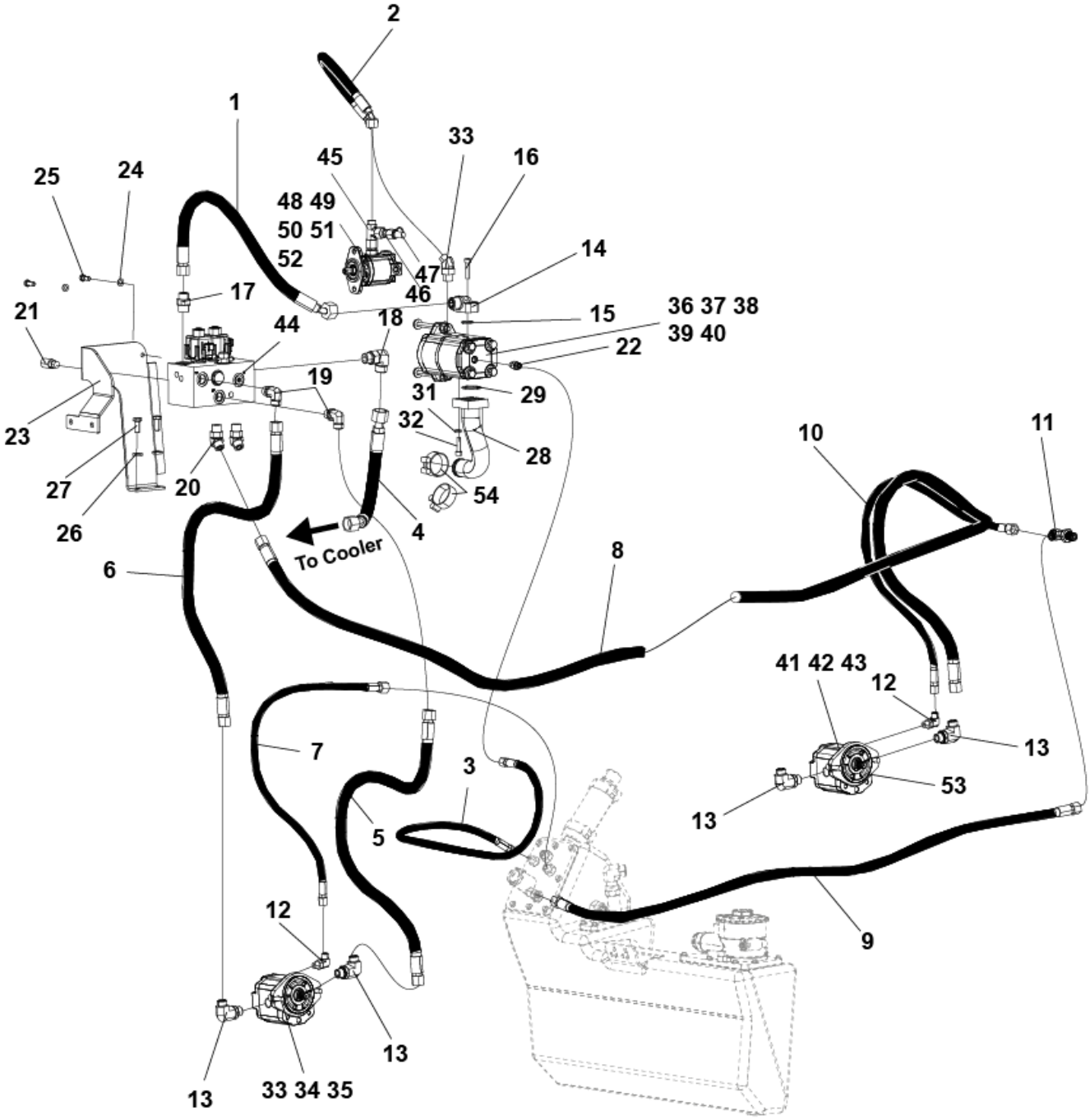

Item	Part No.	Name	Qty	L	C	SN INFO
1	4812125730	Hydraulic hose	1			
2	4812125731	Hydraulic hose	1			
3	4700483906	Hydraulic hose	1			
4	4812125732	Hydraulic hose	1			
5	4812125733	Hydraulic hose	1			
6	4812125734	Hydraulic hose	1			
7	4812125735	Hydraulic hose	1			

Item	Part No.	Name	Qty	L	C	SN INFO
8	4812125745	Hydraulic hose	1			
9	4812125737	Hydraulic hose	1			
10	4812125738	Hydraulic hose	1			
11	4812114492	Bulkhead union	1			
12	4700791397	Connector	2			
13	4700791699	Adapter	4			
14	4812113633	Flange connector	1			
15	4700904774	O-ring 90	1			
16	4700508027	Screw	4			
17	4700791410	Straight o-ring connector	1			
18	4700791843	Elbow 90, O-ring with swivel	1			
19	4700791841	Connector elbow 90 ORFS	2			
20	4700791796	Elbow 45, O-ring with swivel	2			
21	4700900229	Measuring fitting	1			
22	4700791744	Adapter	1			
23	4812125501	Bracket	1			
24	4700904229	Steel plain washer 8.4X16X1.5	2			
25	4700500053	Screw, M8x20 mm 8.8 A2K	2			
26	4700904557	Steel plain washer	2			
27	4700500028	Hexagon Screw M	2			
28	4812125469	Flange connector	1			
29	4700160016	O-ring	1			
30	4700923378	Hose clamp	2			
31	4700904556	Steel plain washer	4			
32	4700508048	Hexagon socket head cap screw M	4			
33	4700791416	Elbow 45, O-ring	1			
34	4700792389	Elbow 45 orfs	2			
35	4700792602	Cable Tie with Holder, Nylon Black	3			
36	4812127309	Hydraulic pump	1			
37	4700379458	Gasket	1			
38	4700500078	Hex. screw	2			
39	4700904230	Plain washer M10 10.5X22X2.0	2			
40	4700902287	Nut, M10	2			
41	4812126231	Hydraulic motor	2			
42	4700603018	Washer 10x18x4	2			
43	4700508029	Cylinder screw	2			
44	4812125749	Hydraulic valve	1			
45	4700791414	Tee-connector ORFS	1			

Item	Part No.	Name	Qty	L	C	SN INFO
46	4700791847	Straight connector	1			
47	4700923405	Measuring fitting	1			
48		Hydraulic motor	1			
49	4700904229	Steel plain washer 8.4X16X1.5	2			
50	4700500021	Hexagon head screw M	2			
51	4700904735	Steel plain washer	1			
52	4700508002	Hexagon socket head cap screw M	1			
53	4700160031	O-ring	1			
54	4700923378	Hose clamp	2			

Vibration system 4812125749_Hydraulic valve

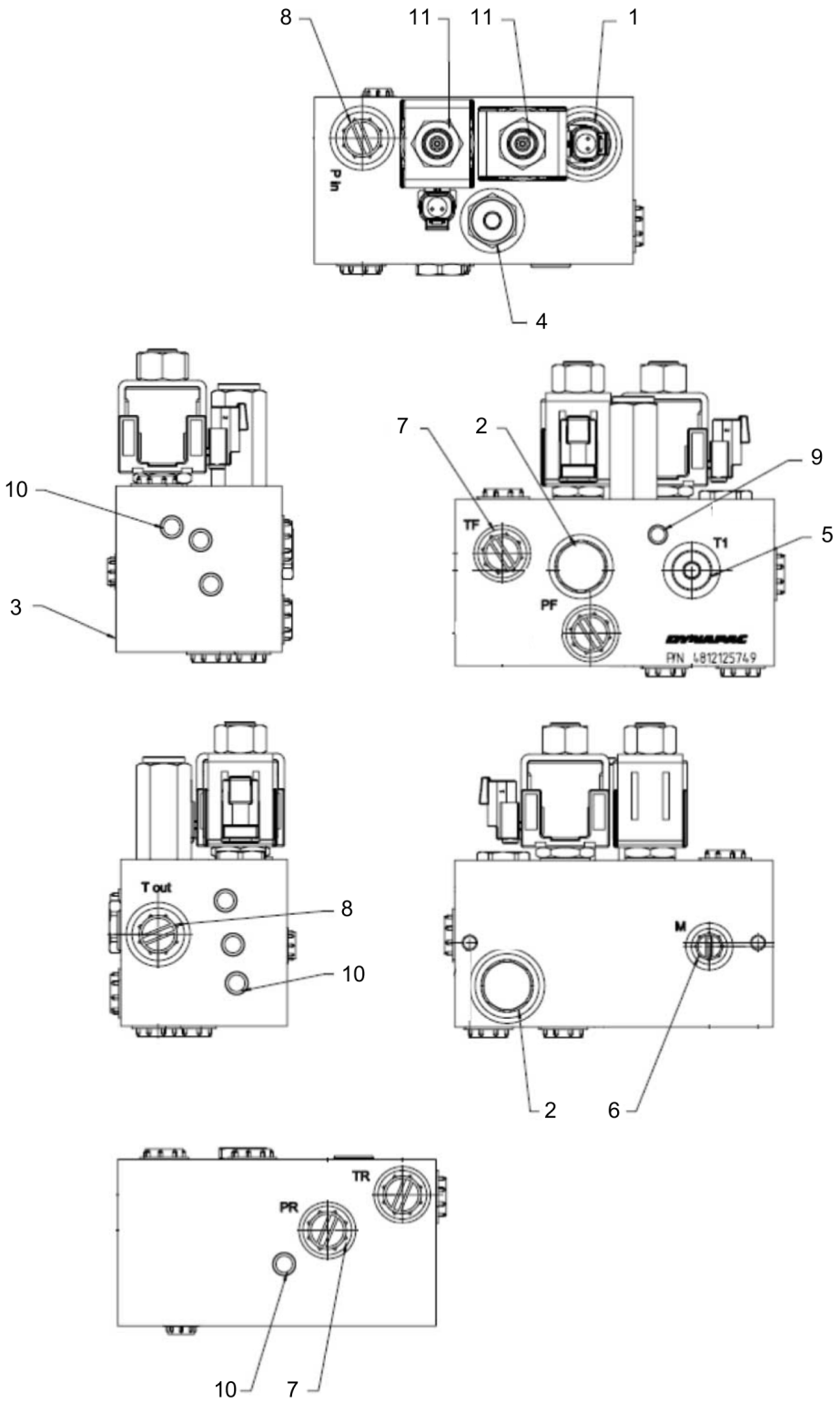

Item	Part No.	Name	Qty	L	C	SN INFO
0	4812125749	Hydraulic valve	1			
1	4812163263	Check valve	1			
1-1	4812163269	Seal kit	1			

Item	Part No.	Name	Qty	L	C	SN INFO
2	4812163264	Check valve	2			
2-1	4812163269	Seal kit	1			
4	4812161588	Pressure relief valve	1			
4-1	4812163269	Seal kit	1	A		
6	-	Plug	1			
7	-	Plug	4			
8	-	Plug	2			
11	4812163265	Vibration valve	2			
11-1	4812163752	Seal kit	1			

Vibration system 4812160957 Seal kit

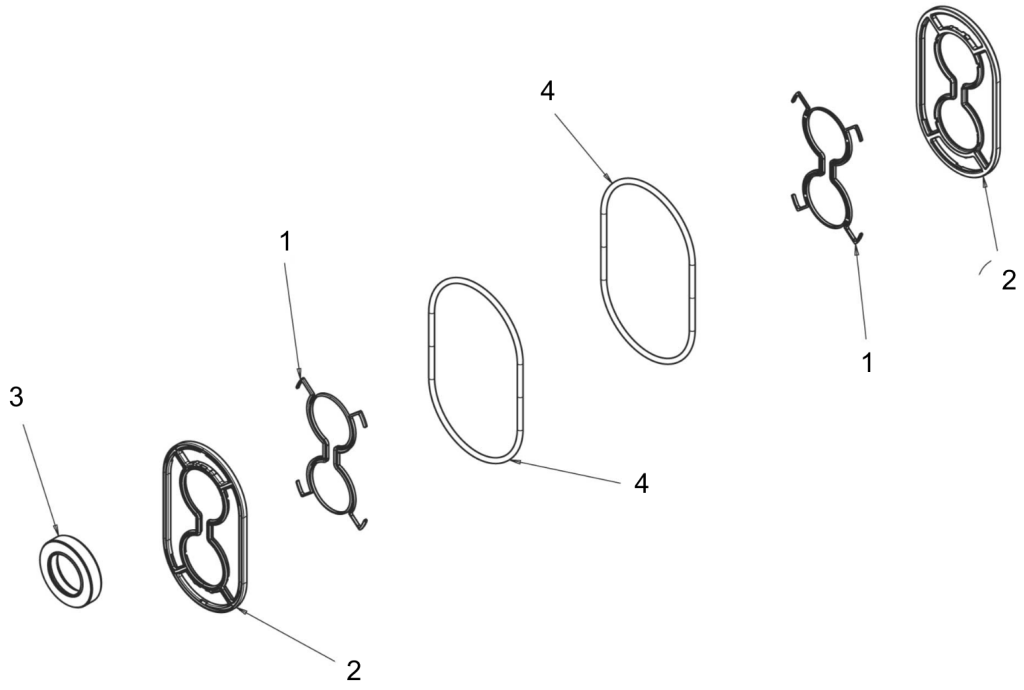

Item	Part No.	Name	Qty	L	C	SN INFO
0	4812160957	Seal kit	1			
1	-	Backing ring	2			
2	-	Pressure seal	2			

Item	Part No.	Name	Qty	L	C	SN INFO
3	-	Shaft seal	1			
4	-	O-ring seal	2			

Vibration system Vibration system, Accessorie valves

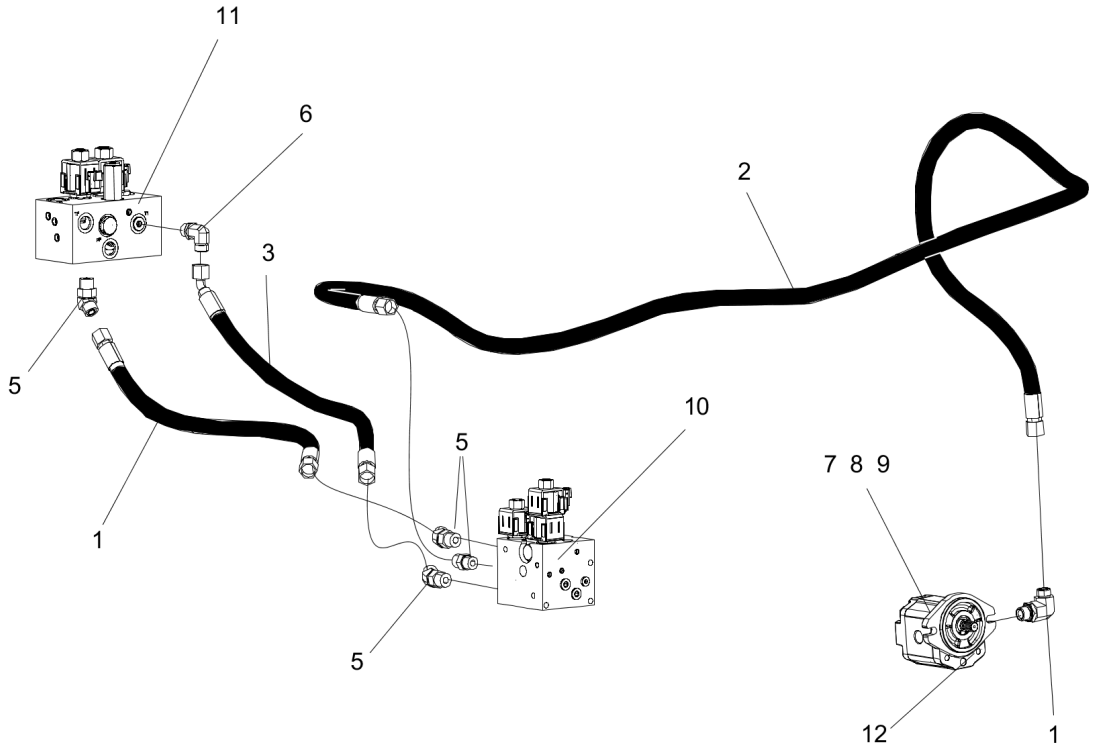

Item	Part No.	Name	Qty	L	C	SN INFO
1	4812125974	Hydraulic hose	1			
2	4812125769	Hydraulic hose	1			
3	4812125975	Hydraulic hose	1			

Item	Part No.	Name	Qty	L	C	SN INFO
5	4700791796	Elbow 45, O-ring with swivel	4			
6	4700791841	Connector elbow 90 ORFS	1			
7	4812126231	Hydraulic motor	1			
8	4700603018	Washer 10x18x4	2			
9	4700508029	Cylinder screw	2			
10	4812125681	Hydraulic valve	1			
11	4812125749	Hydraulic valve	1			
12	4700160031	O-ring	1			

Vibration system Vibration, int vibvlv

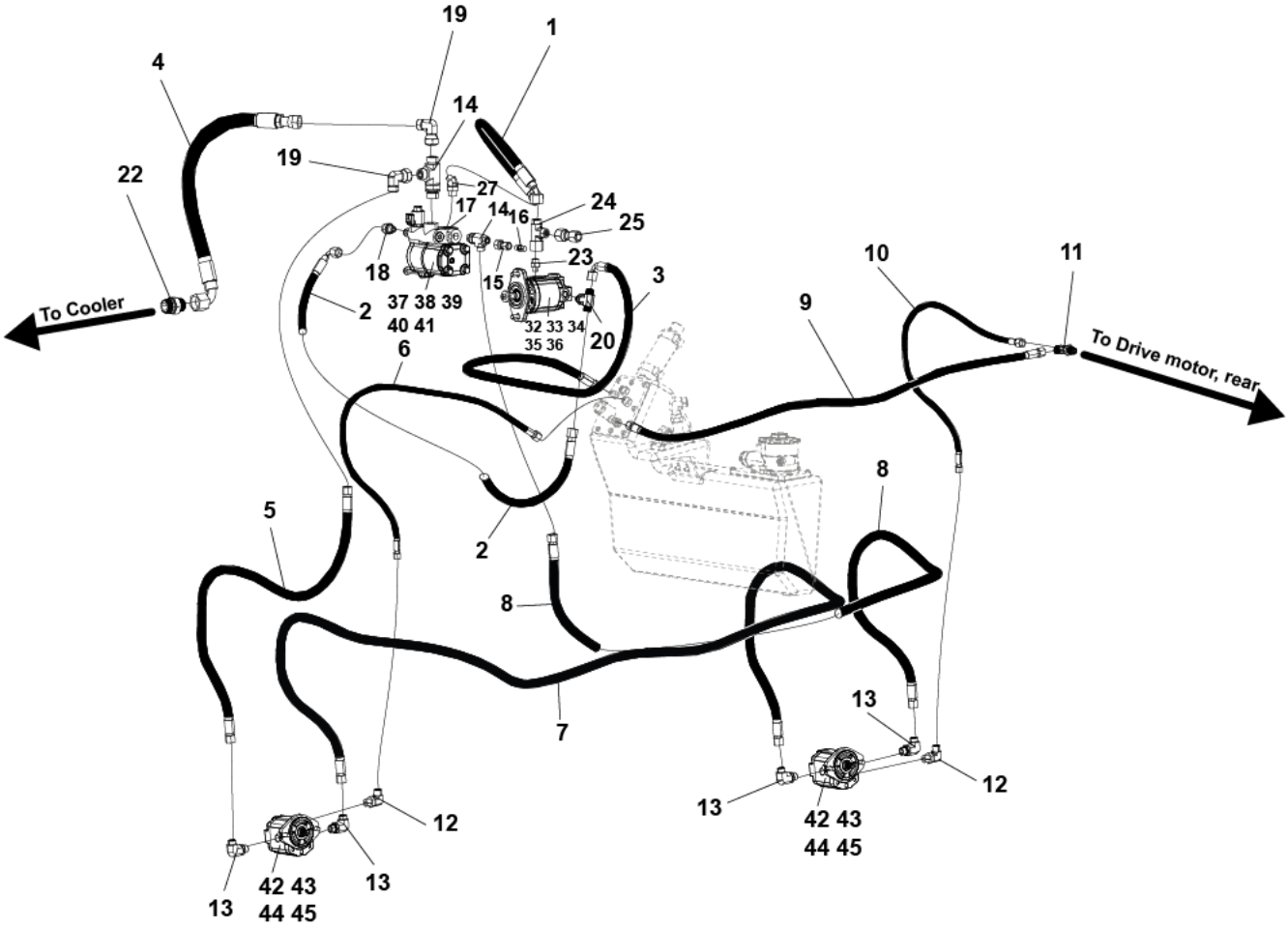

Item	Part No.	Name	Qty	L	C	SN INFO
1	4812125731	Hydraulic hose	1			
2	4812125747	Hydraulic hose	1			
3	4812125748	Hydraulic hose	1			
4	4812125750	Hydraulic hose	1			
5	4812125751	Hydraulic hose	1			
6	4812125735	Hydraulic hose	1			
7	4812126733	Hydraulic hose	1			
8	4812125752	Hydraulic hose	1			
9	4812125737	Hydraulic hose	1			
10	4812125738	Hydraulic hose	1			
11	4812114492	Bulkhead union	1			
12	4700791397	Connector	2			
13	4700791699	Adapter	4			
14	4700791792	Tee-connector	2			
15	4700792219	Straight connector	1			

Item	Part No.	Name	Qty	L	C	SN INFO
16	4700923405	Measuring fitting	1			
17	4812123298	Plug	1			
18	4700791541	Straight connector	1			
19	4700791745	Connector	2			
20	4812125653	Tee-connector	1			
21	4700791808	Elbow adapter 45	1			
22	0570702503	Straight connector	1			
23	4700791404	Straight o-ring connector	1			
24	4700791414	Tee-connector ORFS	1			
25	4700791847	Straight connector	1			
26	4700923405	Measuring fitting	1			
27	4700791416	Elbow 45, O-ring	2			
32		Hydraulic motor	1			
33	4700904229	Steel plain washer 8.4X16X1.5	2			
34	4700500021	Hexagon head screw M	2			
35	4700904735	Steel plain washer	1			
36	4700508002	Hexagon socket head cap screw M	1			
37	4812127310	Hydraulic pump	1			
38	4700379458	Gasket	1			
39	4700500078	Hex. screw	2			
40	4700904230	Plain washer M10 10.5X22X2.0	2			
41	4700902287	Nut, M10	2			
42	4812126231	Hydraulic motor	2			
43	4700603018	Washer 10x18x4	4			
44	4700508029	Cylinder screw	4			
45	4700160031	O-ring	2			

Vibration system 4812125795 Hydraulic motor

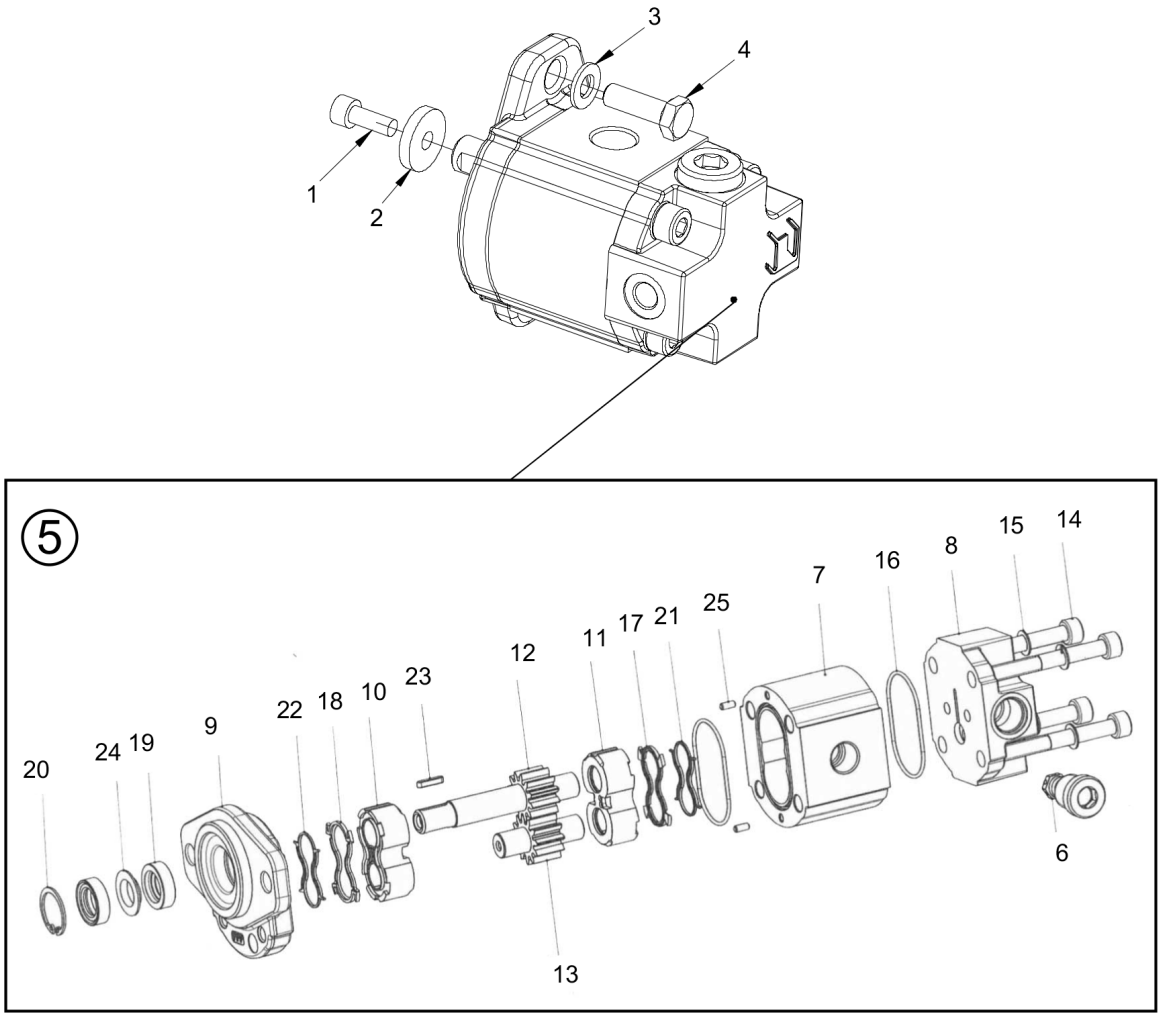

Item	Part No.	Name	Qty	L	C	SN INFO
1	4700508002	Hexagon socket head cap screw M	1			
2	4700904735	Steel plain washer	1			
3	4700904229	Steel plain washer 8.4X16X1.5	2			

Item	Part No.	Name	Qty	L	C	SN INFO
4	4700500021	Hexagon head screw M	2			
5	4812125795	Hydraulic motor	1			
6	-	Valve	1			
7	-	House	1			
8	-	Cover, rear	1			
9	-	Cover, front	1			
10	-	Plate	1			
11	-	Plate	1			
12	-	Shaft	1			
13	-	Gear	1			
14	-	Screw, M8x70	4			
15	-	Back-up washer	4			
16	-	O-ring	2			
17	-	Repair Kit	1			
18	-	Repair Kit	1			
19	4812163480	Shaft seal	2			
20	-	RING	1			
21	-	Anti-extrusion	1			
22	-	Anti-extrusion	1			
23	-	Key	1			
24	-	Back-up washer	1			
25	-	Pin	2			

Vibration system Hydraulic pump module

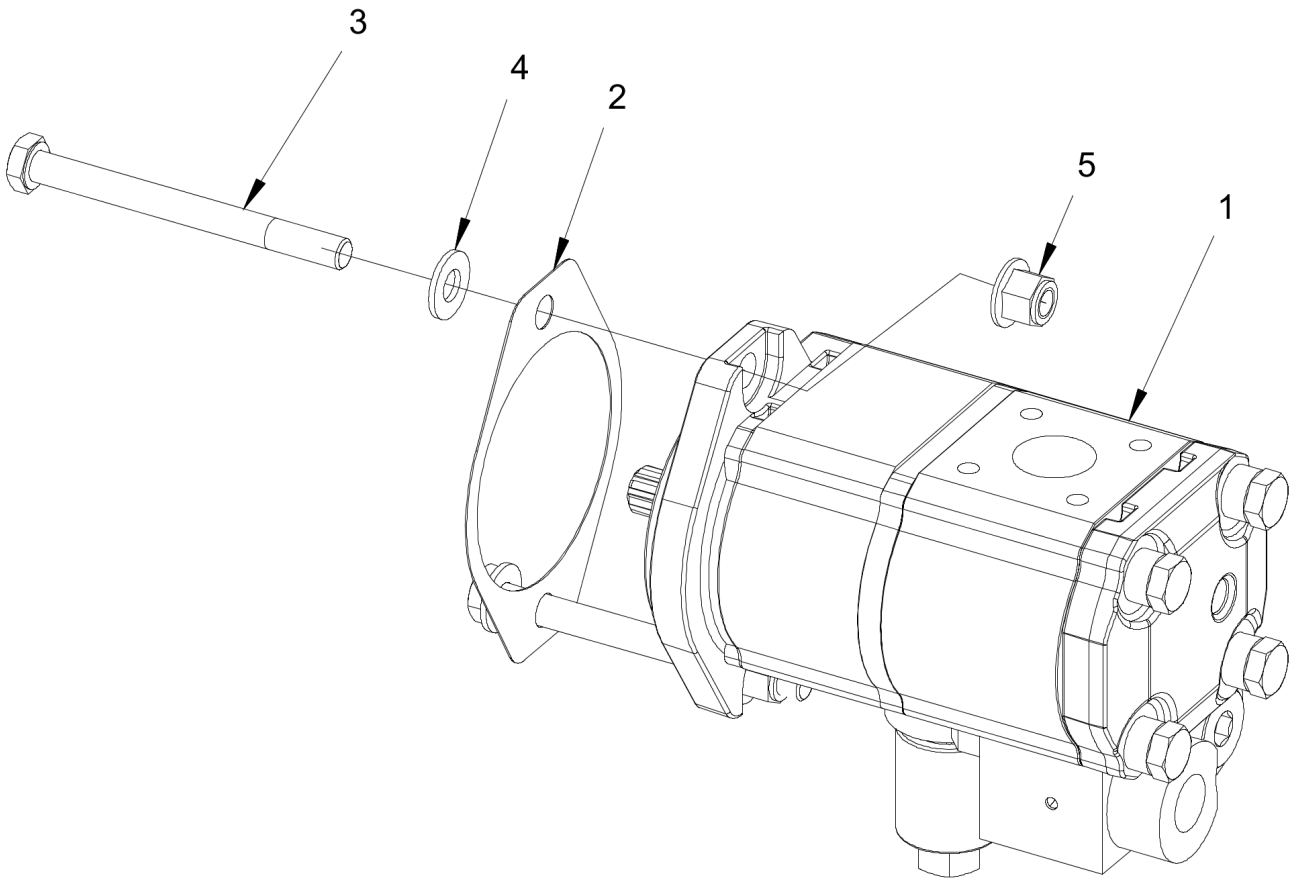

Item	Part No.	Name	Qty	L	C	SN INFO
1	4812127310	Hydraulic pump	1			
2	4700379458	Gasket	1			
3	4700500078	Hex. screw	2			

Item	Part No.	Name	Qty	L	C	SN INFO
4	4700904230	Plain washer M10 10.5X22X2.0	2			
5	4700902287	Nut, M10	2			

Vibration system 4812127310 Hydraulic pump

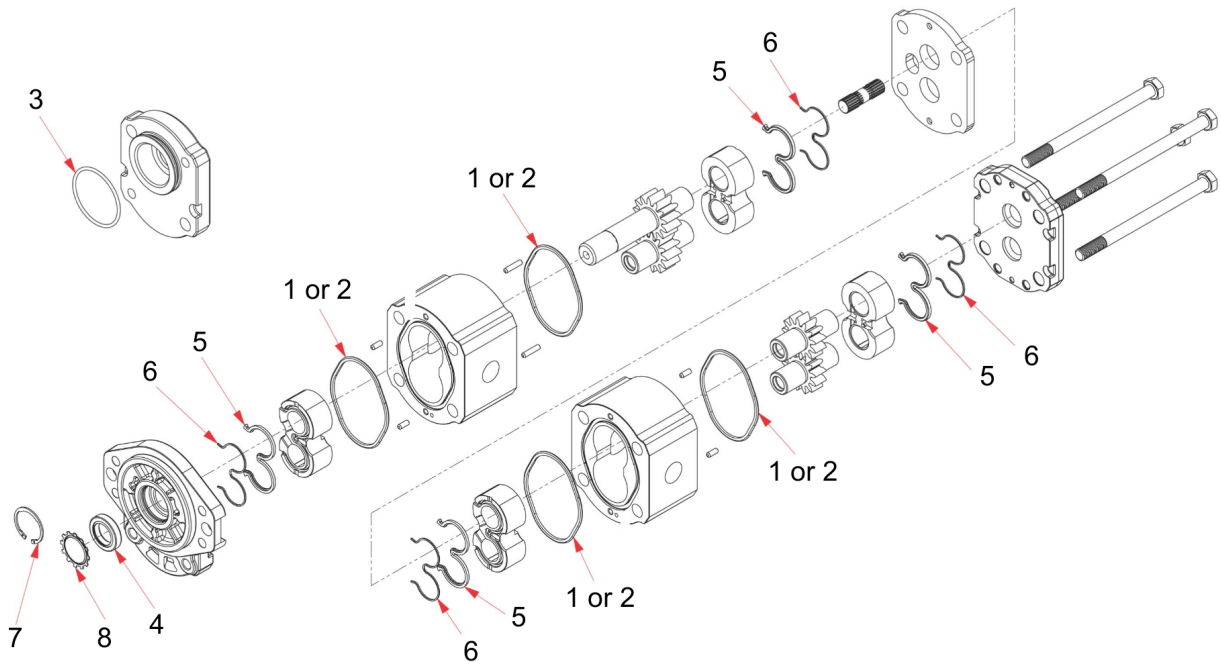

Item	Part No.	Name	Qty	L	C	SN INFO
0	4812127310	Hydraulic pump	1			
1	-	O-ring	4			
2	-	O-ring	4			

Item	Part No.	Name	Qty	L	C	SN INFO
3	-	O-ring	1			
4	-	Shaft seal	1			
5	-	Seal	4			
6	-	Back-up ring	4			
7	-	Snap ring	1			
8	-	Toothed ring	1			
20	4700903430	Seal kit	1			

Vibration system Hydraulic pump module

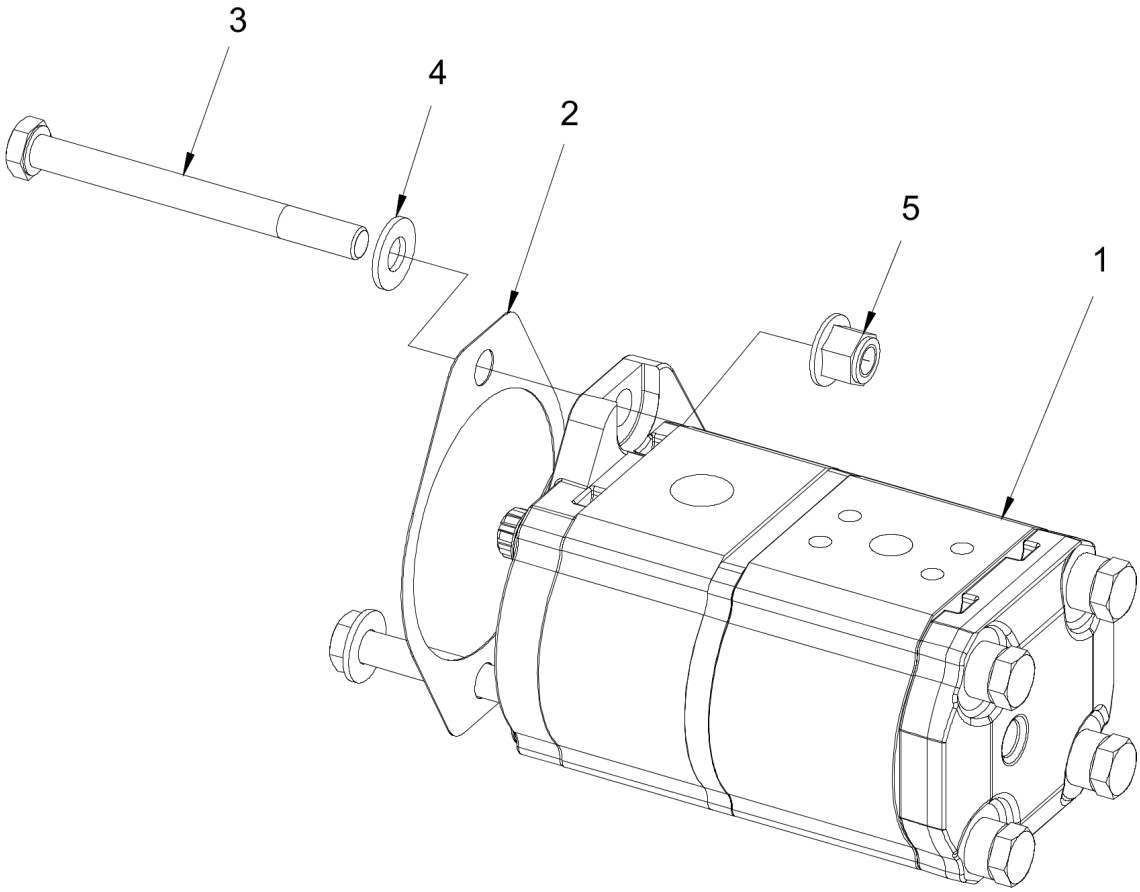

Item	Part No.	Name	Qty	L	C	SN INFO
1	4812127309	Hydraulic pump	1			
2	4700379458	Gasket	1			
3	4700500078	Hex. screw	2			

Item	Part No.	Name	Qty	L	C	SN INFO
4	4700904230	Plain washer M10 10.5X22X2.0	2			
5	4700902287	Nut, M10	2			

Vibration system 4812127309 Hydraulic pump

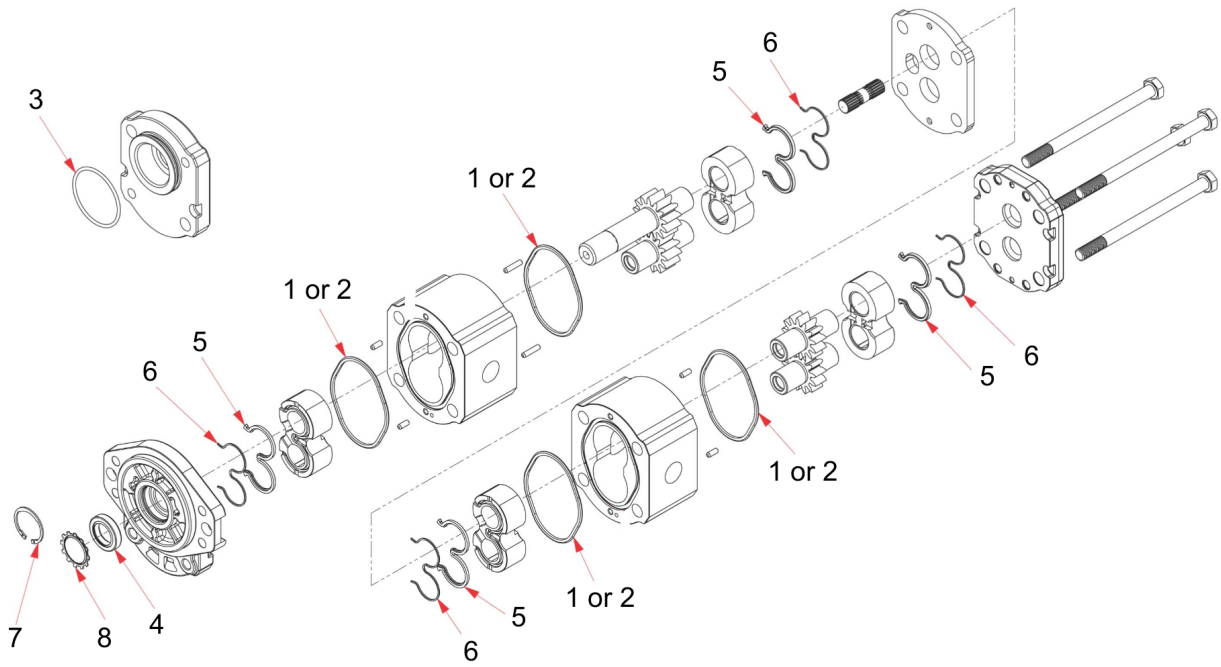

Item	Part No.	Name	Qty	L	C	SN INFO
0	4812127309	Hydraulic pump	1			
1	-	O-ring	4			
2	-	O-ring	4			

Item	Part No.	Name	Qty	L	C	SN INFO
3	-	O-ring	1			
4	-	Shaft seal	1			
5	-	Seal	4			
6	-	Back-up ring	4			
7	-	Snap ring	1			
8	-	Toothed ring	1			
20	4700903430	Seal kit	1			

Vibration system 4812125681_Hydraulic valve

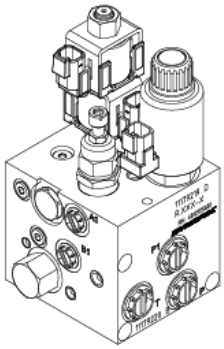

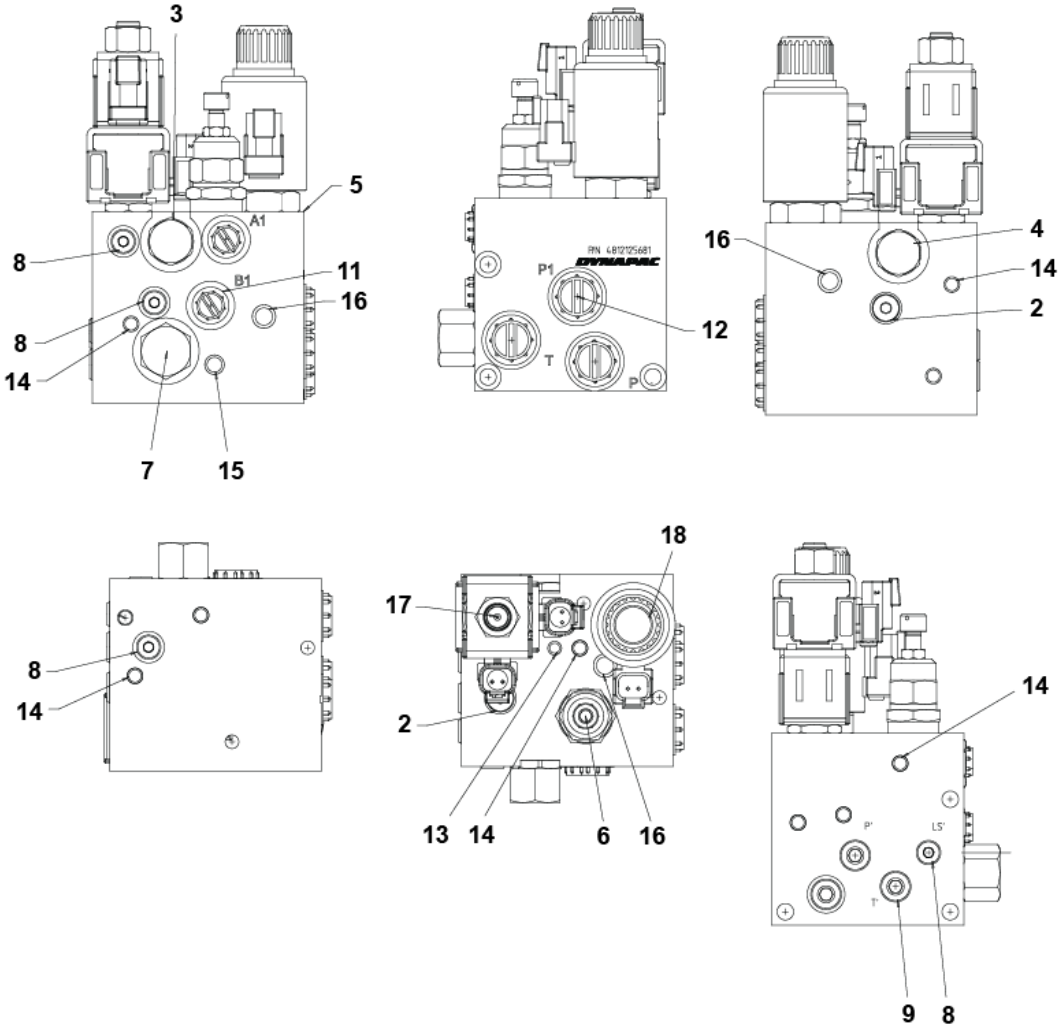

Item	Part No.	Name	Qty	L	C	SN INFO
0	4812125681	Hydraulic valve	1			
1	-	Valve, cpl.	1			
2	-	Check valve	2			

Item	Part No.	Name	Qty	L	C	SN INFO
6	4812163756	Pressure setting valve	1			
7	-	Pressure relief valve	1			
8	-	Shuttle valve	4			
9	-	Shuttle valve	3			
10	-	Orifice	2			
11	-	Plug	2			
12	-	Plug	3			
17	4812163757	Directional control valve	1			
18	4812163758	Selector valve	1			
19	4812157585	Orifice with wire 0.5 mm	1			

Propulsion system Propulsion system

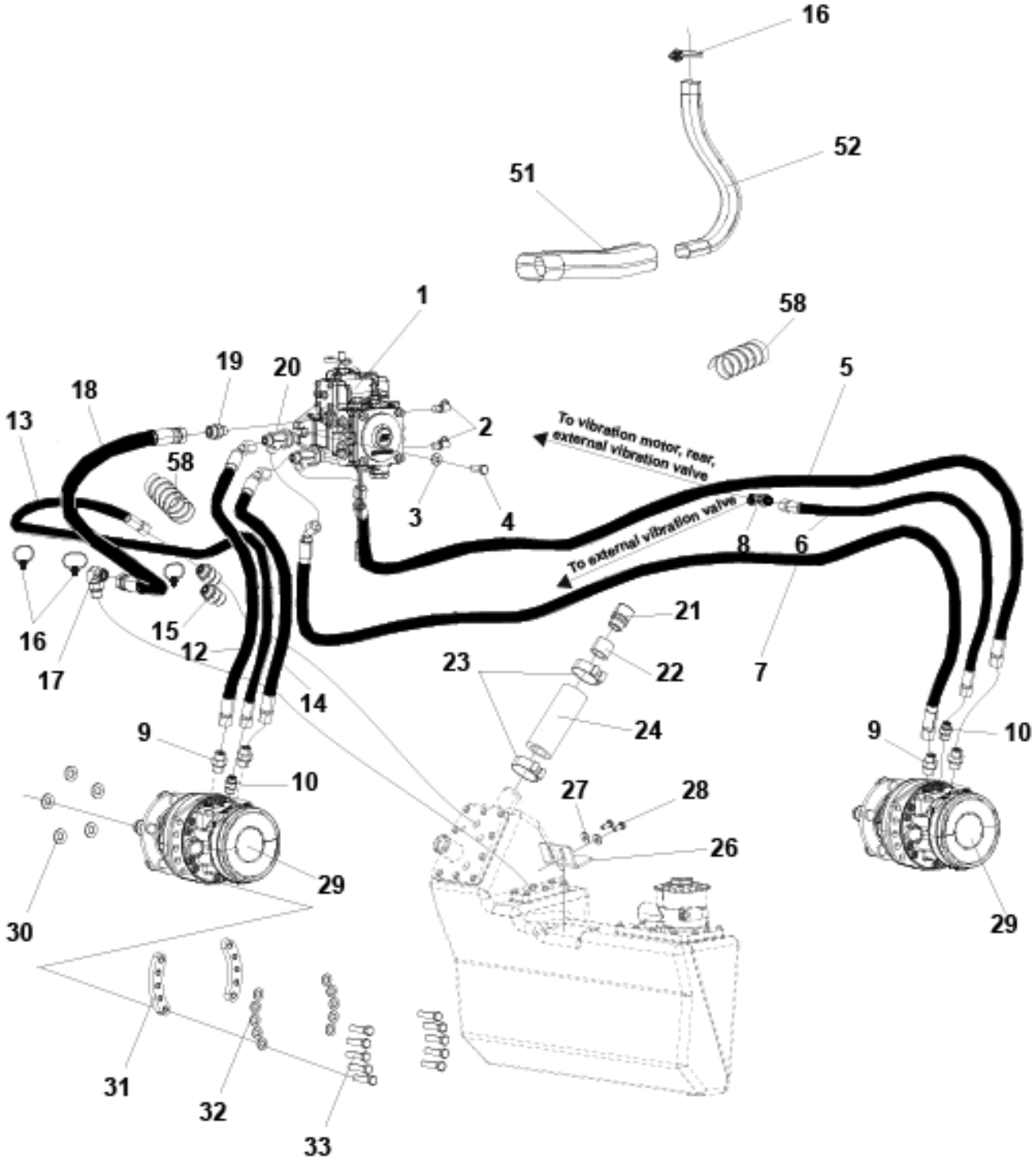

Item	Part No.	Name	Qty	L	C	SN INFO
1	4812126969	Hydraulic pump	1			
2	4700923405	Measuring fitting	2			
3	4700904703	Plain washer 13x24x4 mm	2			
4	4700500046	Hex. head screw M12x030H	2			
5	4812125712	Hydraulic hose	1			

Item	Part No.	Name	Qty	L	C	SN INFO
6	4812125714	Hydraulic hose	1			
7	4812125721	Hydraulic hose	1			
8	4812114492	Bulkhead union	1			
9	4700791410	Straight o-ring connector	4			
10	4700791828	Adapter	2			
12	4812125720	Hydraulic hose	1			
13	4812125713	Hydraulic hose	1			
14	4812125711	Hydraulic hose	1			
15	4700791828	Adapter	2			
16	4700792602	Cable Tie with Holder, Nylon Black	6			
17	4700791843	Elbow 90, O-ring with swivel	1			
18	4812125770	Hydraulic hose	1			
19	4700792074	Straight connector	1			
20	4812127214	Tee-connector	2			
21	4700357138	Ventilating filter	1			
22	4700357139	Connector	1			
23	4700313126	Clamp	2			
24	4812119321	Hydraulic hose	1			
26	4812125676	Bracket	1			
27	4700904640	Steel plain washer	2			
28	4700500053	Screw, M8x20 mm 8.8 A2K	2			
29	4812120558	Hydraulic motor	2			
30	4700904214	Washer 15x30x4 300 HV	5			
31	4812110490	Holder	4			
32	4700904231	Steel plain washer	20			
33	4700925519	Screw M12x55 10.9 GEOMET	20			
51	4700792701	Hose guard	0,32 M			
52	4700792696	Hose guard	1			
58	4700904623	Hose guard	0,15 M			

Propulsion system 4812126969 Hydraulic pump

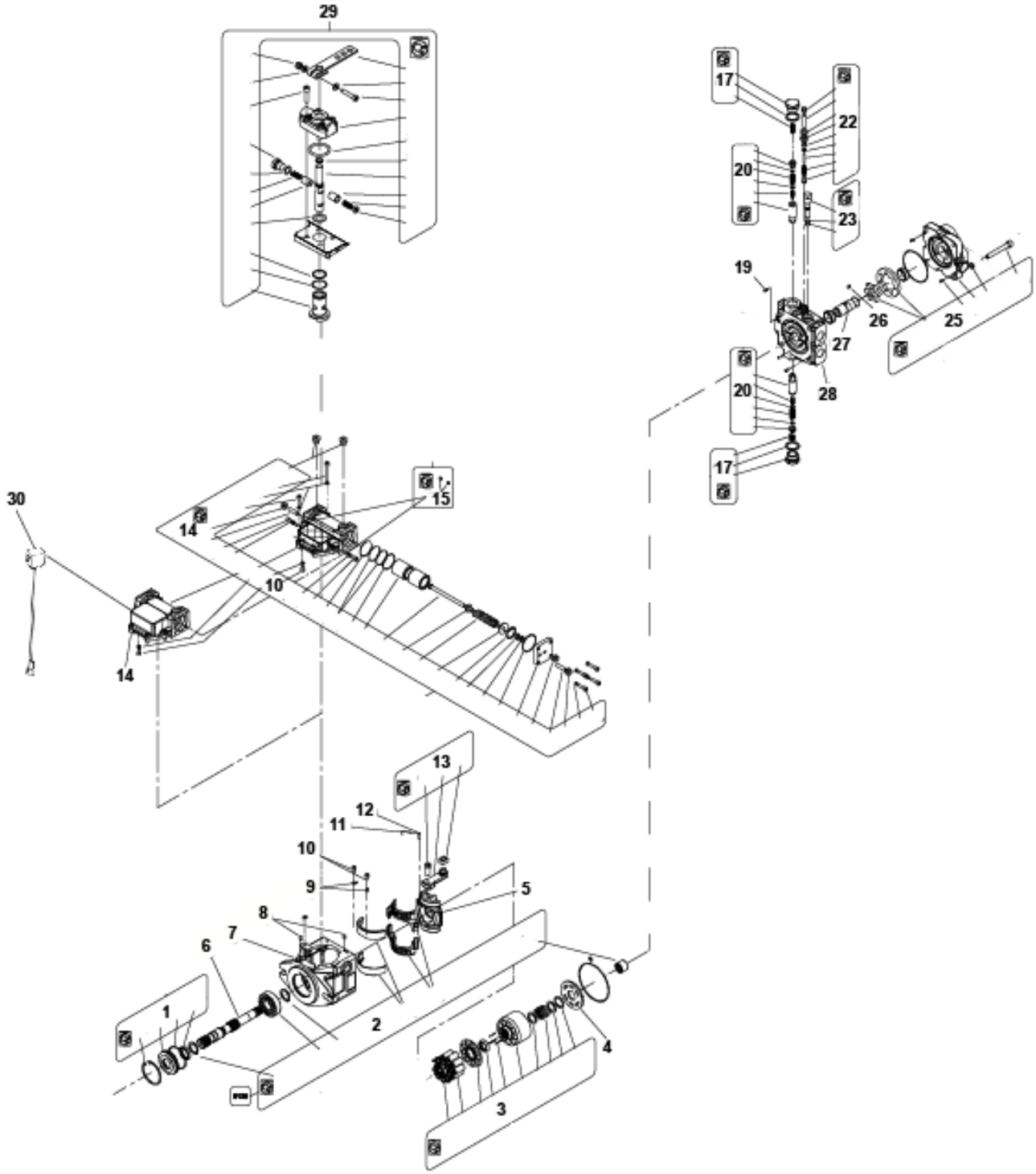

Item	Part No.	Name	Qty	L	C	SN INFO
0	4812126969	Hydraulic pump	1			
1	4812162380	Shaft seal kit	1			
2	4812162381	Bearing kit	1			
3	4812162387	Rotating group kit	1			
4	4812162452	Valve plate	1			

Item	Part No.	Name	Qty	L	C	SN INFO
5	-	Swash plate	1			
6	4812162393	Shaft	1			
7	4812162392	Housing	1			
8	-	Pin	1			
9	4812162397	Retaining ring	2			
10	4812162399	Screw	3			
11	4812162451	Retaining lever	1			
12	-	Pin	1			
13	4812162382	Block slide hydraulic kit	1			
14	4812162383	Hydraulic servo control kit	1			
15	4812162384	Restrictor kit	1			
17	4812162390	High pressure relief valve plug	1			
19	-	Pin	2			
20	4812162389	High pressure relief valve kit	2			
22	-	Low pressure relief valve kit	1			
23	-	Screw bypass kit	1			
25	4812162388	Charge pump kit	1			
26	-	Key	1			
27	-	Coupling shaft	1			
28	-	End cover	1			
29	4812162385	Direct mechanical controls with return spring	1			
30	4812162386	Mechanical servo control kit	1			

Propulsion system 4812120558 Hydraulic motor

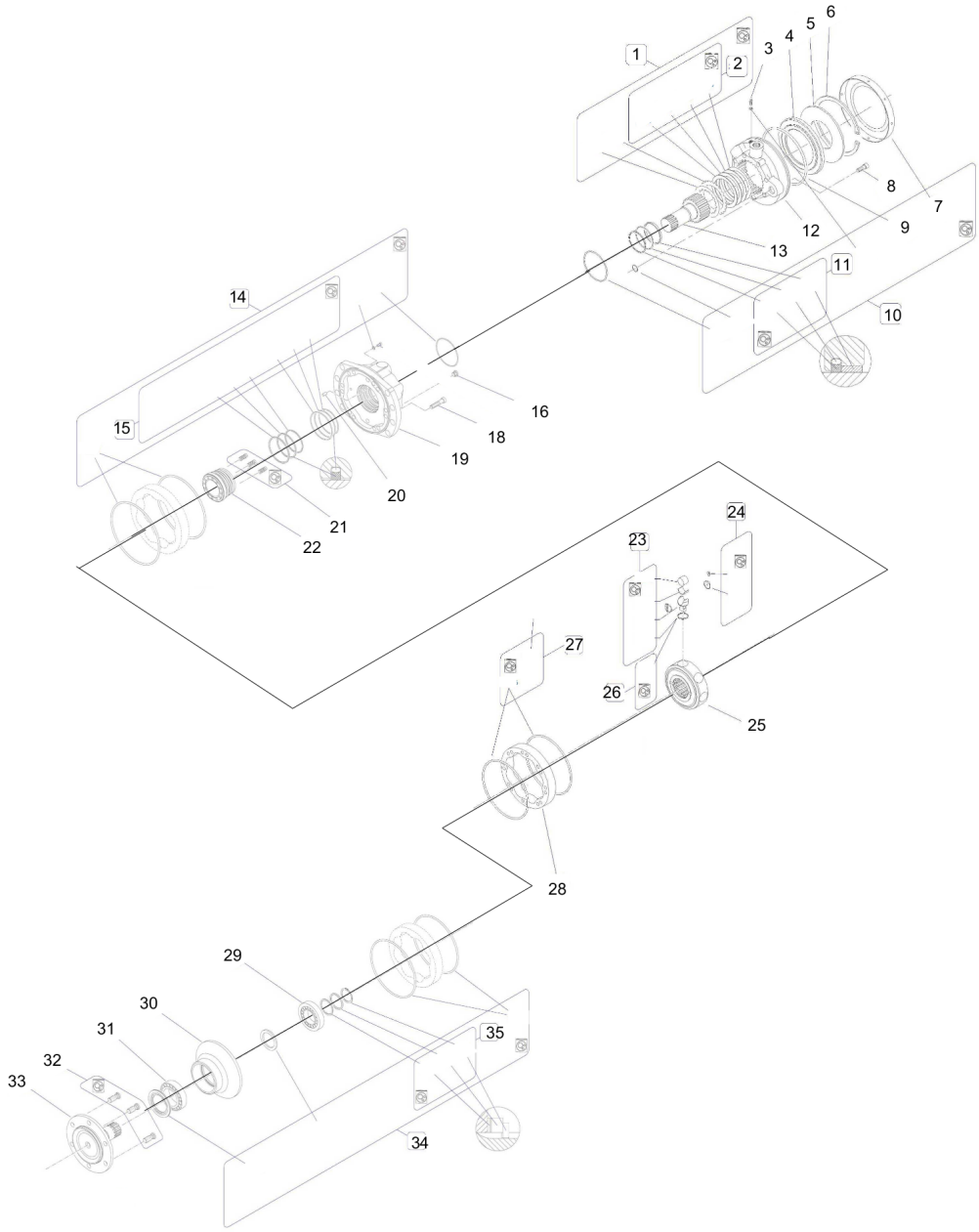

Item	Part No.	Name	Qty	L	C	SN INFO
0	4812120558	Hydraulic motor	1			
1	4812162174	Repair kit	1			
1.1	-	Brake disc	20			

Item	Part No.	Name	Qty	L	C	SN INFO
1.2	-	Brake disc	21			
2	4812162175	Shim	1			
3	4812162176	Screw	1			
4	4812162177	Brake piston	1			
5	4812162178	Washer	1			
6	4812162179	Snap ring	1			
8	4812162181	Screw	10			
10	4812160275	Repair kit	1			
7	-	Shield	1			
9	-	Repair Kit	1			
11	4812162182	Seal kit	1			
12	4812162183	Brake housing	1			
13	4812162184	Brake shaft	1			
14	4812162185	Seal kit	1			
15	4812162186	Seal kit	1			
16	4812162187	Plug	1			
18	4812162188	Screw	12			
19	4812162189	Cover	1			
20	4812162190	Pin	1			
21	4812162191	Spring kit	1			
22	4812162192	Valve	1			
23	4812162193	Piston kit	8			
24	4812162194	Repair kit	1			
25	-	Cylinder block	1			
26	4812162195	Seal	10			
27	4812162196	Seal kit	1			
27.1	-	Plug	1			
27.2	-	Repair Kit	2			
28	4812162197	Cam	1			
29	4812162198	Bearing	1			
30	4812162199	Bearing support	1			
31	4812162251	Bearing	1			
32	4812162252	Bolt kit	1			
33	4812162253	Shaft	1			
34	4812162254	Repair kit	1			
35	4812162255	Repair kit	1			

Steering system Steering system

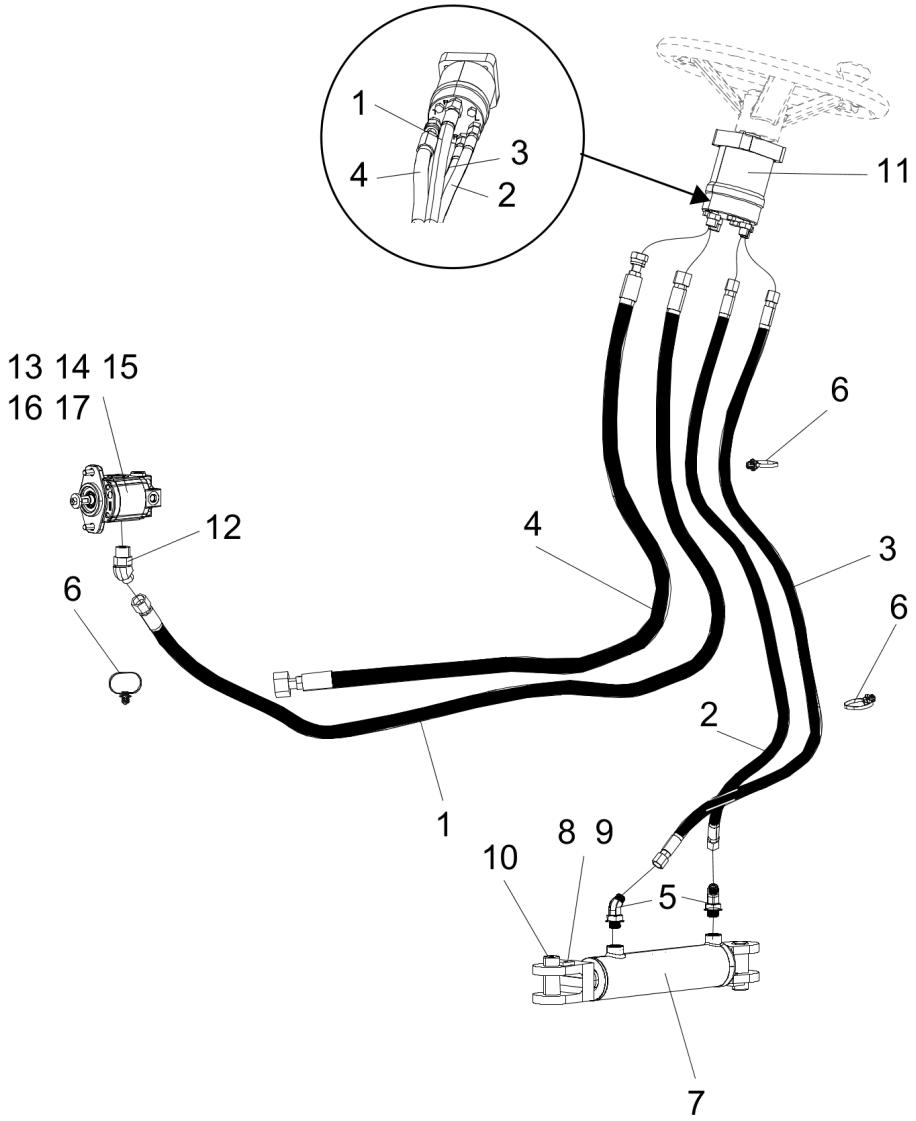

Item	Part No.	Name	Qty	L	C	SN INFO
1	4812125757	Hydraulic hose	1			
2	4812125760	Hydraulic hose	1			
3	4812125761	Hydraulic hose	1			

Item	Part No.	Name	Qty	L	C	SN INFO
4	4812125762	Hydraulic hose	1			
5	4700792389	Elbow 45 orfs	2			
6	4700792602	Cable Tie with Holder, Nylon Black	3			
7		Hydraulic cylinder	1			
8	4700904228	Steel plain washer	4			
9	4812127030	Screw	4			
10	4700926215	Protective plug	2			
11	4812112109	Steering valve	1			
-	4812160665	Special adapter 11/16"	2			
-	4812161199	Special adapter 9/16"	2			
12	4700791416	Elbow 45, O-ring	1			
13	4812125795	Hydraulic motor	1			
14	4700904229	Steel plain washer 8.4X16X1.5	2			
15	4700500021	Hexagon head screw M	2			
16	4700904735	Steel plain washer	1			
17	4700508002	Hexagon socket head cap screw M	1			

Steering system 4812125395 Hydraulic cylinder

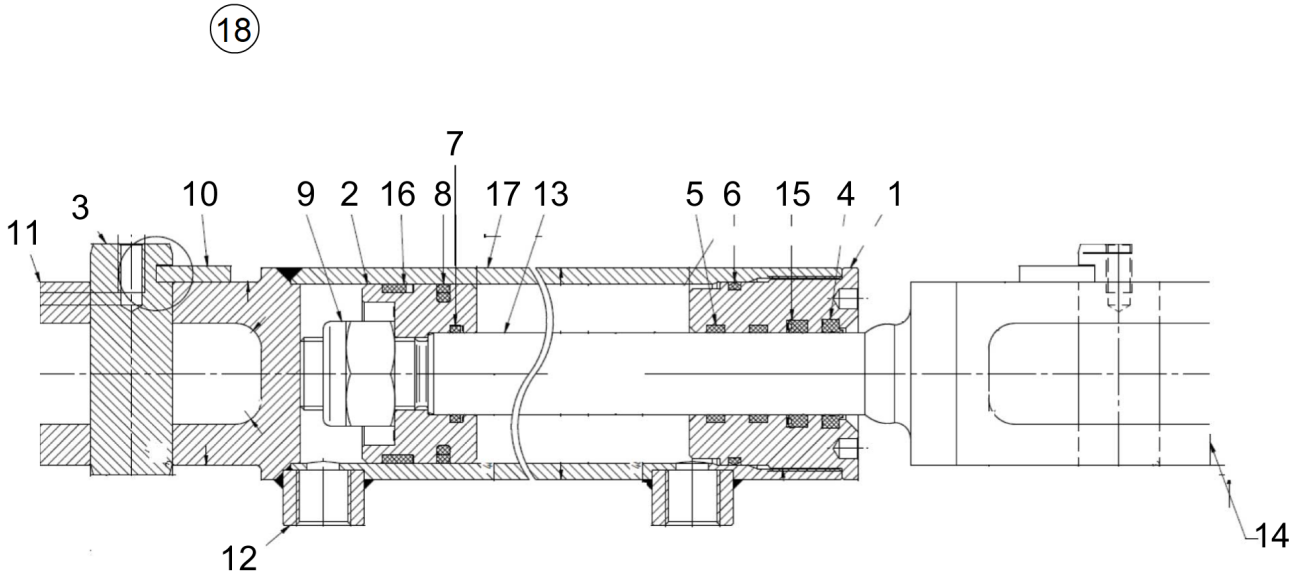

Item	Part No.	Name	Qty	L	C	SN INFO
0	4812125395	Hydraulic cylinder	1			
1	--	Sensor kit	1			
2	--	Sensor kit	1			

Item	Part No.	Name	Qty	L	C	SN INFO
3	4812163658	Pin	2			
4	--	Sensor kit	1	A		
5	--	Sensor kit	2	A		
6	--	Sensor kit	1	A		
7	--	Sensor kit	1	A		
8	--	Sensor kit	1	A		
9	--	Sensor kit	1	A		
10	4812163762	Pin lock	2			
11	--	Sensor kit	1			
12	--	Sensor kit	2			
13	--	Sensor kit	1			
14	--	Sensor kit	1			
15	--	Sensor kit	1	A		
16	--	Sensor kit	1	A		
17	--	Sensor kit	1			
18	4812162751	Seal kit	1			

Comments for Page: 4812125395 Hydraulic cylinder

(L)OCAL REMARKS

A | en_US | Included in seal kit, item 18.

Hydraulic system Brake system

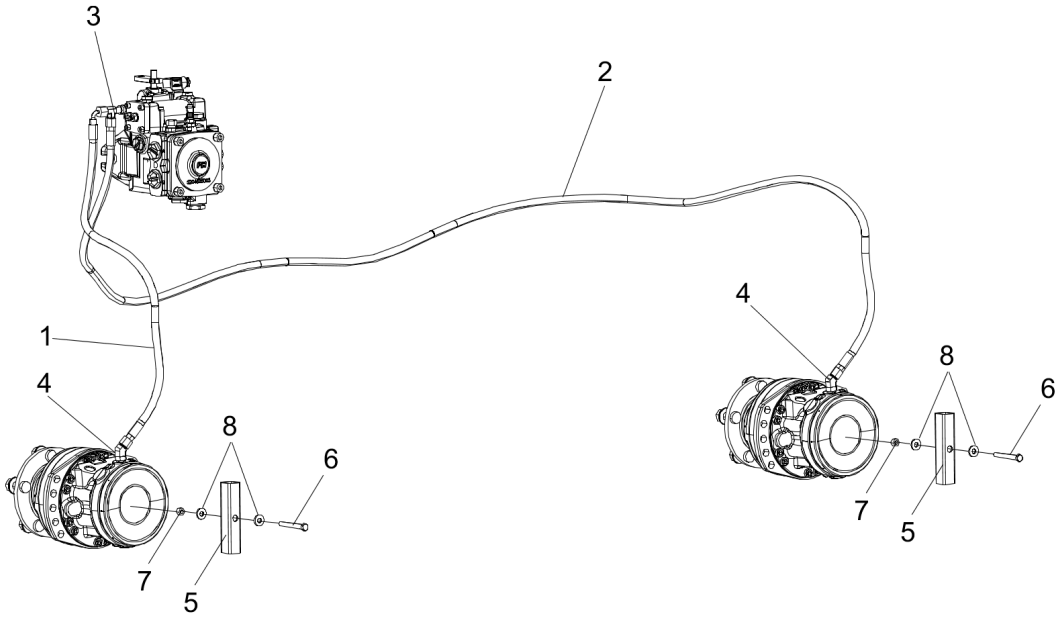

Item	Part No.	Name	Qty	L	C	SN INFO
1	4812125763	Hydraulic hose	1			
2	4812125764	Hydraulic hose	1			
3	4812121239	T-Connector	1			

Item	Part No.	Name	Qty	L	C	SN INFO
4	4812116050	Adapter	2			
5	4700357892	Stirrup	2			
6	4700792550	Screw M12x100 10.9	2			
7	4700928849	Nut	2			
8	4700904213	Steel plain washer, 13x30x4 mm HV	4			

Edge cutter (optional) Edge cutter

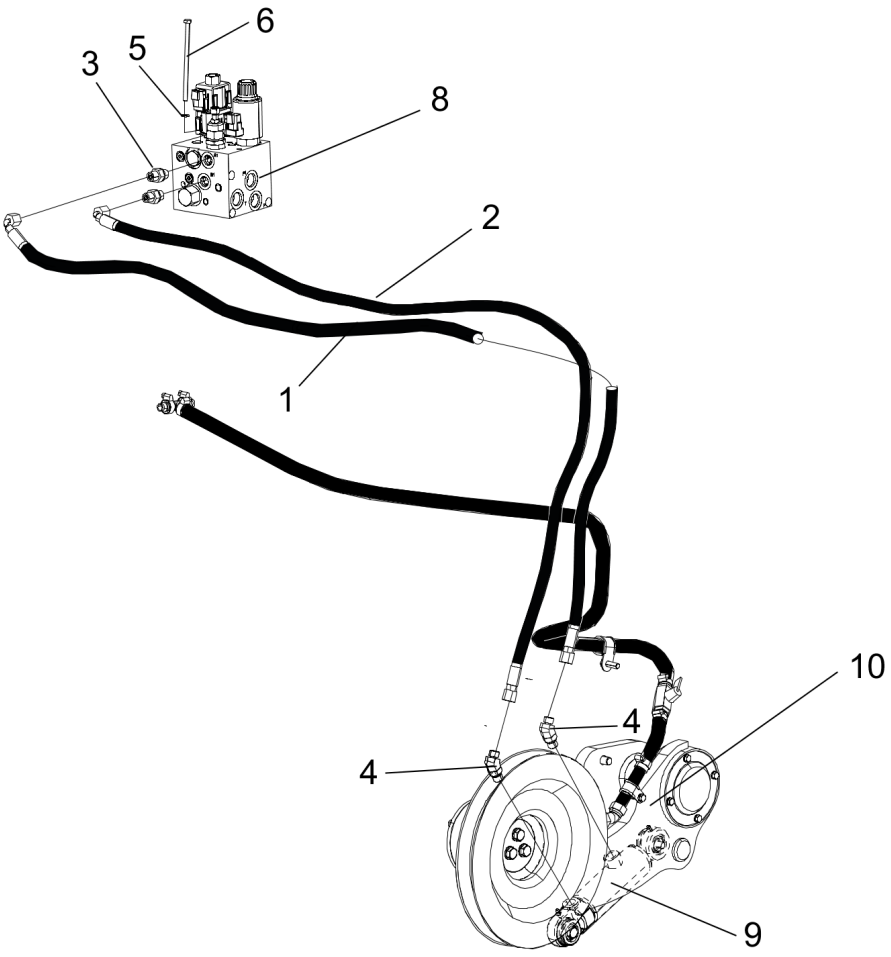

Item	Part No.	Name	Qty	L	C	SN INFO
1	4812125772	Hydraulic hose	0,46 5 M			
2	4812125773	Hydraulic hose	0,53 5 M			

Item	Part No.	Name	Qty	L	C	SN INFO
3	4700791914	Adapter	2			
4	4700792389	Elbow 45 orfs	2			
5	4700904228	Steel plain washer	2			
6	4700500062	Screw	2			
7	4700792686	Cable tie with holder	1			
8	4812125681	Hydraulic valve	1			
9	-	Hydraulic Cylinder	1			
10	-	Edge cutter	1			

Edge cutter (optional) Hydraulic cylinder module

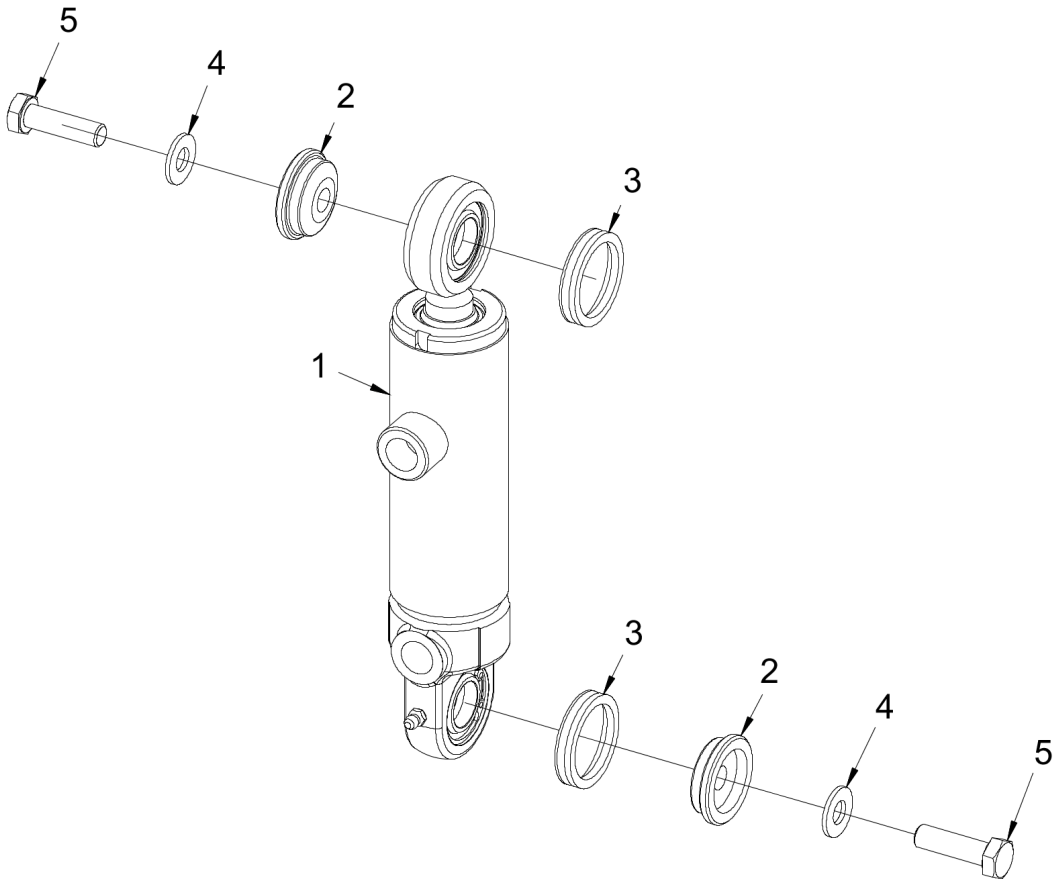

Item	Part No.	Name	Qty	L	C	SN INFO
1	4812125907	Hydraulic cylinder	1			
2	4812125937	Washer	2			
3	4700167054	Sealing	2			

Item	Part No.	Name	Qty	L	C	SN INFO
4	4700904230	Plain washer M10 10.5X22X2.0	2			
5	4700500030	Hexagon screw M	2			

Edge cutter (optional) 4812125907 Hydraulic cylinder

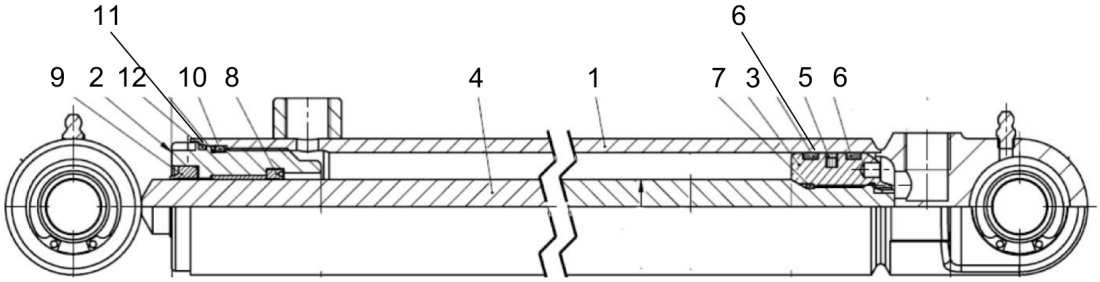

Item	Part No.	Name	Qty	L	C	SN INFO
0	4812125907	Hydraulic cylinder	1			
5	-	Piston seal	1			
6	-	Guide ring	2			

Item	Part No.	Name	Qty	L	C	SN INFO
7	-	O-ring	1			
8	-	ROD SEAL	1			
9	-	Scraper	1			
10	-	O-ring	1			
11		Backup ring	1			
12	-	O-ring	1			

Hydraulic system Flow divider

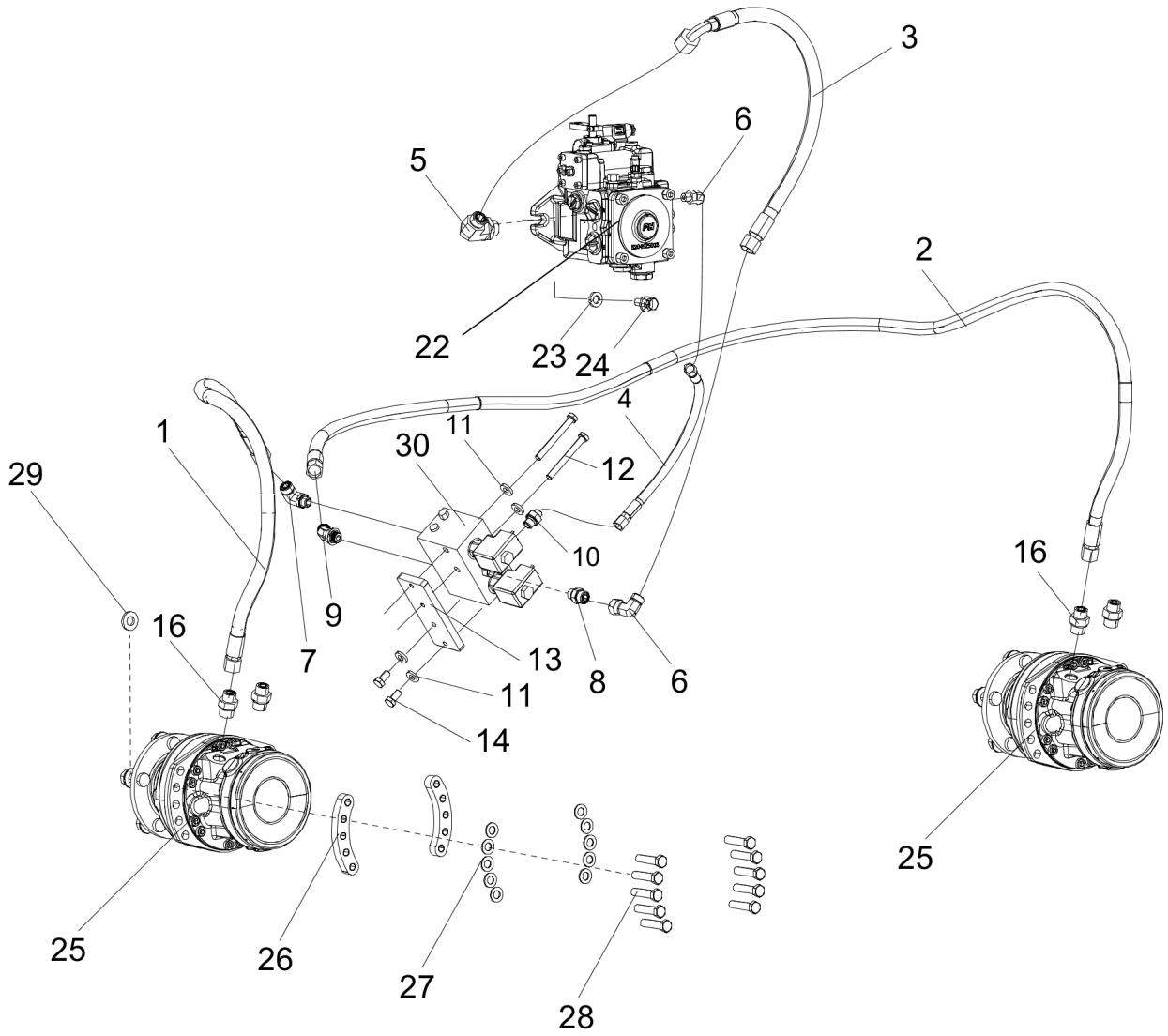

Item	Part No.	Name	Qty	L	C	SN INFO
1	4812125724	Hydraulic hose	1			
2	4812125725	Hydraulic hose	1			
3	4812125726	Hydraulic hose	1			

Item	Part No.	Name	Qty	L	C	SN INFO
4	4812125727	Hydraulic hose	1			
5	4700792068	Elbow 90°	1			
6	4700791415	Elbow 45, O-ring	2			
7	4700791845	Elbow 90, O-ring with swivel	1			
8	4700904727	Adapter	1			
9	4812122719	Elbow 45	1			
10	4700791452	Lock handle	1			
11	4700904557	Steel plain washer	4			
12	4700500077	Hexagon head screw M10x90	2			
13	4812125470	Bracket	1			
14	4700500048	Hex. Head screw	2			
16	4700791410	Straight o-ring connector	4			
22	4812126969	Hydraulic pump	1			
23	4700904703	Plain washer 13x24x4 mm	2			
24	4700500037	Hexagon head screw M12X035H 8.8 A3K	2			
25	4812120558	Hydraulic motor	2			
26	4812110490	Holder	2			
27	4700904231	Steel plain washer	10			
28	4700925519	Screw M12x55 10.9 GEOMET	10			
29	4700904214	Washer 15x30x4 300 HV	5			
30	4700358003	Flow divider	1			

Hydraulic system Chip spreader (option)

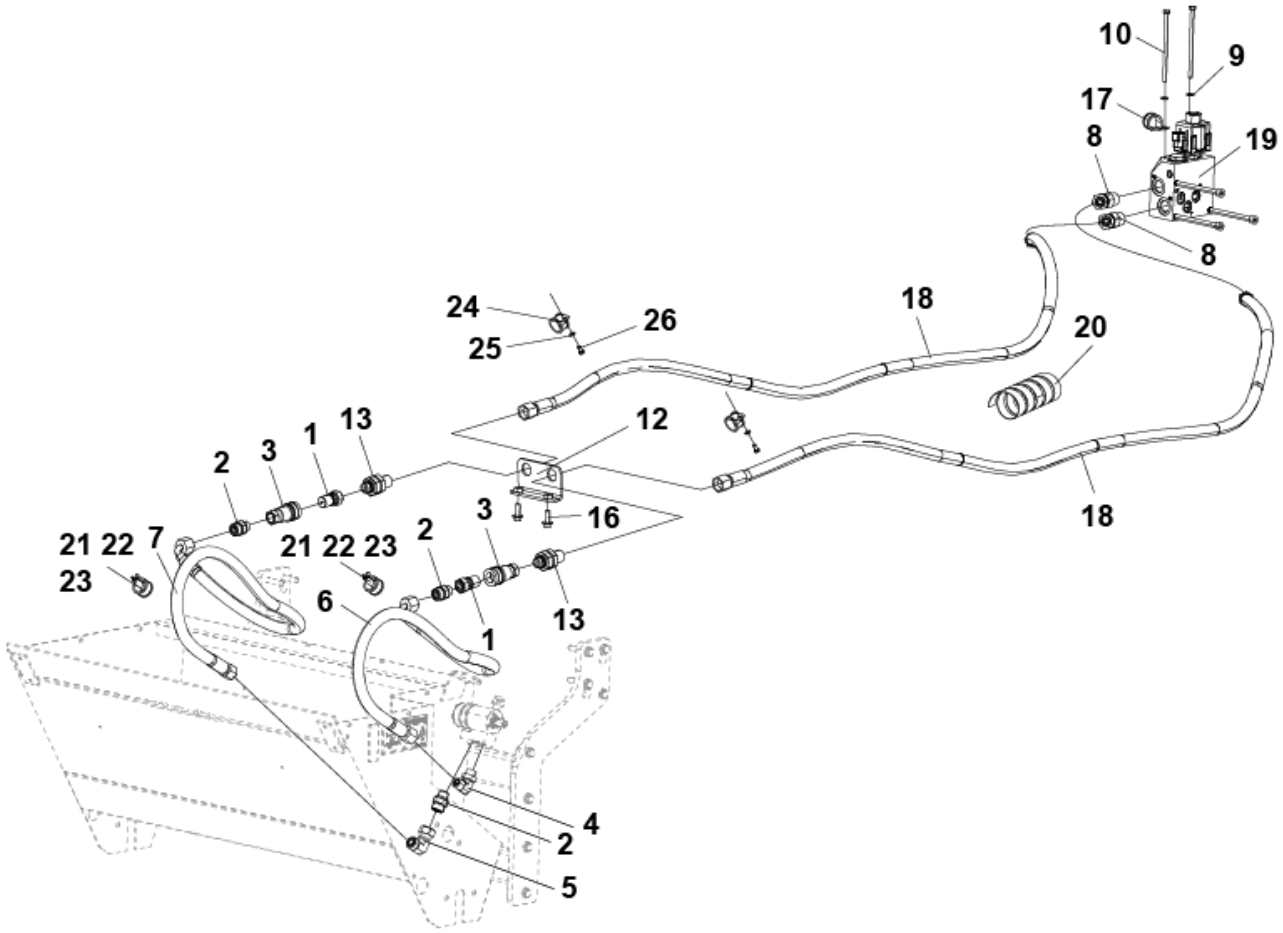

Item	Part No.	Name	Qty	L	C	SN INFO
1	4700792822	Quick disconnect coupling	1			
2	4700904727	Adapter	3			
3	4700792046	Quick disconnect coupling	1			
4	4700791398	Elbow 90, O-ring	1			
5	4700791745	Connector	1			
6	4812125866	Hydraulic hose	1			
7	4812126711	Hydraulic hose	1			
8	4700792436	Elbow 45°	2			
9	4700904228	Steel plain washer	2			
10	4700500062	Screw	2			
12	4812125664	Bracket	1			
13	4812125859	Connector	2			
14	4700792046	Quick disconnect coupling	1			
15	4700792822	Quick disconnect coupling	1			

Item	Part No.	Name	Qty	L	C	SN INFO
16	4700500505	Hexagon screw M8X20 8.8 A2K	2			
17	4700921036	Clamp	1			
18	4812125778	Hydraulic hose	2			
19	4812125682	Hydraulic valve	1			
20	4700904623	Hose guard	0,15 M			
21	4700921028	Pipe clamp	2			
22	4700904281	Steel plain washer	2			
23	4700500003	Hex. screw	2			
24	4700921028	Pipe clamp	2			
25	4700904281	Steel plain washer	2			
26	4700500003	Hex. screw	2			
27	4812124515	Rubber part	2			

Hydraulic system 4812125682_Hydraulic valve

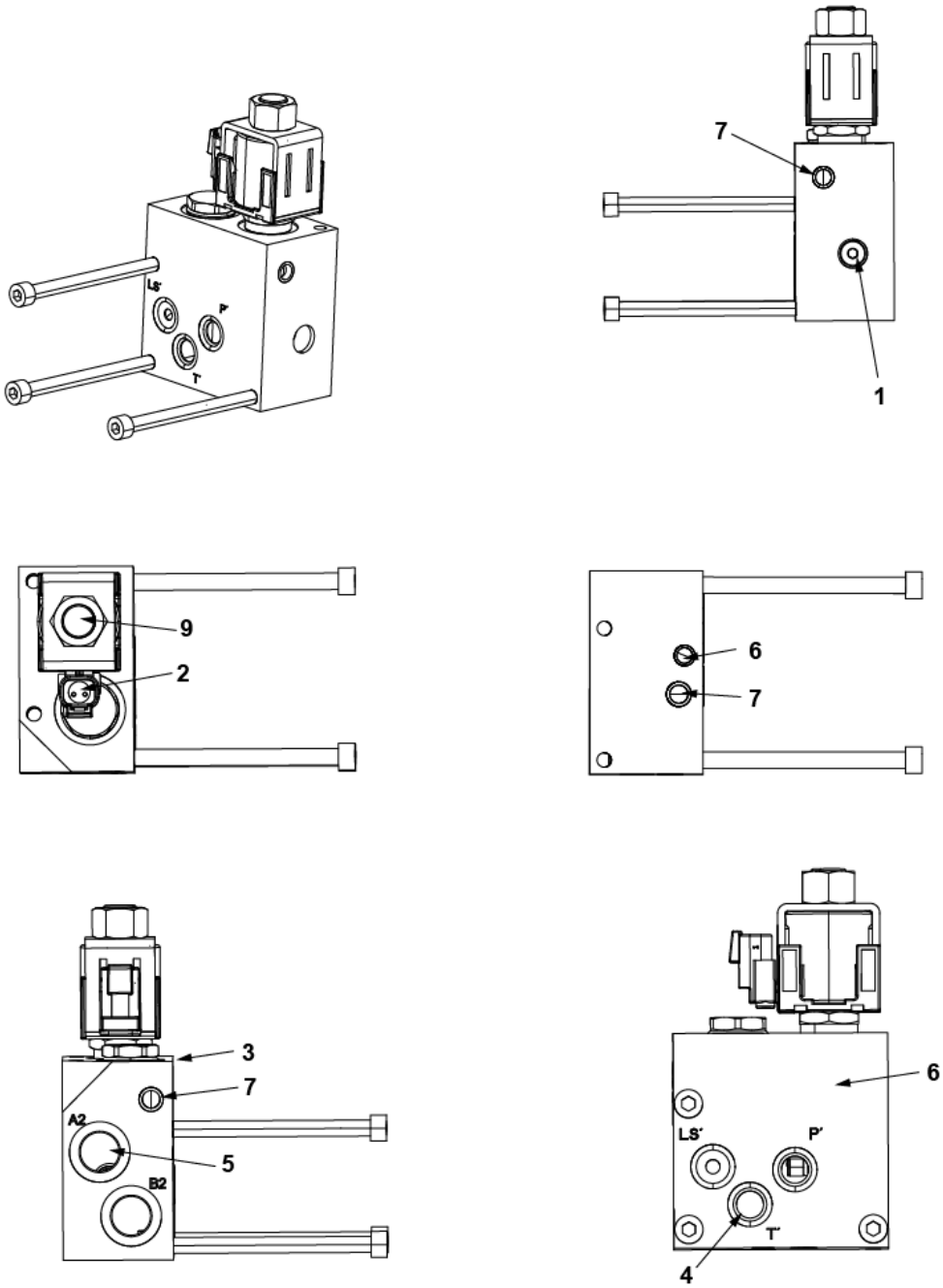

Item	Part No.	Name	Qty	L	C	SN INFO
0	4812125682	Hydraulic valve	1			
2	4812163263	Check valve	1			
9	-	Vibration valve	1			

Item	Part No.	Name	Qty	L	C	SN INFO
20	4812163752	Seal kit	1			

Circuit board and fuses up to xA026340 Circuit board and fuses

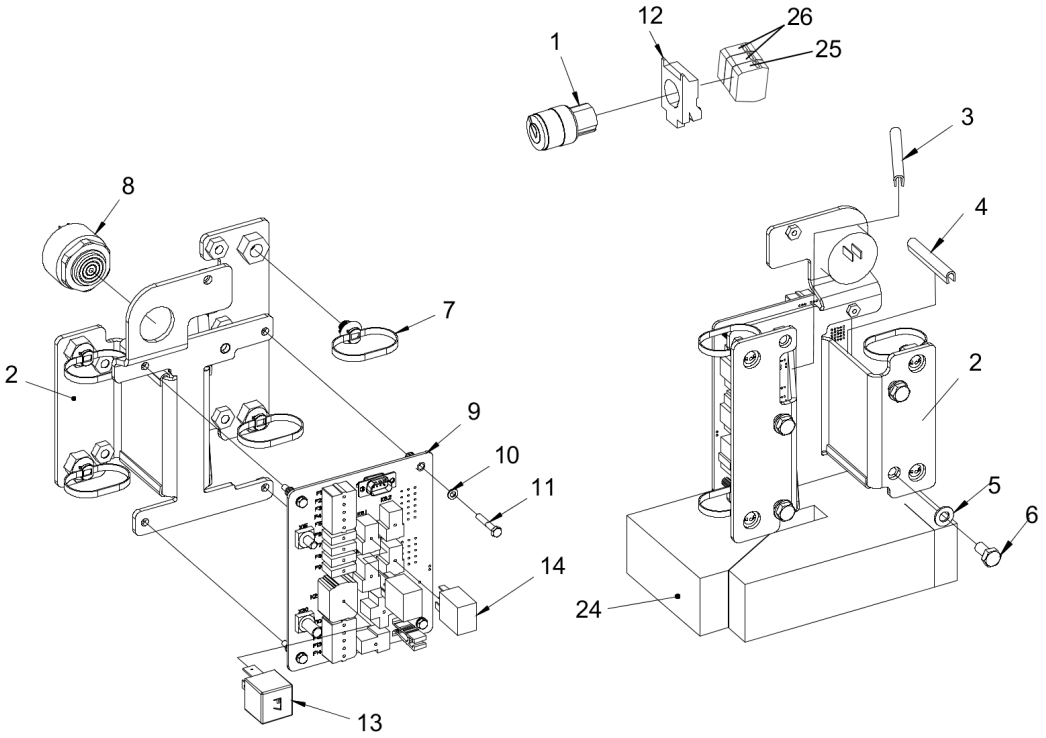

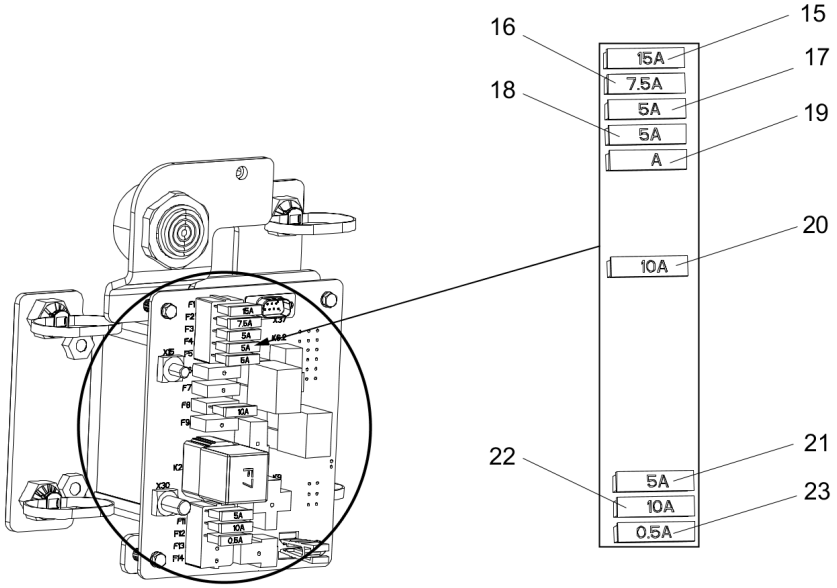

Item	Part No.	Name	Qty	L	C	SN INFO
1	4811000333	Ignition switch	1			
1.1	4700902866	Key "455"	1			
2	4812126033	Bracket	1			

Item	Part No.	Name	Qty	L	C	SN INFO
3	4700202028	Edge trim	0,073 M			
4	4700202028	Edge trim	0,059 M			
5	4700904229	Steel plain washer 8.4X16X1.5	4			
6	4700500019	Hexagon head screw M	4			
7	4700792602	Cable Tie with Holder, Nylon Black	4			
8	4700385599	Buzzer	1			
9	4812126176	Circuit board	1			
10	4700904698	Plain washer	4			
11	4700904312	Screw	4			
12	4700791733	Fixing collar	1			
13	4812126108	Relay	1			
14	4700381390	Relay	2			
15	4700901228	Fuse 15A Blue	1			
16	4700901226	Fuse 7.5A Brown	1			
17	4700901225	Fuse 5A Tan	1			
18	4700901225	Fuse 5A Tan	1			
19	4700901224	Fuse, 3A Violet	1		B	
19	4700901225	Fuse 5A Tan	1		A	
20	4700901227	Fuse 10A Red	1			
21	4700901225	Fuse 5A Tan	1			
22	4700901227	Fuse 10A Red	1			
23	4812127367	Fuse 1A Black	1			
24	4812129618	Celluar rubber	1			
25	4700791736	Connector	1			
26	4700791723	Connector	2			

Comments for Page: Circuit board and fuses

A) D1703

B) D1803

Circuit board and fuses From xA026341 Circuit board and fuses

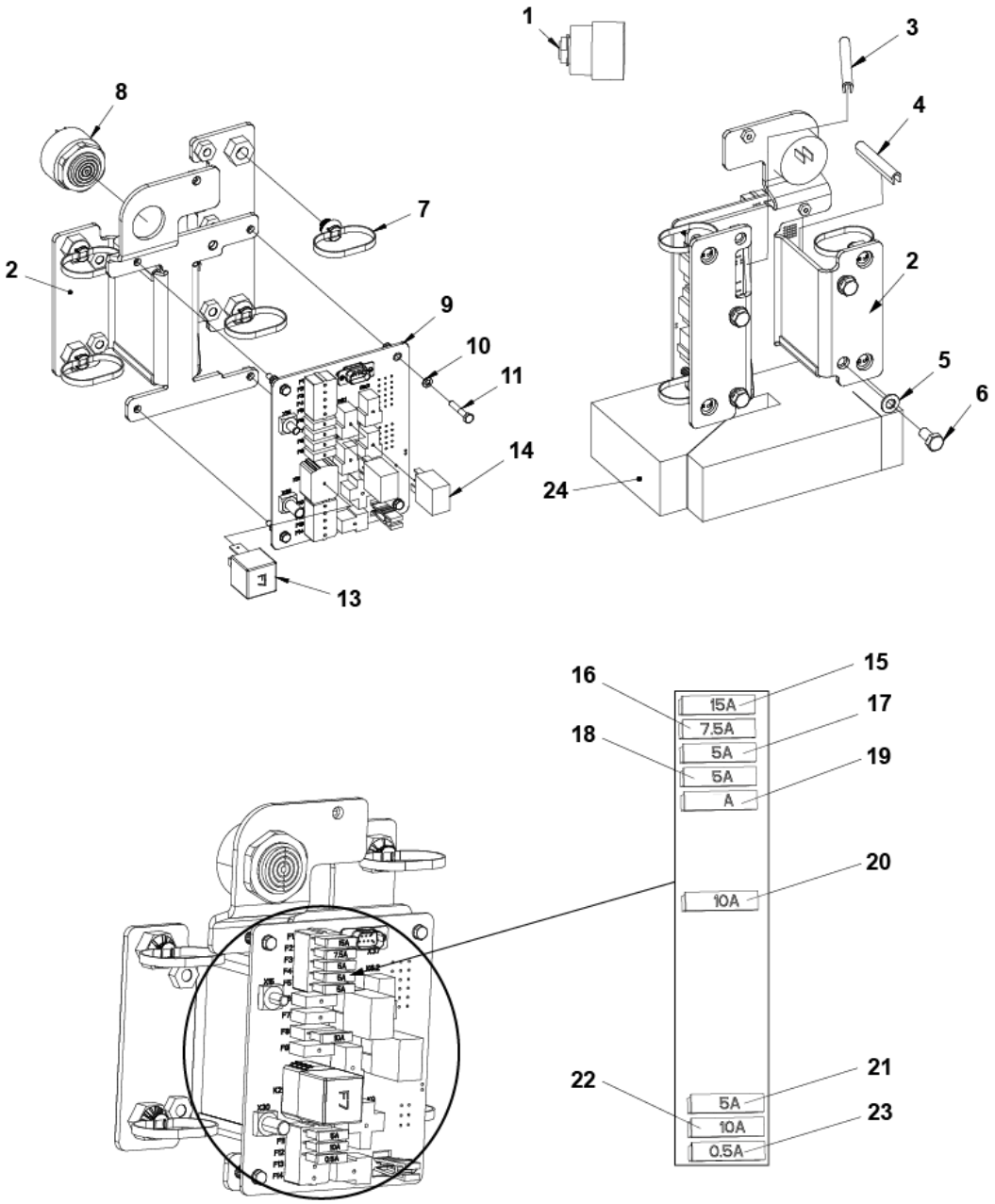

Item	Part No.	Name	Qty	L	C	SN INFO
1	4812110901	Ignition switch	1			
1.1	4700902866	Key "455"	1			
2	4812126033	Bracket	1			

Item	Part No.	Name	Qty	L	C	SN INFO
3	4700202028	Edge trim	0,073 M			
4	4700202028	Edge trim	0,059 M			
5	4700904229	Steel plain washer 8.4X16X1.5	4			
6	4700500019	Hexagon head screw M	4			
7	4700792602	Cable Tie with Holder, Nylon Black	4			
8	4700385599	Buzzer	1			
9	4812126176	Circuit board	1			
10	4700904698	Plain washer	4			
11	4700904312	Screw	4			
13	4812126108	Relay	1			
14	4700381390	Relay	2			
15	4700901228	Fuse 15A Blue	1			
16	4700901226	Fuse 7.5A Brown	1			
17	4700901225	Fuse 5A Tan	1			
18	4700901225	Fuse 5A Tan	1			
19	4700901224	Fuse, 3A Violet	1		B	
19	4700901225	Fuse 5A Tan	1		A	
20	4700901227	Fuse 10A Red	1			
21	4700901225	Fuse 5A Tan	1			
22	4700901227	Fuse 10A Red	1			
23	4812127367	Fuse 1A Black	1			
24	4812129618	Celluar rubber	1			
25	4700791736	Connector	1			
26	4700791723	Connector	2			

Comments for Page: Circuit board and fuses

A) D1703

B) D1803

Electrical equipment Backup alarm module

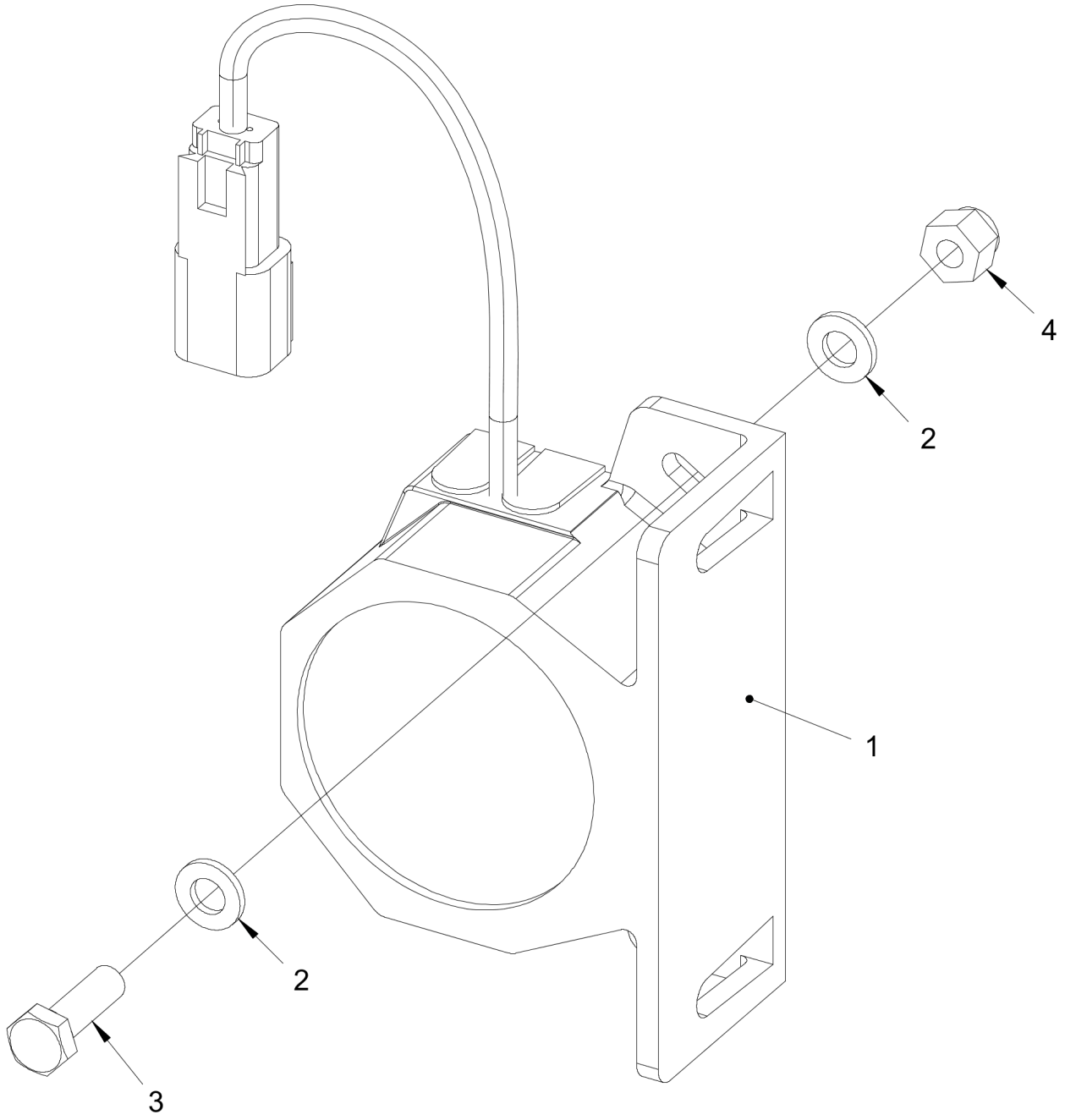

Item	Part No.	Name	Qty	L	C	SN INFO
1	4700792098	Back-up alarm	1			
2	4700904228	Steel plain washer	4			
3	4700500040	Screw, M6x20 mm 8.8 A2K	2			

Item	Part No.	Name	Qty	L	C	SN INFO
4	4700586002	Lock nut M	2			

Electrical equipment Backup alarm, 87 db(A) (Option / Quacker)

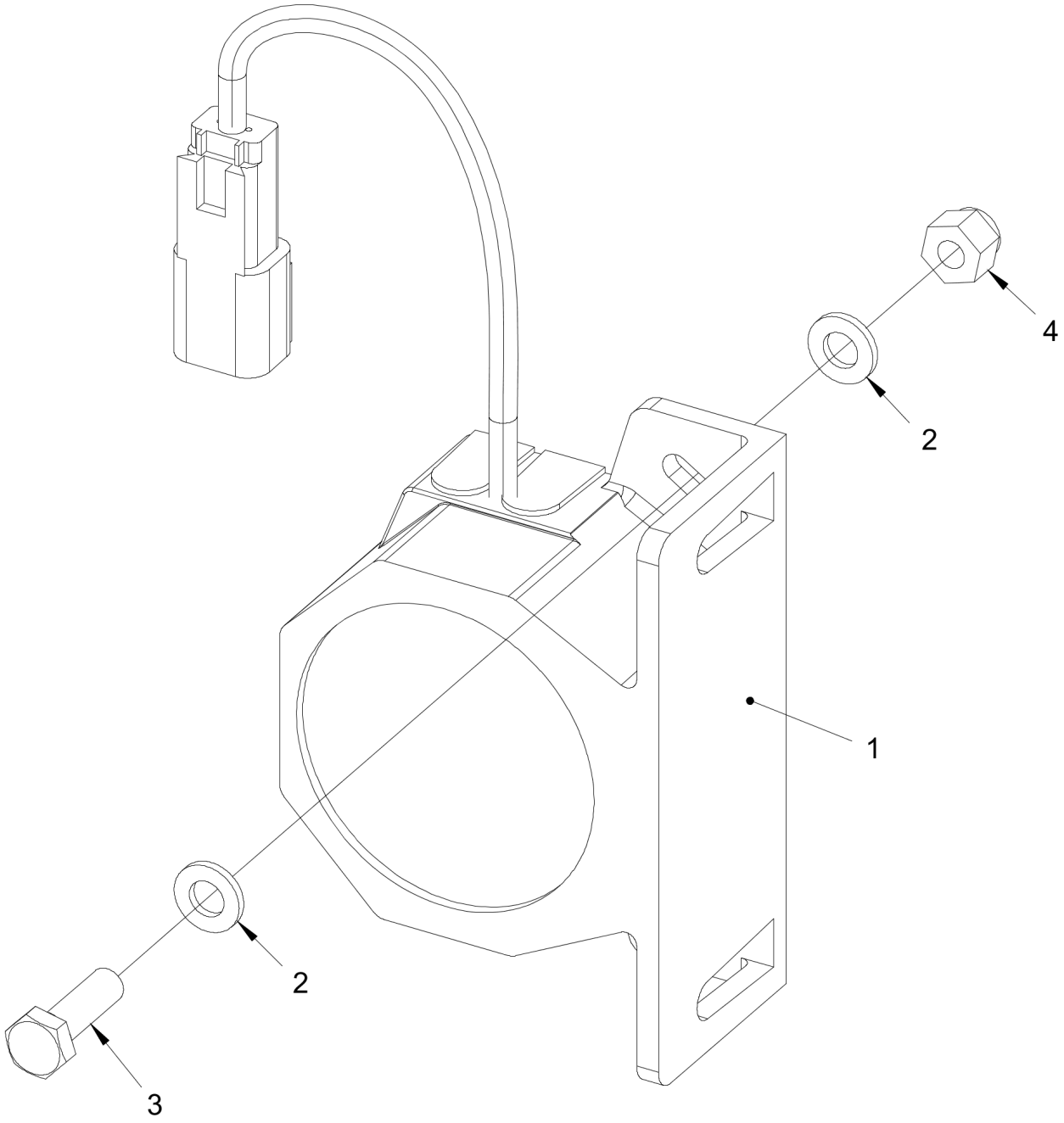

Item	Part No.	Name	Qty	L	C	SN INFO
1		Back-up alarm	1			
2	4700904228	Steel plain washer	4			
3	4700500040	Screw, M6x20 mm 8.8 A2K	2			

Item	Part No.	Name	Qty	L	C	SN INFO
4	4700586002	Lock nut M	2			

Cable harness - Main up to xA026340 Cable harness

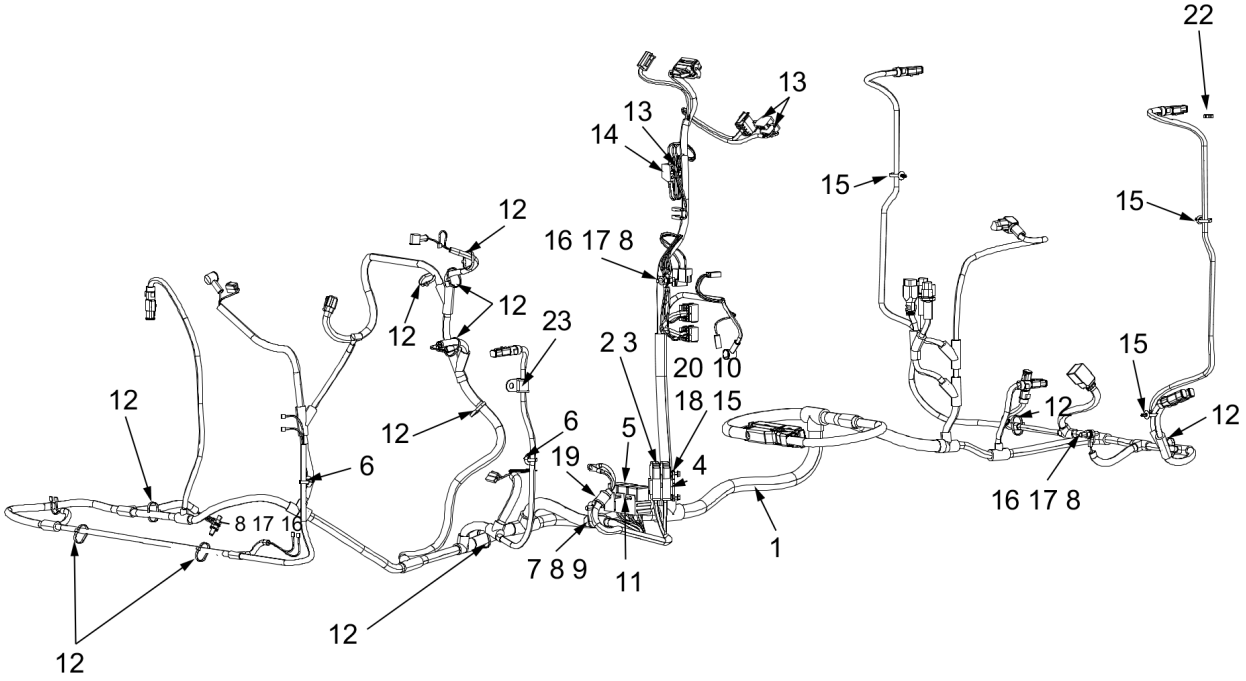

Item	Part No.	Name	Qty	L	C	SN INFO
1	4812125260	Cable harness	1			
2	4700904038	Fuse 40A Orange	1			
3	4700904039	Fuse 50A Red	1			

Item	Part No.	Name	Qty	L	C	SN INFO
4	4700904036	Bracket	1			
5	4700903956	Relay	3			
6	4700792441	Cable tie with holder	2			
7	4700960727	Clamp	1			
8	4700904229	Steel plain washer 8.4X16X1.5	7			
9	4700500019	Hexagon head screw M	1			
10	4700904281	Steel plain washer	2			
11	4700903782	Screw M5x12	3			
12	4700313041	Cable tie	N			
13	4700791723	Connector	4			
14	4700791736	Connector	1			
15	4812115911	Cable tie with holder	3			
16	4700570005	Hexagon nut M	6			
17	4700903768	Threaded stud	3			
18	4700570003	Hex. nut	2			
19	4700904346	Pipe clamp covered	1			
20	4812117868	Screw M05x16	2			
22	4700573005	Hexagon thin nut M	2			
23	4700921080	Clamp	1			

Cable harness - Main From xA026341 Cable harness

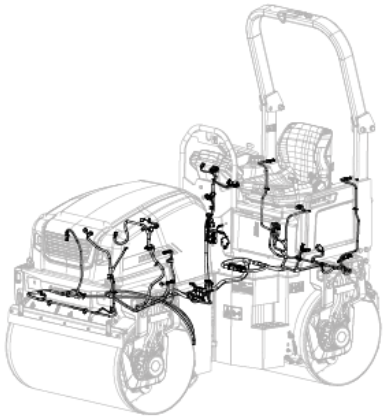

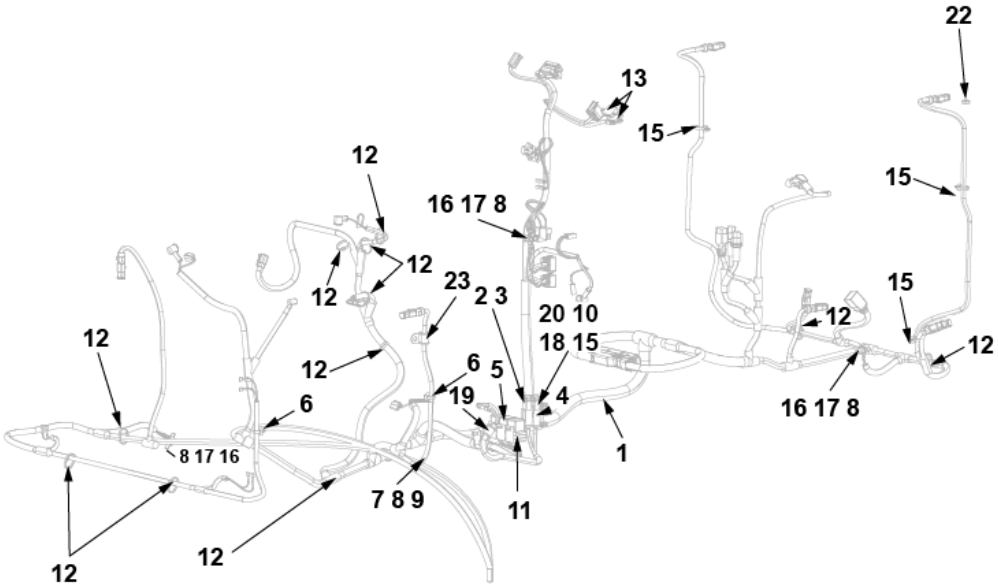

Item	Part No.	Name	Qty	L	C	SN INFO
1	4812131661	Cable harness	1			
2	4700904038	Fuse 40A Orange	1			
3	4700904039	Fuse 50A Red	1			

Item	Part No.	Name	Qty	L	C	SN INFO
4	4700904036	Bracket	1			
5	4700903956	Relay	3			
6	4700792441	Cable tie with holder	2			
7	4700960727	Clamp	1			
8	4700904229	Steel plain washer 8.4X16X1.5	7			
9	4700500019	Hexagon head screw M	1			
10	4700904281	Steel plain washer	2			
11	4700903782	Screw M5x12	3			
12	4700313041	Cable tie	N			
13	4700791723	Connector	2			
15	4812115911	Cable tie with holder	3			
16	4700570005	Hexagon nut M	6			
17	4700903768	Threaded stud	3			
18	4700570003	Hex. nut	2			
19	4700904346	Pipe clamp covered	1			
20	4812117868	Screw M05x16	2			
22	4700573005	Hexagon thin nut M	2			
23	4700921080	Clamp	1			

Electrical equipment Cable harness - Quick release disconnector

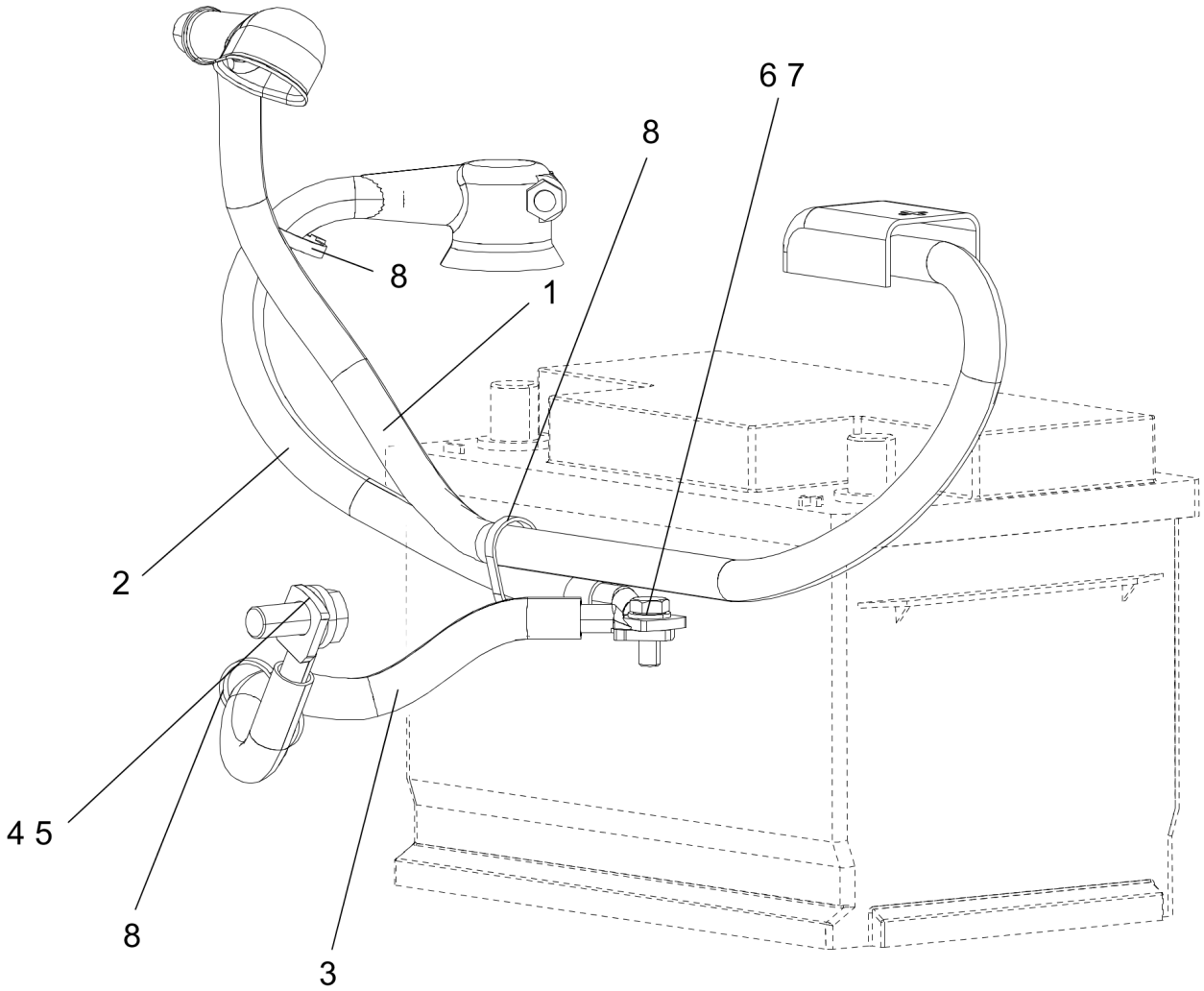

Item	Part No.	Name	Qty	L	C	SN INFO
1	4812125962	Battery cable	1			
2	4700791818	Battery cable	1			
3	4700903760	Connection cable coarse	1			

Item	Part No.	Name	Qty	L	C	SN INFO
4	4700904703	Plain washer 13x24x4 mm	1			
5	4700792250	Screw	1			
6	4700904229	Steel plain washer 8.4X16X1.5	3			
7	4700500053	Screw, M8x20 mm 8.8 A2K	1			
8	4700313041	Cable tie	3			

Electrical equipment Cable harness - Battery disconnector

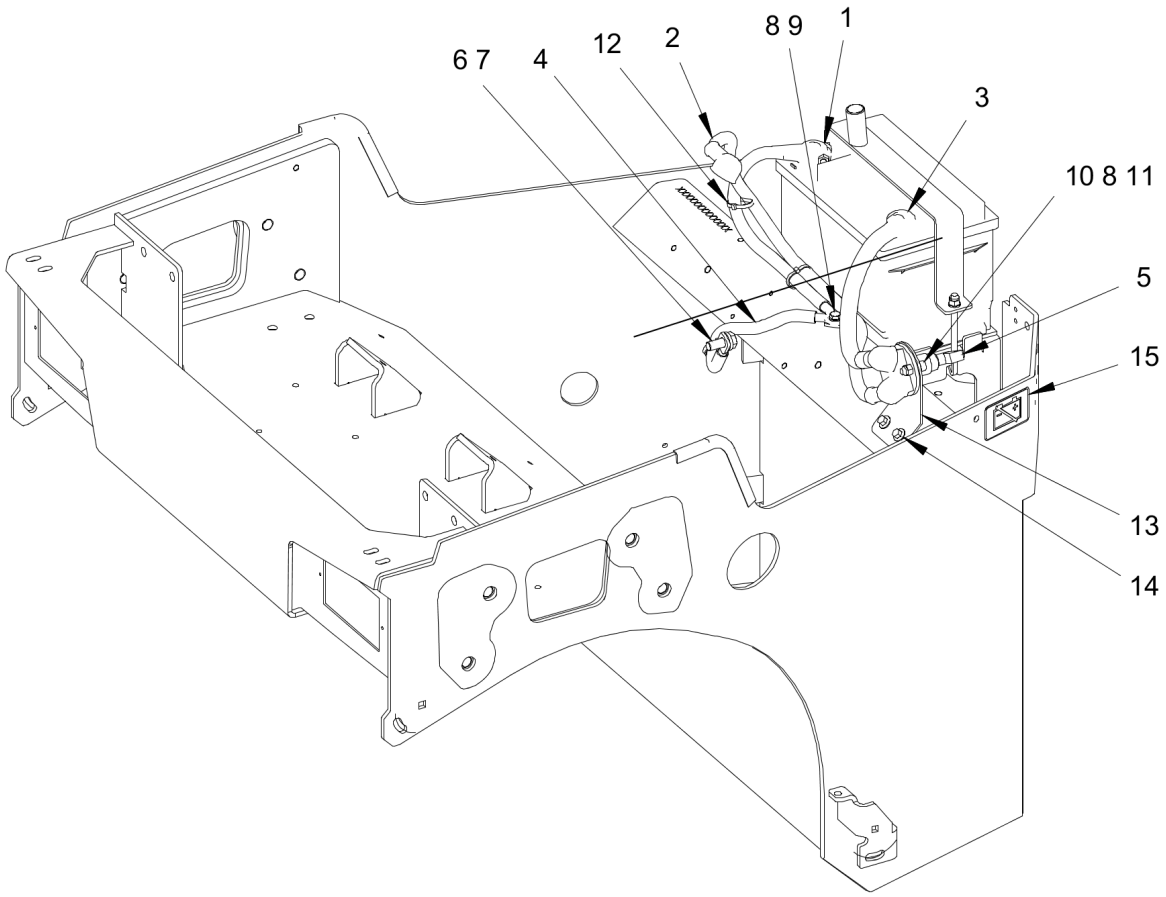

Item	Part No.	Name	Qty	L	C	SN INFO
1	4700791818	Battery cable	1			
2	4812127099	Connection cable coarse	1			
3	4812126031	Battery cable	1			

Item	Part No.	Name	Qty	L	C	SN INFO
4	4700903760	Connection cable coarse	1			
5	4700357567	Battery switch, cpl	1			
5.1	4700902560	Handle	1			
6	4700904703	Plain washer 13x24x4 mm	1			
7	4700792250	Screw	1			
8	4700904229	Steel plain washer 8.4X16X1.5	3			
9	4700500053	Screw, M8x20 mm 8.8 A2K	1			
10	4700508019	Cylinder screw	2			
11	4700586003	Lock nut M8	2			
12	4700313041	Cable tie	3			
13	4812126940	Bracket	1			
14	4700901832	Hexagon screw with flange M	2			
15	4700904835	Decal Battery power-disconnect	1			

Electrical equipment Cable harness - Working lights incl. Rotating beacon

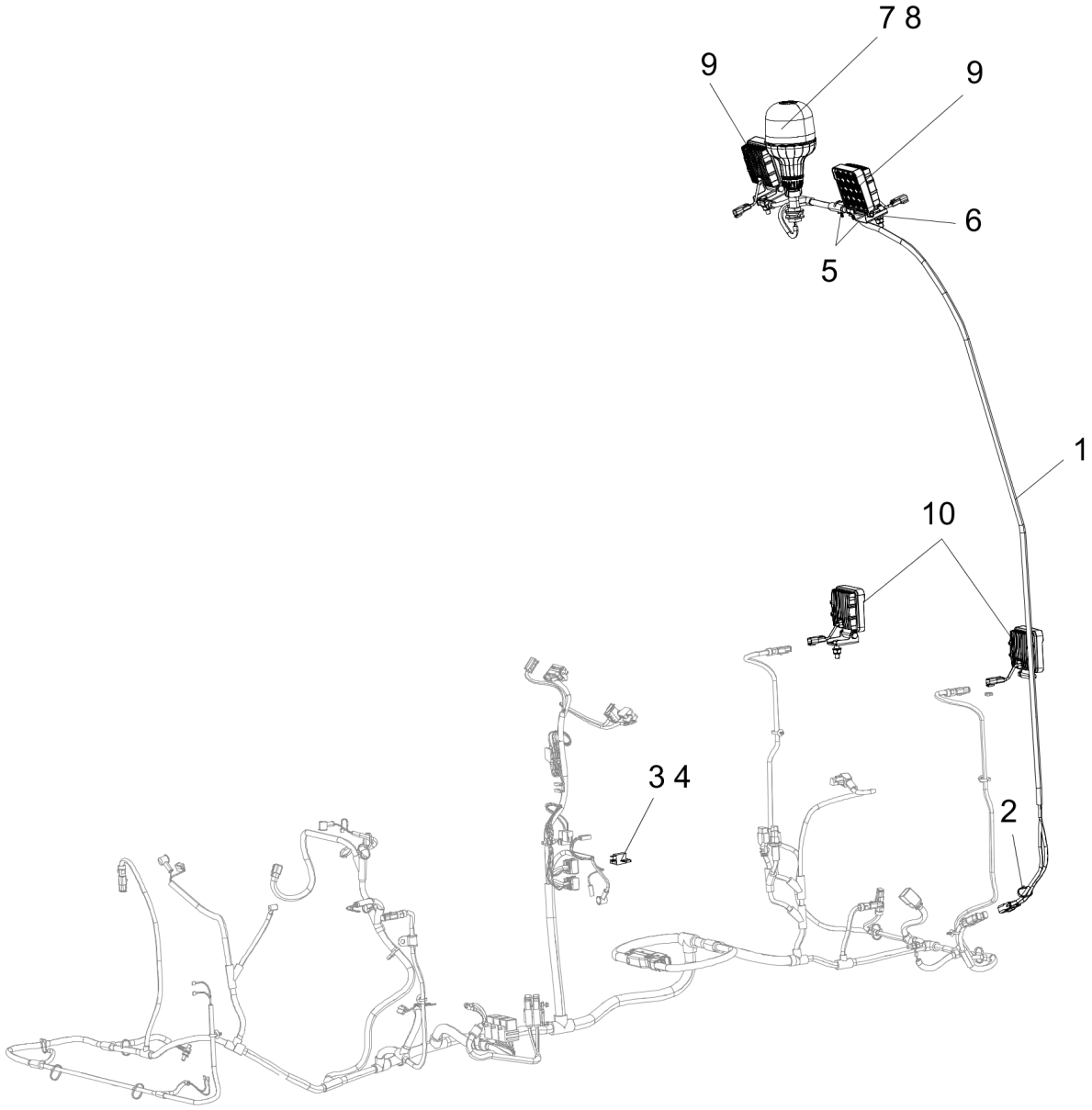

Item	Part No.	Name	Qty	L	C	SN INFO
1	4812125777	Cable harness	1			
2	4700313041	Cable tie	1			
3	4700901227	Fuse 10A Red	1			

Item	Part No.	Name	Qty	L	C	SN INFO
4	4700381390	Relay	1			
5	4812115911	Cable tie with holder	2			
6	4700500149	Screw	2			
7	4812122610	Rotating beacon, orange	1			
8	--	Bulb, H21 W BaY9s	1			
9	4812126778	Working light, LED 25W	2			
10	4812126777	Working light, LED 15W	2			

Cable harness - Driving lights up to xA026340 Cable harness - Driving lights

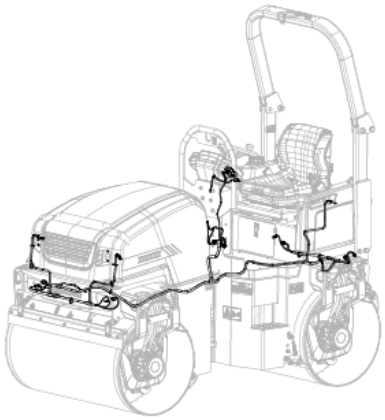

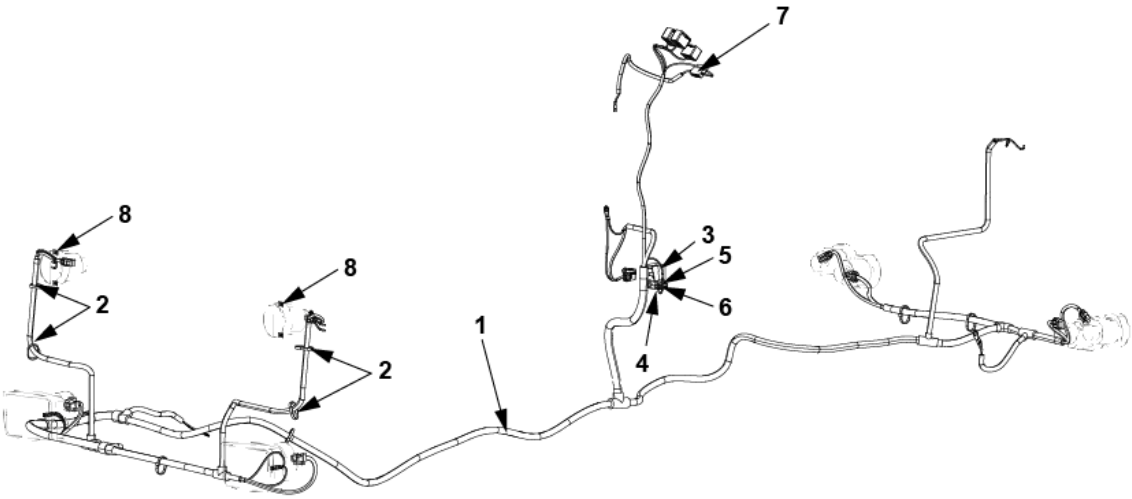

Item	Part No.	Name	Qty	L	C	SN INFO
1	4812125678	Cable harness	1			
2	4700313041	Cable tie	N			
3	4700904989	Flash relay	1			

Item	Part No.	Name	Qty	L	C	SN INFO
4	4700381390	Relay	1			
5	4700901227	Fuse 10A Red	1			
6	4700901228	Fuse 15A Blue	1			
7	4700791723	Connector	1			
8	4700791971	Quick lock nut	4			

Cable harness - Driving lights From xA026341 Cable harness - Driving lights

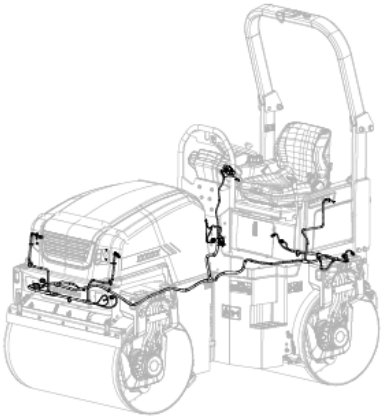

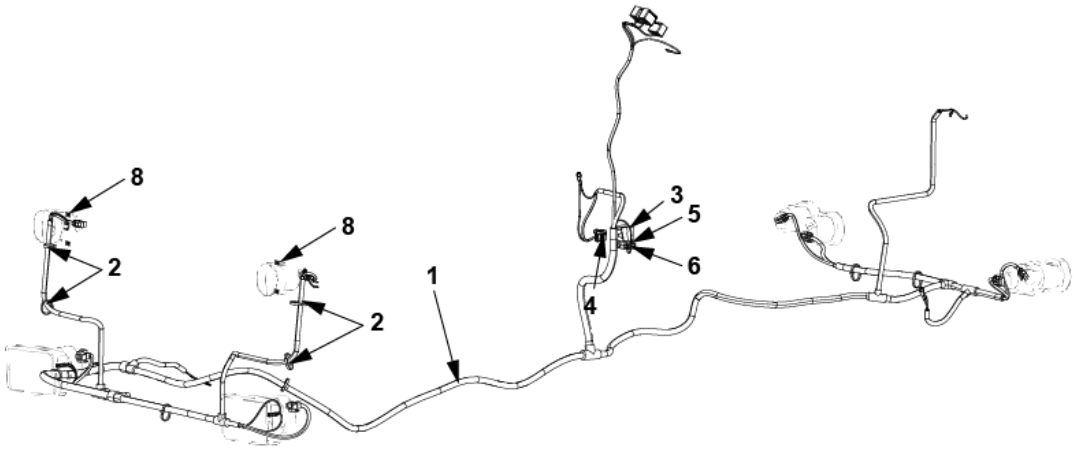

Item	Part No.	Name	Qty	L	C	SN INFO
1	4812131663	Cable harness	1			
2	4700313041	Cable tie	N			
3	4700904989	Flash relay	1			

Item	Part No.	Name	Qty	L	C	SN INFO
4	4700381390	Relay	1			
5	4700901227	Fuse 10A Red	1			
6	4700901228	Fuse 15A Blue	1			
8	4700791971	Quick lock nut	4			

Electrical equipment Cable harness - Flow divider

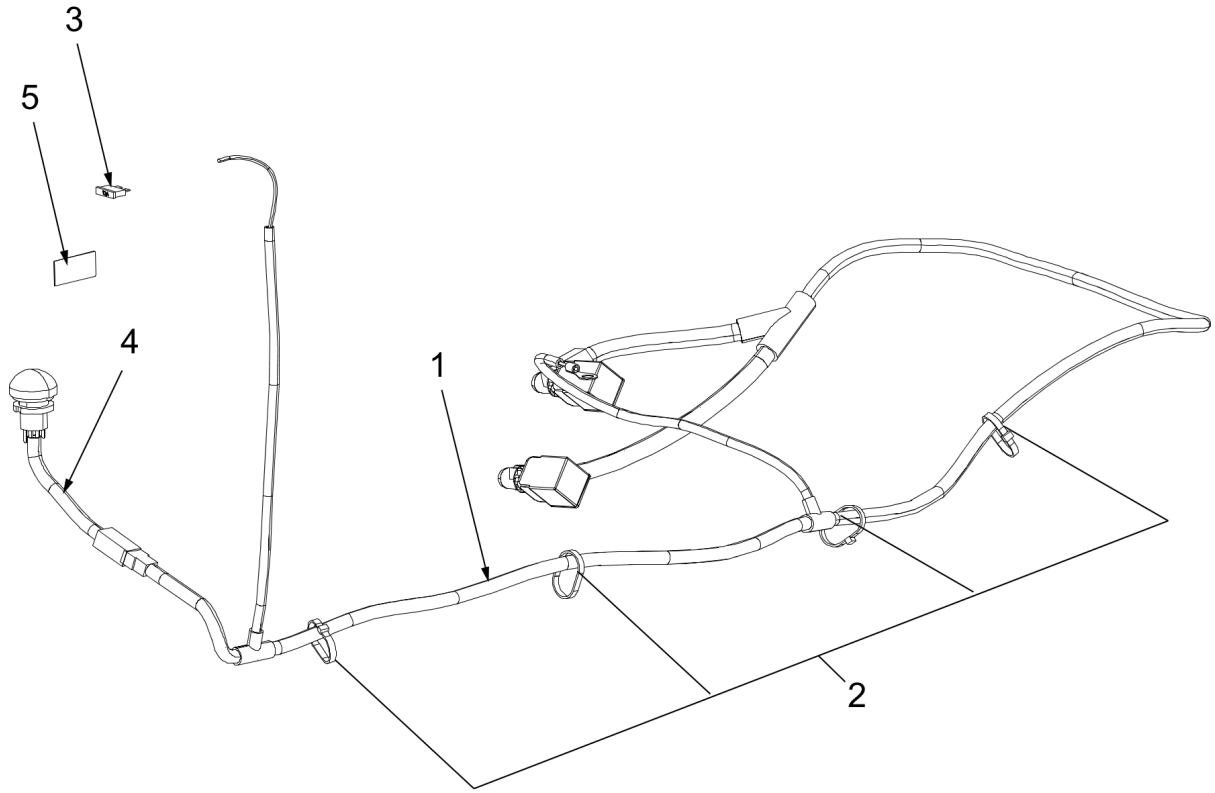

Item	Part No.	Name	Qty	L	C	SN INFO
1	4812125881	Cable harness	1			
2	4700313041	Cable tie	4			
3	4700901227	Fuse 10A Red	1			

Item	Part No.	Name	Qty	L	C	SN INFO
4	4812127015	Cable harness	1			
5	4700355981	Decal	1			

Electrical equipment Cable harness - Edge cutter, Chip spreader

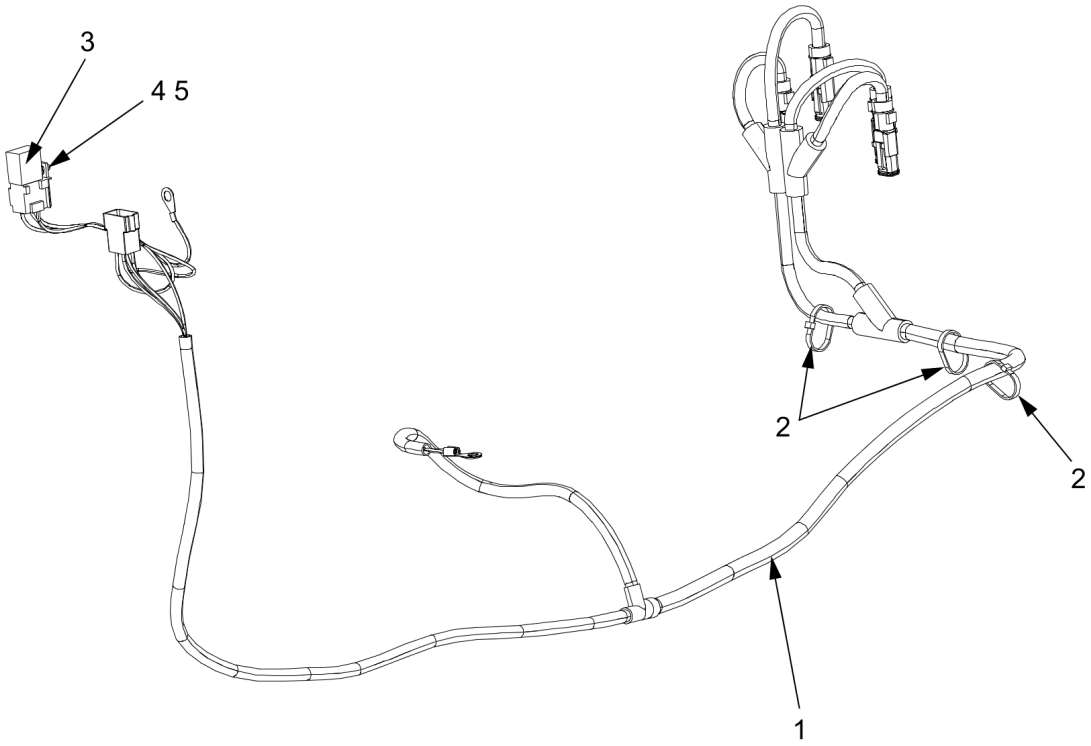

Item	Part No.	Name	Qty	L	C	SN INFO
1	4812125880	Cable harness	1			
2	4700313041	Cable tie	3			
3	4700381390	Relay	1			

Item	Part No.	Name	Qty	L	C	SN INFO
4	4700904281	Steel plain washer	1			
5	4700500003	Hex. screw	1			

Electrical equipment Cable harness - Seat heater

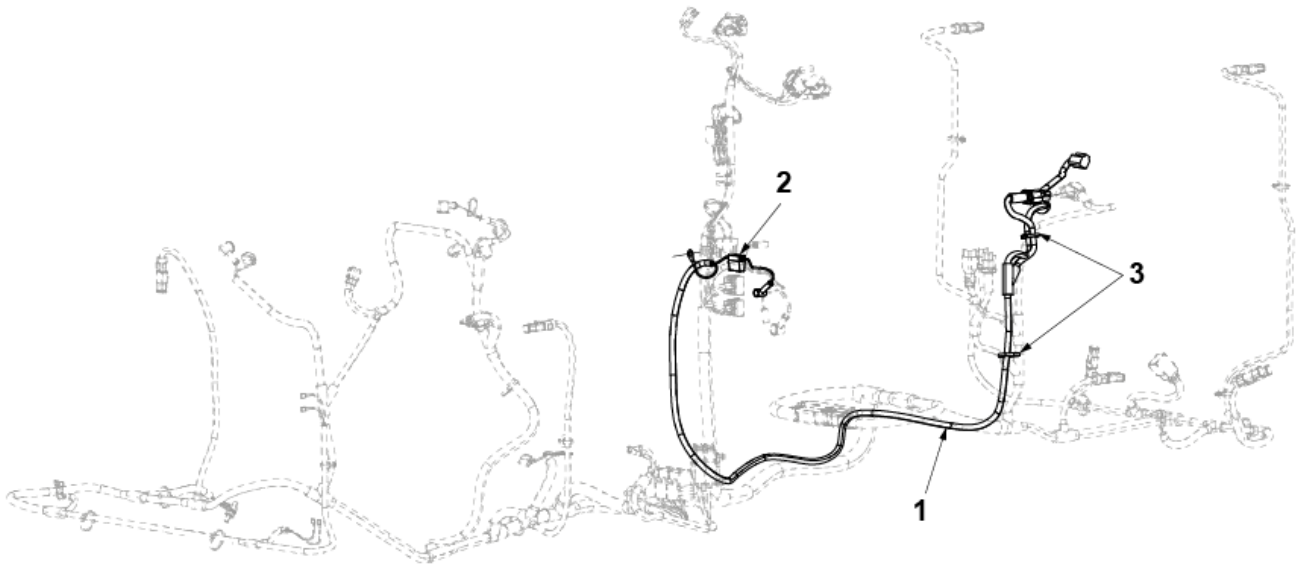

Item	Part No.	Name	Qty	L	C	SN INFO
1	4812127324	Cable harness	1			
2	4700901225	Fuse 5A Tan	1			
3	4700313041	Cable tie	2			

Electrical equipment Cable harness - Dual vibration

Item	Part No.	Name	Qty	L	C	SN INFO
1	4812125883	Cable harness	1			
2	4700313041	Cable tie	5			

Electrical equipment Cable harness - Rotating beacon

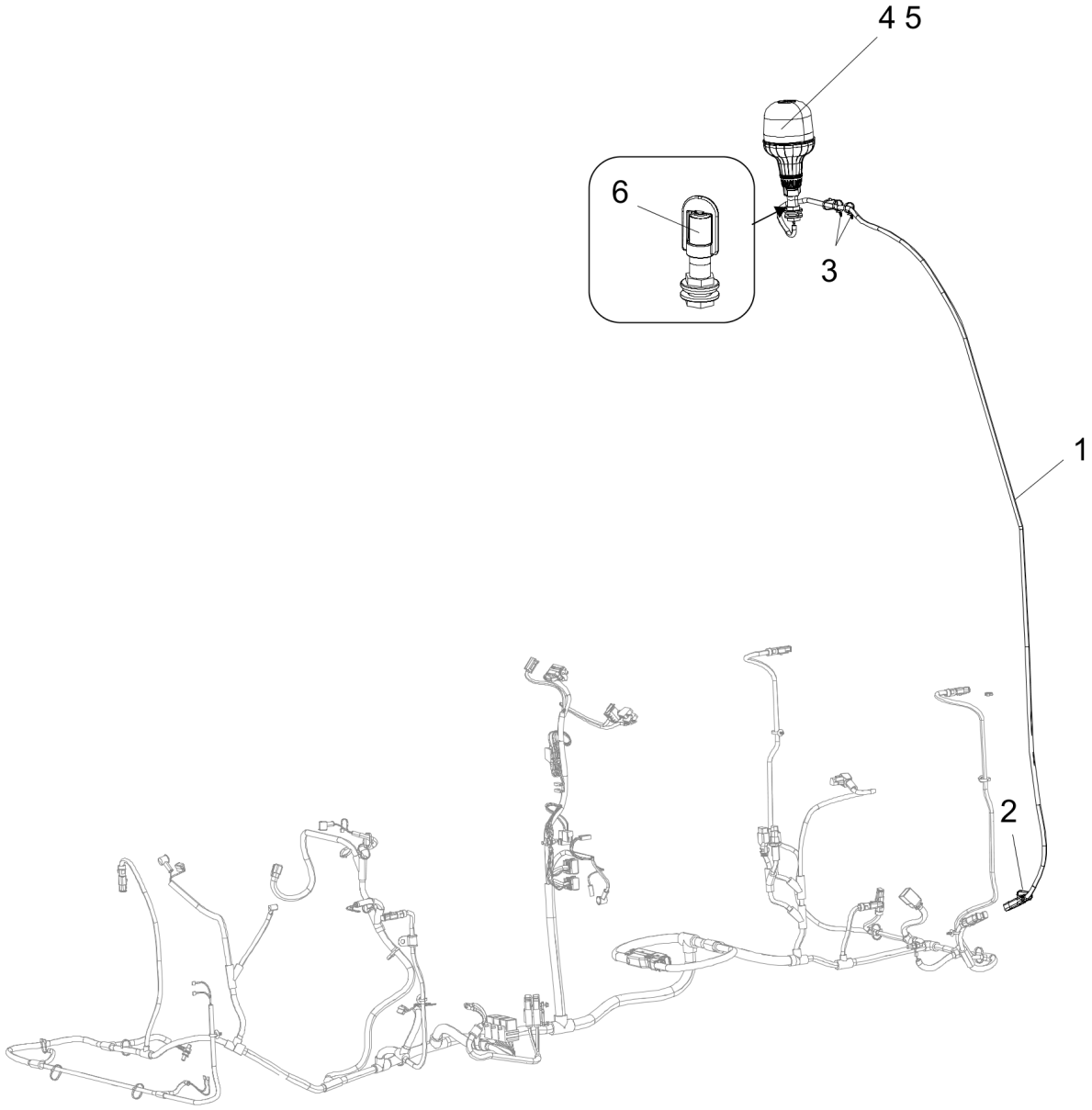

Item	Part No.	Name	Qty	L	C	SN INFO
1	4812125861	Cable harness	1			
2	4700313041	Cable tie	1			
3	4812115911	Cable tie with holder	2			

Item	Part No.	Name	Qty	L	C	SN INFO
4	4812122610	Rotating beacon, orange	1			
5	--	Bulb, H21 W BaY9s	1			
6	4812120469	Bracket	1			

Electrical equipment Cable harness - Working lights, Canopy Mounted

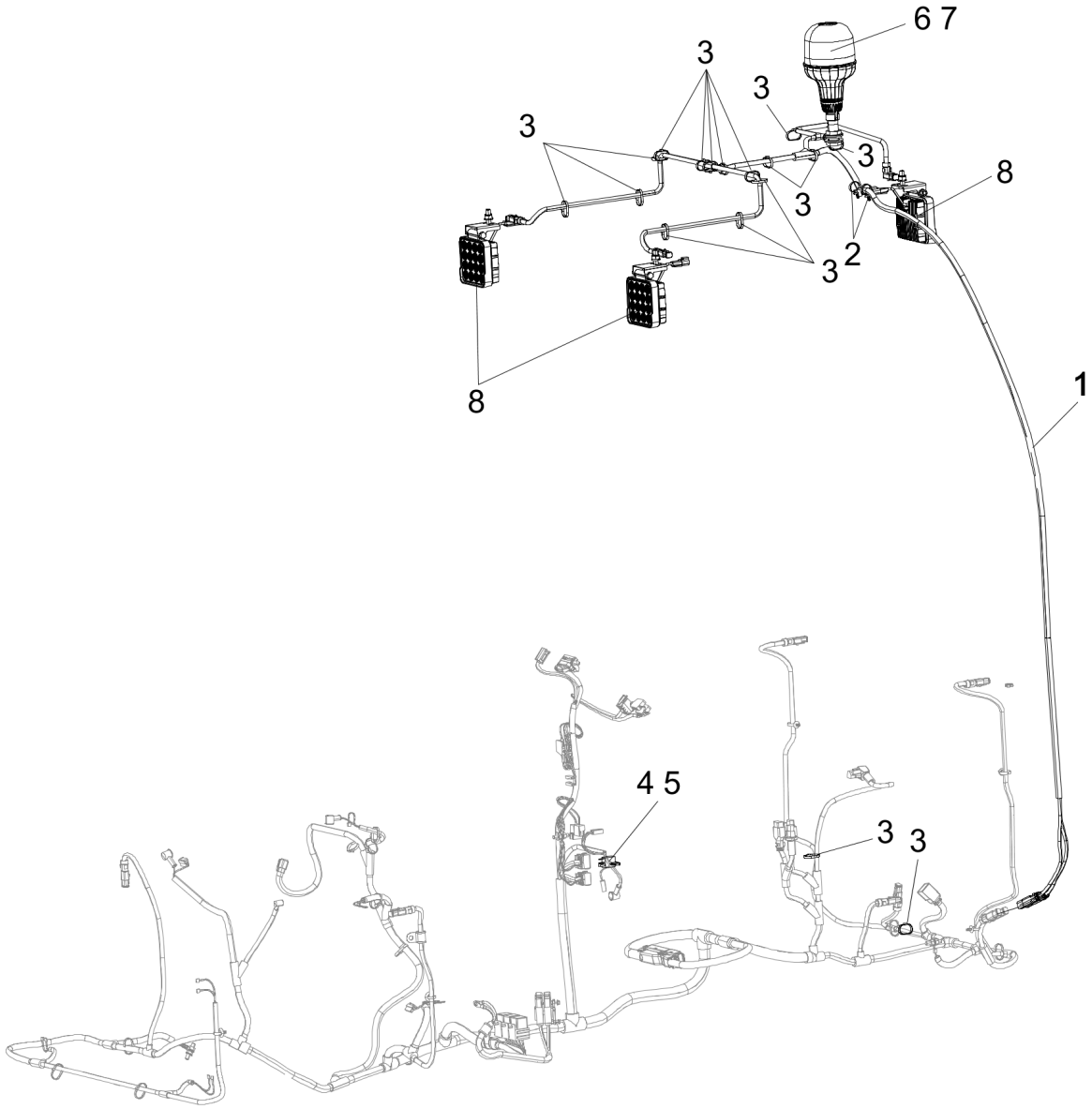

Item	Part No.	Name	Qty	L	C	SN INFO
1	4812125949	Cable harness	1			
2	4812115911	Cable tie with holder	2			
3	4700313041	Cable tie	17			

Item	Part No.	Name	Qty	L	C	SN INFO
4	4700901225	Fuse 5A Tan	1			
5	4700381390	Relay	1			
6	4812122610	Rotating beacon, orange	1			
7	--	Sensor kit	1			
8	-	Pulley, alternator	3			

Electrical equipment Cable harness kit - double pole (option)

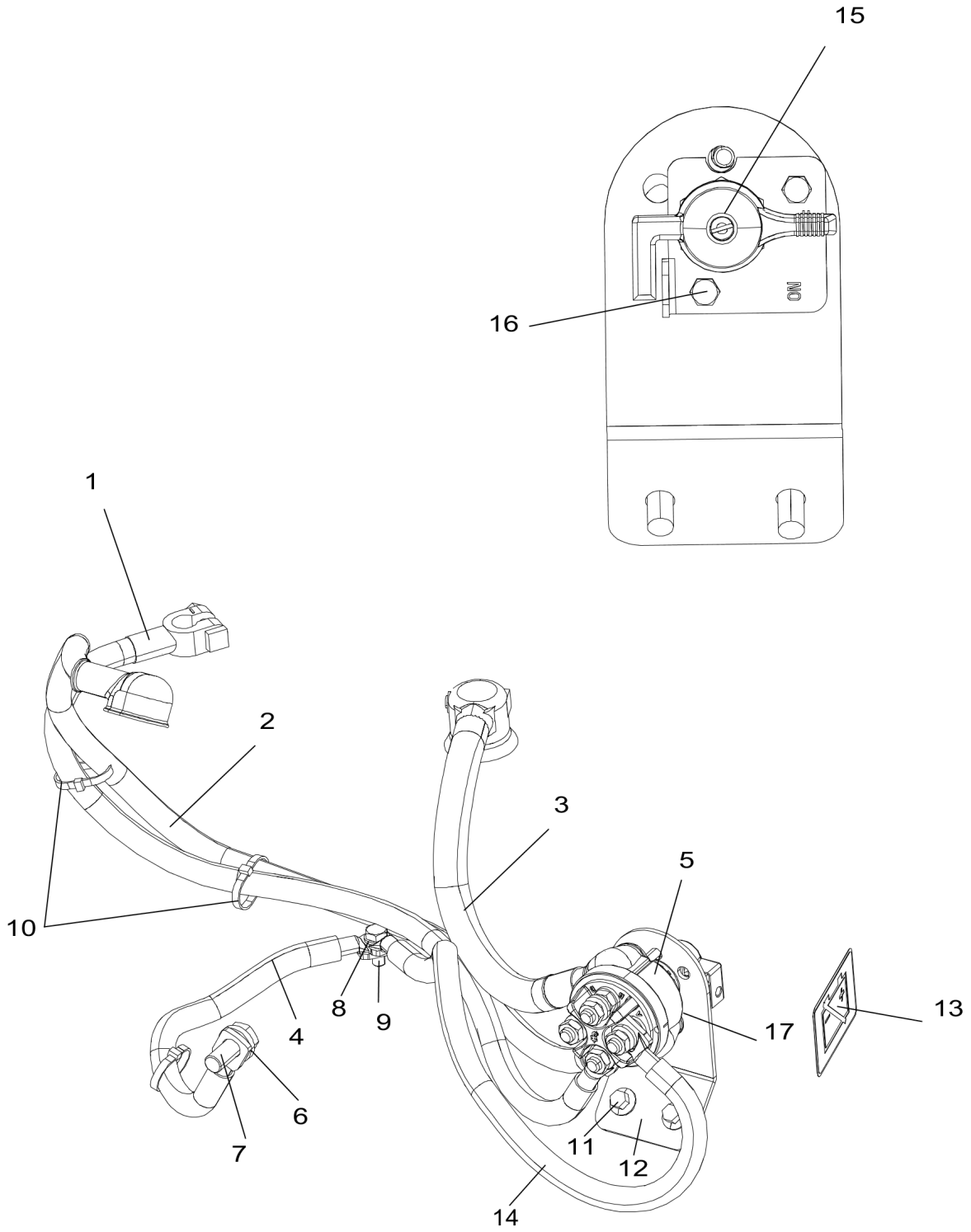

Item	Part No.	Name	Qty	L	C	SN INFO
1	4812129045	Battery cable	1			
2	4812127099	Connection cable coarse	1			
3	4812126031	Battery cable	1			

Item	Part No.	Name	Qty	L	C	SN INFO
4	4700903760	Connection cable coarse	1			
5	4812315373	Battery switch	1			
6	4700904703	Plain washer 13x24x4 mm	1			
7	4700792250	Screw	1			
8	4700904229	Steel plain washer 8.4X16X1.5	1			
9	4700500053	Screw, M8x20 mm 8.8 A2K	1			
10	4700313041	Cable tie	3			
11	4700901832	Hexagon screw with flange M	2			
12	4812126940	Bracket	1			
13	4700904835	Decal Battery power-disconnect	1			
14	4812117744	Connection cable coarse	1			
15	4812315374	Battery switch handle	1			
16	4700500004	Hexagon head screw M5x12	2			
17	4700902284	Nut M5	2			

Electrical equipment Driving lights (option)

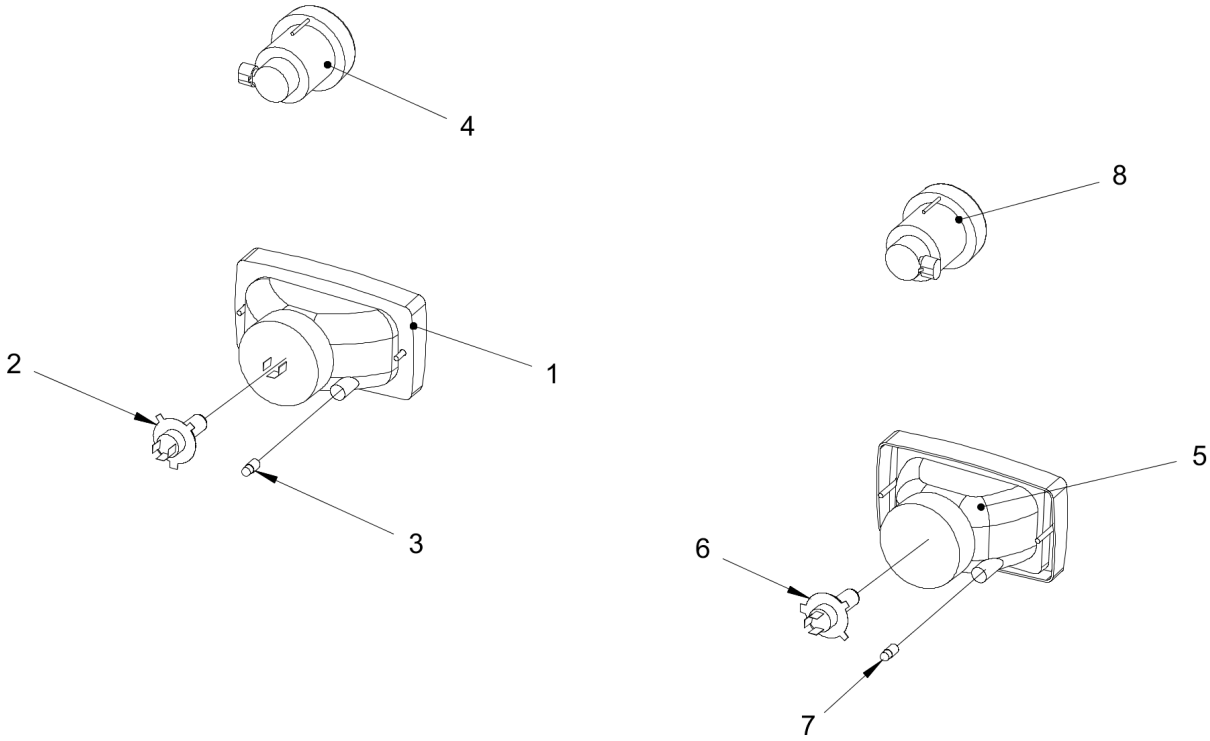

Item	Part No.	Name	Qty	L	C	SN INFO
1	4700792059	Headlight left hand asym. with parking light	2			
2	4700900790	Bulb 60/55w H4	2			
3	4700985012	Bulb	2			

Item	Part No.	Name	Qty	L	C	SN INFO
4	4700791953	Direction indicator	2			
5	4700791951	Headlight right hand asym. with parking light	2			
6	4700900790	Bulb 60/55w H4	2			
7	4700985012	Bulb	2			
8	4700791953	Direction indicator	2			

Electrical equipment Driving lights, rear

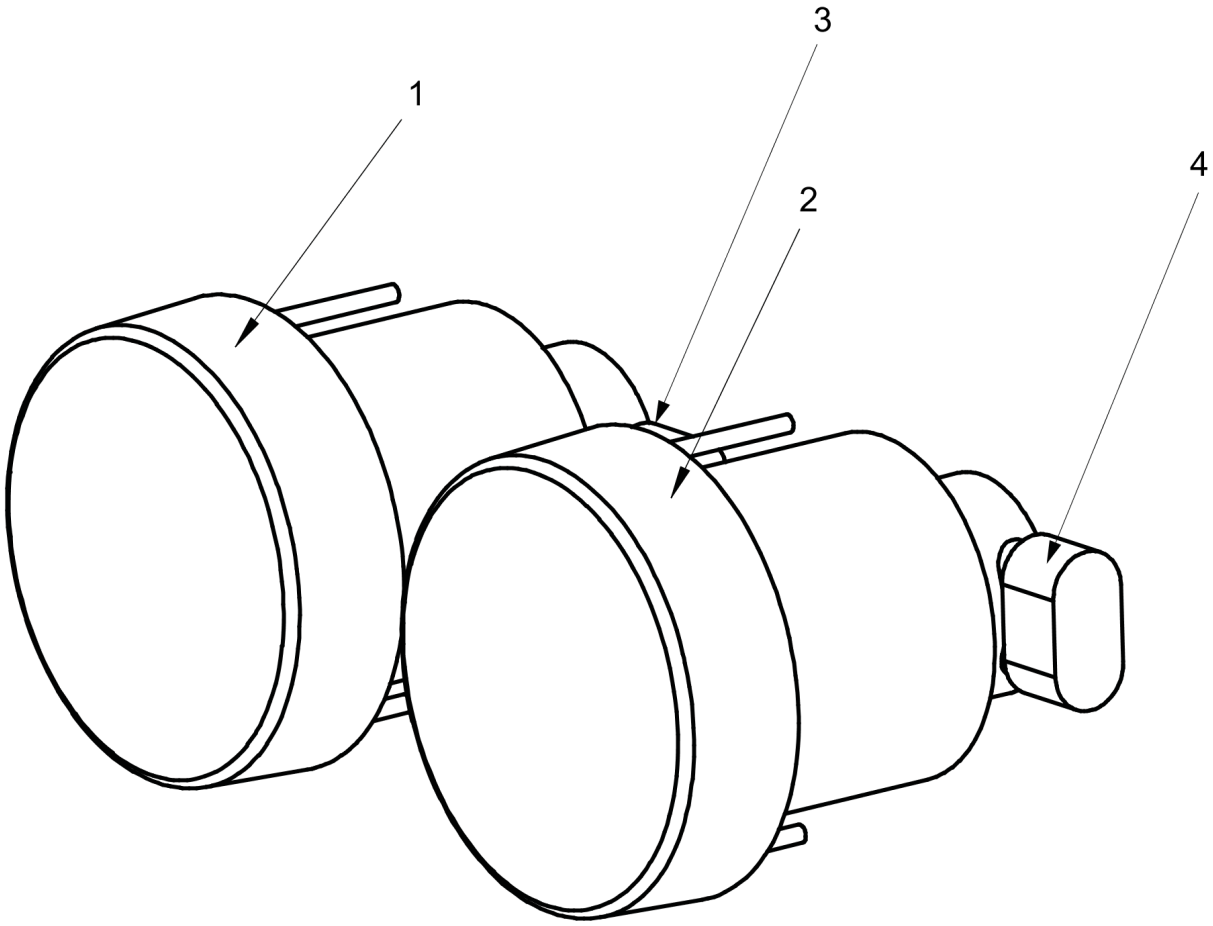

Item	Part No.	Name	Qty	L	C	SN INFO
1	4700791954	Direction indicator	1			
2	4700791955	Brake/Position light	1			

Electrical equipment Working lights (option)

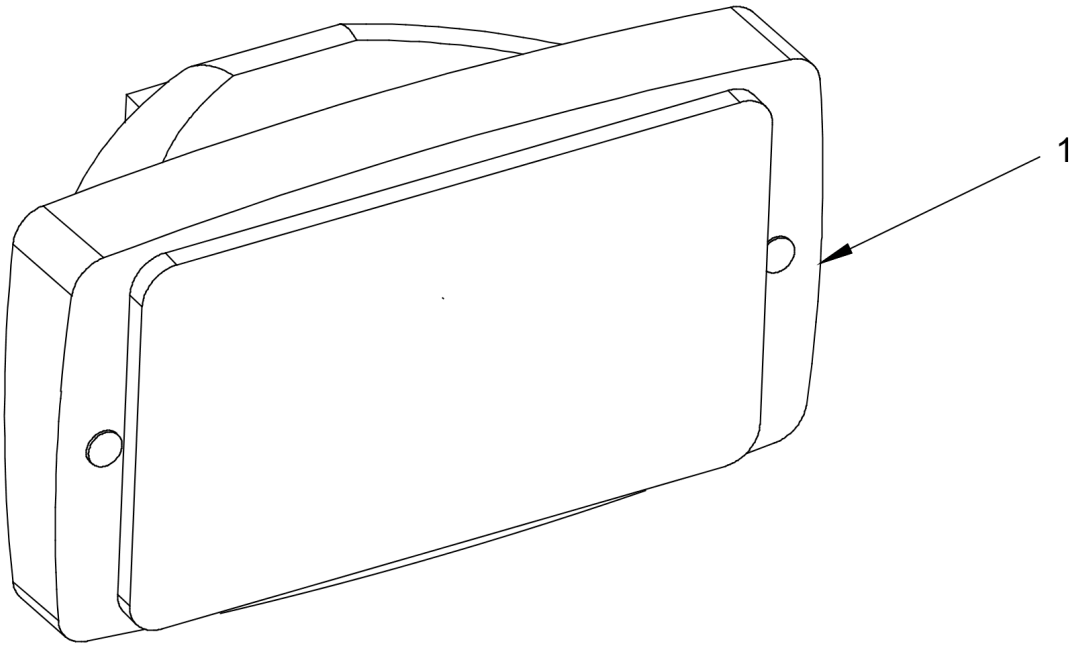

Item	Part No.	Name	Qty	L	C	SN INFO
1	4700902227	Work light	2			

Electrical equipment Working light LED module

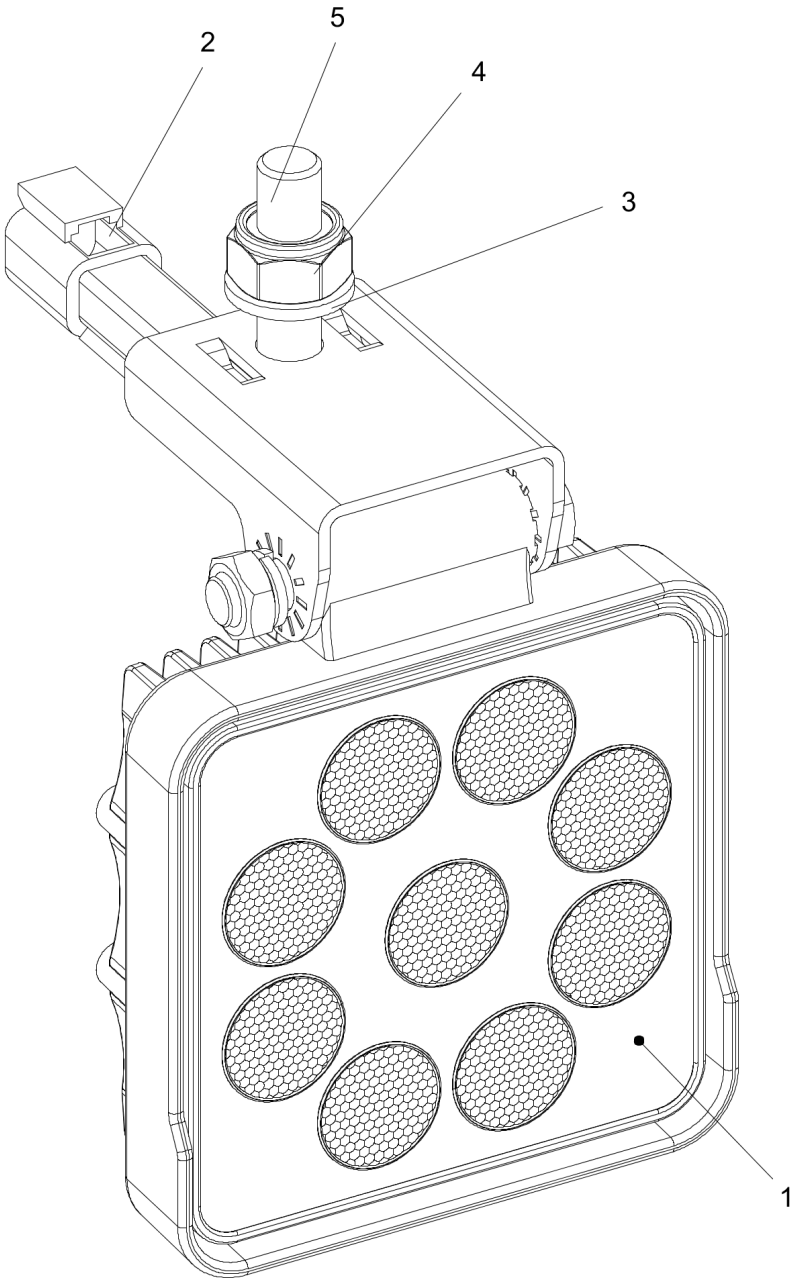

Item	Part No.	Name	Qty	L	C	SN INFO
1	4812126777	Working light, LED 15W	1			
2	4700791688	Connector	1			
3	--	Sensor kit	1			

Item	Part No.	Name	Qty	L	C	SN INFO
4	--	Sensor kit	1			
5	--	Sensor kit	1			

Electrical equipment Working light module S-LED

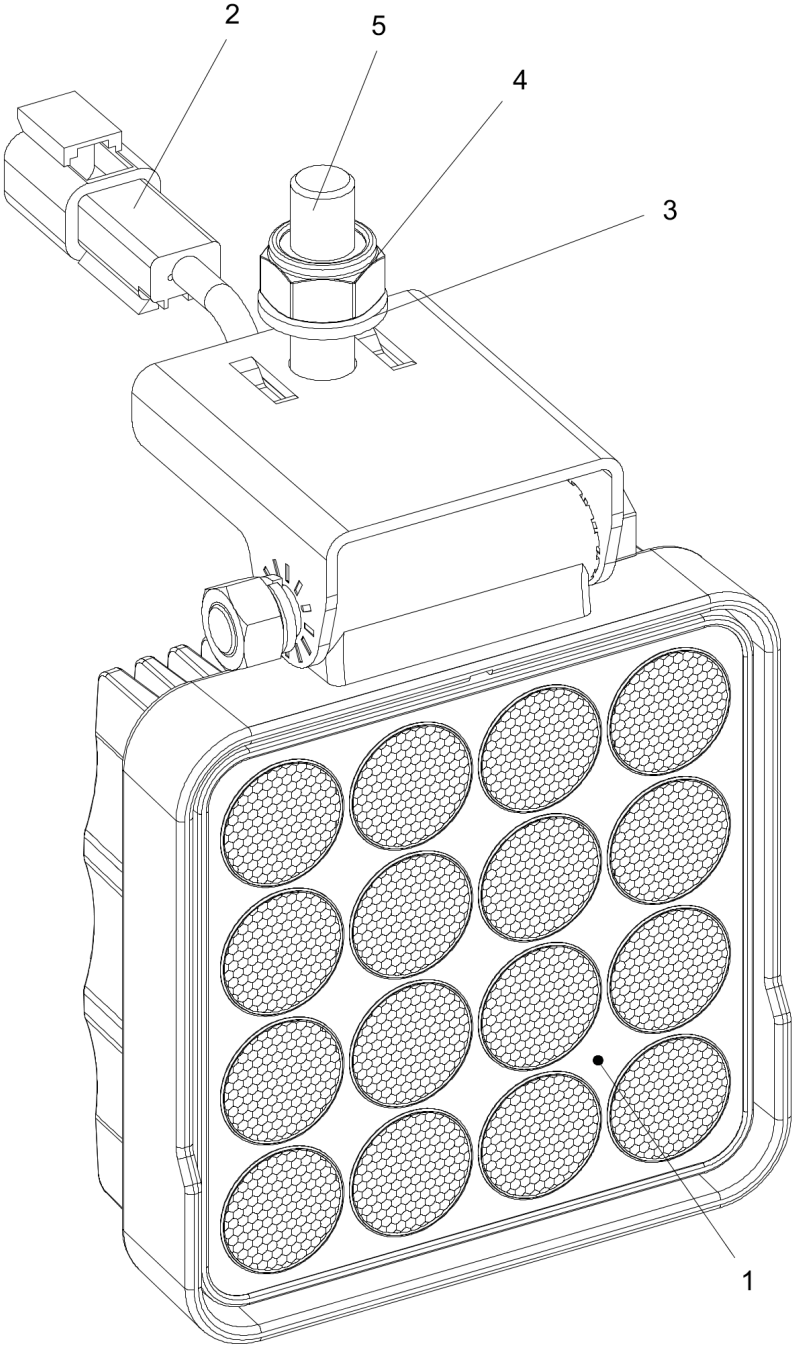

Item	Part No.	Name	Qty	L	C	SN INFO
1	4812126778	Working light, LED 25W	1			
2	4700791688	Connector	1			
3	--	Sensor kit	1			

Item	Part No.	Name	Qty	L	C	SN INFO
4	--	Sensor kit	1			
5	--	Sensor kit	1			

Electrical equipment Registration plate light

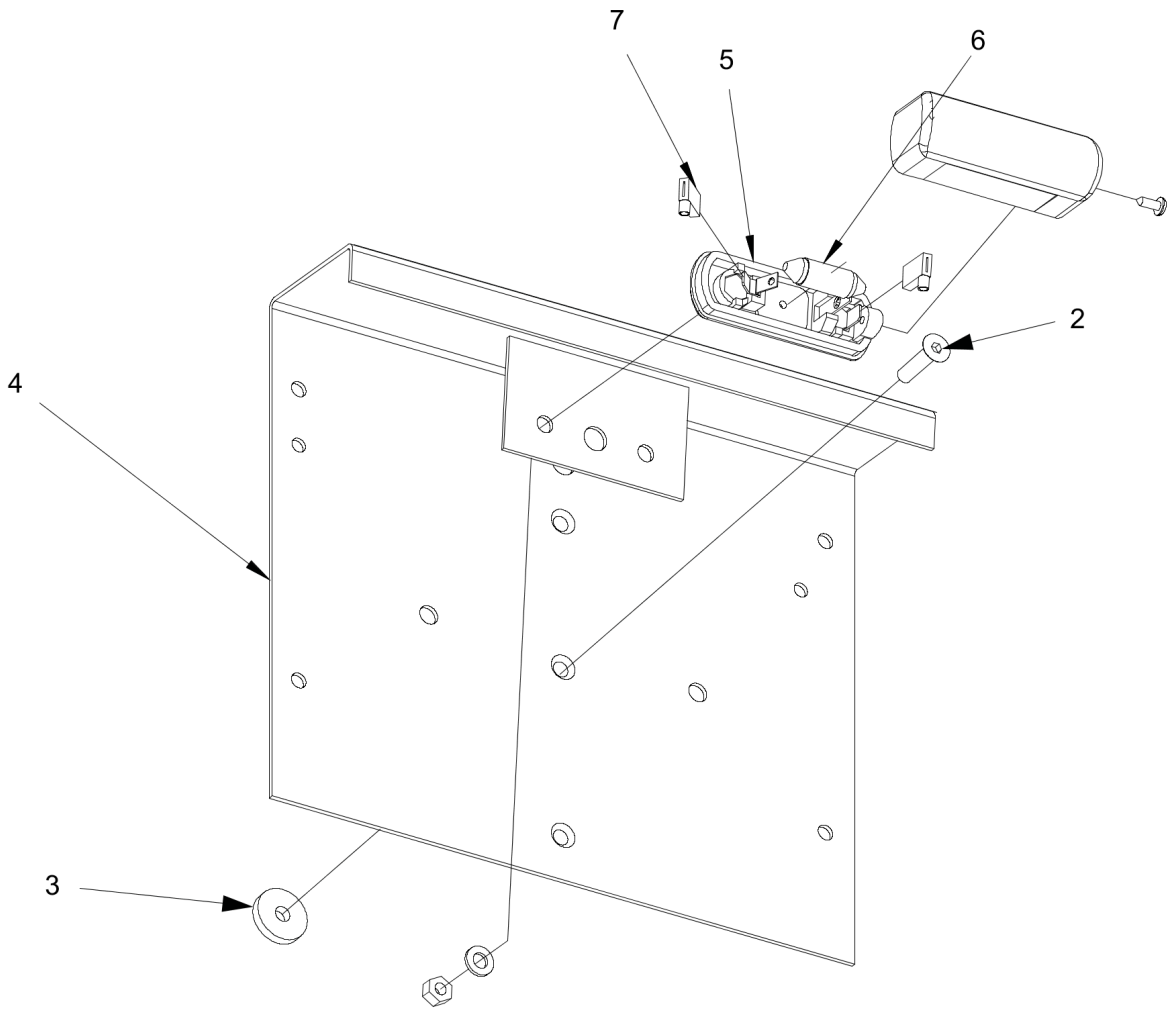

Item	Part No.	Name	Qty	L	C	SN INFO
2	4700928784	Hexagon socket countersunk screw M	2			
3	4700904735	Steel plain washer	2			
4	4700355797	Registration plate	1			

Item	Part No.	Name	Qty	L	C	SN INFO
5	4700929455	Registration-plate light	1			
6	4700985013	Bulb	1			
7	4700792035	Push-on terminal 90	2			

Referenced Pages

Battery holder 72

Drivers platform Platform

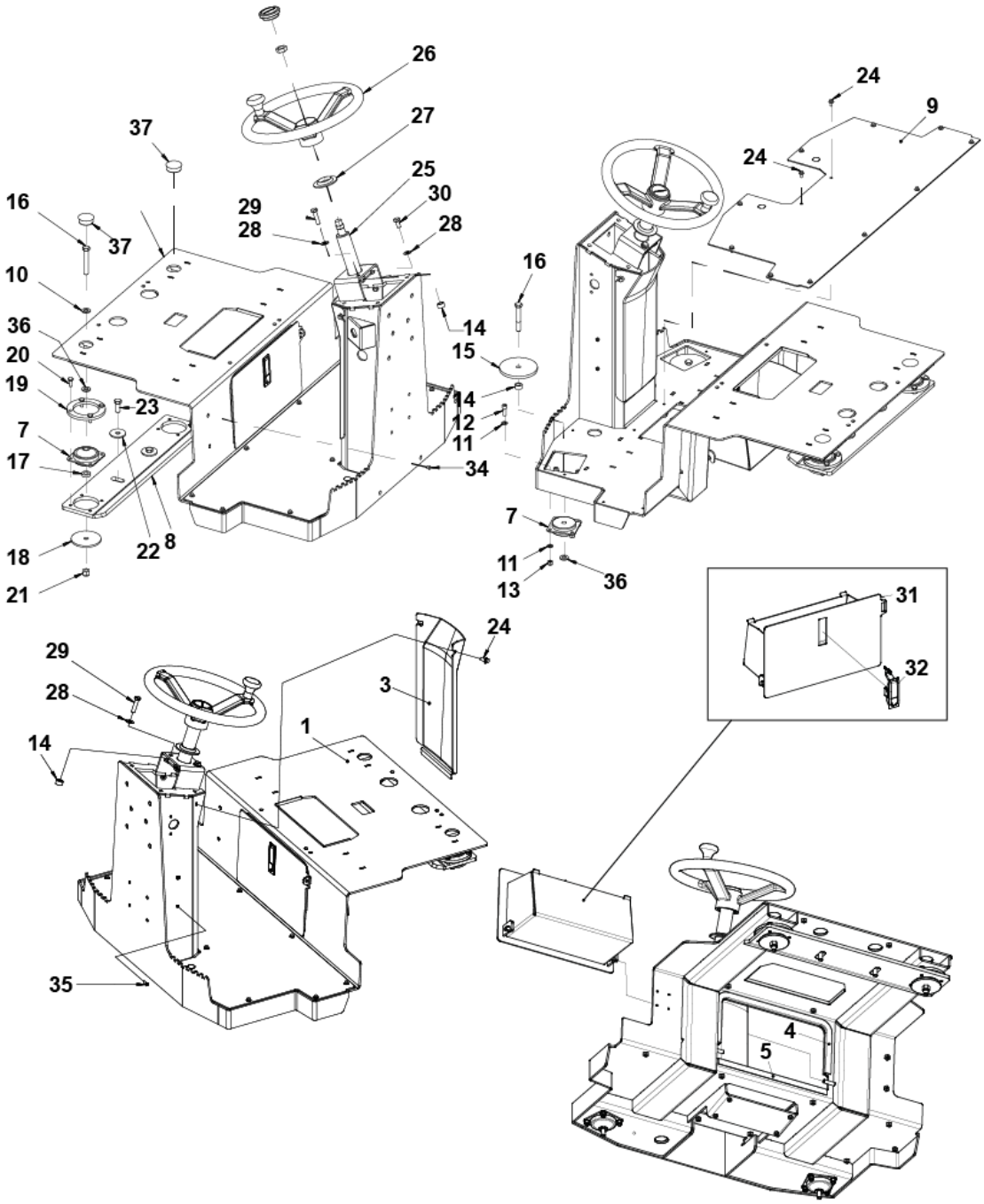

Item	Part No.	Name	Qty	L	C	SN INFO
1	4812126973	Platform	1			
3	4812125902	Front cover	1			

Item	Part No.	Name	Qty	L	C	SN INFO
4	4700902379	Edge trim	0,6 M			
5	4700902379	Edge trim	0,36 M			
7	4700902797	Shock absorber	4			
8	4812125852	Bracket	1			
9	4812124793	Floor plate	1			
10	4700904231	Steel plain washer	2			
11	4700904229	Steel plain washer 8.4X16X1.5	16			
12	4700508019	Cylinder screw	8			
13	4700586003	Lock nut M8	8			
14	4700355869	Spacer sleeve	4			
15	4812125887	Washer	2			
16	4700500196	Screw M12-1,75x80 8.8	4			
17	4700902892	Washer	2			
18	4700358232	Washer	2			
19	4812125886	Backup ring	2			
20	4700500053	Screw, M8x20 mm 8.8 A2K	8			
21	4700586019	Lock nut M12	2			
22	4700791165	Washer, 13 x 45 x 4 mm, 0.51 x 1.77 x 0.16 A2K	2			
23	4700500046	Hex. head screw M12x030H	2			
24	4700902989	Hexagon screw with flange M6x12	12			
25	4700902123	Steering column	1			
26	4700372964	Steering wheel	1			
27	4700928830	Rubber part	1			
28	4700904230	Plain washer M10 10.5X22X2.0	4			
29	4700500240	Hex head screw	2			
30	4700500048	Hex. Head screw	2			
31	4812125851	Box	1			
32	4812125915	Lock	1			
33	4700901832	Hexagon screw with flange M	2			
34	4700926215	Protective plug	2			
35	4700904206	Hex.sock.button h.cap screw M	2			
36	4700904703	Plain washer 13x24x4 mm	4			
37	4812131145	Plug	2			

Drivers platform Single lifting point

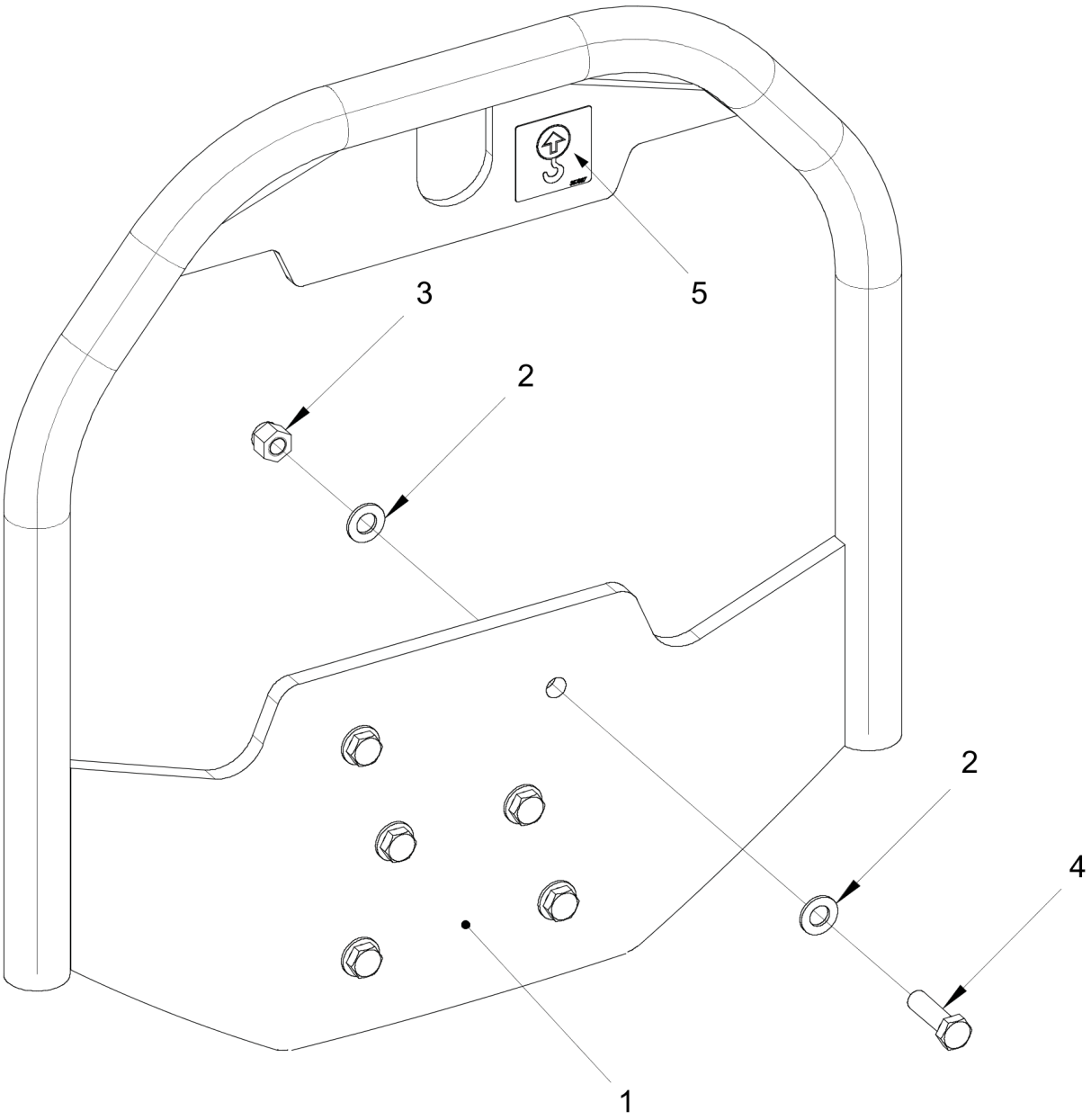

Item	Part No.	Name	Qty	L	C	SN INFO
1	4812125521	Hand rail	1			
2	4700904231	Steel plain washer	12			
3	4812110968	Lock nut	6			

Item	Part No.	Name	Qty	L	C	SN INFO
4	4700947689	Hexagon Head Screw, M12x40H, 10.9, Geomet	6			
5	4700357587	Label lifting point	1			

Drivers platform Hand rail

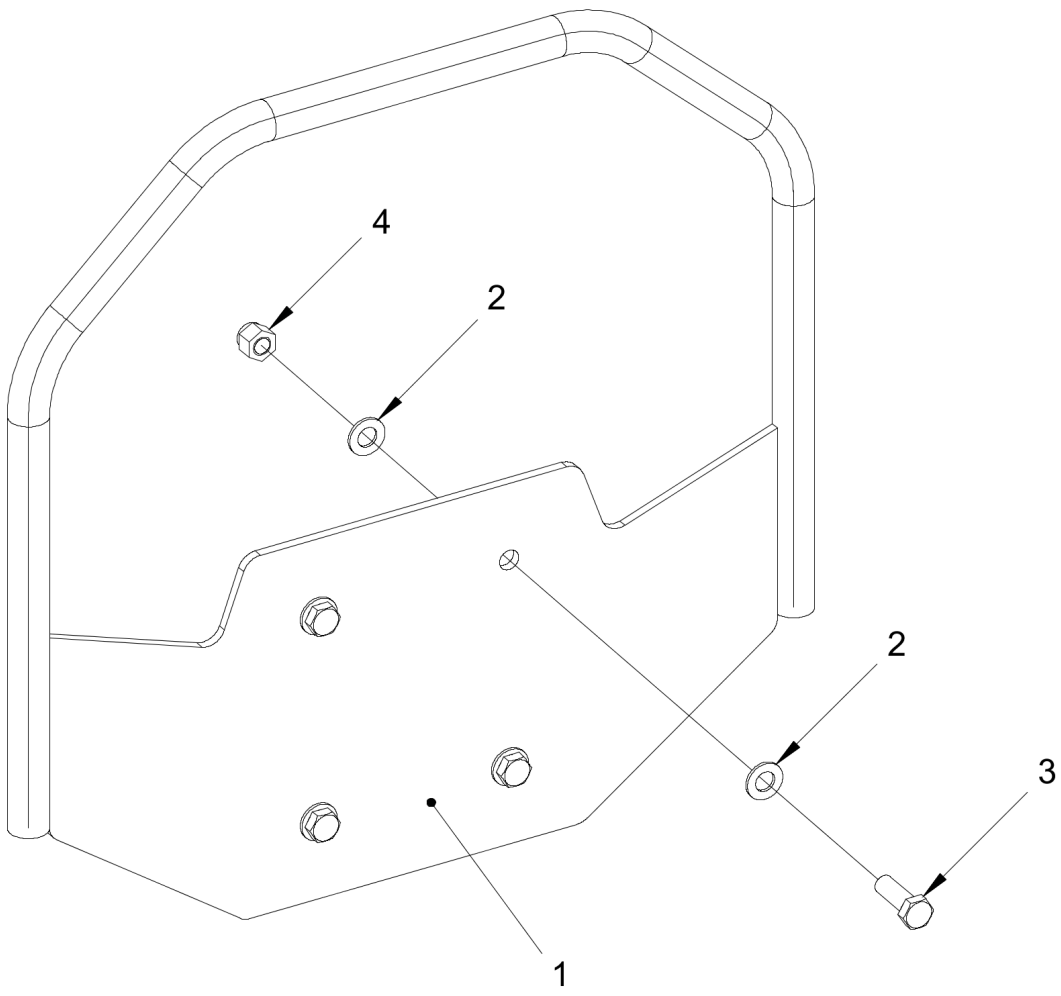

Item	Part No.	Name	Qty	L	C	SN INFO
1	4812125631	Hand rail	1			
2	4700904231	Steel plain washer	8			
3	4700947689	Hexagon Head Screw, M12x40H, 10.9, Geomet	4			

Item	Part No.	Name	Qty	L	C	SN INFO
4	4812110968	Lock nut	4			

Control panel Up to: xA026864 Control panel

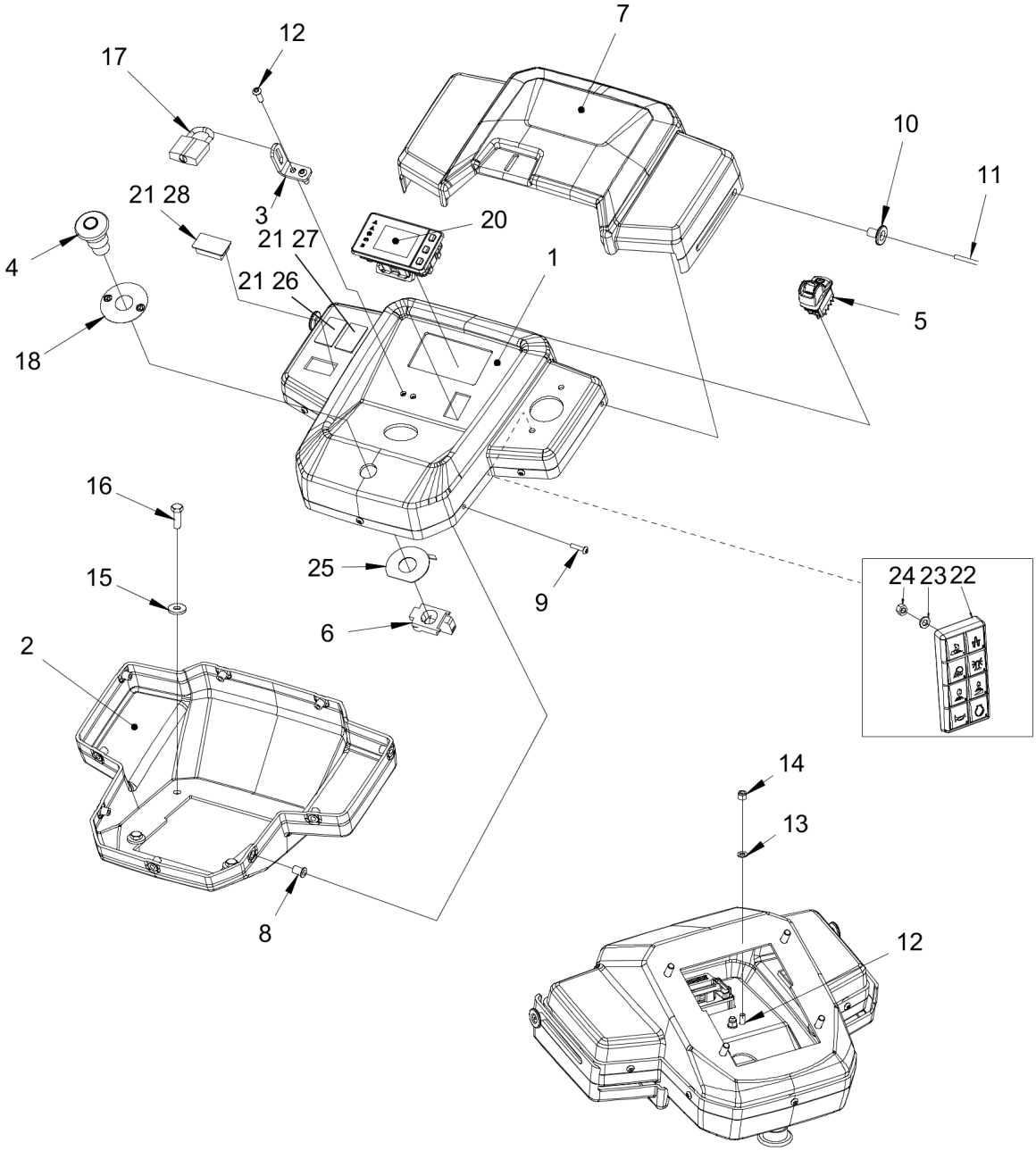

Item	Part No.	Name	Qty	L	C	SN INFO
1	4812125959	Cover	1			
2	4812125960	Cover	1			
3	4812126008	Bracket	1			

Item	Part No.	Name	Qty	L	C	SN INFO
4	4700791739	Emergency stop	1			
5	4812118697	Switch, Parking brake	1			
6	4700389840	Connector	1			
7	4812126007	Cover	1			
8	4700792536	Rubber nut	9			
9	4700792589	Hex.sock.button h.cap screw M	7			
10	4700357855	Bolt	2			
11	4700792742	Hexagon socket countersunk screw M	2			
12	4700791524	Hex.sock.button h.cap screw M	2			
13	4700904228	Steel plain washer	2			
14	4700586002	Lock nut M	2			
15	4700904640	Steel plain washer	4			
16	4700500021	Hexagon head screw M	4			
17	4700358881	Padlock	1			
18	4811000128	Plate	1			
20	4812132009	Display Unit	1			
21	4700791588	Panel plug	3			
22	4812126908	Keypad	1			
23	4700904228	Steel plain washer	2			
24	4700570004	Hexagon nut M	2			
25	4812128078	TAB WASHER	1			
26	4700791583	Switch, Driving lights	1	A		
27	4700791584	Switch, Hazard	1	A		
28	4700792413	Switch, Direction indicator	1	A		

Comments for Page: Control panel

(L)OCAL REMARKS

A | Optional

Control panel From: xA026865 Control panel

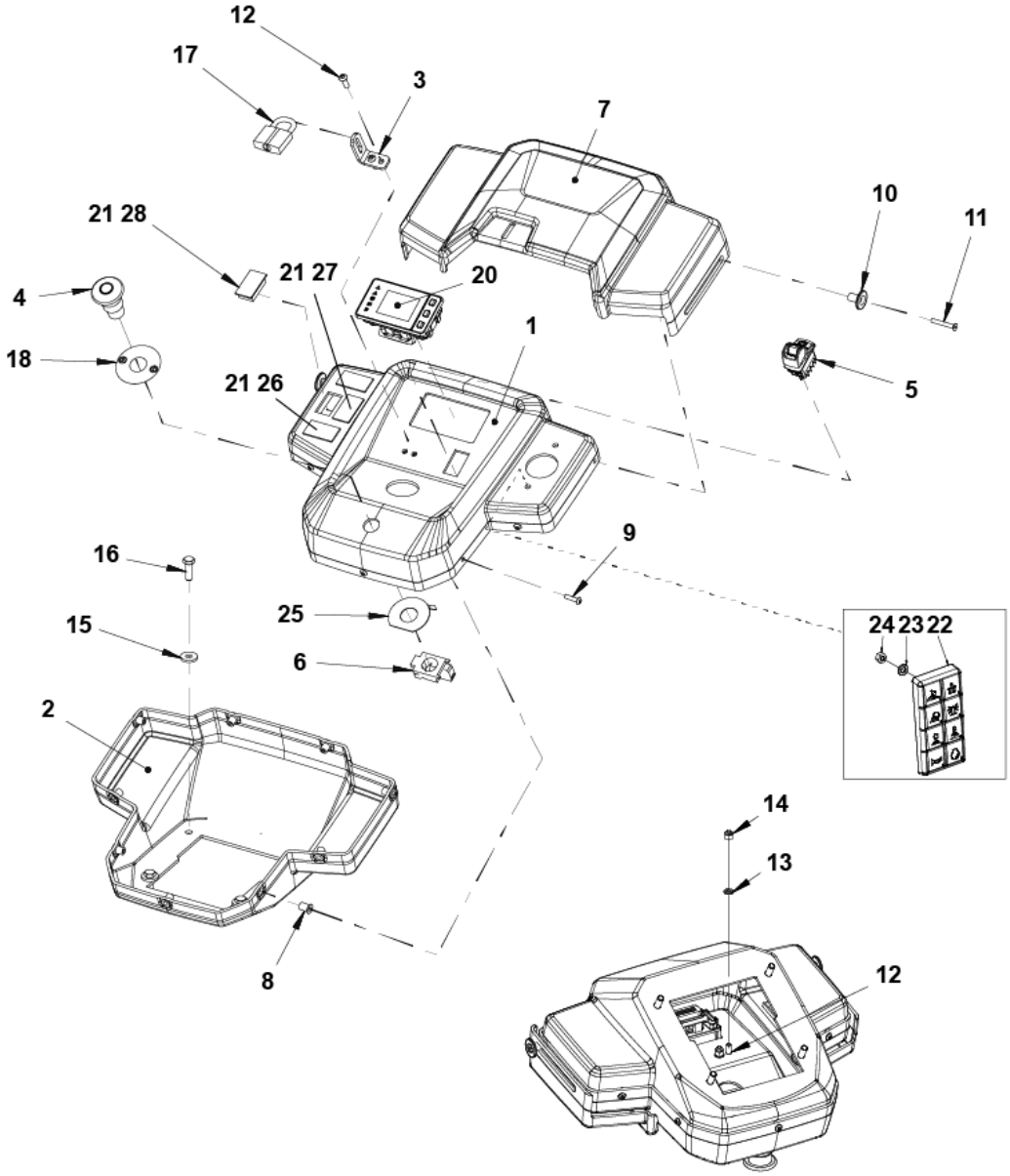

Item	Part No.	Name	Qty	L	C	SN INFO
1	4812125959	Cover	1			
2	4812125960	Cover	1			
3	4812126008	Bracket	1			

Item	Part No.	Name	Qty	L	C	SN INFO
4	4700791739	Emergency stop	1			
5	4812118697	Switch, Parking brake	1			
6	4700389840	Connector	1			
7	4812126007	Cover	1			
8	4700792536	Rubber nut	9			
9	4700792589	Hex.sock.button h.cap screw M	7			
10	4700357855	Bolt	2			
11	4700792742	Hexagon socket countersunk screw M	2			
12	4700791524	Hex.sock.button h.cap screw M	2			
13	4700904228	Steel plain washer	2			
14	4700586002	Lock nut M	2			
15	4700904640	Steel plain washer	4			
16	4700500021	Hexagon head screw M	4			
17	4700358881	Padlock	1			
18	4811000128	Plate	1			
20	4812132009	Display Unit	1			
21	4700791588	Panel plug	4			
22	4812126908	Keypad	1			
23	4700904228	Steel plain washer	2			
24	4700570004	Hexagon nut M	2			
25	4812128078	TAB WASHER	1			
26	4700791583	Switch, Driving lights	1	A		
27	4700791584	Switch, Hazard	1	A		
28	4700792413	Switch, Direction indicator	1	A		

Comments for Page: Control panel

(L)OCAL REMARKS

A | Optional

Drivers platform Water tank

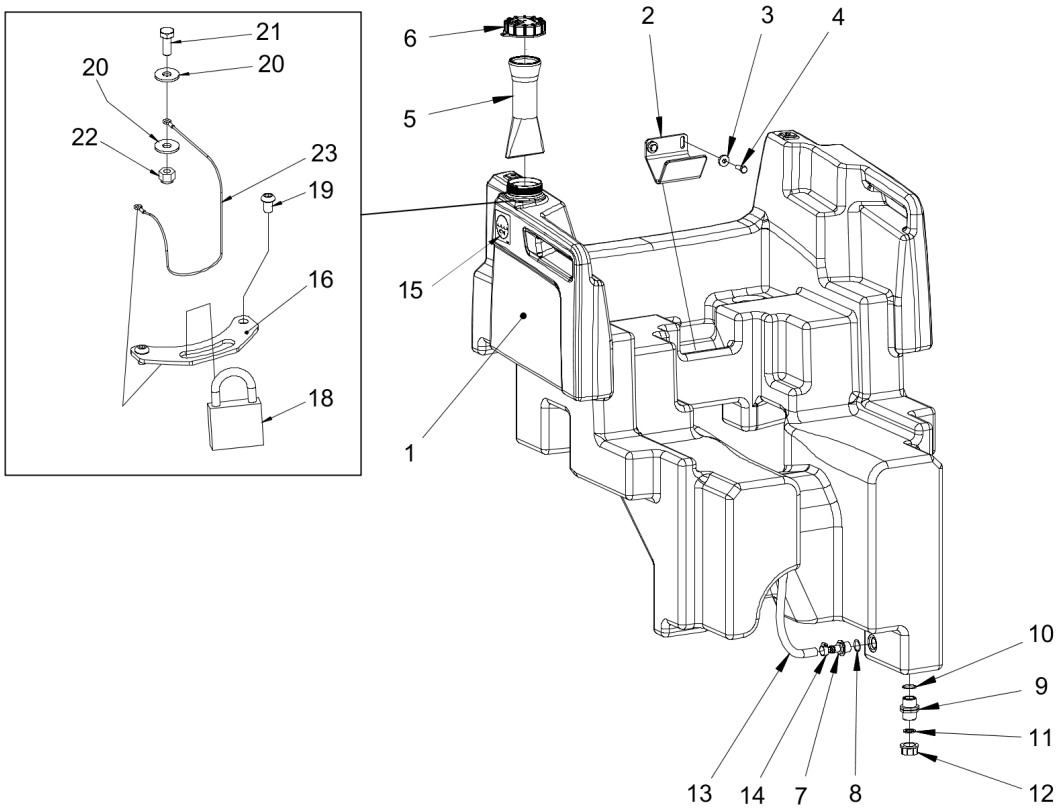

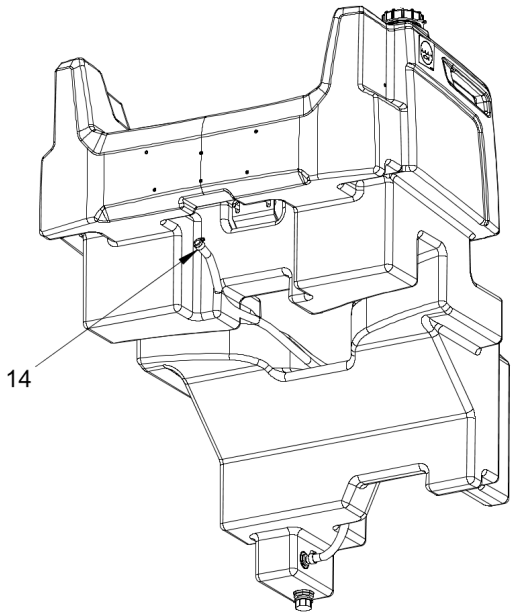

Item	Part No.	Name	Qty	L	C	SN INFO
1	4812124060	Water tank	1			
2	4700387935	Bracket	1			
3	4700904567	Washer, 10.5x28x6 mm	2			

Item	Part No.	Name	Qty	L	C	SN INFO
4	4700500029	Hexagon head screw M	2			
5	4812125924	Strainer	1			
6	4700388087	Tank cap	1			
7	4700396672	Hose connection, plastic	1			
8	4700160313	O-ring 70	1			
9	4812125982	Nipple	1			
10	4700160318	O-ring 70	1			
11	4812125984	Gasket	1			
12	4812125983	Cap	1			
13	4812112074	Plastic hose (x m)	1,25 M			
14	4700313003	Hose clamp	2			
15	4700991657	Decal "WATER"	1			
16	4812125972	Bracket	1			
18	4700358881	Padlock	1			
19	4700902224	Screw, M6x10 mm A2-70	2			
20	4700928381	Washer, 6.4x18x1.6 mm	2			
21	4700500040	Screw, M6x20 mm 8.8 A2K	1			
22	4700586002	Lock nut M	1			
23	4700377253	Wire	1			

Drivers platform Canopy

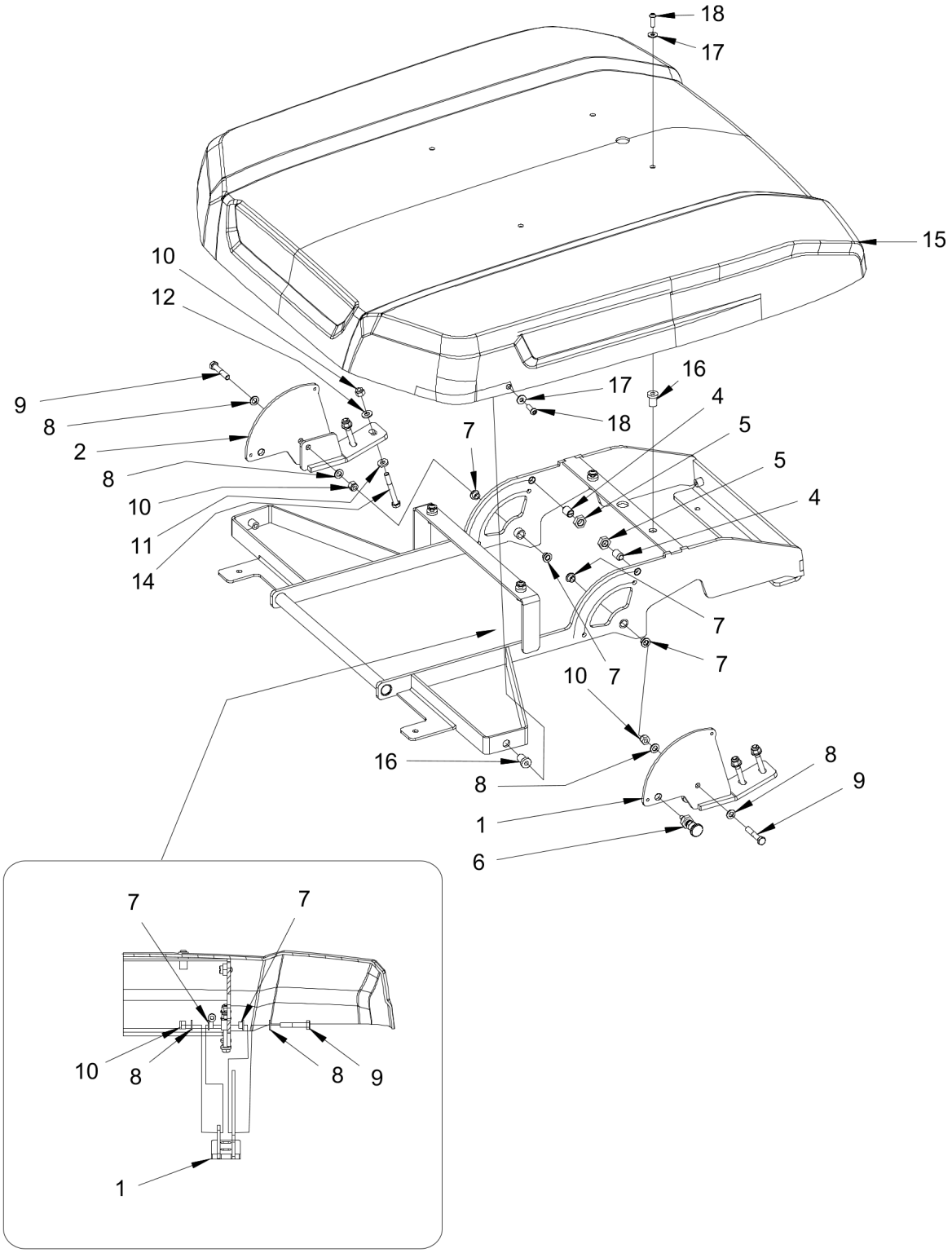

Item	Part No.	Name	Qty	L	C	SN INFO
1	4812126467	Bracket	1			
2	4812126468	Bracket	1			
3	4812126281	Frame	1			

Item	Part No.	Name	Qty	L	C	SN INFO
4	4700922325	Spring ball plunger	2			
5	4700573004	Nut	2			
6	4812126529	Locking pin	1			
7	4700792380	Plastic bushing	4			
8	4700904570	Steel plain washer	4			
9	4700500032	Hexagon Screw M	2			
10	4700586018	Hex bolt M06X020H 8.8 A2K	2			
11	4700904557	Steel plain washer	4			
12	4700904230	Plain washer M10 10.5X22X2.0	4			
14	4700500192	Hexagon head screw M	4			
15	4812126283	Canopy	1			
16	4812113177	Rubber nut	8			
17	4700791304	Steel plain washer	8			
18	4700904654	Screw, M8 x 25 mm A2-70	8			

Drivers platform ROPS

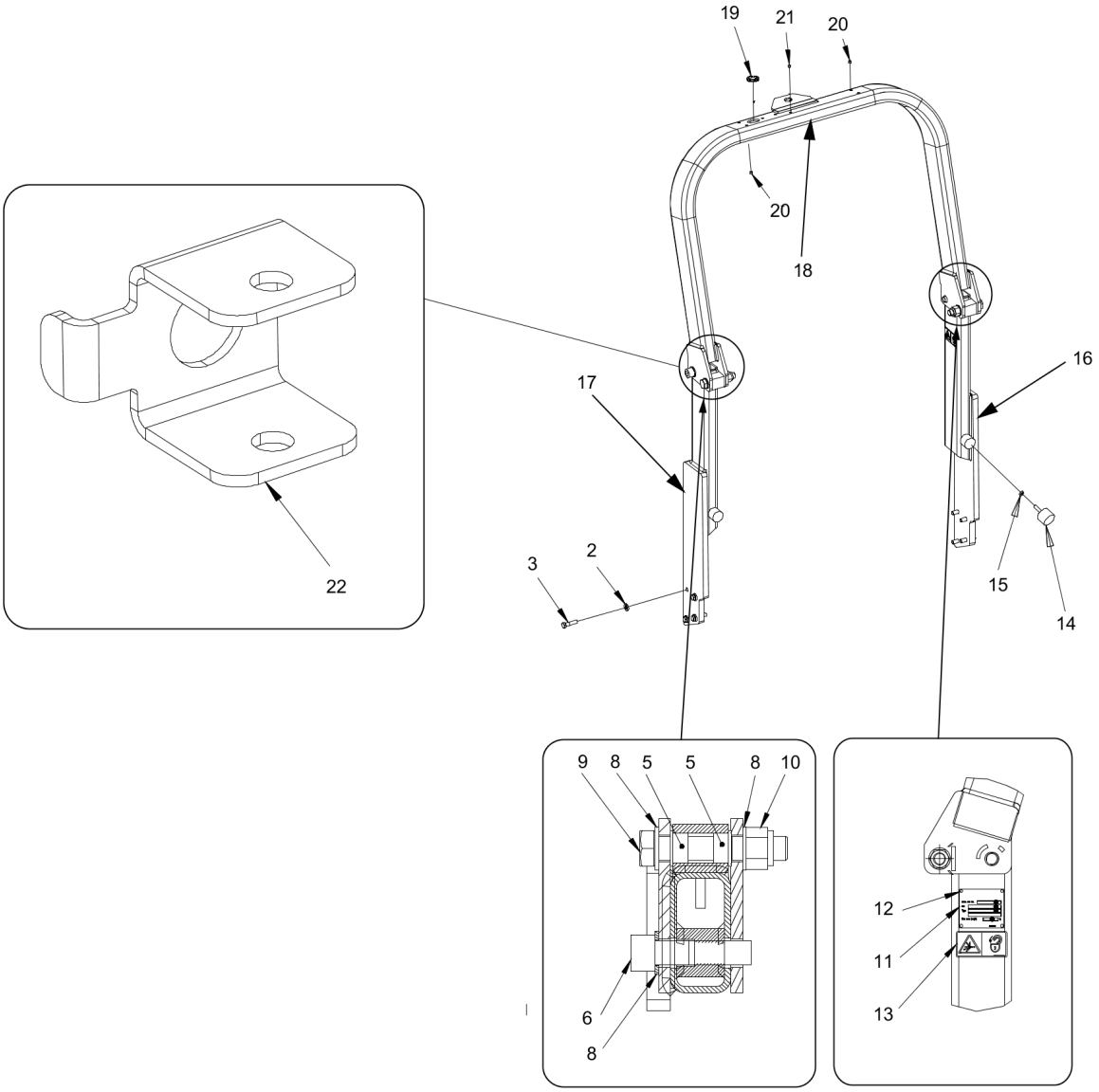

Item	Part No.	Name	Qty	L	C	SN INFO
2	4700904558	Steel plain washer 17x30x6 mm 300 HV	8			
3	4700500070	Hexagon head screw M	8			
5	4700904574	Bushing	4			

Item	Part No.	Name	Qty	L	C	SN INFO
6	0211110375	Hexagon head screw	2			
8	4700904233	Steel plain washer	6			
9	4700901381	Screw	2			
10	0291112843	Lock nut M20	2			
11	-	Sign plate	1			
12	4700624018	Blind rivet	4			
13	4700908229	Safety decal	2			
14	4700288357	Shock absorber	2			
15	4700573008	Nut M8	2			
16	4812126143	ROPS, cpl.	1			
16-1	-	Lower part right	1			
17	-	Lower part left	1			
18	-	Upper part	1			
19	4812114465	Grommet with membrane	2			
20	4700792083	Protective plug	8			
21	4700902919	Plug	2			
22	4812128734	Bracket	1	A		

Comments for Page: ROPS

(L)OCAL REMARKS

A | Optional

Drivers platform Slideable seat

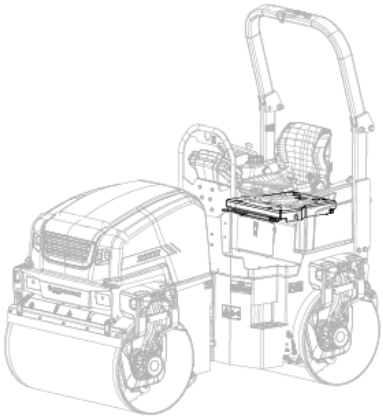

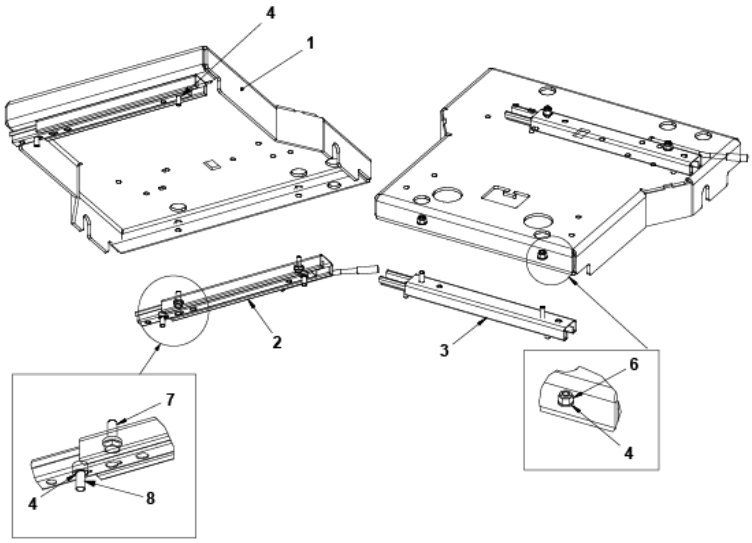

Item	Part No.	Name	Qty	L	C	SN INFO
1	4812126021	Seat frame	1			
2	4700909535	Sliding rail with handle	1			
3	4700909536	Sliding rail	1			

Item	Part No.	Name	Qty	L	C	SN INFO
4	4700904556	Steel plain washer	8			
6	4700586003	Lock nut M8	4			
7	4700500053	Screw, M8x20 mm 8.8 A2K	4			
8	4700508092	Hexagon socket head cap screw M	4			

Drivers platform Fixed seat

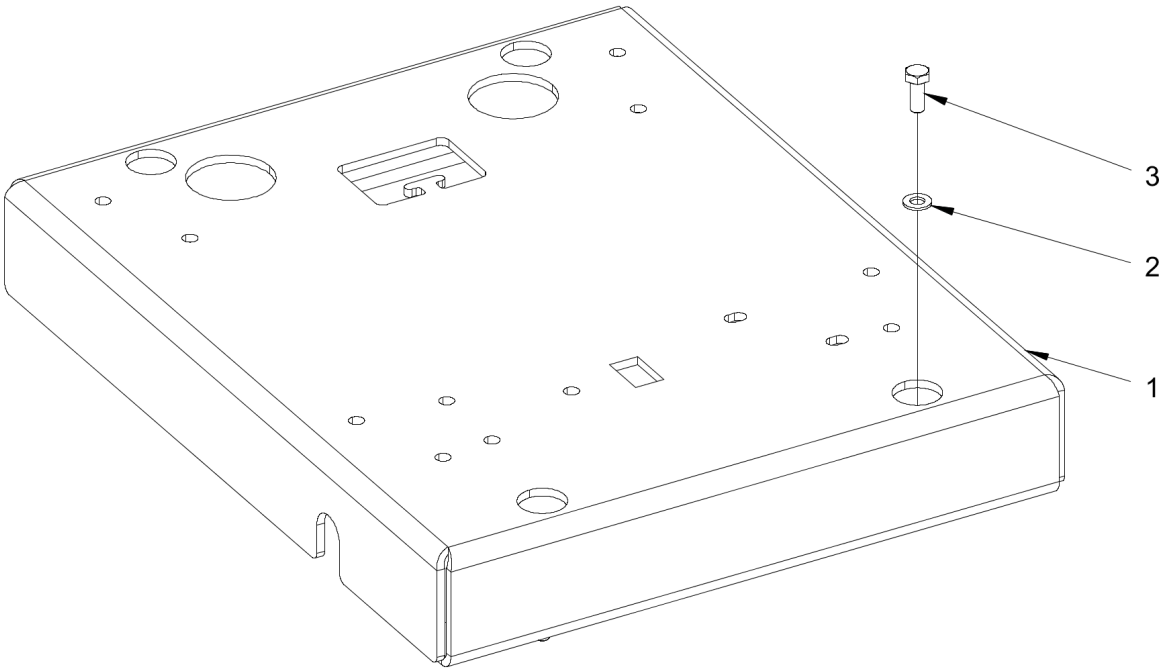

Item	Part No.	Name	Qty	L	C	SN INFO
1	4812126022	Seat frame	1			
2	4700904229	Steel plain washer 8.4X16X1.5	4			
3	4700500053	Screw, M8x20 mm 8.8 A2K	4			

Drivers platform Rear view mirror

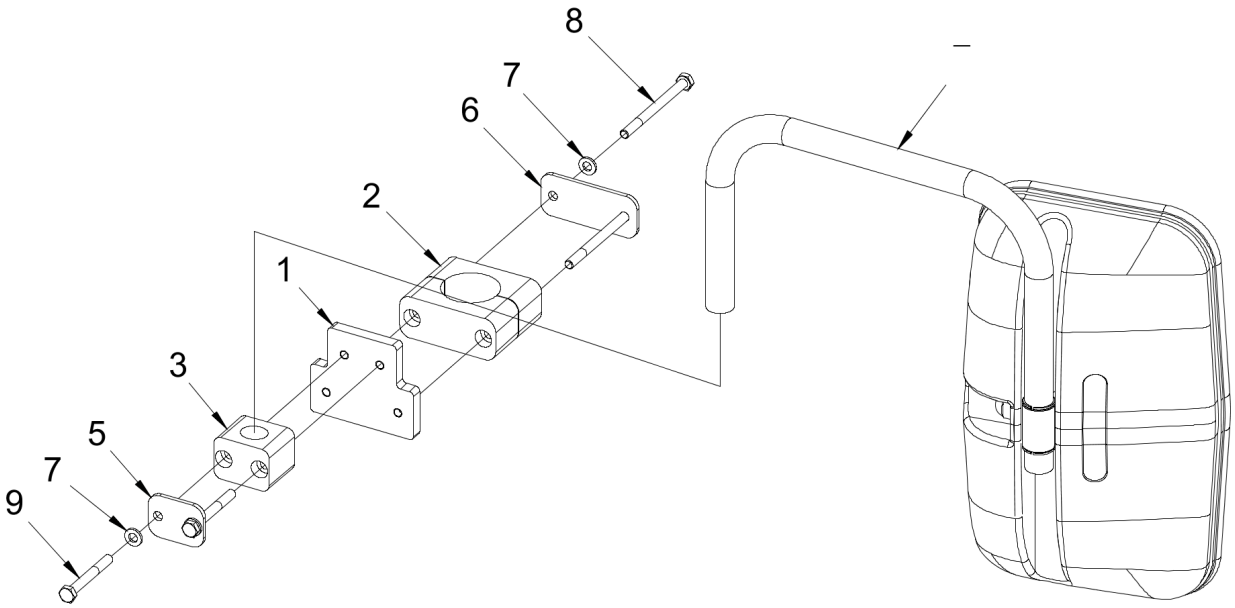

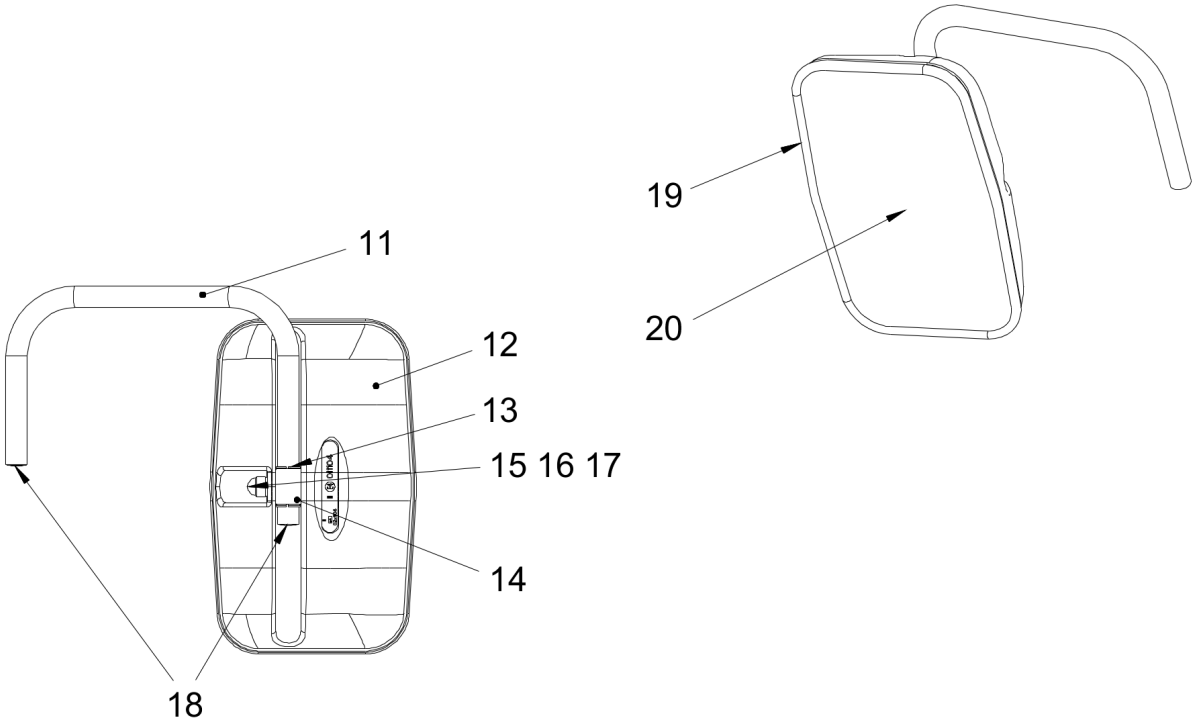

Item	Part No.	Name	Qty	L	C	SN INFO
1	4812126234	Bracket	1			
2	4700924790	Pipe clamp	1			
3	4700791453	Pipe clamp	1			

Item	Part No.	Name	Qty	L	C	SN INFO
5	4700791454	Cover plate	1			
6	4700924791	Cover plate	1			
7	4700904228	Steel plain washer	4			
8	4700500292	Hexagon head screw M6x75	2			
9	4700500079	Hexagon head screw M	2			
10	4700393204	Rear view mirror	1			
11	4700359661	Arm	1			
12	4700393205	Mirror	1			
13	-	Washer	1			
14	-	Clamp	1			
15	4700500023	Screw M8x45	1			
16	4700904229	Steel plain washer 8.4X16X1.5	1			
17	4700904203	Nut protection	1			
18	4700900519	Plug	2			
19	4700393206	Edge trim	1			
20	4700903722	Mirror glass	1			

Drivers platform Throttle control

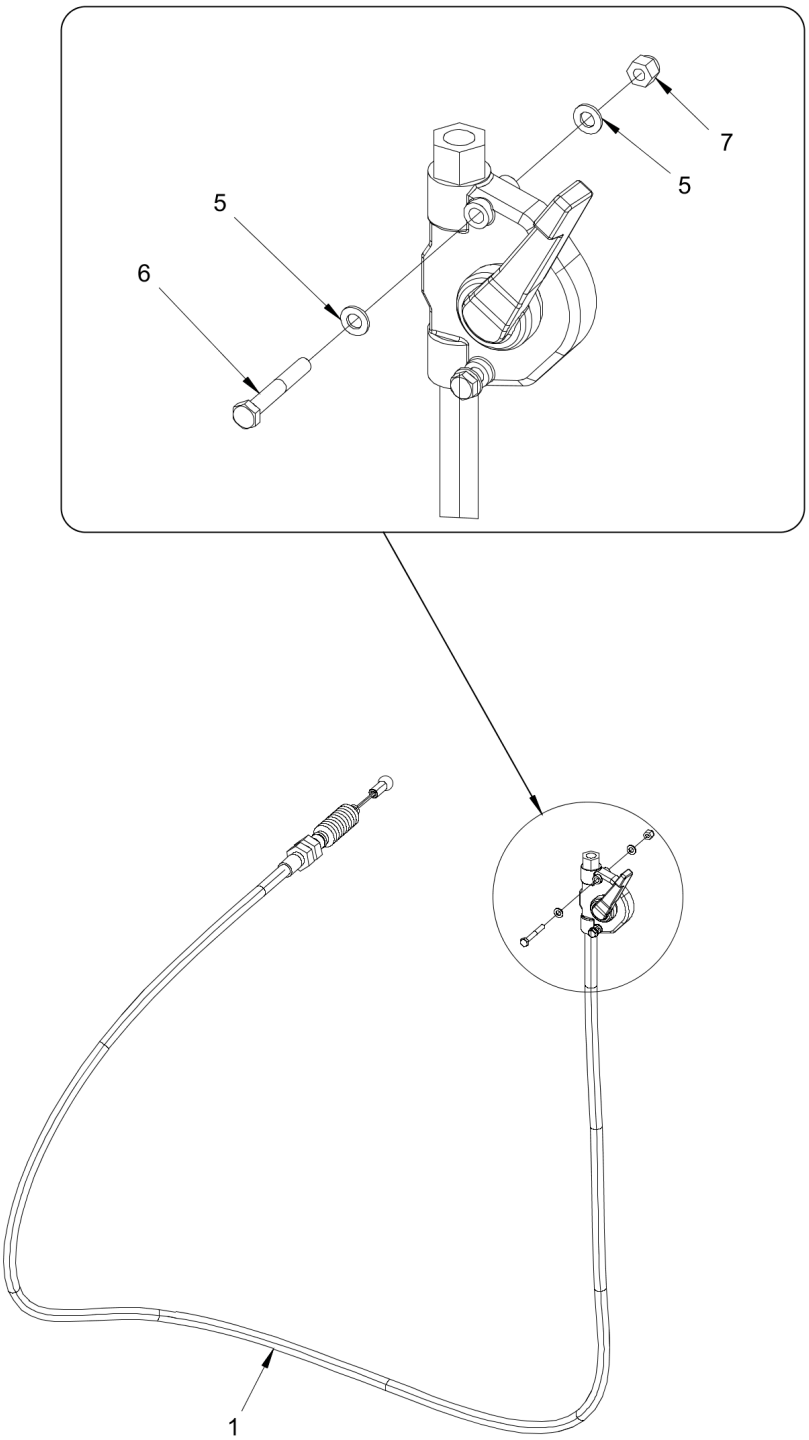

Item	Part No.	Name	Qty	L	C	SN INFO
1	4812126251	Throttle control	1			
2	4812126277	Bracket	1			
3	4700904228	Steel plain washer	2			

Item	Part No.	Name	Qty	L	C	SN INFO
4	4700500040	Screw, M6x20 mm 8.8 A2K	2			
5	4700904281	Steel plain washer	4			
6	4700500009	Hexagon head screw M	2			
7	4700586001	Lock nut M	2			

Drivers platform Control module (1-button) - Right side

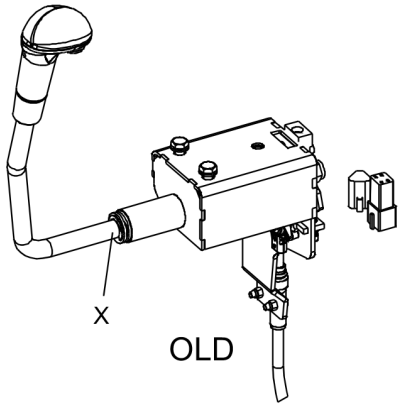

NOTE:

If your machine have “dual levers” and one of 4812126118, 19, 20 or 21 need to be replaced then both left and right hand lever need to be replaced with 4812130902, 03 or 04 (depending on button configuration) and 4812130905

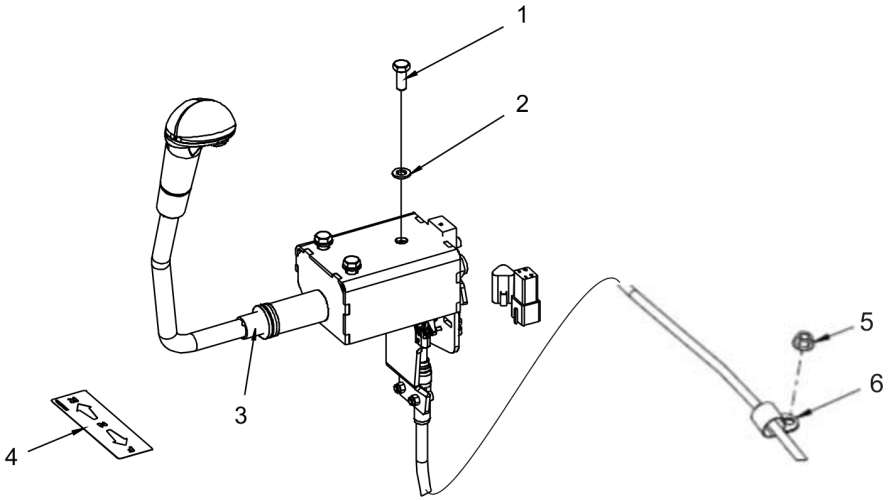

Item	Part No.	Name	Qty	L	C	SN INFO
1	4700500053	Screw, M8x20 mm 8.8 A2K	3			
2	4700904229	Steel plain washer 8.4X16X1.5	3			
X	4812126118	F/R lever (1-button), cpl. (OLD version - Replaced see comment)				
Comments for Part Num. 4812126118 Important information from Service Department - for rollers with dual F/R controls, both sides must be replaced = customer must buy 1 pc 4812130902 and 1 pc 4812130905 to replace 4812126118.						
3	4812130902	F/R lever (1 button, single), cpl.	1			
4	4812130376	Decal, FNR lever	1			
5	4700792817	Hexagon nut with flange	1			
6	4700921161	Pipe clamp	1			

Drivers platform 4812130902 Control (1-button, single)

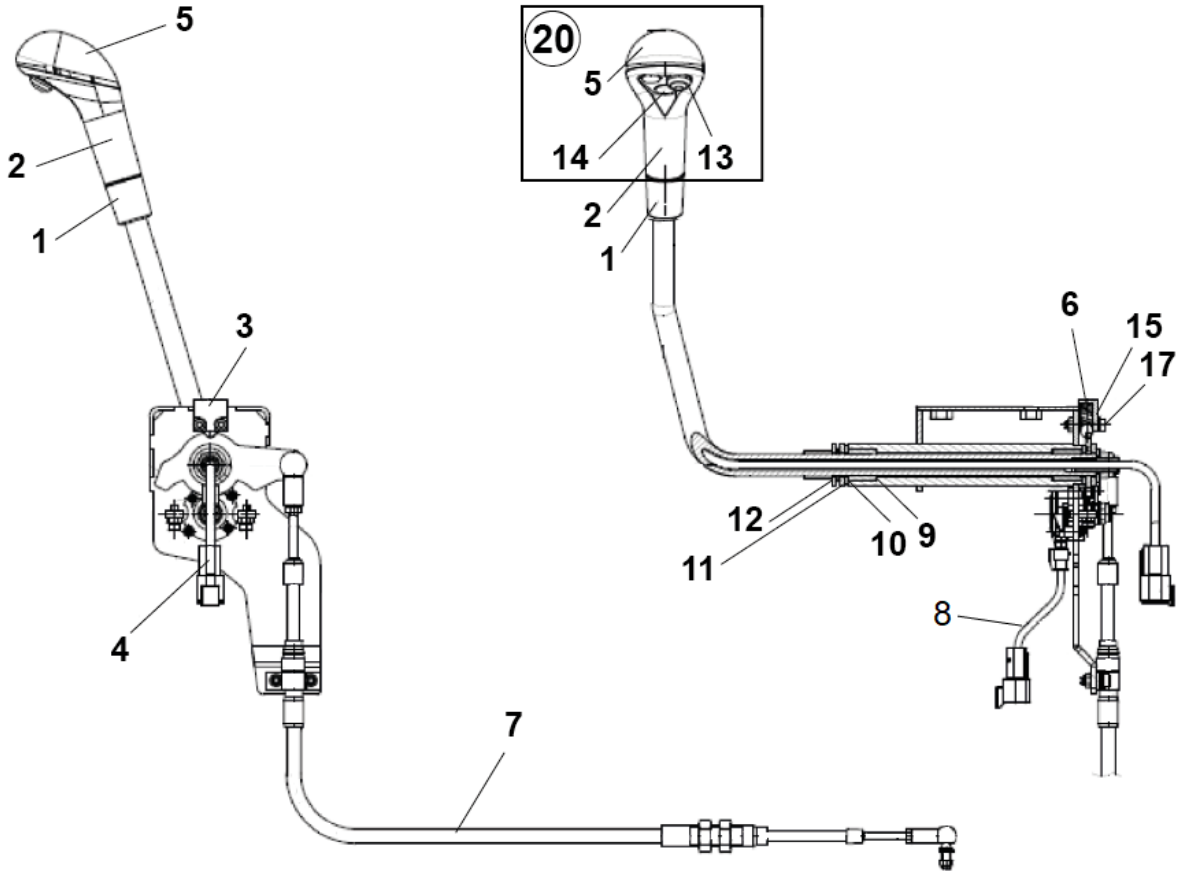

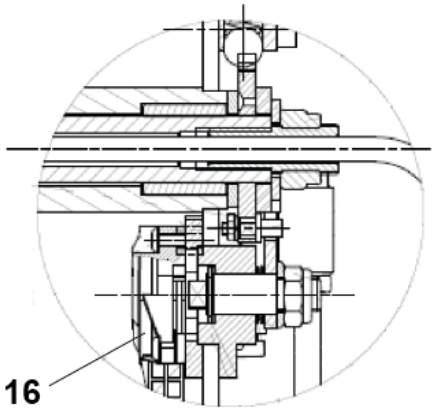

Item	Part No.	Name	Qty	L	C	SN INFO
0	4812130902	F/R lever (1 button, single), cpl.	1			
1	4812156562	Sleeve (knob)	1			
2	4812156559	Handle	1			

Item	Part No.	Name	Qty	L	C	SN INFO
3	4812162478	Holder	1			
4	4812162467	Harness (2-poles)	1			
6	-	Spring	1			
7	4812130906	Cable	1			
8	4812160381	Sensor harness	1			
9	4812162469	Bushing	2			
10	4812162470	Washer, nylon	2			
11	4812162471	Ring	2			
12	-	Washer	2			
15	4812156565	Sphere	1			
16	4812156490	Potentiometer	1			
17	-	Elastic washer	2			
20	4812162853	Handle top kit	1			
5	4812162477	Handle top	1			
13	4812162462	Push button	1			
14	4812156561	Protection plug	2			

Drivers platform Control module (Dual, 2-buttons) - Left side

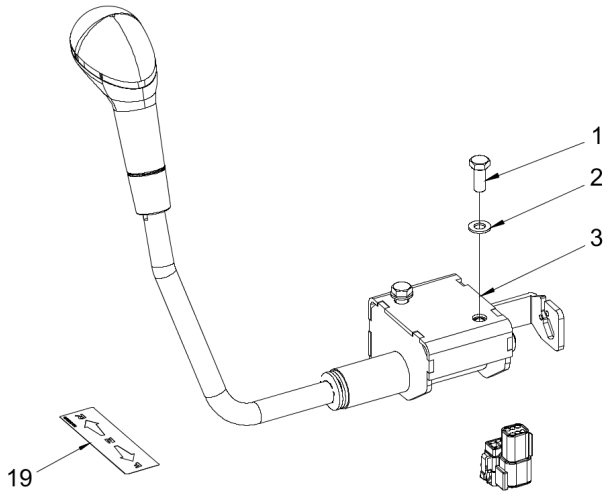

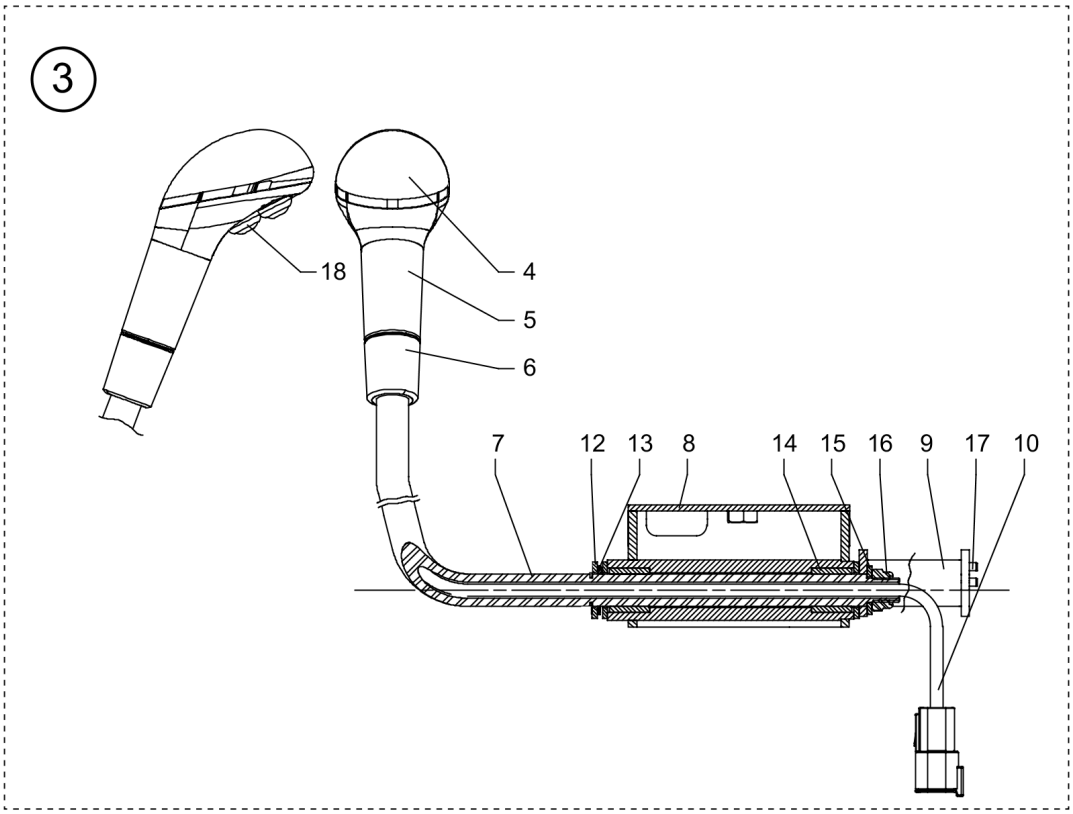

Item	Part No.	Name	Qty	L	C	SN INFO
1	4700500053	Screw, M8x20 mm 8.8 A2K	2			
2	4700904229	Steel plain washer 8.4X16X1.5	2			
3	4812130905	F/R lever (2 buttons, dual), cpl.	1			

Item	Part No.	Name	Qty	L	C	SN INFO
4	4812156558	Handle top	1			
5	4812156559	Handle	1			
6	-	Handle safety part	1			
7	-	Shaft	1			
9	-	Fork	2			
10	-	Wire harness	2			
12	-	Gasket	2			
13	-	Sealing	2			
14	-	Washer	2			
15	-	Gasket	2			
16	-	Lock nut	1			
17	-	Pin	2			
18	-	Lock ring	2			
19	4812130376	Decal, FNR lever	1			

Drivers platform Control module (2-buttons) - Right side

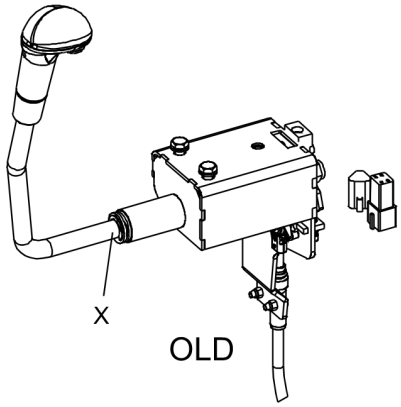

NOTE:

If your machine have “dual levers” and one of 4812126118, 19, 20 or 21 need to be replaced then both left and right hand lever need to be replaced with 4812130902, 03 or 04 (depending on button configuration) and 4812130905

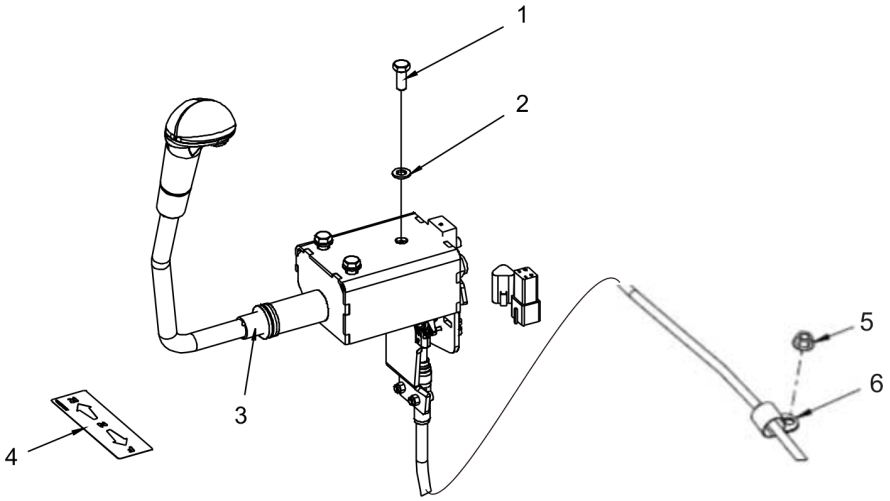

Item	Part No.	Name	Qty	L	C	SN INFO
1	4700500053	Screw, M8x20 mm 8.8 A2K	3			
2	4700904229	Steel plain washer 8.4X16X1.5	3			
X	4812126119	F/R lever (2-buttons), cpl. (OLD version - Replaced see comments)				
Comments for Part Num. 4812126119 Important information from Service Department - for rollers with dual F/R controls, both sides must be replaced = customer must use 1 pc 4812130903 and 1 pc 4812130905 to replace 4812126119.						
3	4812130903	F/R lever (2 buttons), cpl.	1			
4	4812130376	Decal, FNR lever	1			
5	4700792817	Hexagon nut with flange	1			
6	4700921161	Pipe clamp	1			

Drivers platform 4812130903 Control (2-buttons)

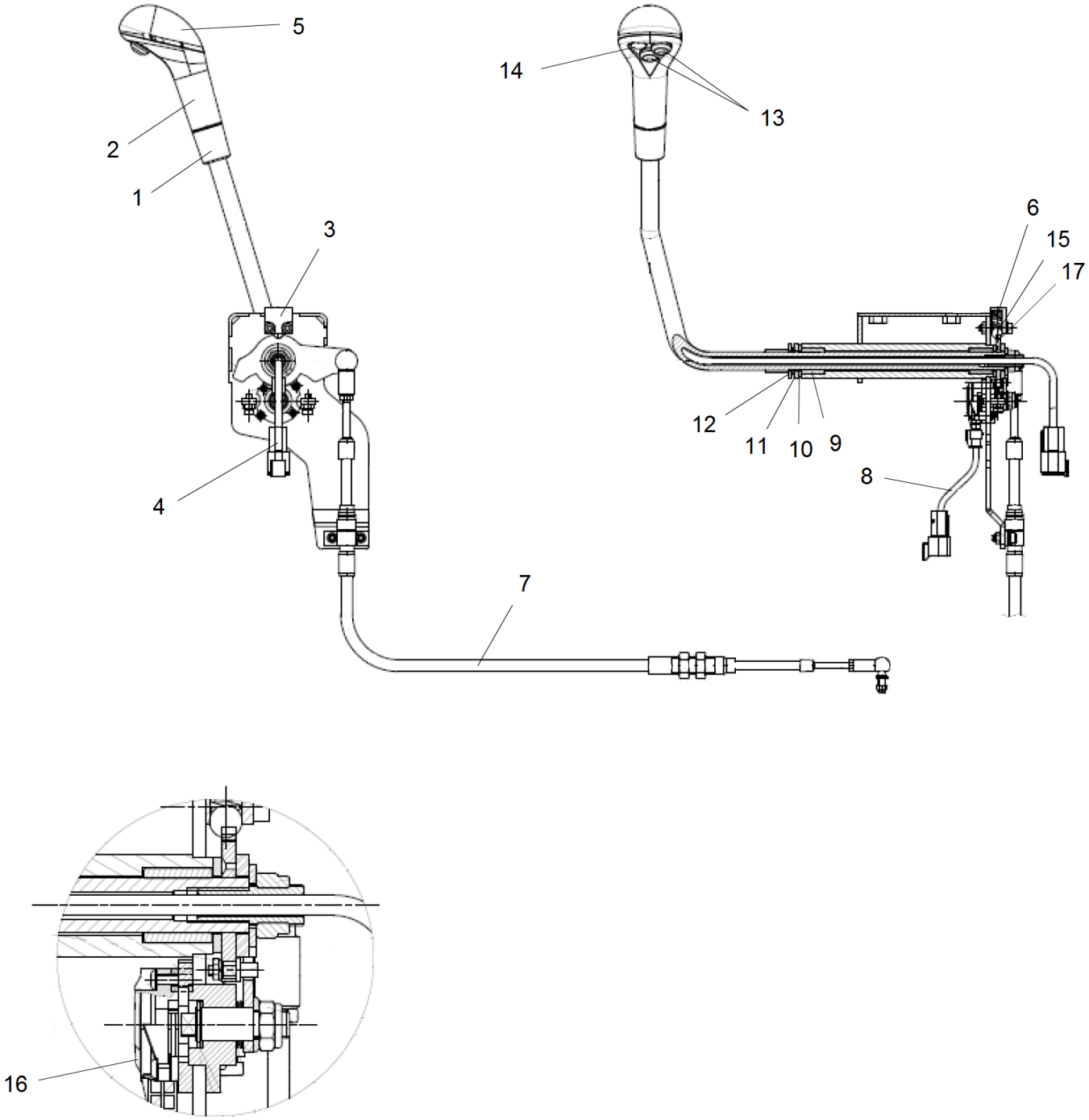

Item	Part No.	Name	Qty	L	C	SN INFO
0	4812130903	F/R lever (2 buttons), cpl.	1			
1	4812156562	Sleeve (knob)	1			
2	4812156559	Handle	1			
3	4812162478	Holder	1			
4	4812162467	Harness (2-poles)	1			
6	-	Spring	1			

Item	Part No.	Name	Qty	L	C	SN INFO
7	4812130906	Cable	1			
8	4812160381	Sensor harness	1			
9	4812162469	Bushing	2			
10	4812162470	Washer, nylon	2			
11	4812162471	Ring	2			
12	-	Washer	2			
15	4812156565	Sphere	1			
16	4812156490	Potentiometer	1			
17	-	Elastic washer	2			
20	4812162853	Handle top kit	1			
5	4812162477	Handle top	1			
13	4812162462	Push button	2			
14	4812156561	Protection plug	1			

Drivers platform Controle module (3-buttons) - Right side

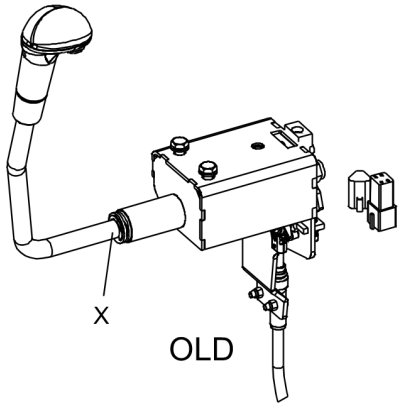

NOTE:

If your machine have “dual levers” and one of 4812126118, 19, 20 or 21 need to be replaced then both left and right hand lever need to be replaced with 4812130902, 03 or 04 (depending on button configuration) and 4812130905

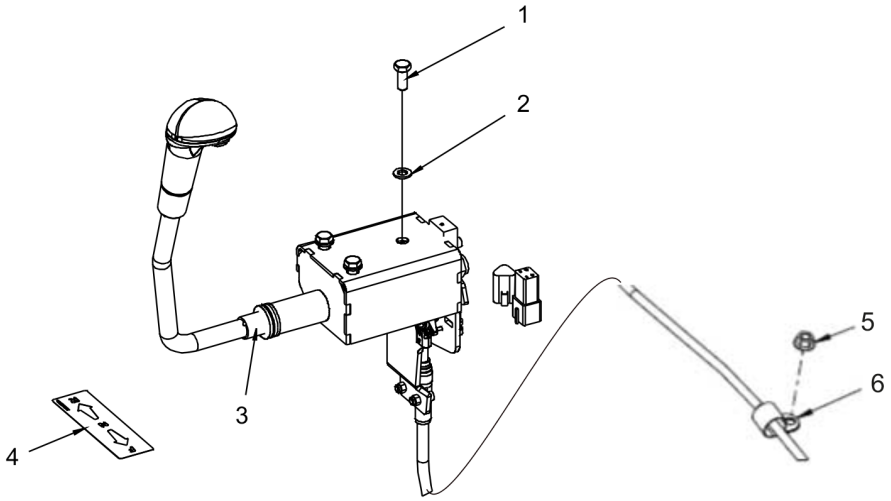

Item	Part No.	Name	Qty	L	C	SN INFO
1	4700500053	Screw, M8x20 mm 8.8 A2K	3			
2	4700904229	Steel plain washer 8.4X16X1.5	3			
X	4812126120	F/R lever (3-buttons), cpl. (OLD version - Replaced see comments)				
Comments for Part Num. 4812126120 Important information from Service Department - for rollers with dual F/R controls, both sides must be replaced = customer must buy 1 pc 4812130904 and 1 pc 4812130905 to replace 4812126120.						
3	4812130904	F/R lever (3 buttons, single), cpl.	1			
4	4812130376	Decal, FNR lever	1			
5	4700792817	Hexagon nut with flange	1			
6	4700921161	Pipe clamp	1			

Drivers platform 4812130904 Control (3-buttons)

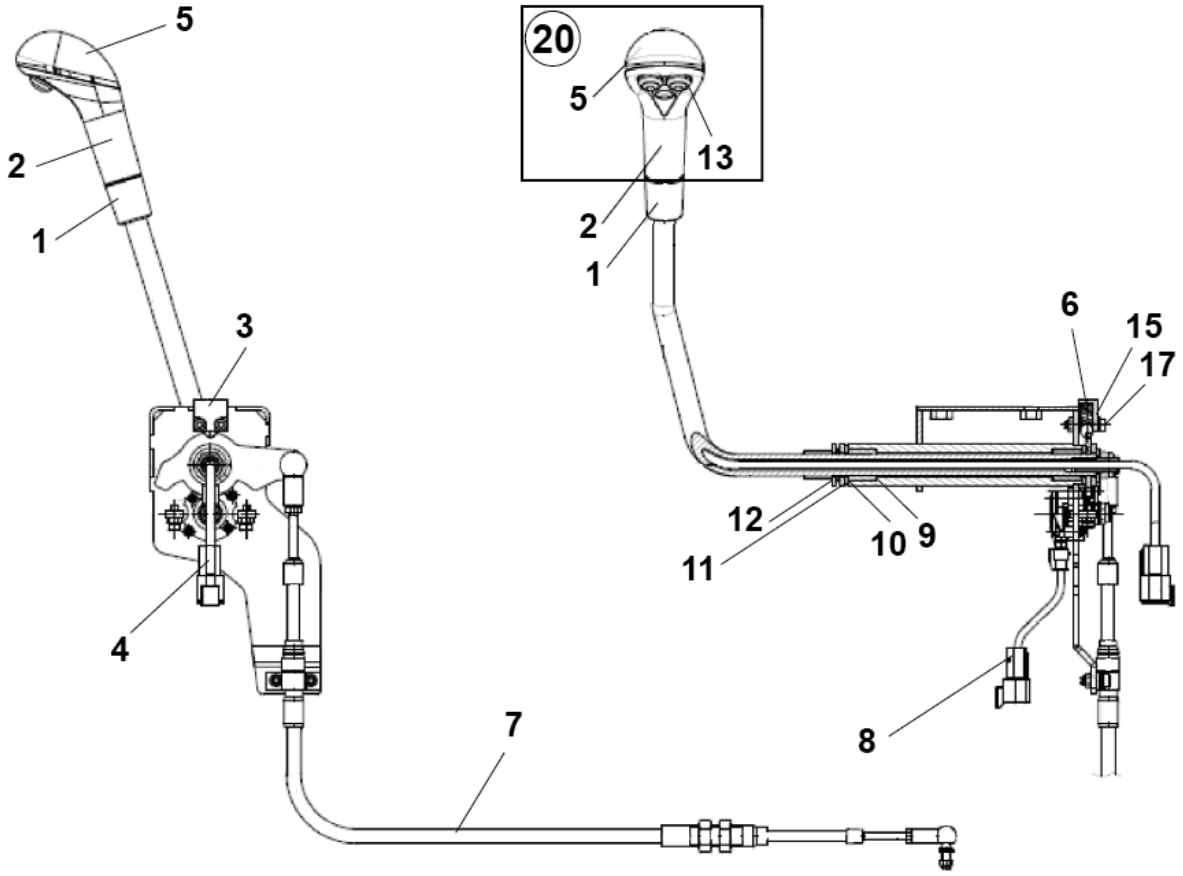

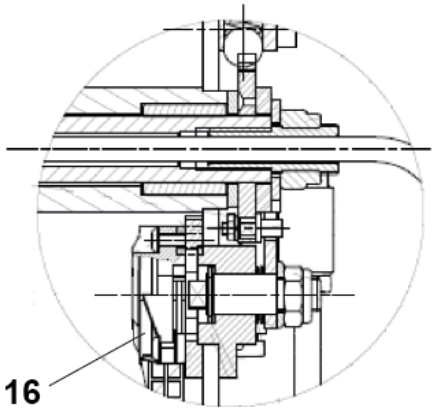

Item	Part No.	Name	Qty	L	C	SN INFO
0	4812130904	F/R lever (3 buttons, single), cpl.	1			
1	4812156562	Sleeve (knob)	1			
2	4812156559	Handle	1			

Item	Part No.	Name	Qty	L	C	SN INFO
3	4812162478	Holder	1			
4	4812162467	Harness (2-poles)	1			
6	-	Spring	1			
7	4812130906	Cable	1			
8	4812160381	Sensor harness	1			
9	4812162469	Bushing	2			
10	4812162470	Washer, nylon	2			
11	4812162471	Ring	2			
12	-	Washer	2			
15	4812156565	Sphere	1			
16	4812156490	Potentiometer	1			
17	-	Elastic washer	2			
20	4812162853	Handle top kit	1			
5	4812162477	Handle top	1			
13	4812162462	Push button	3			
14	4812156561	Protection plug	2			

Drivers platform Driver's seat, without armrests

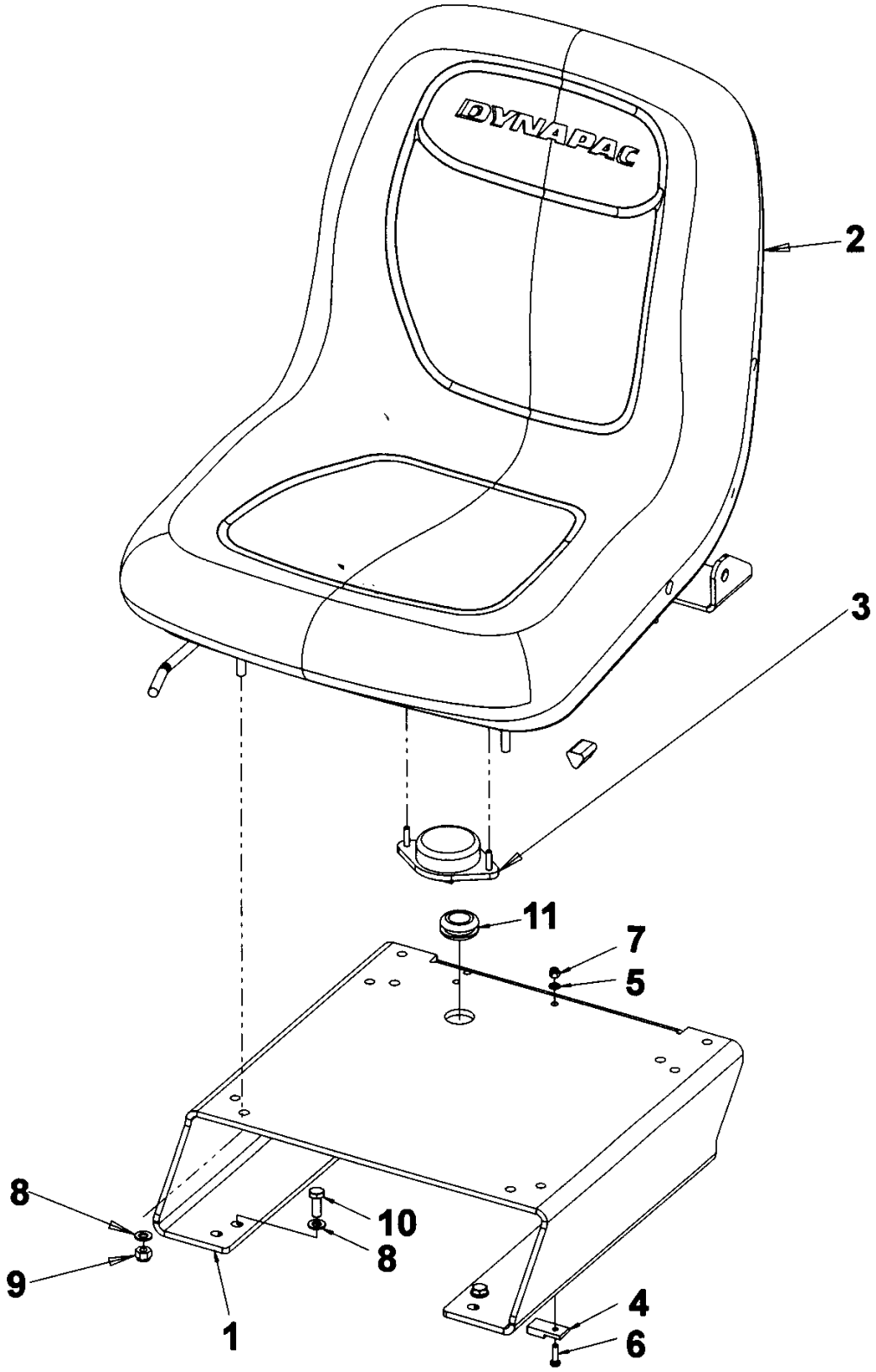

Item	Part No.	Name	Qty	L	C	SN INFO
1	4812112669	Seat frame	1			
2	4812114466	Driver seat, cpl	1			
3	4812127388	Seat switch NO/NC	1			
4	4700904218	Holder	1			
5	4700904281	Steel plain washer	1			
6	4700533070	Screw	1			
7	4700586001	Lock nut M	1			
8	4700904229	Steel plain washer 8.4X16X1.5	8			
9	4700586003	Lock nut M8	4			
10	4700500020	Hex. screw	4			
11	4700903192	Grommet	1			

Drivers platform Comfort seat with heat module

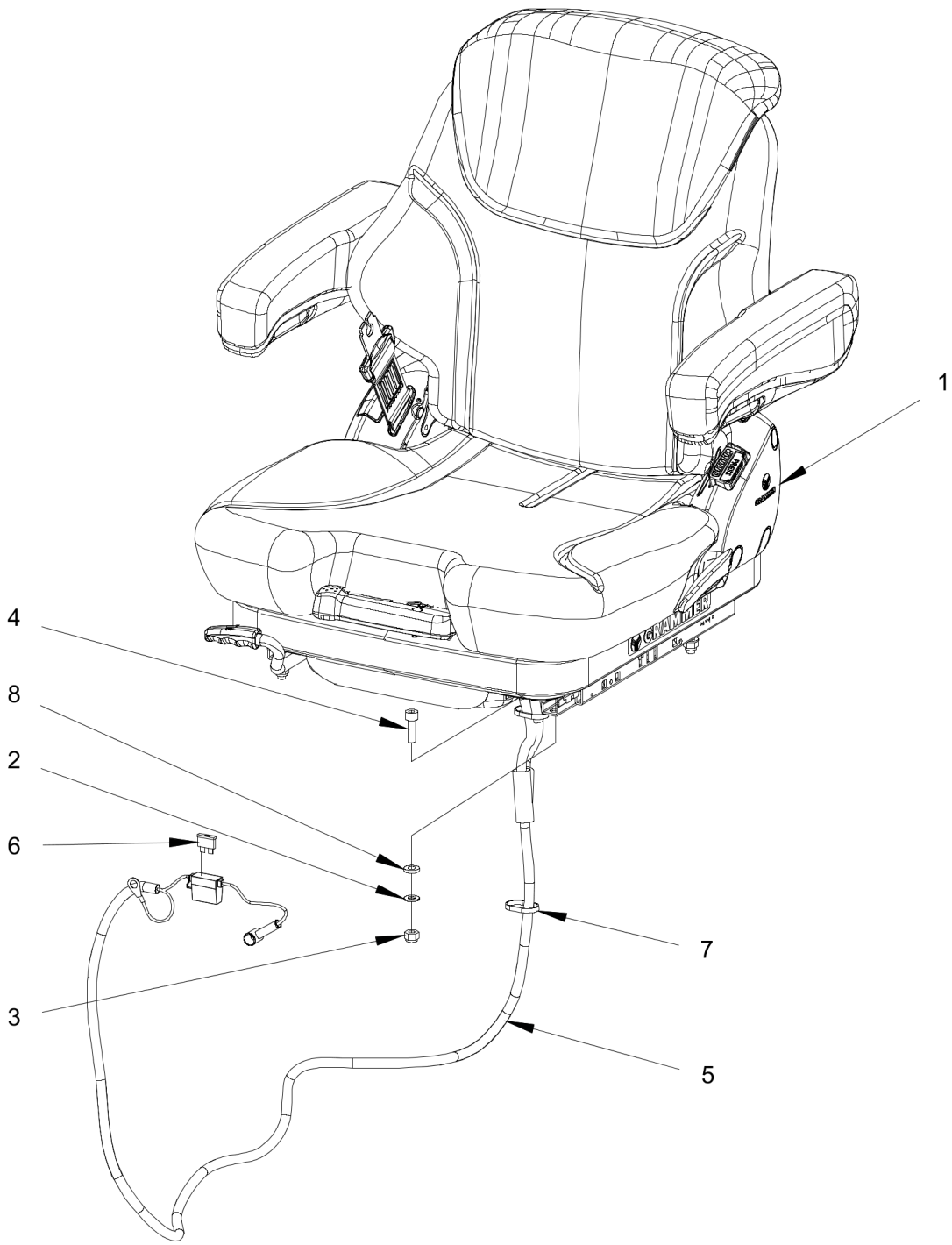

Item	Part No.	Name	Qty	L	C	SN INFO
1	4812127213	Comfort seat, with heat module	1			
1.1	4812162777	Seat switch	1			
2	4700904229	Steel plain washer 8.4X16X1.5	4			

Item	Part No.	Name	Qty	L	C	SN INFO
3	4700586003	Lock nut M8	4			
4	4700508019	Cylinder screw	4			
5	4812127324	Cable harness	1			
6	4700901227	Fuse 10A Red	1			
7	4700313041	Cable tie	N			
8	4700904556	Steel plain washer	4			

Drivers platform Comfort seat without heat module

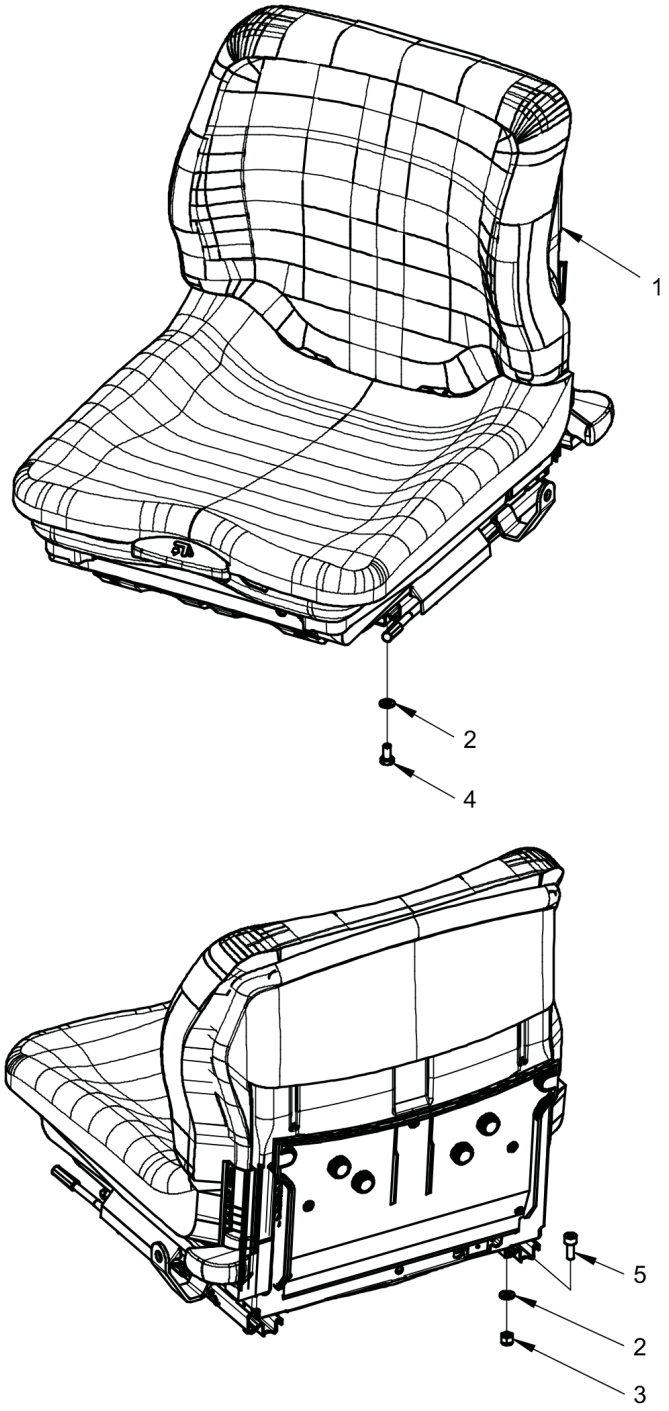

Item	Part No.	Name	Qty	L	C	SN INFO
1	4700372570	Seat, galon suspensioned	1			
1	4700936283	Seat switch	1			
2	4700904229	Steel plain washer 8.4X16X1.5	4			

Item	Part No.	Name	Qty	L	C	SN INFO
3	4700586003	Lock nut M8	2			
4	4700500019	Hexagon head screw M	2			
5	4700508092	Hexagon socket head cap screw M	2			

Drivers platform ECU module

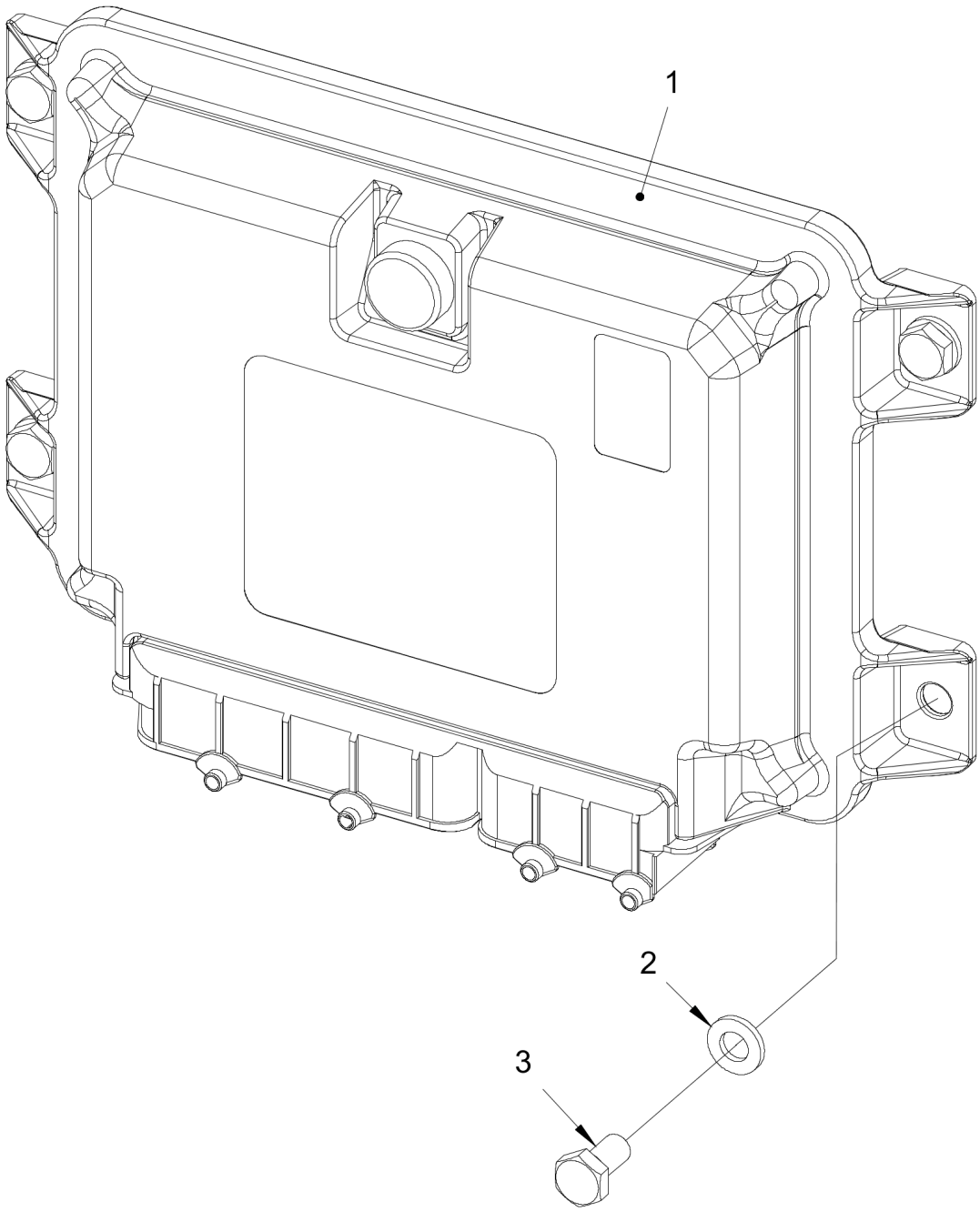

Item	Part No.	Name	Qty	L	C	SN INFO
1	4812125677	Control unit	1			
2	4700904228	Steel plain washer	4			
3	4700500012	Hexagon head screw M	4			

Drivers platform Cup and can holder

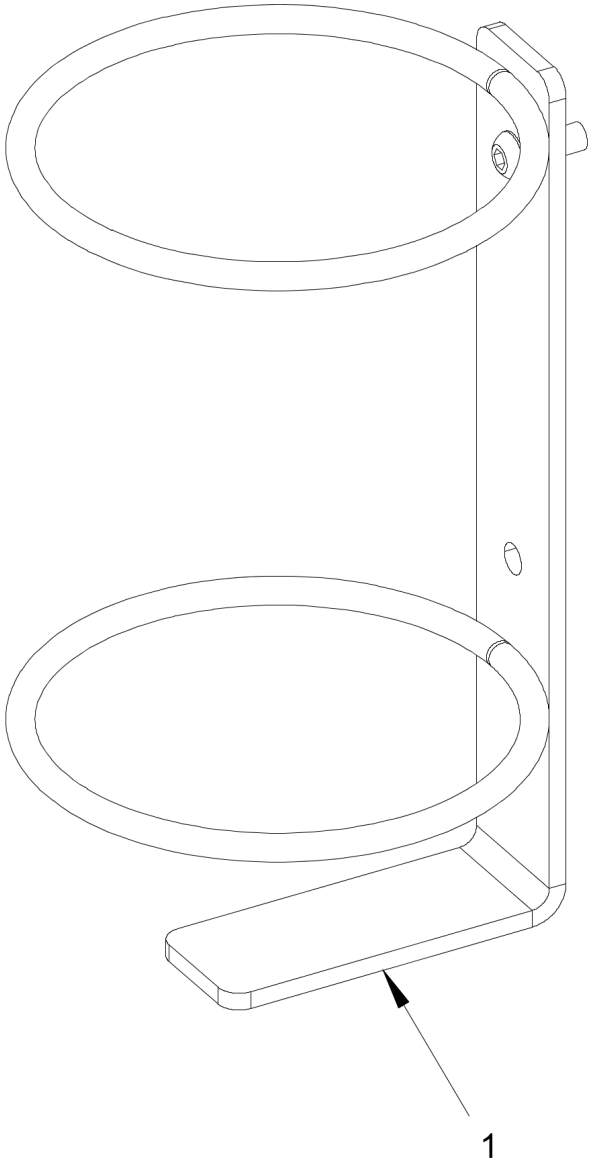

Item	Part No.	Name	Qty	L	C	SN INFO
1	4812127395	Bracket	1			

Decals Decals

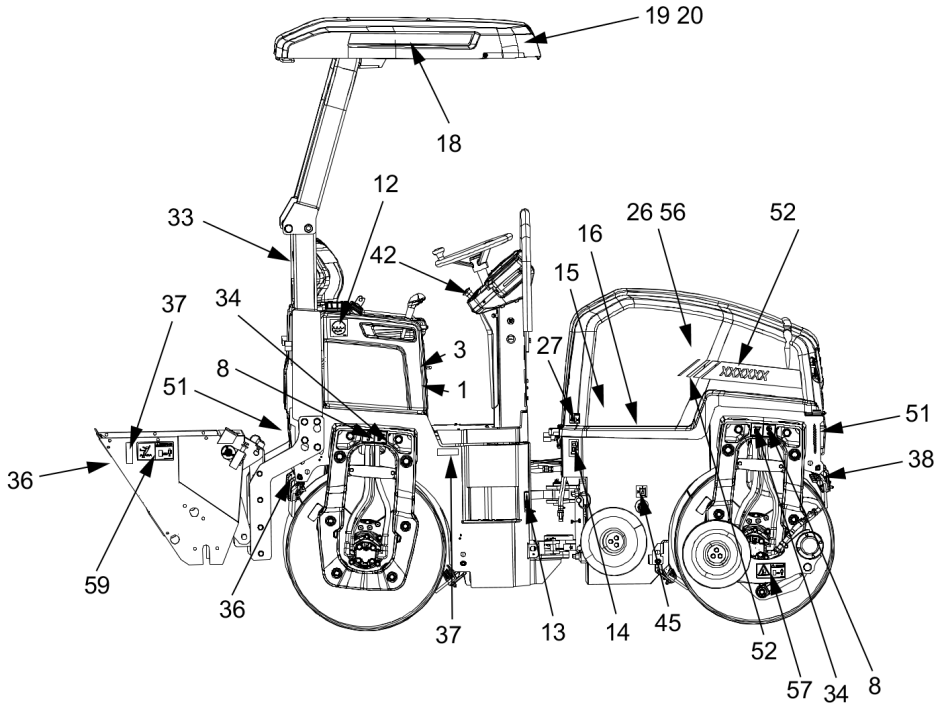

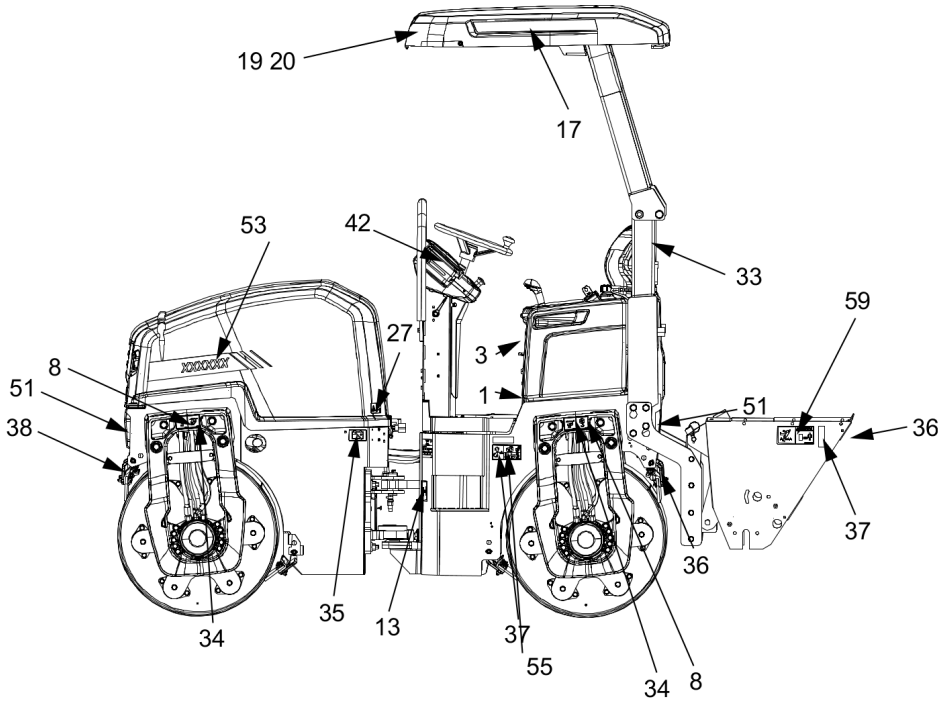

Item	Part No.	Name	Qty	L	C	SN INFO
1	4700903459	Decal "SAFETY"	1			
3	4700903425	Decal "SAFETY MANUAL"	1			
8	4700357587	Label lifting point	4			

Item	Part No.	Name	Qty	L	C	SN INFO
12	4700991657	Decal "WATER"	1			
13	4700903422	Safety decal "HAZARDOUS AREA"	2			
14	4700991658	Decal fuel, Diesel	1			
14-2	4811000345	Decal "ULTRA LOW SULFUR FUEL ONLY"	1			
15	4811000344	Decal, low sulfur	1			
16	4700792772	Decal "BIO HYDRAULIC OIL" PANOLIN	1			
17	4812128236	Decal, cosmetic	1			
18	4812128221	Decal, cosmetic	1			
19	4812127713	Decal FAYAT DYNAPAC 280 WH	1			
20	4812128167	Decal, cosmetic	1			
26	4700903423	Safety decal, Rotating engine components	1			
27	4700903424	Decal hot surface	2			
28	4700272372	Decal, hydraulic oil	1			
33	4700908229	Safety decal	2			
34	4700382751	Decal "SECURING POINT/TIE DOWN"	4			
35	4700904835	Decal Battery power-disconnect	1			
36	4700377742	Reflector, red	2			
37	4700377744	Reflector, yellow	2			
38	4700377743	Reflector white	2			
40	4700791274	Decal "Sound power level" 104 dB	1			
42	4811000128	Plate	1			
45	4700272373	Decal, hydraulic oil level	1			
51	4812127714	Decal FAYAT DYNAPAC 350 WH	2			
52	4812128476	Decal model code combined, left CC1200 VI (right side)	1			
52-1		Decal "GRAPHIC ELEMENT" Left version	1			
52-2		Decal "MODEL CODE" CC1200	1			
53	4812128477	Decal model code combined, right CC1200 VI (left side)	1			
53-1		Decal "GRAPHIC ELEMENT" Right version	1			
53-2		Decal "MODEL CODE" CC1200	1			
55	4812125363	Safety decal "RISK OF CRUSHING"	1			
56	4812161669	Service kit decal (D1703)	1			
56	4812161670	Service kit decal (D1803)	1			
57	4700904083	Safety decal	1			
59	4811000080	Safety decal	2			

Comments for Page: Decals

(L)OCAL REMARKS

A | H = 80 mm

B | H = 118 mm

C| H = 107 mm

Decals Decal kit, CC1200 VI

NO EXPLODED VIEW
AVAILABLE
FOR THIS BOM

Item	Part No.	Name	Qty	L	C	SN INFO
1	4812163381	Decal kit, CC1200 VI	1			
1.1	4700903459	Decal "SAFETY"	1			
1.2	4700903425	Decal "SAFETY MANUAL"	1			
1.3	4700357587	Label lifting point	4			
1.4	4700991657	Decal "WATER"	1			
1.5	4700903422	Safety decal "HAZARDOUS AREA"	2			
1.6	4811000345	Decal "ULTRA LOW SULFUR FUEL ONLY"	1			
1.7	4811000344	Decal, low sulfur	1			
1.8	4700903423	Safety decal, Rotating engine components	1			
1.9	4700903424	Decal hot surface	2			
1.10	4700908229	Safety decal	2			
1.11	4700382751	Decal "SECURING POINT/TIE DOWN"	4			
1.12	4700904835	Decal Battery power-disconnect	1			
1.13	4700272373	Decal, hydraulic oil level	1			
1.14	4812127714	Decal FAYAT DYNAPAC 350 WH	2			

Item	Part No.	Name	Qty	L	C	SN INFO
1.15	4812128476	Decal model code combined, left CC1200 VI (right side)	1			
1.16	4812128477	Decal model code combined, right CC1200 VI (left side)	1			
1.17	4812125363	Safety decal "RISK OF CRUSHING"	1			

Reflector module, Working lights Up to: xA026864 Reflector module, Working lights

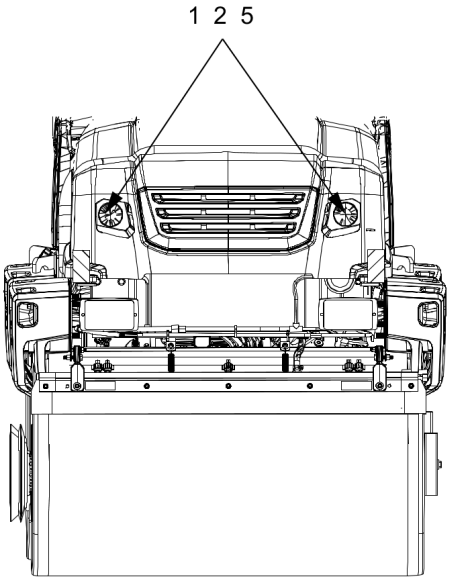

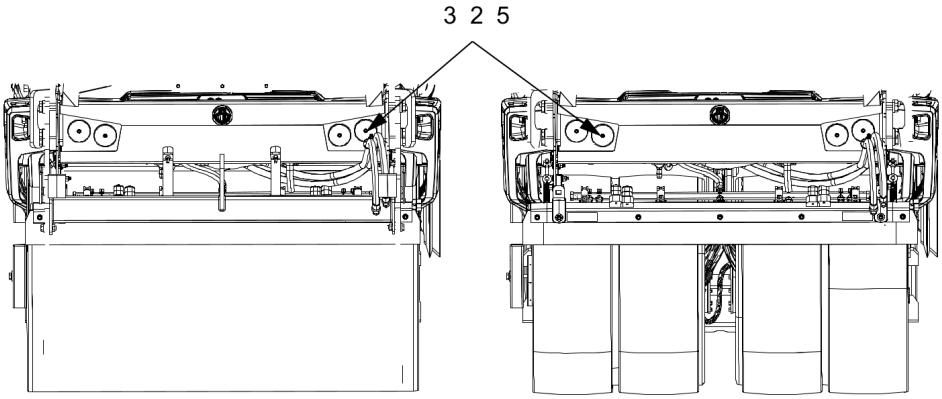

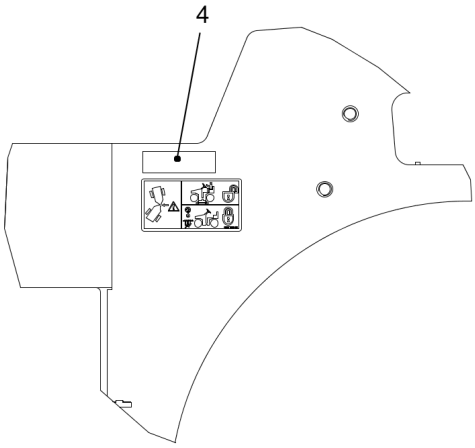

Item	Part No.	Name	Qty	L	C	SN INFO
1	4700791957	Reflector, white	2			
2	4700791666	Blind rivet	6			
3	4700791956	Reflector, red	4			

Item	Part No.	Name	Qty	L	C	SN INFO
4	4700377744	Reflector, yellow	2			
5	4700904228	Steel plain washer	6			

Reflector module, Working lights From: xA026865 Reflector module, Working lights

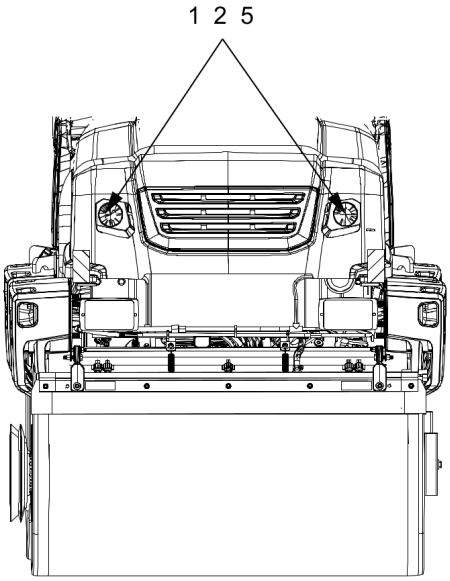

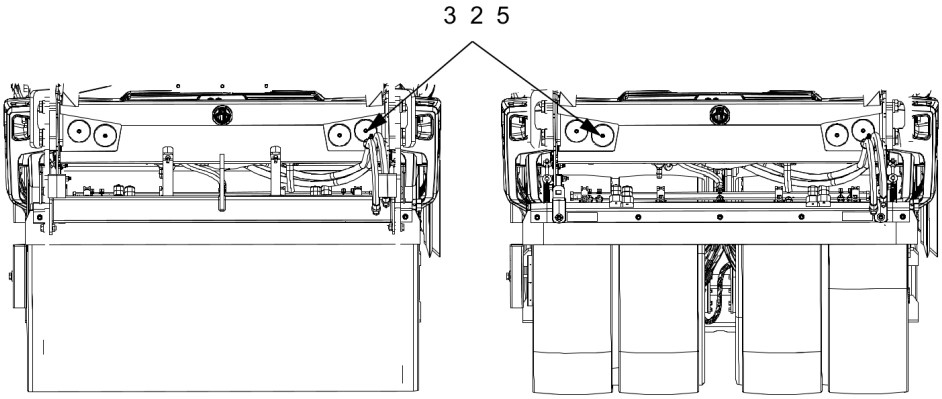

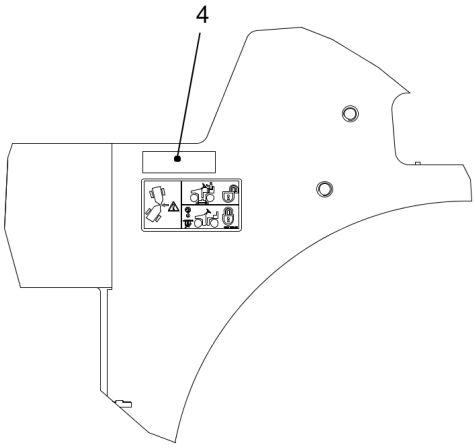

Item	Part No.	Name	Qty	L	C	SN INFO
1	4812130199	Reflector, white	2			
2	4700624020	Blind rivet	6			
3	4812130200	Reflector, red	4			

Item	Part No.	Name	Qty	L	C	SN INFO
4	4812130233	Reflector, yellow	2			
5	4700904281	Steel plain washer	6			

Decals Reflector module, Driving lights

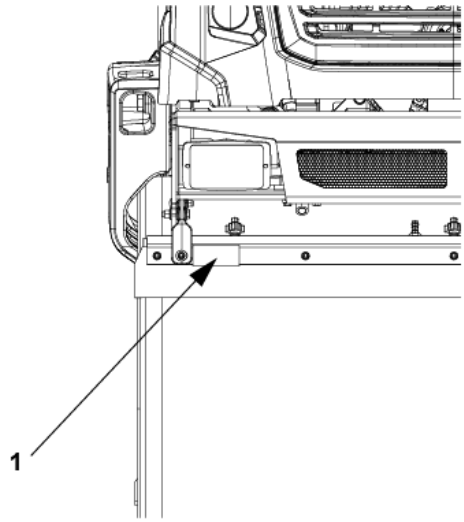

Front view

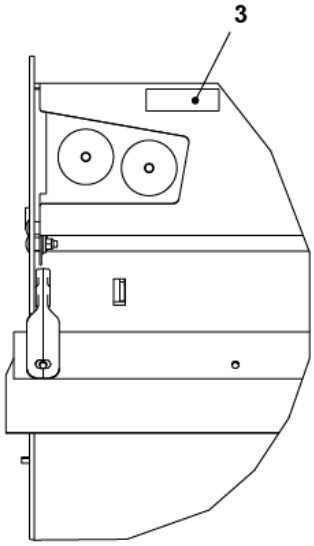

Rear view

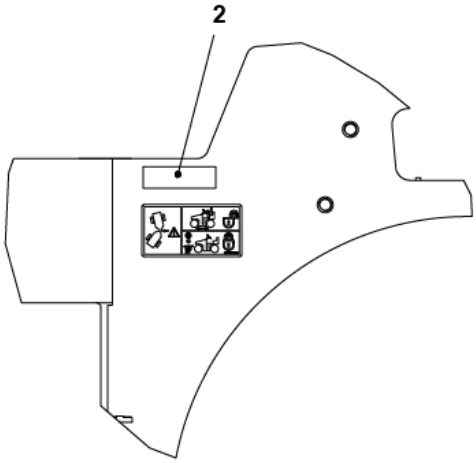

Left view

Item	Part No.	Name	Qty	L	C	SN INFO
1	4812130231	Reflector, White	2			
2	4812130233	Reflector, yellow	2			
3	4812130232	Reflector, red	2			

Optional equipment Edge cutter

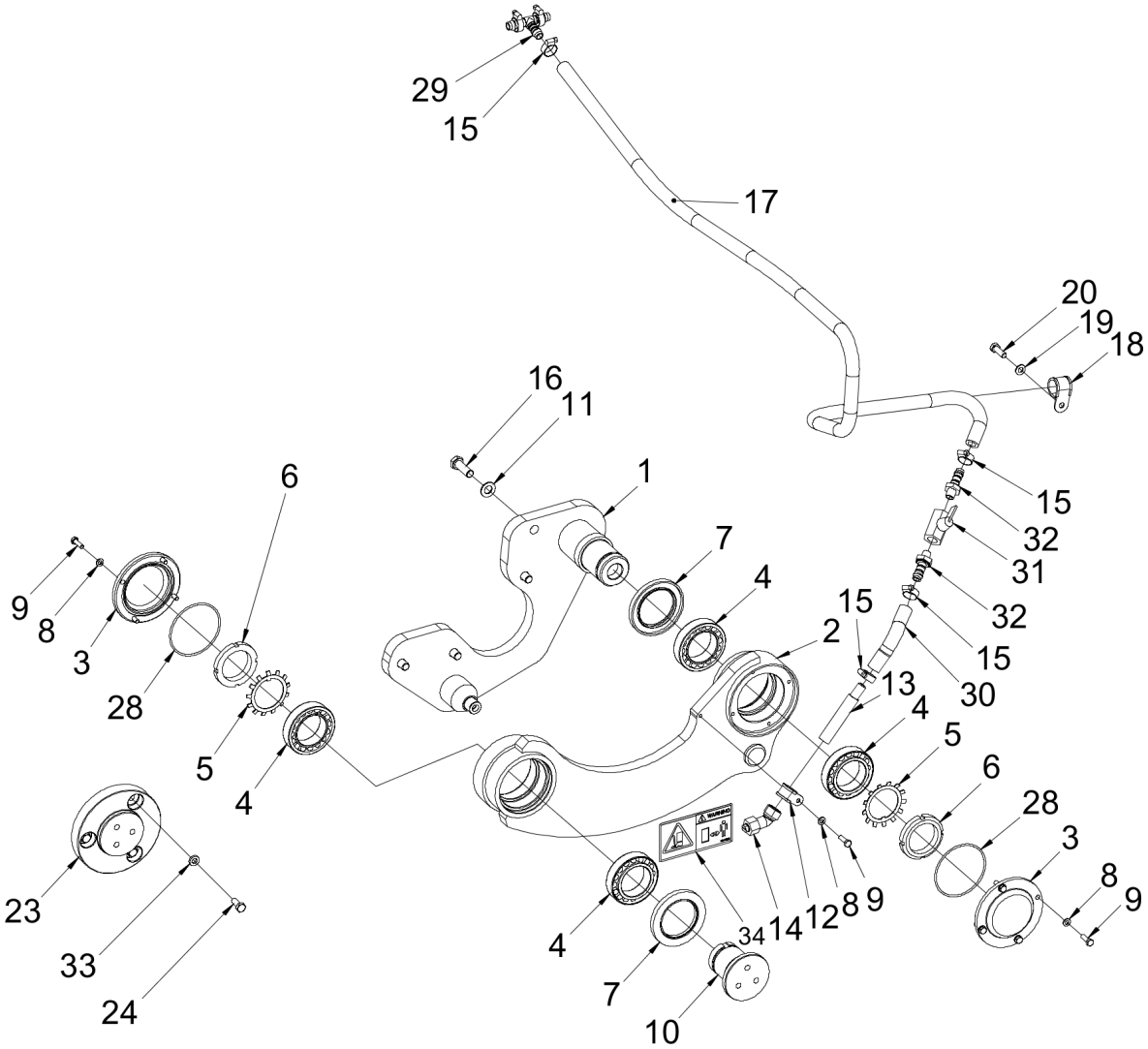

Item	Part No.	Name	Qty	L	C	SN INFO
1	4812125867	HOLDER	1			
2	4812127992	CUTTER	1			
3	4812125890	Bearing cover	2			

Item	Part No.	Name	Qty	L	C	SN INFO
4	4812125913	Taper roller bearing	4			
5	4700136009	Lock washer	2			
6	4700135009	Shaft nut	2			
7	4812125891	RADIAL LIP-TYPE SEAL	2			
8	4700904228	Steel plain washer	9			
9	4700500040	Screw, M6x20 mm 8.8 A2K	9			
10	4812125894	SHAFT	1			
11	4700904231	Steel plain washer	4			
12	4700921031	Clamp	1			
13	4700392058	Pipe	1			
14	4700392123	Nozzle body	1			
15	4700313002	Hose clamp	6			
16	4700500037	Hexagon head screw M12X035H 8.8 A3K	4			
17	4812118968	Coolant hose	1,6 M			
18	4700960727	Clamp	1			
19	4700904229	Steel plain washer 8.4X16X1.5	1			
20	4700500021	Hexagon head screw M	1			
23	4812125910	HOLDER	1			
24	4700500053	Screw, M8x20 mm 8.8 A2K	3			
28	4700160276	O-ring	2			
29	4700923735	Hose connection	1			
30	4812118968	Coolant hose	0,11 M			
31	4700925599	Ball valve	1			
32	4700924544	Hose connection	2			
33	4700904556	Steel plain washer	3			
34	4700904083	Safety decal	1			

Optional equipment Cutting disc

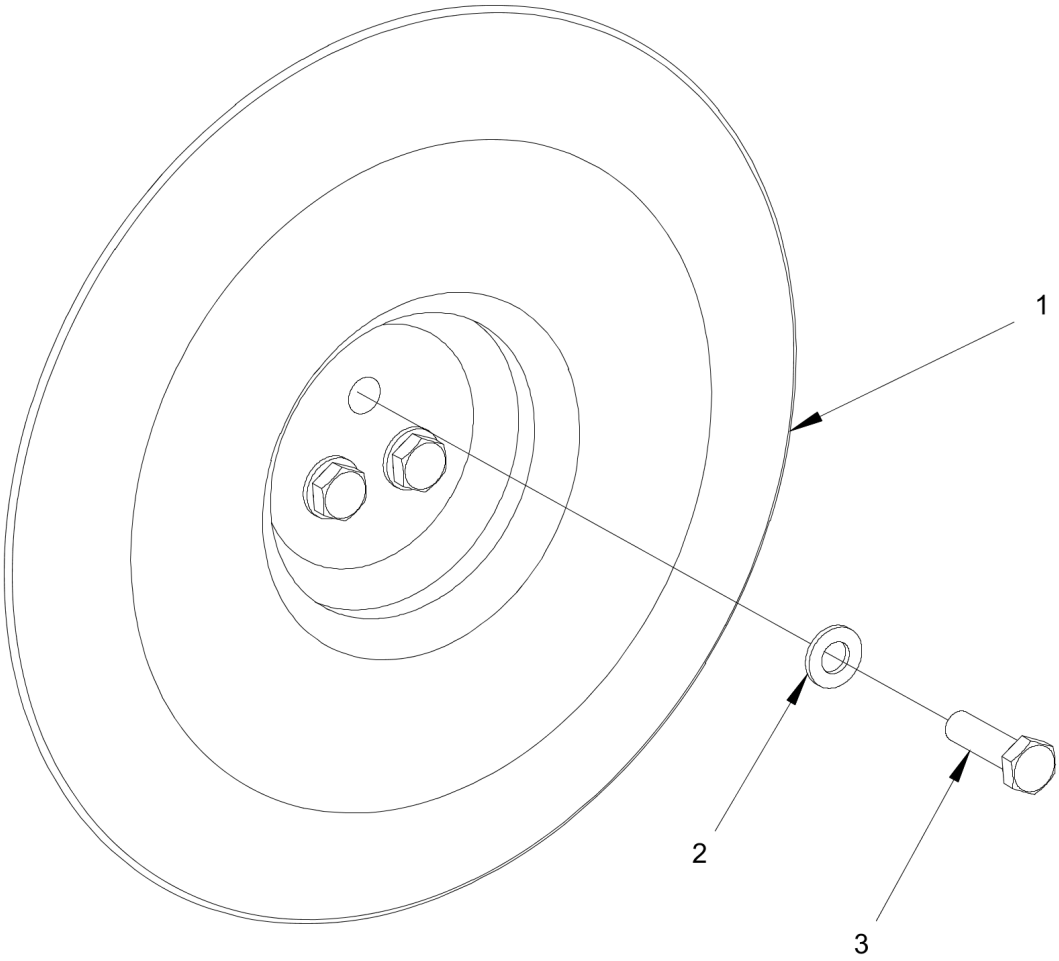

Item	Part No.	Name	Qty	L	C	SN INFO
1	4812125936	Cutting disc	1			
2	4812122654	Steel plain washer	3			
3	4700500030	Hexagon screw M	3			

Optional equipment Pressing roller

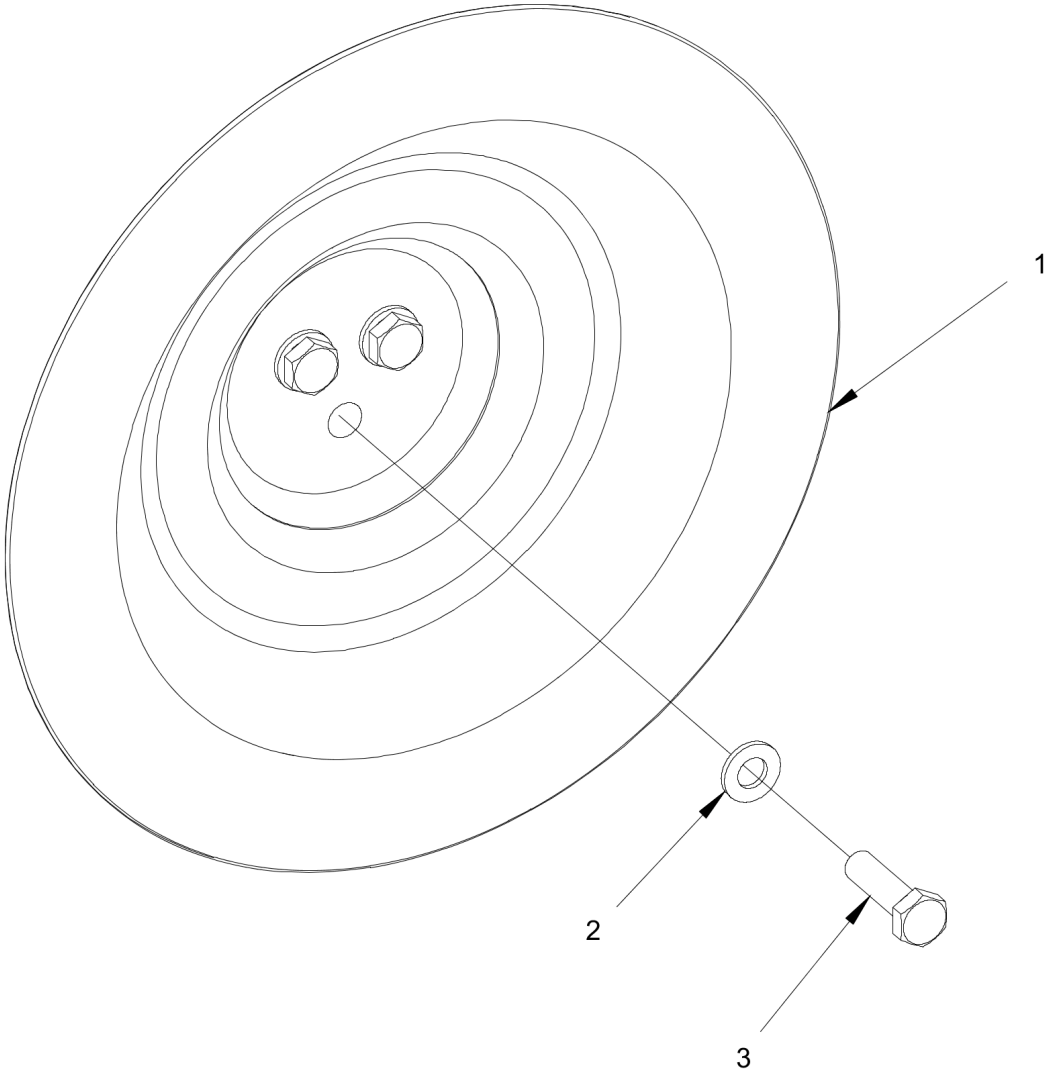

Item	Part No.	Name	Qty	L	C	SN INFO
1	4812125892	Pressing roller	1			
2	4812122654	Steel plain washer	3			
3	4700500030	Hexagon screw M	3			

Optional equipment Hydraulic cylinder

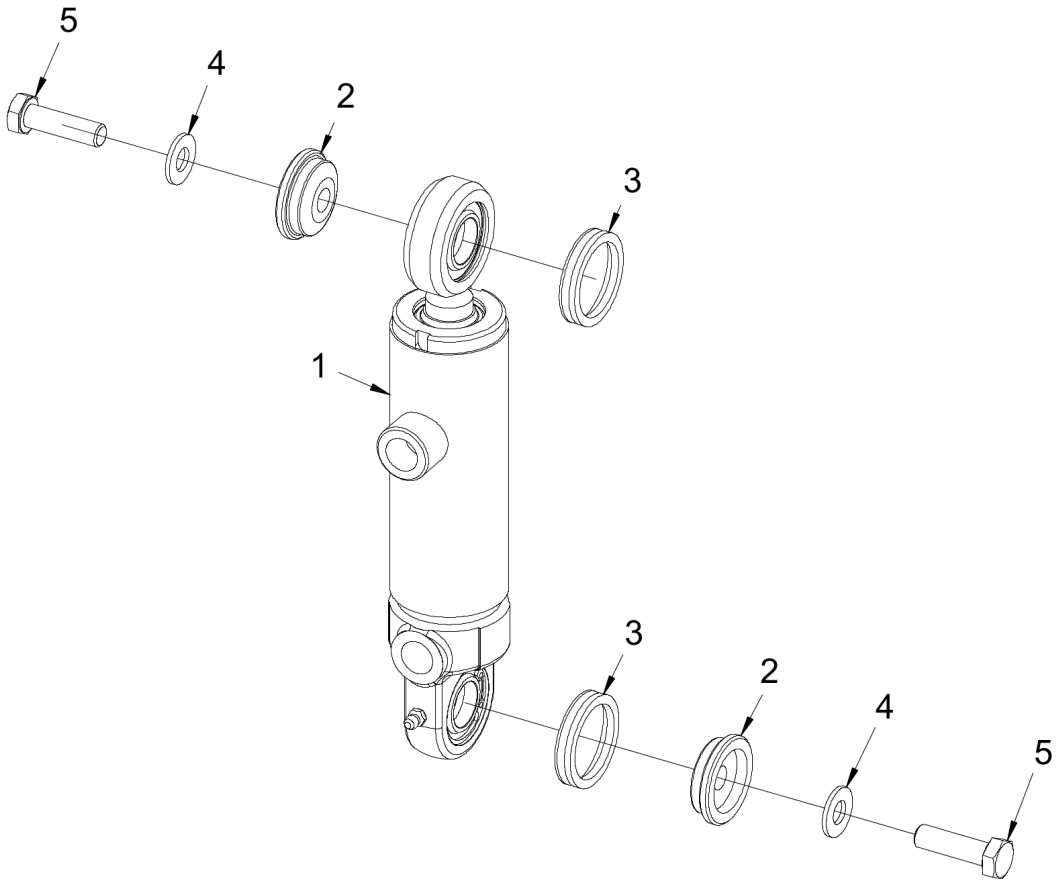

Item	Part No.	Name	Qty	L	C	SN INFO
1	4812125907	Hydraulic cylinder	1			
2	4812125937	Washer	2			
3	4700167054	Sealing	2			

Item	Part No.	Name	Qty	L	C	SN INFO
4	4700904230	Plain washer M10 10.5X22X2.0	2			
5	4700500030	Hexagon screw M	2			

Optional equipment Chip spreader

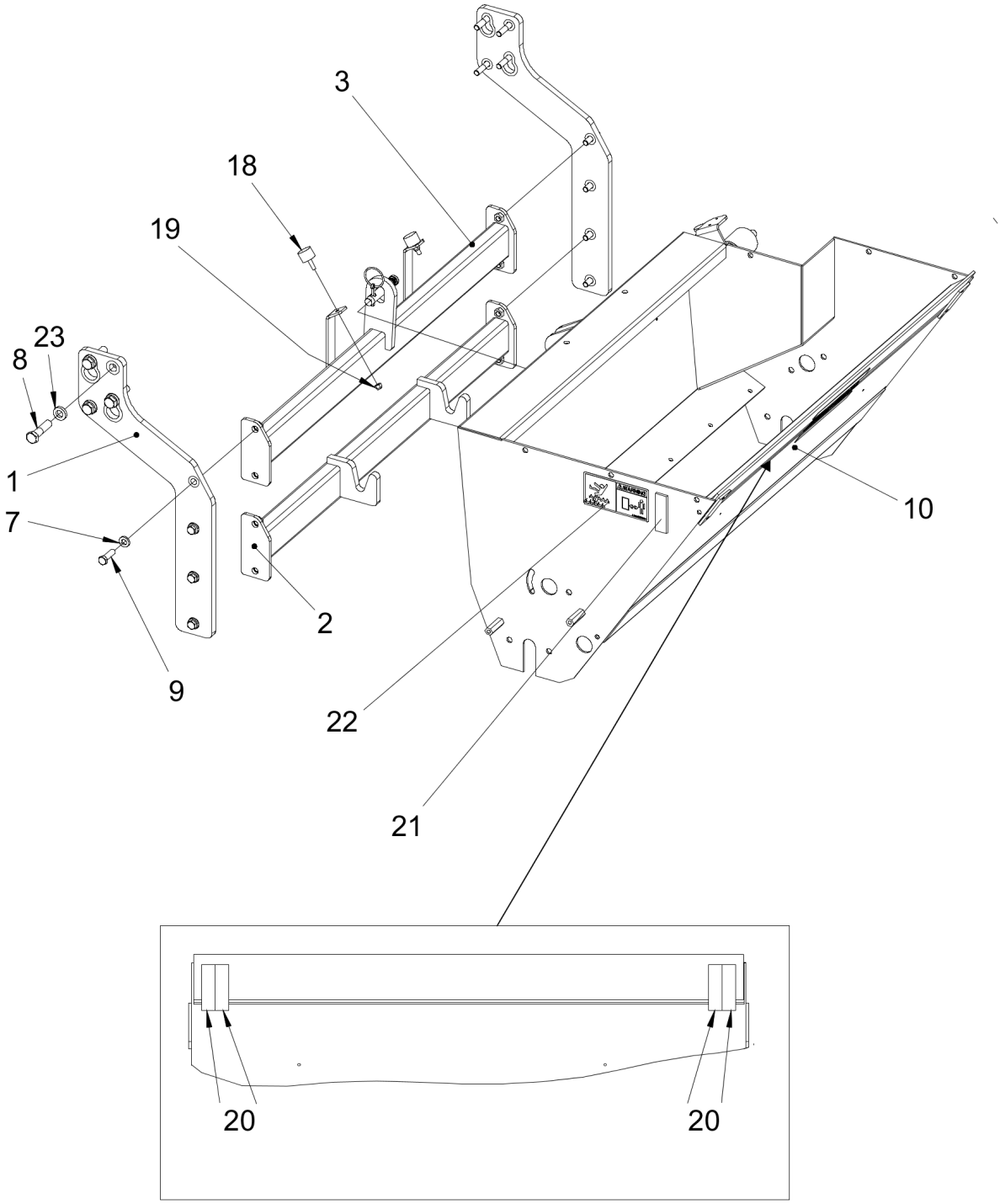

Item	Part No.	Name	Qty	L	C	SN INFO
1	4812126332	Fork	2			
2	4812126333	Bottom support	1			
3	4812126334	Top support	1			

Item	Part No.	Name	Qty	L	C	SN INFO
6	4812110663	Hexagon head screw M10x25H 10,9 A3K	4			
7	4700904703	Plain washer 13x24x4 mm	8			
8	4700500058	Screw M16-2,0x65 8,8	8			
9	4700500194	Hexagon head screw M	8			
10	4812126405	Chip spreader	1			
18	4700280101	Shock absorber	2			
19	4700586003	Lock nut M8	2			
20	4812130232	Reflector, red	4			
21	4812130233	Reflector, yellow	2			
22	4811000080	Safety decal	2			
23	4700904558	Steel plain washer 17x30x6 mm 300 HV	8			

Optional equipment Fire extinguisher

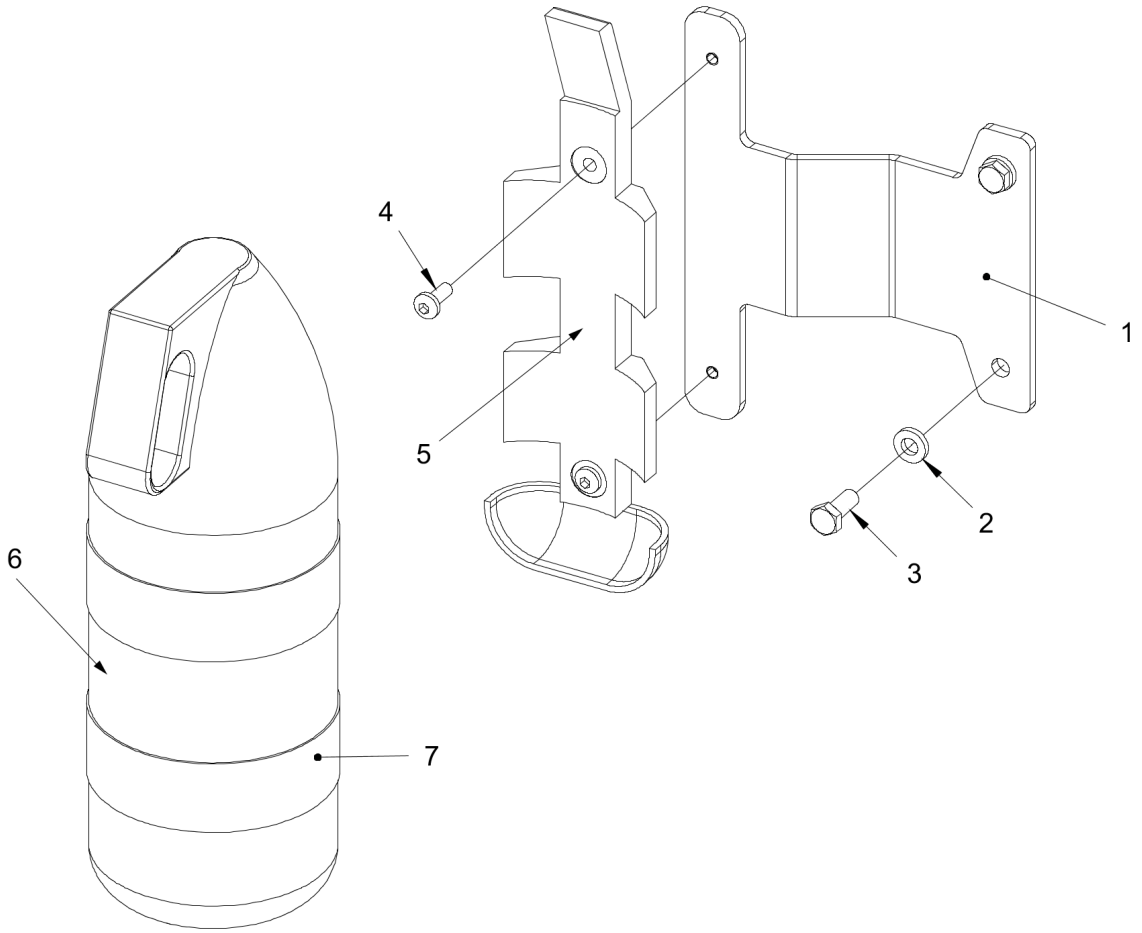

Item	Part No.	Name	Qty	L	C	SN INFO
1	4812125990	Bracket	1			
2	4700904556	Steel plain washer	2			
3	4700500053	Screw, M8x20 mm 8.8 A2K	2			

Item	Part No.	Name	Qty	L	C	SN INFO
4	4700792185	Screw M6x16	2			
5	4700378857	Holder	1			
6	-	Fire extinguisher	1			
7	4700378858	Strap	2			

Optional equipment SMV-sign

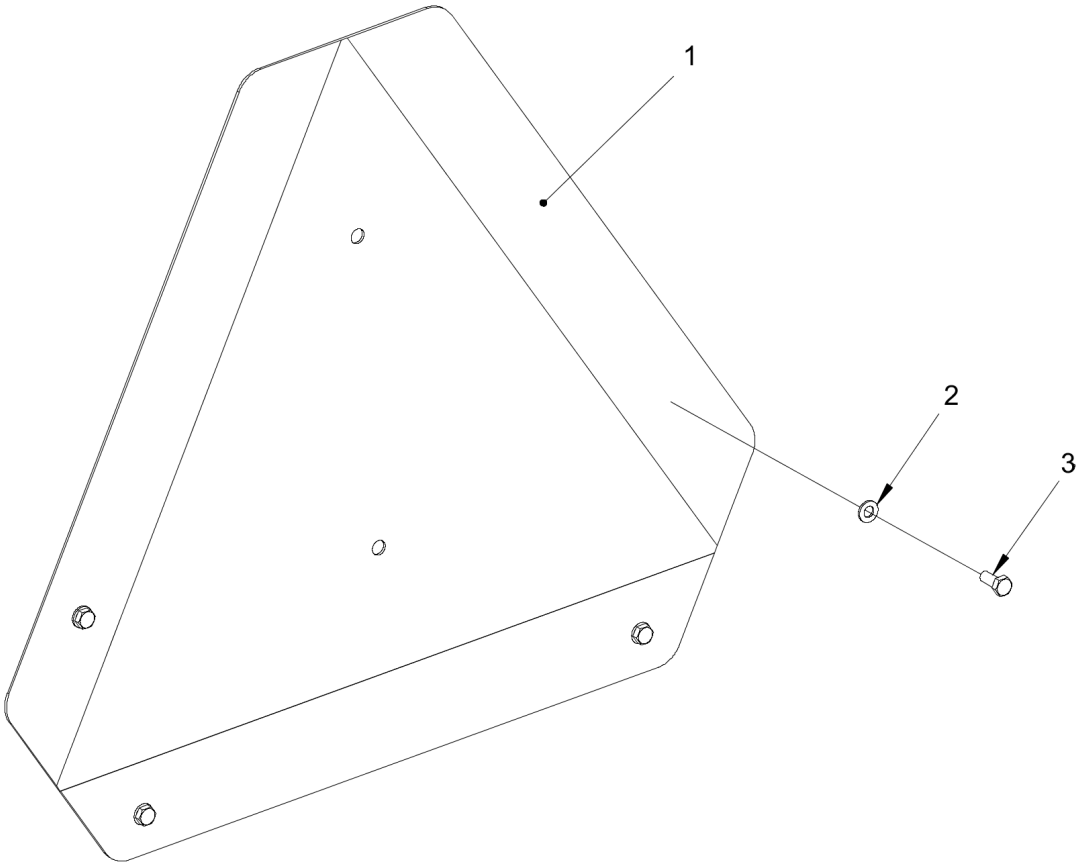

Item	Part No.	Name	Qty	L	C	SN INFO
1	4700476019	SMV-sign	1			
2	4700904281	Steel plain washer	4			
3	4700500004	Hexagon head screw M5x12	4			

Optional equipment Dyn@Link GPS module

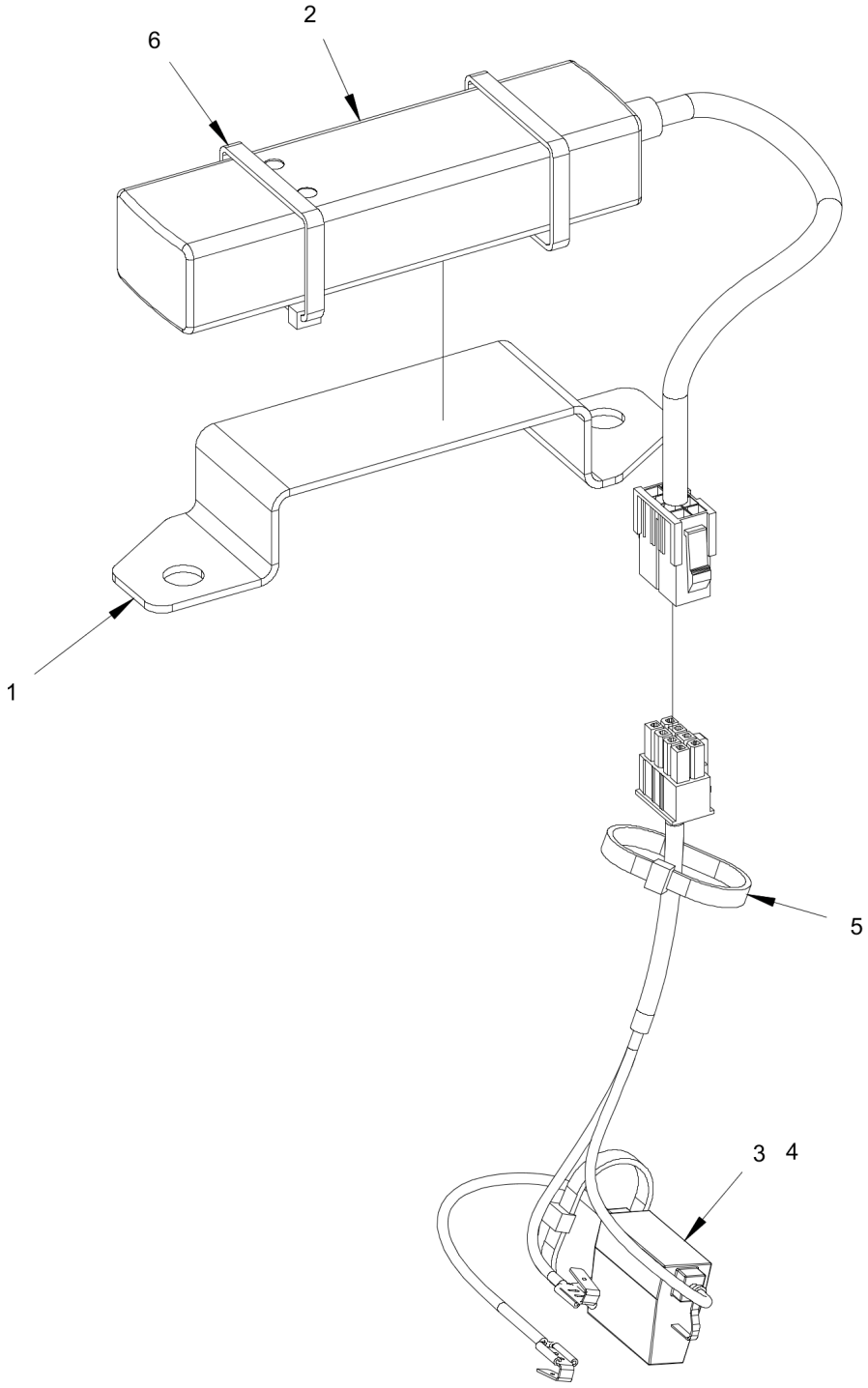

Item	Part No.	Name	Qty	L	C	SN INFO
1	4812127270	Bracket	1			
2	4812013038	GPS Unit	1			
3	4812124961	Wiring harness	1			

Item	Part No.	Name	Qty	L	C	SN INFO
4	4700901225	Fuse 5A Tan	1			
5	4700313041	Cable tie	2			
6	4700792609	Cable tie	2			

Optional equipment GPS module

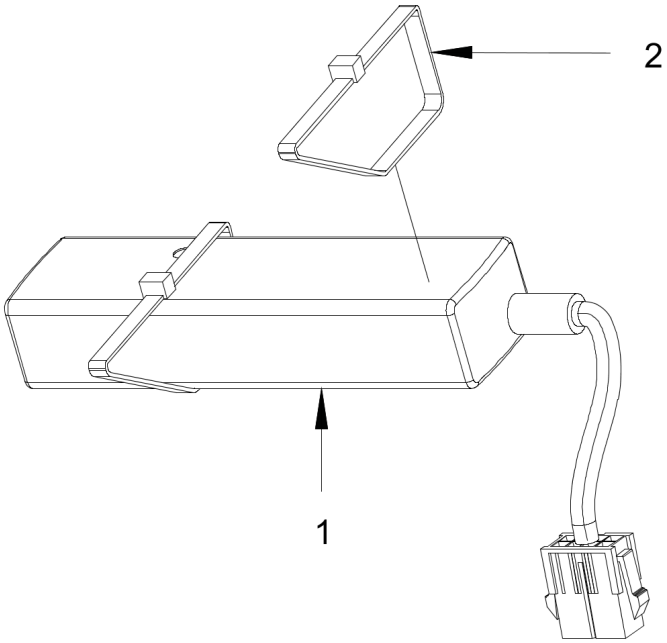

Item	Part No.	Name	Qty	L	C	SN INFO
1	4812013038	GPS Unit	1			
2	4700792609	Cable tie	2			

Optional equipment 4812013038 GPS module

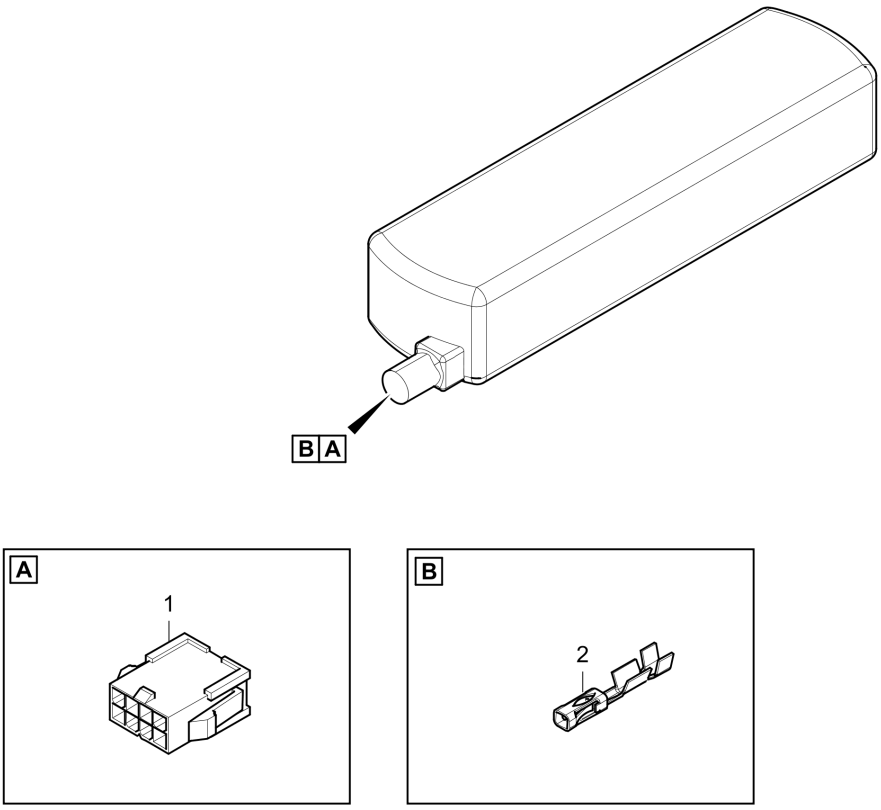

Item	Part No.	Name	Qty	L	C	SN INFO
1	4812013160	Socket shell	1			
2	4812013161	Male contact	3			

Optional equipment Bracket (GPS)

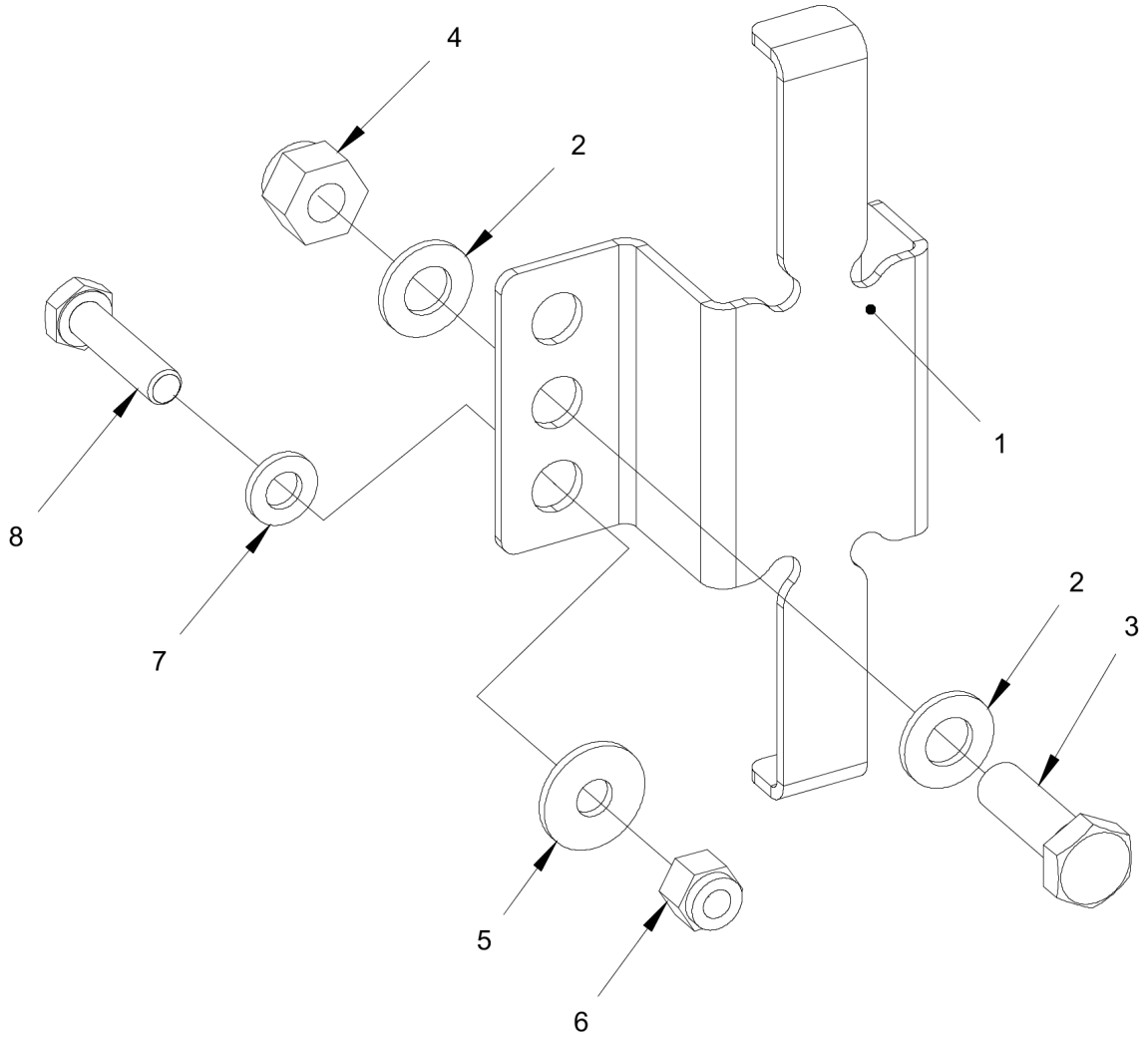

Item	Part No.	Name	Qty	L	C	SN INFO
1	4812124461	Bracket	1			
2	4700904229	Steel plain washer 8.4X16X1.5	2			
3	4700500021	Hexagon head screw M	1			

Item	Part No.	Name	Qty	L	C	SN INFO
4	4700586003	Lock nut M8	1			
5	4700928381	Washer, 6.4x18x1.6 mm	1			
6	4700586002	Lock nut M	1			
7	4700904228	Steel plain washer	1			
8	4700500075	Screw, M6-1,0x25 mm 8.8	1			

Dynapac Compaction Equipment AB
Box 504, SE 371 23 Karlskrona, Sweden

www.dynapac.com