# Parts Catalogue

DYNAPAC
FAYAT GROUP

## CC1300C VI

### Vibratory roller

CC1300C VI s/n 10000474xxA030899 -
Kubota V2403-CR (Stage V) (37 kW)

© 2021 Dynapac Compaction Equipment AB | No. 4812163399| 2021-06

Your Partner
on the Road Ahead

dynapac.com

# General information

Use only authorized parts. Any damage or malfunction caused by the use of unauthorized parts is not covered by Warranty or Product Liability.
Any unauthorized use or copying of the contents or any part thereof is prohibited. This applies in particular to trademarks, model denominations, part numbers, and drawings.

**Instructions for use**
This spare parts list contains no safety regulations and is merely intended to assist in the ordering of spare parts.
For information about operating, servicing, or repairing, the relevant Safety and operating instructions must be consulted at all costs.
Please observe the safety instructions listed in the relevant Safety and operating instructions!

## Service kits


4812161674 Service kit, 50h . . . 1
4812161675 Service kit, 50h Plus . . . 3
4812160462 Service kit, 250 / 750h . . . 5
4812161677 Service kit, 250 / 750h Plus . . . 7
4812163653 Service kit, 500h . . . 9
4812163657 Service kit, 500h Plus . . . 11
4812163655 Service kit, 1000h . . . 13
4812163659 Service kit, 1000h Plus . . . 15
Start-up kit . . . 17


## Repair kits


4812163669 Eccentric shaft kit . . . 19
4812163668 Drum rotation kit . . . 21
4812163663 Shock absorber kit, drum . . . 22
4812163699 Shock absorber kit, drum (For machines equipped with chip spreader) . . . 24
4812163666 Scraper kit . . . 26
4812163573_Scraper kit, Wheels . . . 28


## General - Keys and others


Keys . . . 30
Fuse kit . . . 32


## Frames


Forks . . . 34
Scraper . . . 36
Spring loaded scraper . . . 38
Scraper, wheels . . . 40
Front frame . . . 42
Rear frame . . . 44
Sprinkler pump . . . 46
Sprinkler pipe . . . 48
Steering hitch . . . 50
4812130117_Hydraulic cylinder . . . 52


## Drum / Wheels


Drum . . . 54
Wheel module . . . 57


## Engine room


Fan . . . 59
Air cleaner . . . 61
Air hose module . . . 63
Expansion tank . . . 65
Exhaust system . . . 67
Engine hood . . . 69
Fuel tank module . . . 72
Fuel hoses . . . 74
Battery holder . . . 76
Hydraulic oil tank . . . 78
Belt guard . . . 80
Cooler module . . . 82
Coolant hoses . . . 84
Engine module . . . 86
4812128810_Diesel engine, Kubota V2403-CR (Stage V) . . . 88
Bracket module . . . 90
Coupling . . . 92


## Hydraulic system

Cooler - Suction and return . . . 94

**Vibration system**

Vibration - fan and leak rear with access valve . . . 96
Vibration - fan and leak rear without access valve . . . 99
Vibration - fan and leak rear . . . 102
4812125795 Hydraulic motor . . . 105
4812132135 Hydraulic motor . . . 107
4812130114 Hydraulic pump . . . 109

**Propulsion system**

Propulsion - Brake system . . . 111
Propulsion and leak front . . . 113
4812125789 Hydraulic pump . . . 115
4812130112 Hydraulic motor . . . 117

**Steering system**

Steering system . . . 119
4812132194 Hydraulic cylinder . . . 121

**Edge cutter (option)**

Edge cutter - Left side . . . 123
Edge cutter - Right side . . . 125
Hydraulic cylinder module . . . 127
4812125907 Hydraulic cylinder . . . 129

**Chip spreader (option)**

Chip spreader (option) . . . 131
4812130731_Hydraulic motor . . . 133
4812130114 Hydraulic pump . . . See page 109

**Electrical equipment**

Circuit board and fuses . . . 135
Backup alarm module . . . 137
Cable harness - Dual vibration . . . 139
Cable harness - Single pole battery disconnector . . . 141
Cable harness - Main engine (CR) . . . 143
Cable harness kit, Dual Edge Cutter . . . 145
Cable harness, Asphalt temperature meter . . . 147
Cable harness - Working lights, Canopy mounted (option) . . . 149
Cable harness - Driving lights (option) . . . 151
Cable harness - Rotating beacon (option) . . . 153
Cable harness - Flow divider (option) . . . 155
Cable harness - Working lights, inclusive Rotating Beacon . . . 157
Cable harness - Sprinkler rear, Combi . . . 159
Cable harness - Edge cutter & Chip spreader (option) . . . 161
Cable harness - Seat heater . . . 163
Driving lights (option) . . . 165
Working lights (option) . . . 167
Working light LED module . . . 169
Working light module S-LED . . . 171
Direction light module . . . 173
Registration plate light . . . 175

**Drivers platform**

Sprinkler tank . . . 177
Emulsion tank module . . . 179
ROPS foldable . . . 181
Platform . . . 183
Hand rail . . . 185

Canopy . . . 187
Slideable seat . . . 189
Fixed seat . . . 191
Comfort seat with heat module . . . 193
Rear view mirror (option) . . . 195
Control module (1-button) - Right side . . . 197
4812130902 Control (1-button, single) . . . 199
Control module (2-buttons) - Right side . . . 201
4812130903 Control (2-buttons) . . . 203
Controle module (3-buttons) - Right side . . . 205
4812130904 Control (3-buttons) . . . 207
ECU module . . . 209
Cup and can holder . . . 211

## Decals

Decals . . . 213
Reflector module, Working lights . . . 216
Reflector module, Driving lights . . . 218

## Optional equipment

### Edge cutter

Edge cutter, Left side . . . 220
Edge cutter, Right side . . . 222
Cutting disc . . . 225
Pressing roller . . . 227
Chip spreader module . . . 229
Chip spreader . . . 231
Temperature sensor (option) . . . 234
Brake release (option) . . . 236
Fire extinguisher . . . 238
SMV-sign . . . 240
Dyn@Link GPS module . . . 242
4812013038 GPS module . . . 244

**Service kits** 4812161674 Service kit, 50h

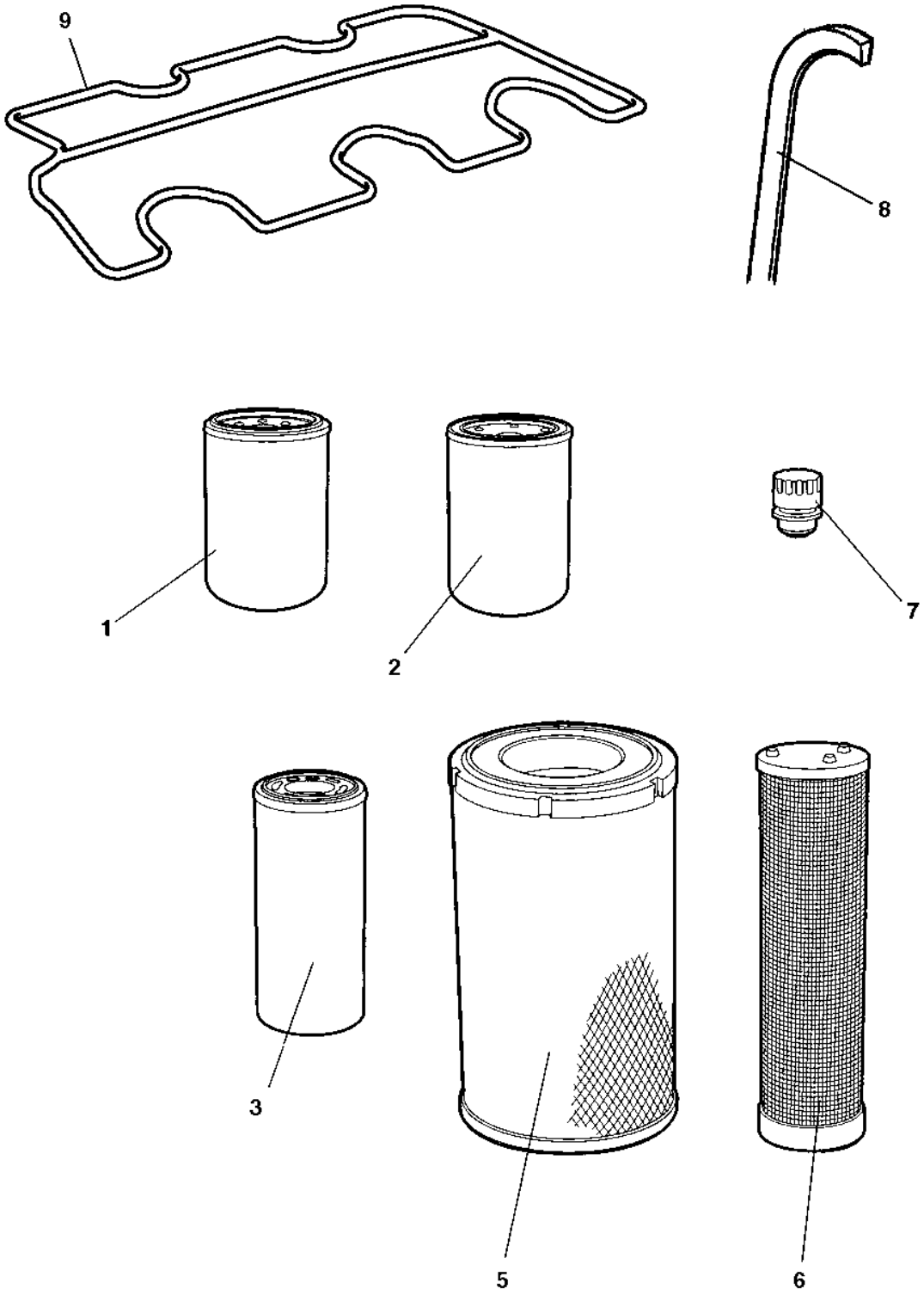

| Item | Part No. | Name | Qty | L | C | SN INFO |
|---|---|---|---|---|---|---|
| 0 | 4812161674 | Service kit, 50h | 1 | | | |
| 1 | 4812156259 | Engine oil filter element | 1 | | | |
| 2 | 4812113328 | Hydraulic oil filter element | 1 | | | |

**Service kits** 4812161675 Service kit, 50h Plus

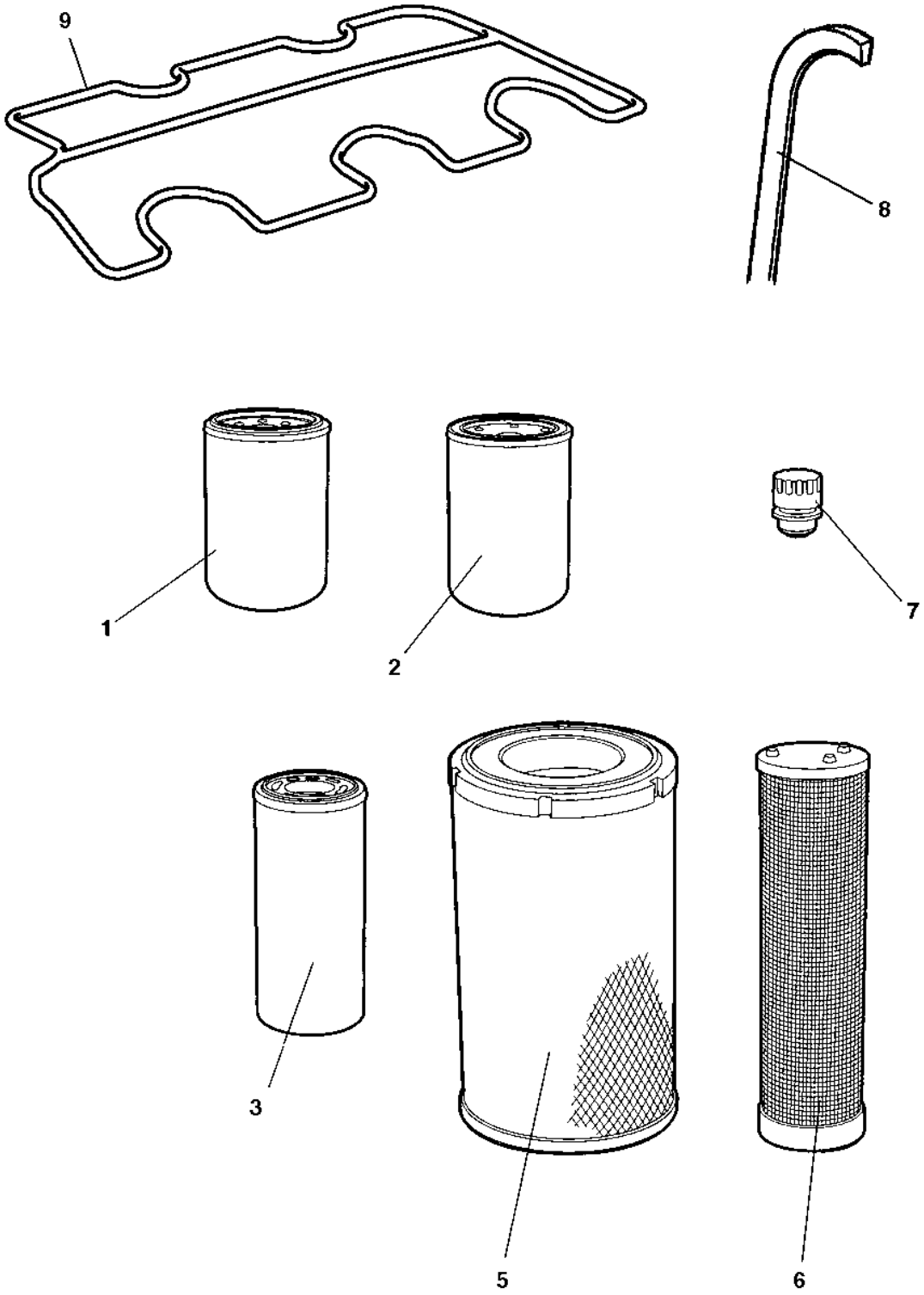

| Item | Part No. | Name | Qty | L | C | SN INFO |
|---|---|---|---|---|---|---|
| 0 | 4812161675 | Service kit, 50h Plus | 1 | | | |
| 1 | 4812156259 | Engine oil filter element | 1 | | | |
| 2 | 4812113328 | Hydraulic oil filter element | 1 | | | |
| 3 | 4812161855 | Dynapac engine oil 200 / 5 ltrs. | 2 | | | |
| 4 | 4812030096 | Dynapac Roller Grease | 1 | | | |

**Service kits** 4812160462 Service kit, 250 / 750h

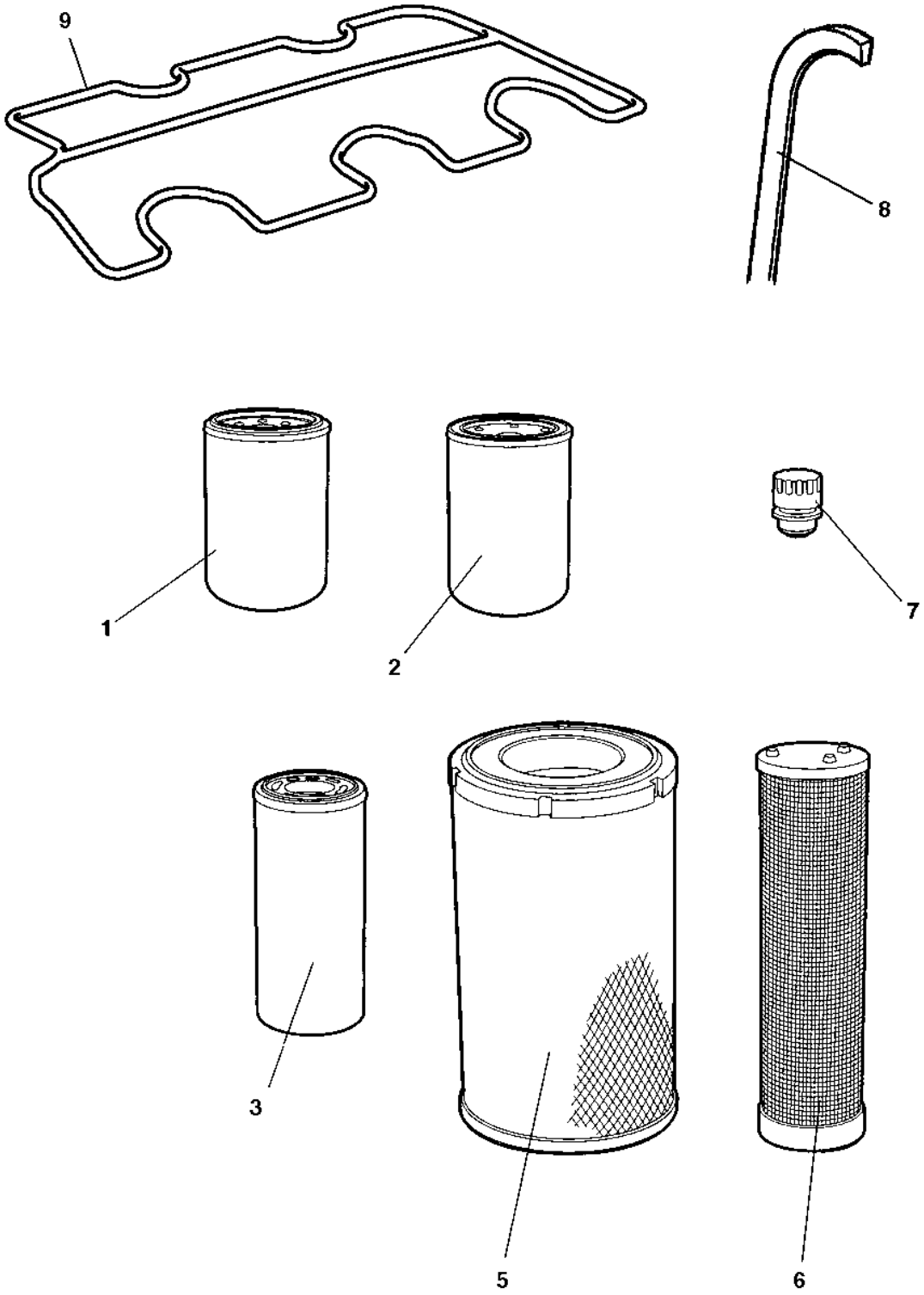

| Item | Part No. | Name | Qty | L | C | SN INFO |
|---|---|---|---|---|---|---|
| 0 | 4812160462 | Service kit, 250 / 750h | 1 | | | |
| 1 | 4812156259 | Engine oil filter element | 1 | | | |

**Service kits** 4812161677 Service kit, 250 / 750h Plus

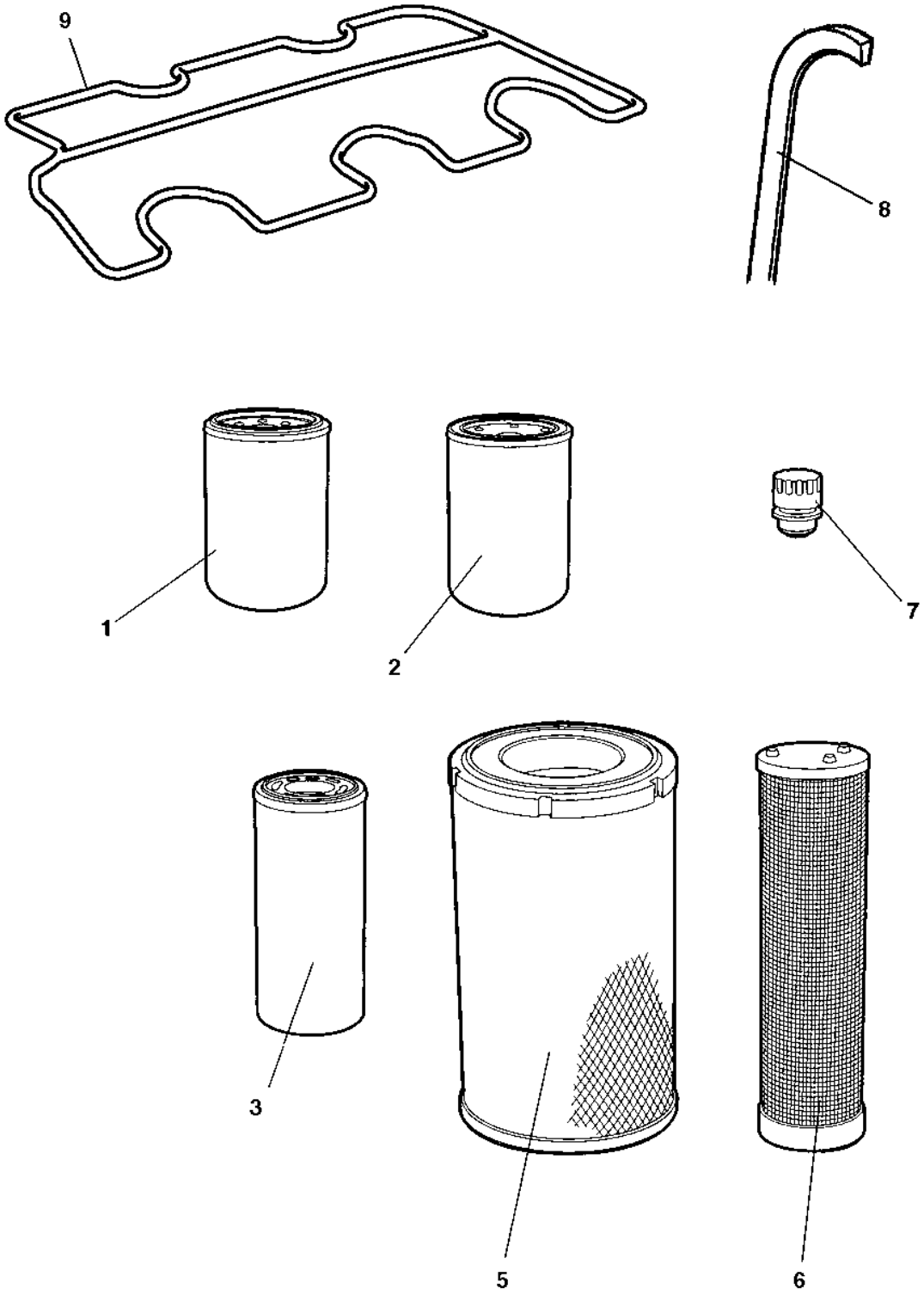

| Item | Part No. | Name | Qty | L | C | SN INFO |
|---|---|---|---|---|---|---|
| 0 | 4812161677 | Service kit, 250 / 750h Plus | 1 | | | |
| 1 | 4812156259 | Engine oil filter element | 1 | | | |
| 2 | 4812161855 | Dynapac engine oil 200 / 5 ltrs. | 2 | | | |

**Service kits** 4812163653 Service kit, 500h

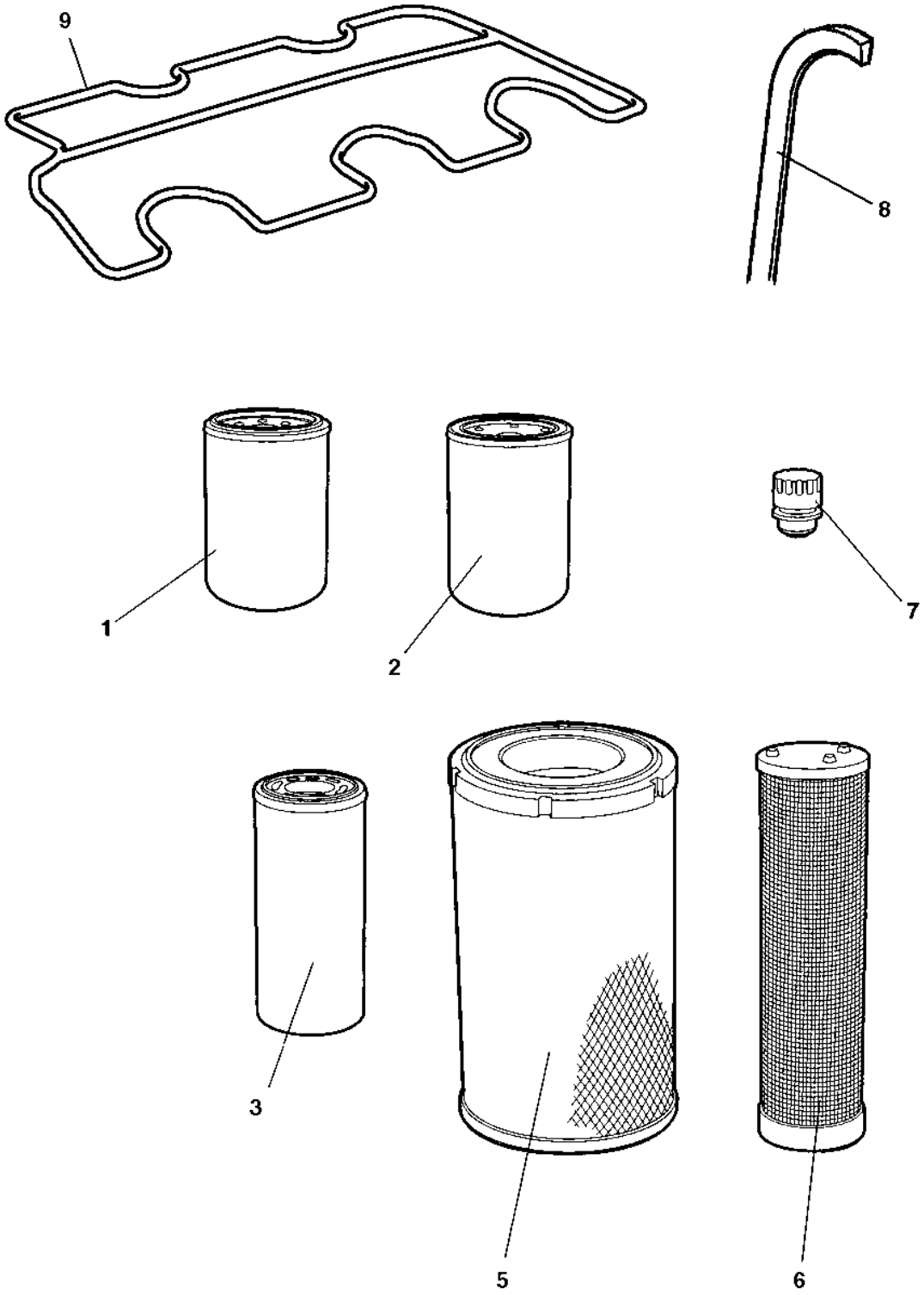

| Item | Part No. | Name | Qty | L | C | SN INFO |
|---|---|---|---|---|---|---|
| 0 | 4812163653 | Service kit, 500h | 1 | | | |
| 1 | 4812156259 | Engine oil filter element | 1 | | | |
| 2 | 4812161672 | Fuel filter element | 1 | | | |
| 3 | 4812159594 | Pre Fuel filter element | 1 | | | |
| 4 | 4812163569 | V-belt | 1 | | | |
| 5 | 4812161586 | Air filter, main | 1 | | | |

**Service kits** 4812163657 Service kit, 500h Plus

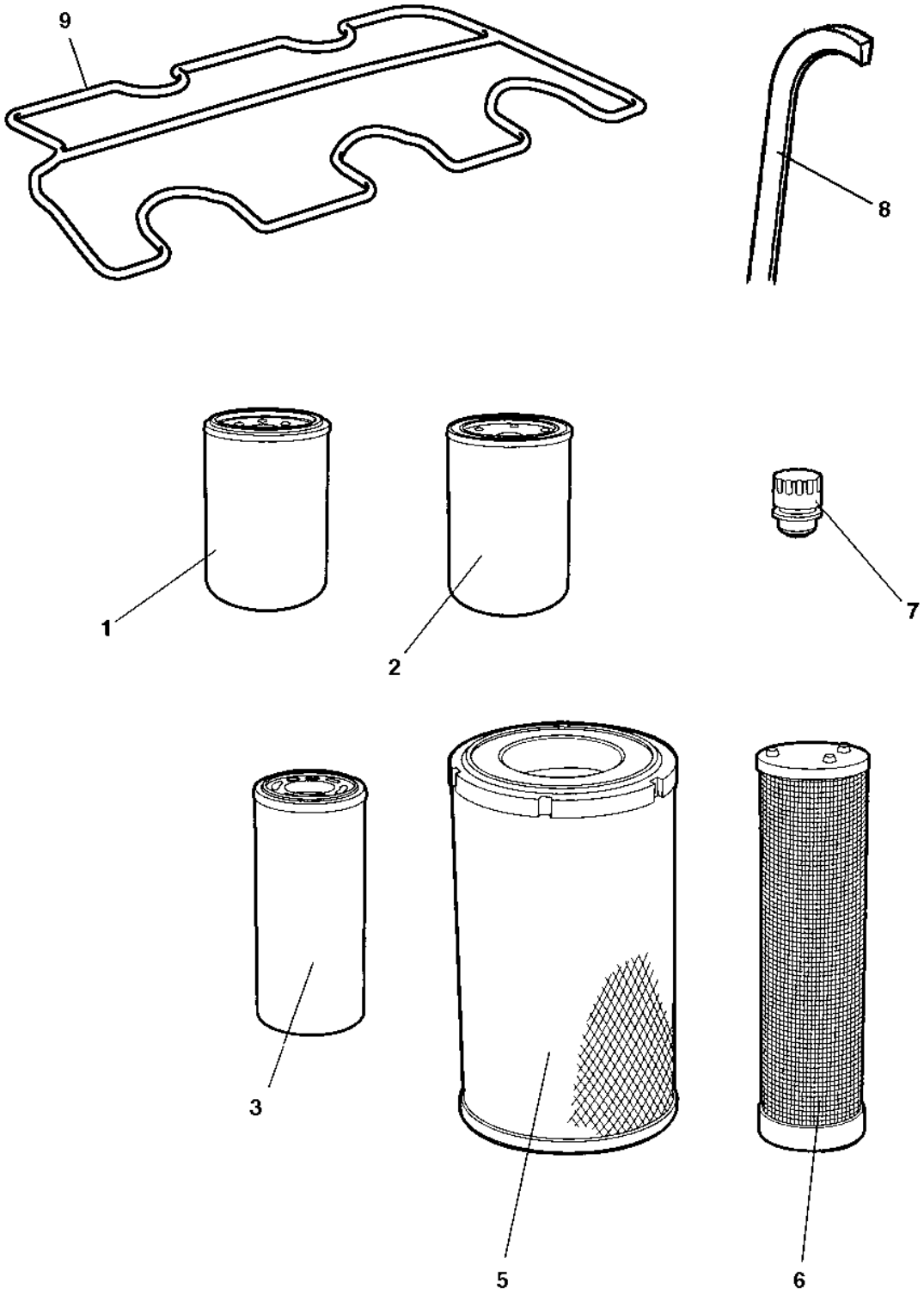

| Item | Part No. | Name | Qty | L | C | SN INFO |
|---|---|---|---|---|---|---|
| 0 | 4812163657 | Service kit, 500h Plus | 1 | | | |
| 1 | 4812156259 | Engine oil filter element | 1 | | | |
| 2 | 4812161672 | Fuel filter element | 1 | | | |
| 3 | 4812159594 | Pre Fuel filter element | 1 | | | |
| 4 | 4812163569 | V-belt | 1 | | | |
| 5 | 4812161586 | Air filter, main | 1 | | | |
| 6 | 4812030096 | Dynapac Roller Grease | 1 | | | |

**Service kits** 4812163655 Service kit, 1000h

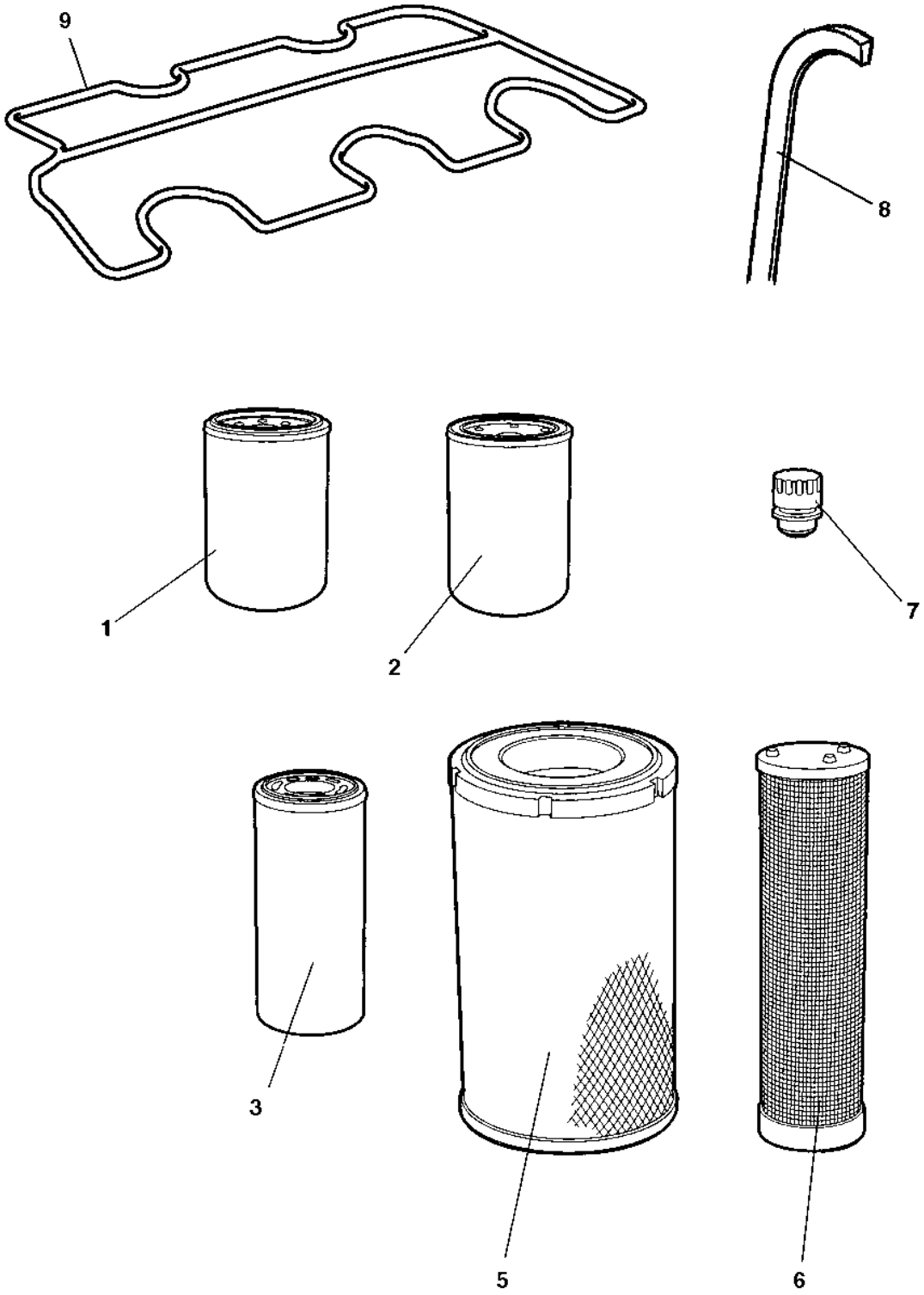

| Item | Part No. | Name | Qty | L | C | SN INFO |
|---|---|---|---|---|---|---|
| 0 | 4812163655 | Service kit, 1000h | 1 | | | |
| 1 | 4812156259 | Engine oil filter element | 1 | | | |
| 2 | 4812161672 | Fuel filter element | 1 | | | |
| 3 | 4812159594 | Pre Fuel filter element | 1 | | | |
| 4 | 4812113328 | Hydraulic oil filter element | 1 | | | |
| 5 | 4812161586 | Air filter, main | 1 | | | |
| 6 | 4812161587 | Air filter element, Safety | 1 | | | |
| 7 | 4700357138 | Ventilating filter | 1 | | | |
| 8 | 4812163569 | V-belt | 1 | | | |
| 9 | 4812156262 | Valve cover gasket | 1 | | | |

**Service kits** 4812163659 Service kit, 1000h Plus

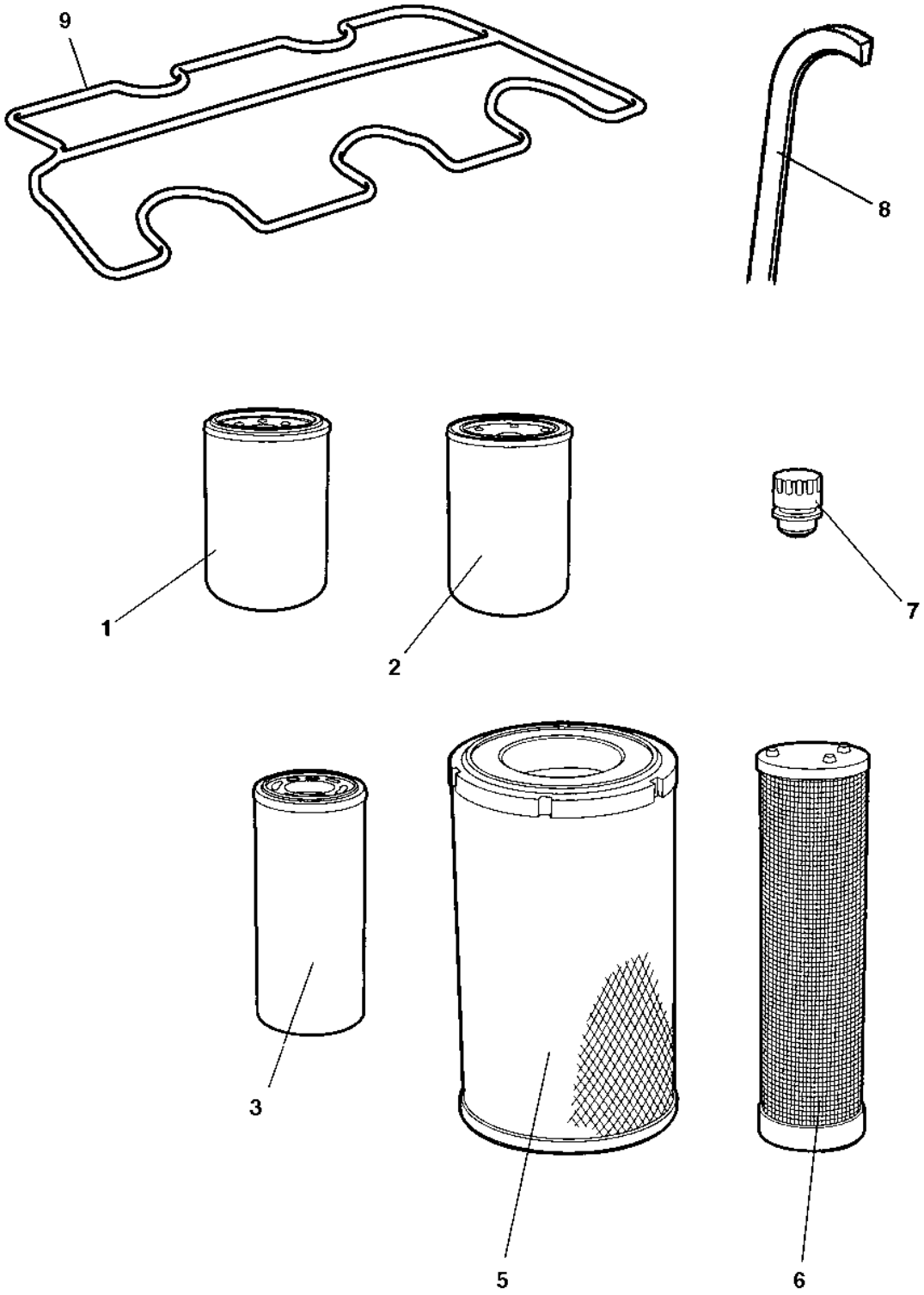

| Item | Part No. | Name | Qty | L | C | SN INFO |
|---|---|---|---|---|---|---|
| 0 | 4812163659 | Service kit, 1000h Plus | 1 | | | |
| 1 | 4812156259 | Engine oil filter element | 1 | | | |
| 2 | 4812161672 | Fuel filter element | 1 | | | |
| 3 | 4812159594 | Pre Fuel filter element | 1 | | | |
| 4 | 4812113328 | Hydraulic oil filter element | 1 | | | |
| 5 | 4812161586 | Air filter, main | 1 | | | |
| 6 | 4812161587 | Air filter element, Safety | 1 | | | |
| 7 | 4700357138 | Ventilating filter | 1 | | | |
| 8 | 4812163569 | V-belt | 1 | | | |
| 9 | 4812156262 | Valve cover gasket | 1 | | | |
| 10 | 4812161855 | Dynapac engine oil 200 / 5 ltrs. | 2 | | | |
| 11 | 4812161868 | Dynapac hydraulic 300 / 20 ltrs. | 2 | | | |
| 12 | 4812161883 | Dynapac Gear oil 300 / 5 ltrs. | 2 | | | |

**Service kits** Start-up kit

Image does not exist

| Item | Part No. | Name | Qty | L | C | SN INFO |
|---|---|---|---|---|---|---|
| 0 | 4812163661 | Start-up kit | 1 | | | |
| 1 | 4812161675 | Service kit, 50h Plus | 1 | | | |
| 2 | 4812161677 | Service kit, 250 / 750h Plus | 1 | | | |
| 3 | 4812163657 | Service kit, 500h Plus | 1 | | | |
| 4 | 4812163659 | Service kit, 1000h Plus | 1 | | | |

**Repair kits** 4812163669 Eccentric shaft kit

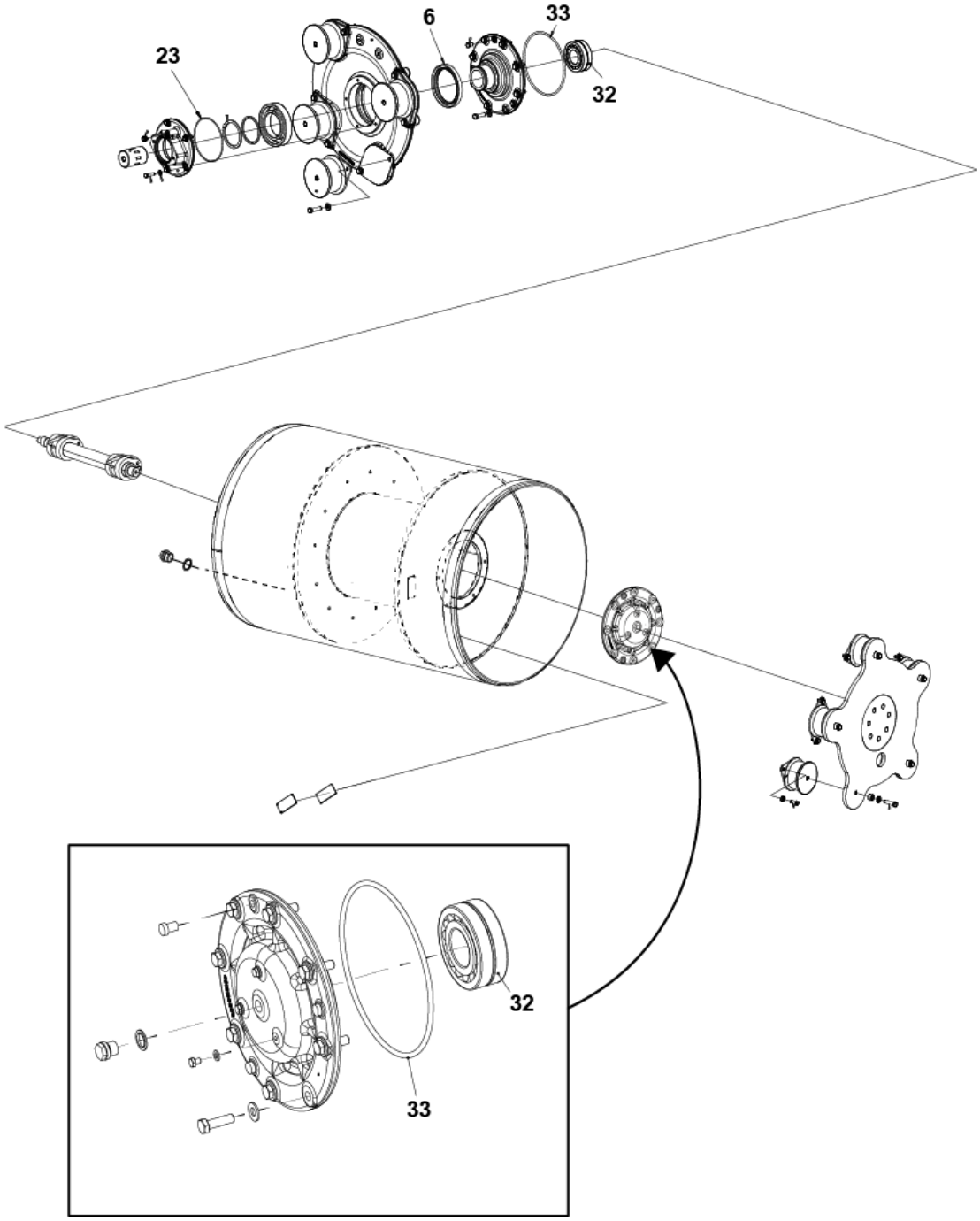

| Item | Part No. | Name | Qty | L | C | SN INFO |
|---|---|---|---|---|---|---|
| 0 | 4812163669 | Eccentric shaft kit | | | | |
| 6 | 4700163049 | Radial lip-type seal | 1 | | | |
| 23 | 4700160214 | O-ring | 1 | | | |
| 32 | 4812130497 | Spherical roller bearing | 2 | | | |
| 33 | 4700923951 | O-ring | 2 | | | |

**Repair kits** 4812163668 Drum rotation kit

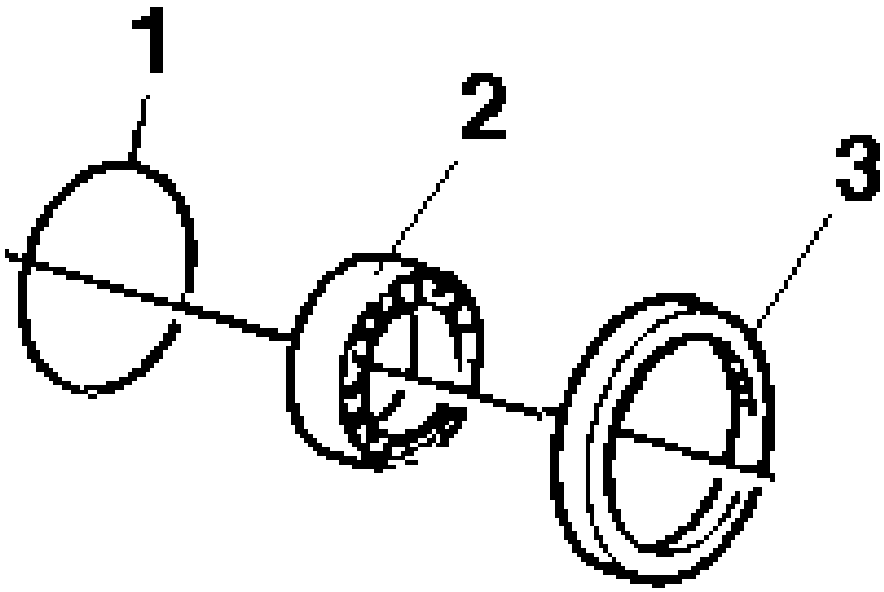


| Item | Part No. | Name | Qty | L | C | SN INFO |
|---|---|---|---|---|---|---|
| 0 | 4812163668 | Drum rotation kit | | | | |
| 1 | 4700160214 | O-ring | 1 | | | |
| 2 | 4812130497 | Spherical roller bearing | 1 | | | |
| 3 | 4700163049 | Radial lip-type seal | 1 | | | |

**Repair kits** 4812163663 Shock absorber kit, drum

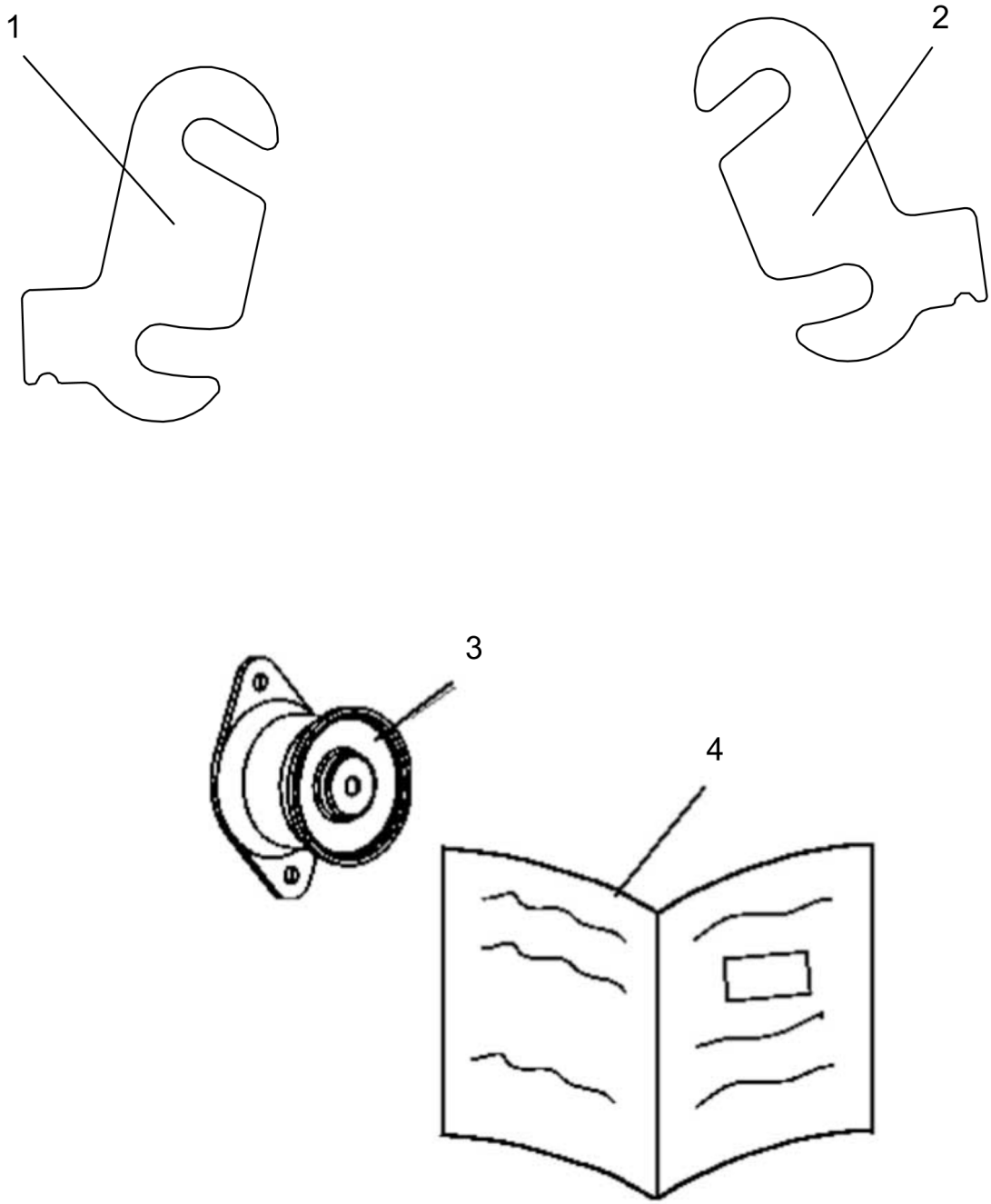

| Item | Part No. | Name | Qty | L | C | SN INFO |
|---|---|---|---|---|---|---|
| 0 | 4812163663 | Start-up kit | | | | |
| 1 | 4812130756 | Shim | 2 | | | |
| 2 | 4812130757 | Shim | 2 | | | |
| 3 | 4812129968 | Shock absorber | 9 | | | |
| 4 | 4812156170 | Instructions | 1 | | | |

**Repair kits** 4812163699 Shock absorber kit, drum (For machines equipped with chip spreader)

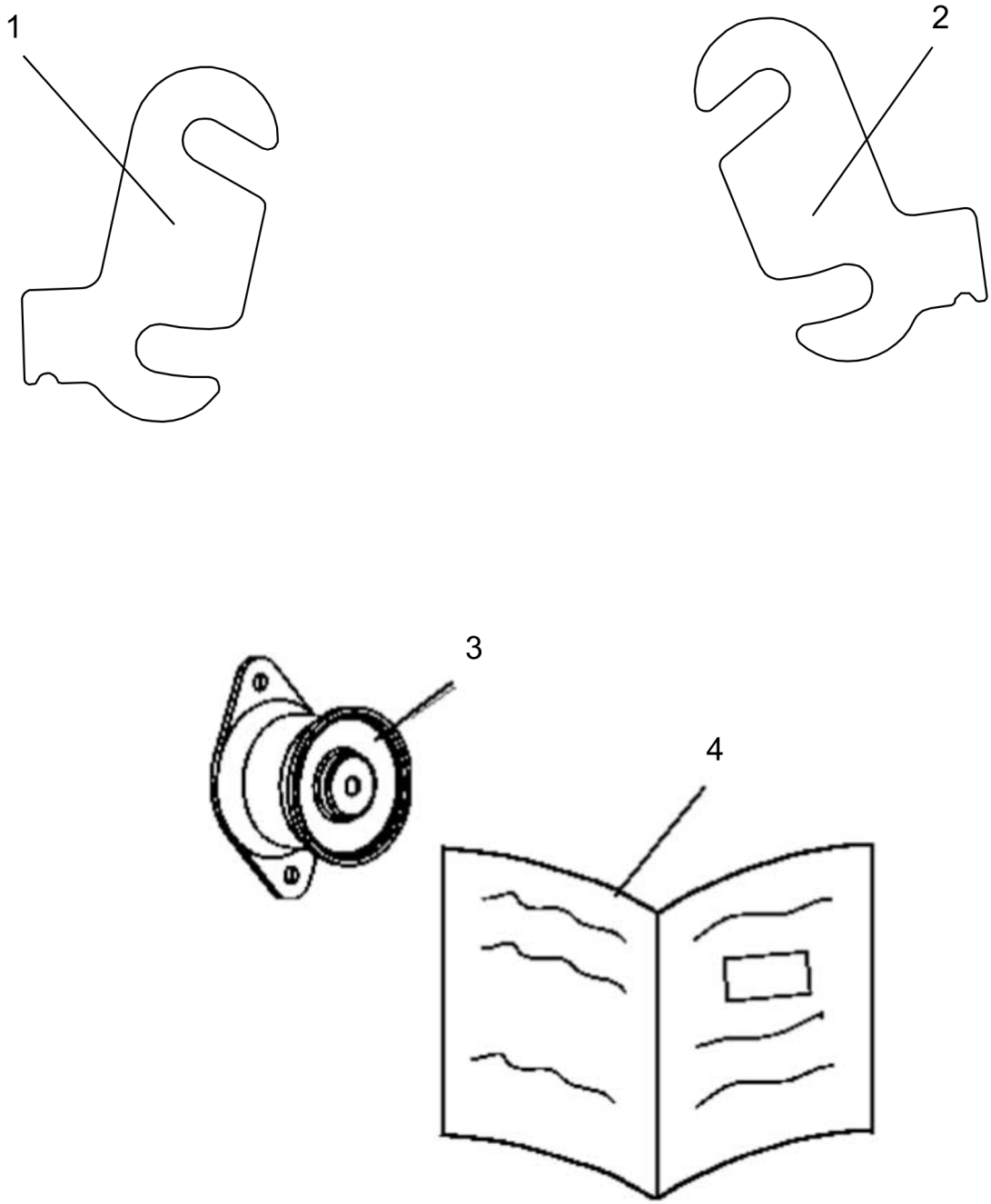

| Item | Part No. | Name | Qty | L | C | SN INFO |
|---|---|---|---|---|---|---|
| 0 | 4812163699 | Start-up kit | | | | |
| 1 | 4812130756 | Shim | 2 | | | |
| 2 | 4812130757 | Shim | 2 | | | |
| 3 | 4812129969 | Shock absorber | 9 | | | |
| Comments for Part Num. 4812129969<br><br>(L)OCAL REMARKS<br><br>A \| For machines equipped with chip spreader. | | | | | | |
| 4 | 4812156170 | Instructions | 1 | | | |

**Repair kits** 4812163666 Scraper kit

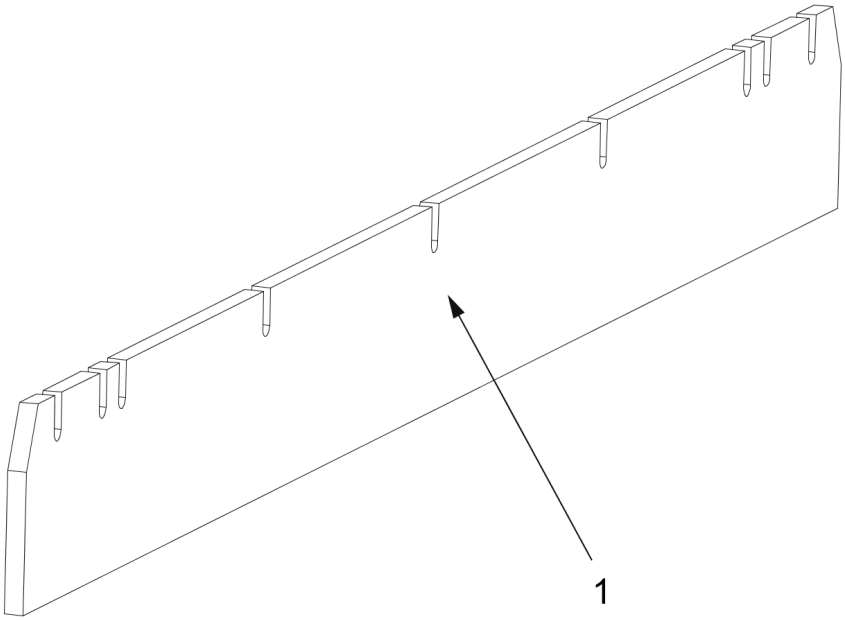

| Item | Part No. | Name | Qty | L | C | SN INFO |
|---|---|---|---|---|---|---|
| 0 | 4812163666 | Scraper kit | 1 | | | |
| 1 | 4812129285 | Scraper blade | 2 | | | |

**Repair kits** 4812163573_Scraper kit, Wheels

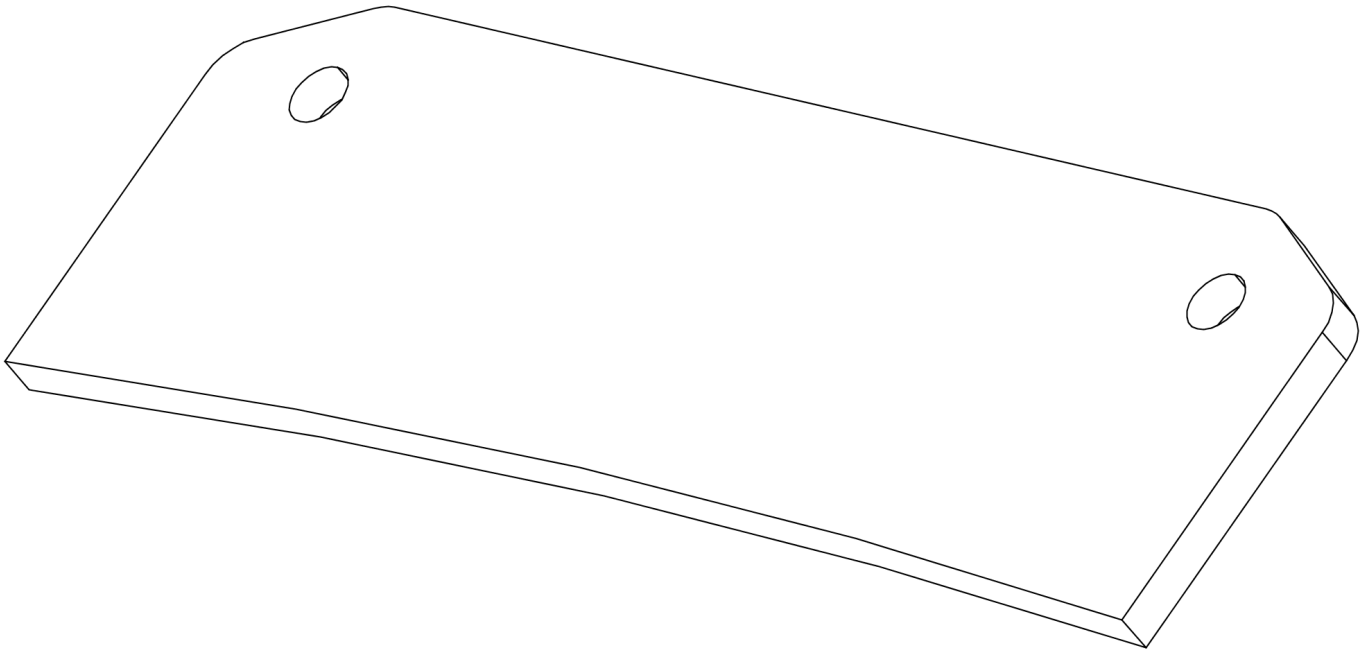

| Item | Part No. | Name | Qty | L | C | SN INFO |
|---|---|---|---|---|---|---|
| 0 | 4812163573 | Scraper kit, wheels | | | | |
| 1 | 4812130352 | Scraper blade | 4 | | | |

**General - Keys and others** Keys

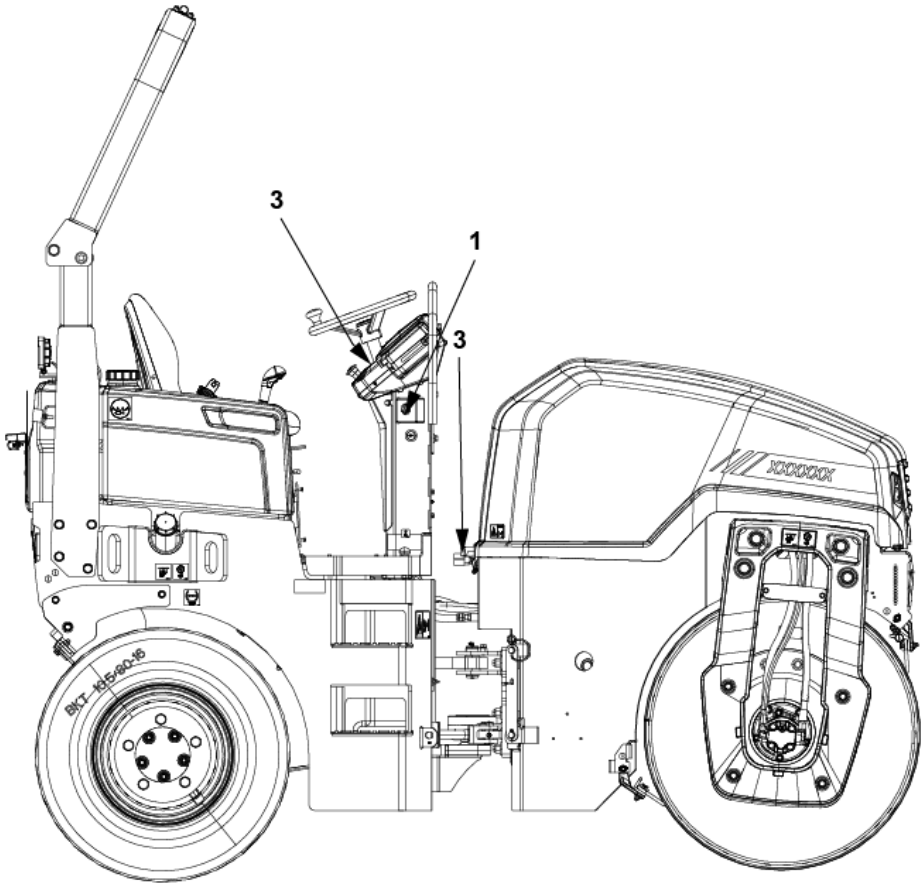

| Item | Part No. | Name | Qty | L | C | SN INFO |
|---|---|---|---|---|---|---|
| 1 | 4811000333 | Ignition switch | | | | |
| 1 | 4700902866 | Key "455" | | | | |
| 3 | 4700358881 | LOCK | | | | |
| 3 | 4812161396 | Key | | | | |

**General - Keys and others** Fuse kit

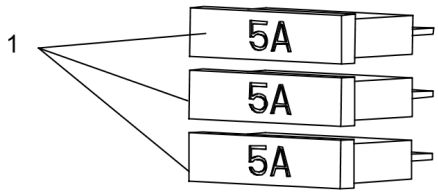

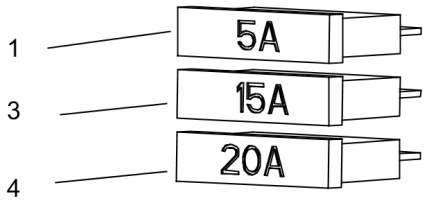

| Item | Part No. | Name | Qty | L | C | SN INFO |
|---|---|---|---|---|---|---|
| 1 | 4700901225 | Fuse 5A Tan | 4 | | | |
| 2 | 4700901227 | Fuse 10A Red | 1 | | | |
| 3 | 4700901228 | Fuse 15A Blue | 1 | | | |
| 4 | 4700903741 | Fuse 20A Yellow | 1 | | | |

**Frames** Forks

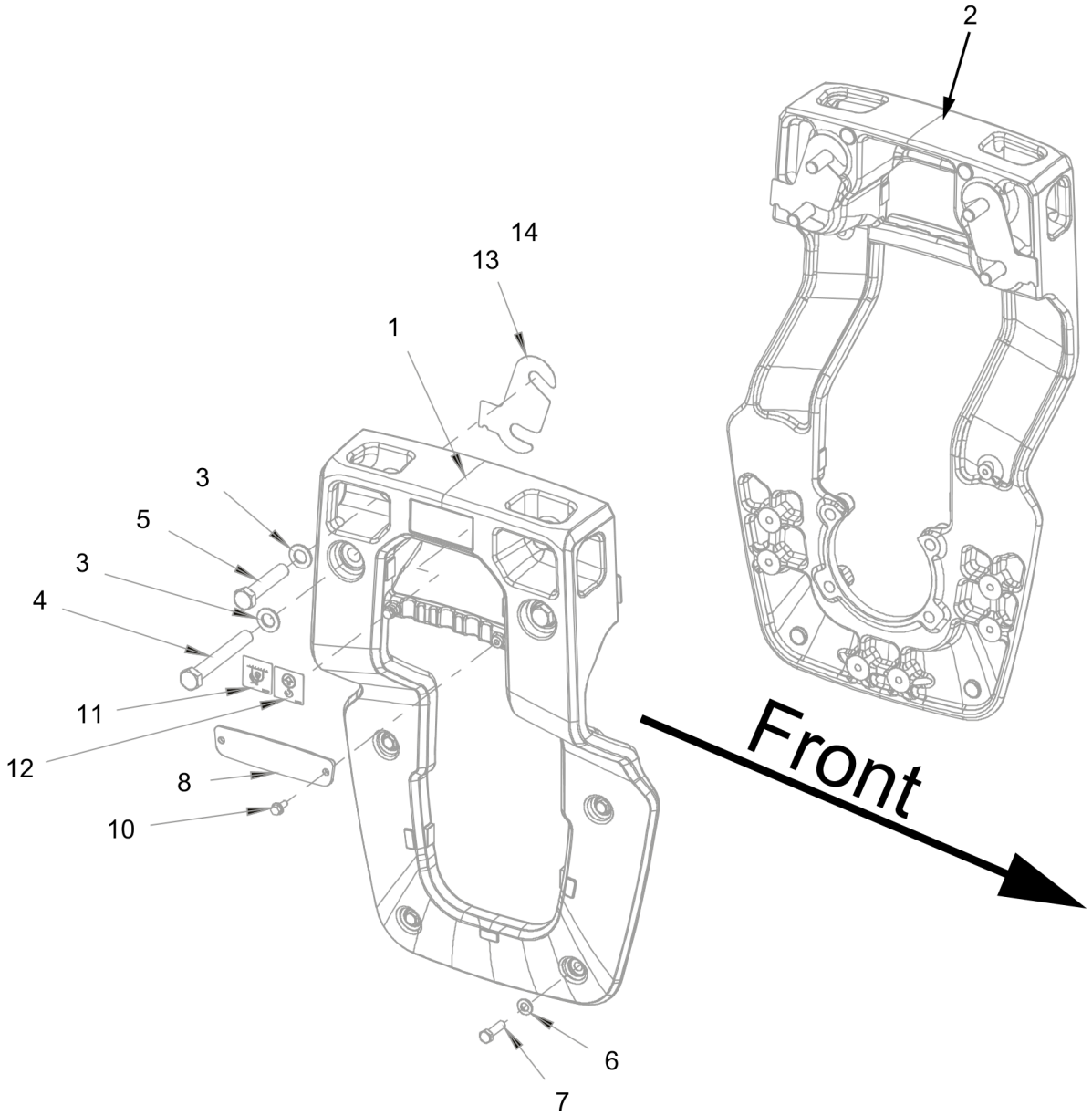


-

| Item | Part No. | Name | Qty | L | C | SN INFO |
|---|---|---|---|---|---|---|
| 1 | 4812130203 | Fork | 1 | | | |
| 2 | 4812130205 | Fork | 1 | | | |
| 3 | 4700904233 | Steel plain washer | 8 | | | |
| 4 | 4700903633 | Screw M20x150 10,9 | 4 | | | |
| 5 | 4700927117 | Hex head screw | 4 | | | |
| 6 | 4700904231 | Steel plain washer | 4 | | | |
| 7 | 4812125739 | Hexagon Head Screw, M12x40H, 10.9, Geomet | 4 | | | |
| 8 | 4812125471 | Cover plate | 2 | | | |
| 10 | 4700500505 | Hexagon screw M8X20 8.8 A2K | 4 | | | |
| 11 | 4700382751 | Decal "SECURING POINT/TIE DOWN" | 2 | | | |
| 12 | 4700357587 | Label lifting point | 2 | | | |
| 13 | 4812130756 | Shim | N | | | |
| 14 | 4812130757 | Shim | N | | | |

**Frames** Scraper

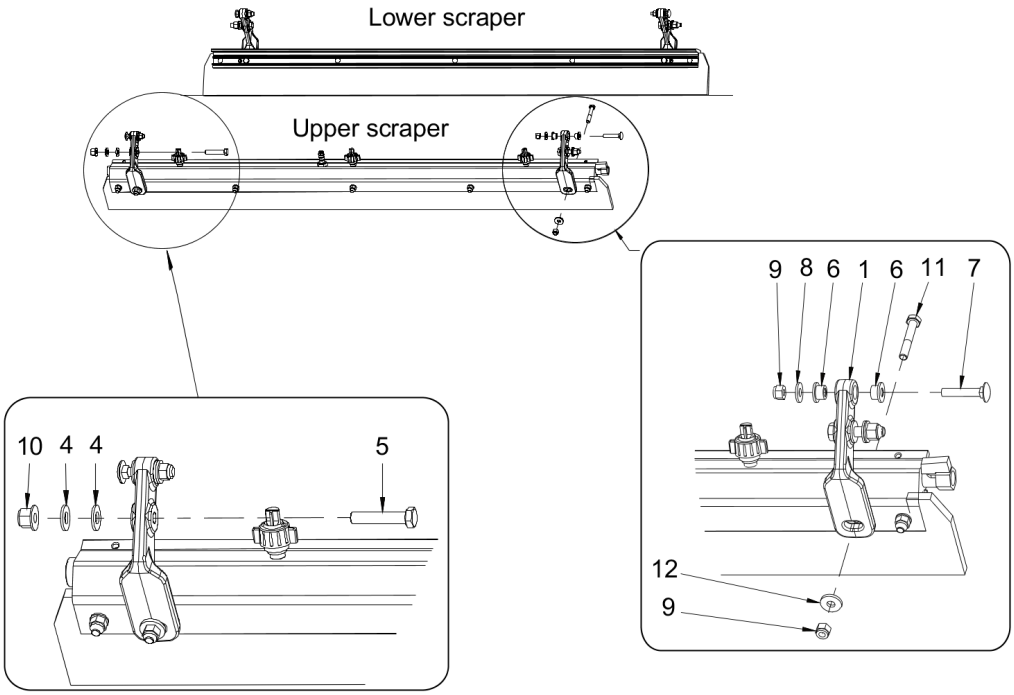


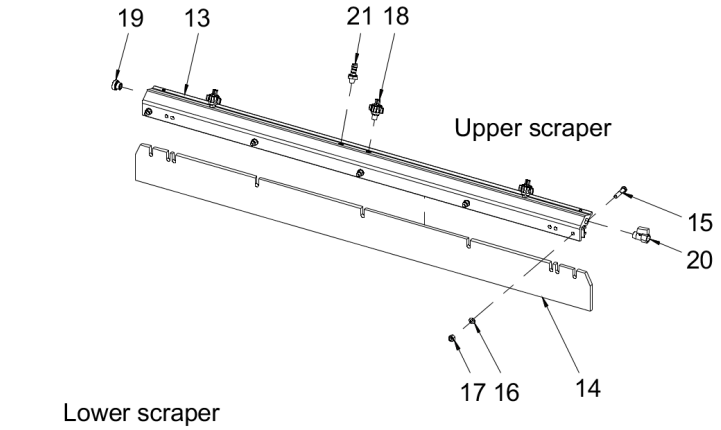


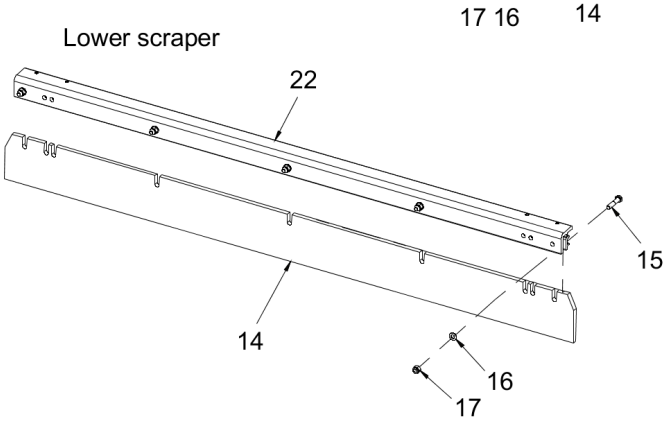

| Item | Part No. | Name | Qty | L | C | SN INFO |
|---|---|---|---|---|---|---|
| 1 | 4812121858 | Bracket | 4 | | | |
| 4 | 4700791938 | Washer | 8 | | | |
| 5 | 4700500091 | Screw | 4 | | | |
| 6 | 4700791939 | Bushing | 8 | | | |
| 7 | 4700791775 | Bolt | 4 | | | |
| 8 | 4700791304 | Steel plain washer | 4 | | | |
| 9 | 4700586003 | Lock nut M8 | 8 | | | |
| 10 | 4700902287 | Nut, M10 | 4 | | | |
| 11 | 4700500025 | Screw | 4 | | | |
| 12 | 4700904640 | Steel plain washer | 4 | | | |
| 13 | 4812129284 | Sprinkler pipe | 1 | | | |
| 14 | 4812129285 | Scraper blade | 1 | | | |
| 15 | 4700500023 | Screw M8x45 | 10 | | | |
| 16 | 4700904229 | Steel plain washer 8.4X16X1.5 | 10 | | | |
| 17 | 4700586003 | Lock nut M8 | 10 | | | |
| 18 | 4812124321 | Spraying nozzle | 3 | | | |
| 19 | 4700792072 | End plug | 1 | | | |
| 20 | 4700233215 | Ball valve | 1 | | | |
| 21 | 4700901432 | Hose connection | 1 | | | |
| 22 | 4812129287 | Sprinkler pipe | 1 | | | |
| 23 | 4812129483 | Sprinkler pipe | 1 | | | |
| 24 | 4812129481 | Scraper blade | 1 | | | |
| 25 | 4700500230 | Hexagon head screw M | 5 | | | |
| 26 | 4700904229 | Steel plain washer 8.4X16X1.5 | 5 | | | |
| 27 | 4700586003 | Lock nut M8 | 5 | | | |

**Frames** Spring loaded scraper

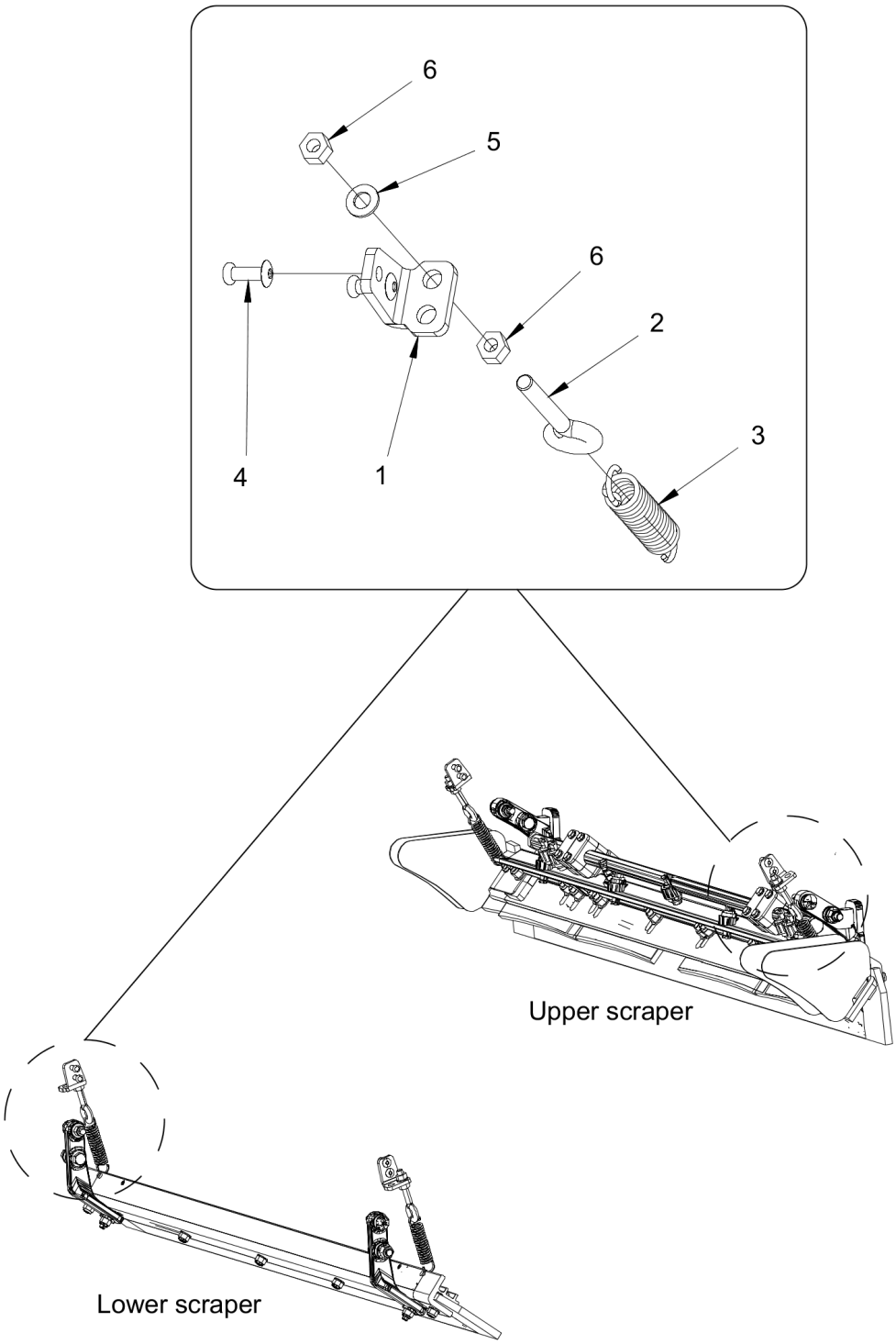

| Item | Part No. | Name | Qty | L | C | SN INFO |
|---|---|---|---|---|---|---|
| 1 | 4812126984 | Bracket | 4 | | | |
| 2 | 4700792189 | Eye bolt | 4 | | | |
| 3 | 4700359043 | Spring | 4 | | | |
| 4 | 4700791666 | Blind rivet | 8 | | | |
| 5 | 4700904229 | Steel plain washer 8.4X16X1.5 | 4 | | | |
| 6 | 4700570005 | Hexagon nut M | 8 | | | |

**Frames** Scraper, wheels

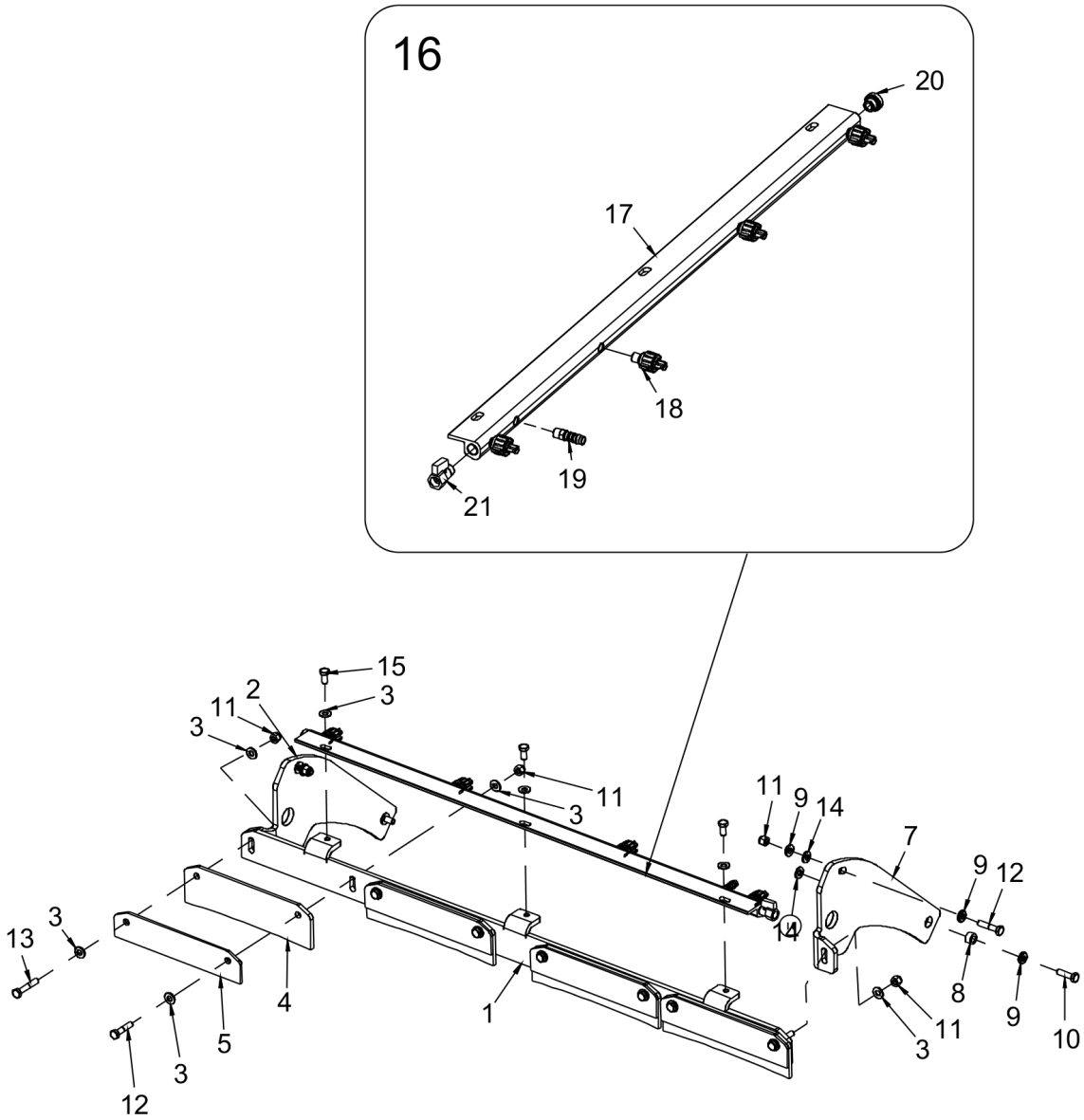

| Item | Part No. | Name | Qty | L | C | SN INFO |
|---|---|---|---|---|---|---|
| 1 | 4812132269 | Bracket | 1 | | | |
| 2 | 4812130350 | Bracket | 1 | | | |
| 3 | 4700904230 | Plain washer M10 10.5X22X2.0 | 19 | | | |
| 4 | 4812130352 | Scraper blade | 4 | | | |
| 5 | 4812130353 | Scraper bracket | 4 | | | |
| 7 | 4812130349 | Side cover | 1 | | | |
| 8 | 4700355869 | Spacer sleeve | 2 | | | |
| 9 | 4700904557 | Steel plain washer | 6 | | | |
| 10 | 4700500030 | Hexagon screw M | 2 | | | |
| 11 | 4700586018 | Hex bolt M06X020H 8.8 A2K | 10 | | | |
| 12 | 4700500161 | Screw M10x45 | 8 | | | |
| 13 | 4700500032 | Hexagon Screw M | 2 | | | |
| 14 | 4700791938 | Washer | 4 | | | |
| 15 | 4700500048 | Hex. Head screw | 3 | | | |
| 16 | 4812132268 | Sprinkler pip, cpl | 1 | | | |
| 17 | 4812132267 | Sprinkler pipe | 1 | | | |
| 18 | 4812124321 | Spraying nozzle | 4 | | | |
| 19 | 4700791977 | Hose connection | 1 | | | |
| 20 | 4700792072 | End plug | 1 | | | |
| 21 | 4700233215 | Ball valve | 1 | | | |

**Frames** Front frame

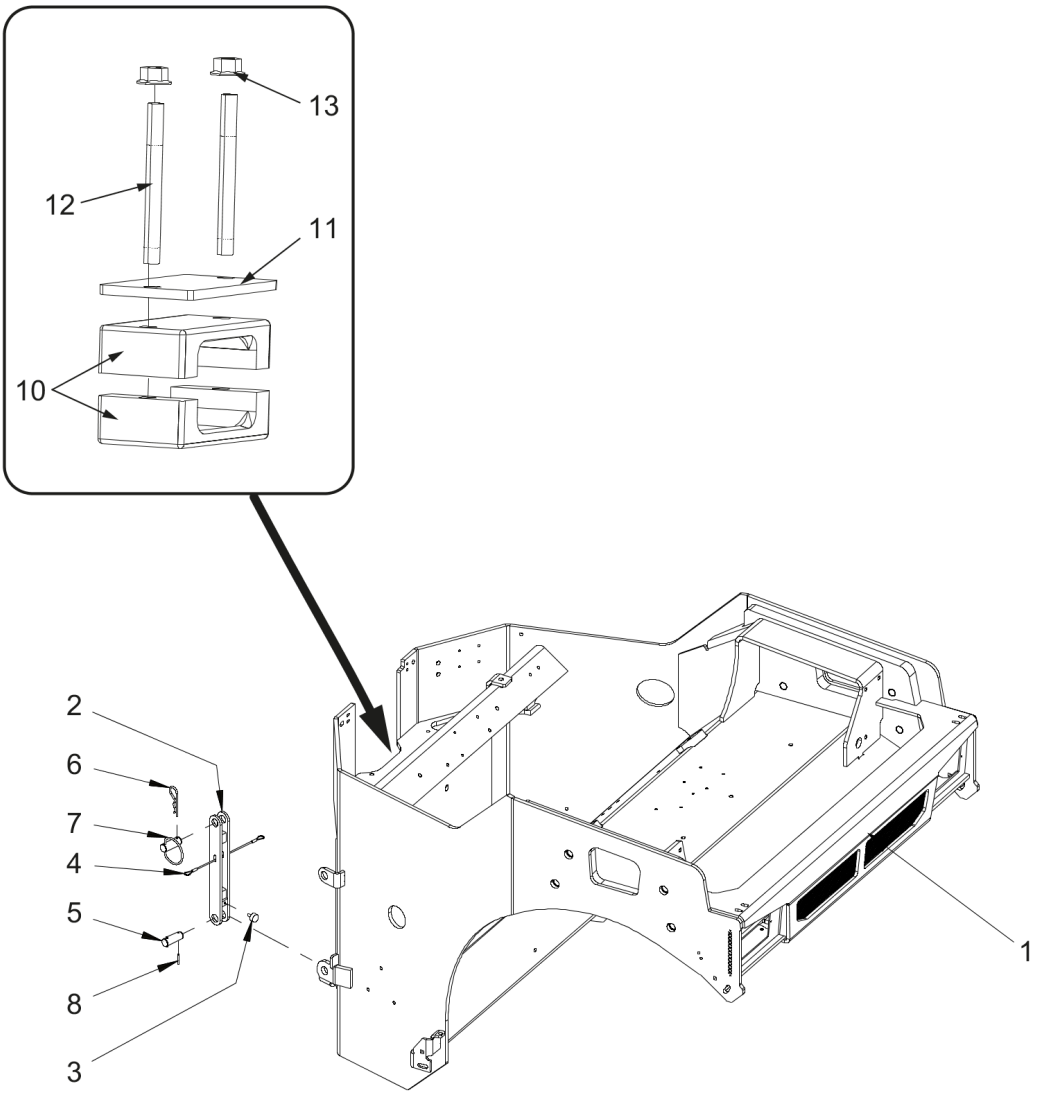

| Item | Part No. | Name | Qty | L | C | SN INFO |
|---|---|---|---|---|---|---|
| 1 | 4812129500 | Front frame | 1 | | | |
| 2 | 4812129879 | Articulated joint lock | 1 | | | |
| 3 | 4700792607 | Shock absorber | 1 | | | |
| 4 | 4700343775 | Plastic insulation steel wire | 1 | | | |
| 5 | 4812126082 | Shaft | 2 | | | |
| 6 | 4700635061 | Locking clip | 1 | | | |
| 7 | 4700357488 | Spring | 1 | | | |
| 8 | 4700630040 | Expanding | 2 | | | |
| 10 | 4700343732 | Hose clamp | 2 | | | |
| 11 | 4700335914 | Cover plate | 1 | | | |
| 12 | 4700904056 | Stud | 2 | | | |
| 13 | 4700792817 | Hexagon nut with flange | 2 | | | |

**Frames** Rear frame

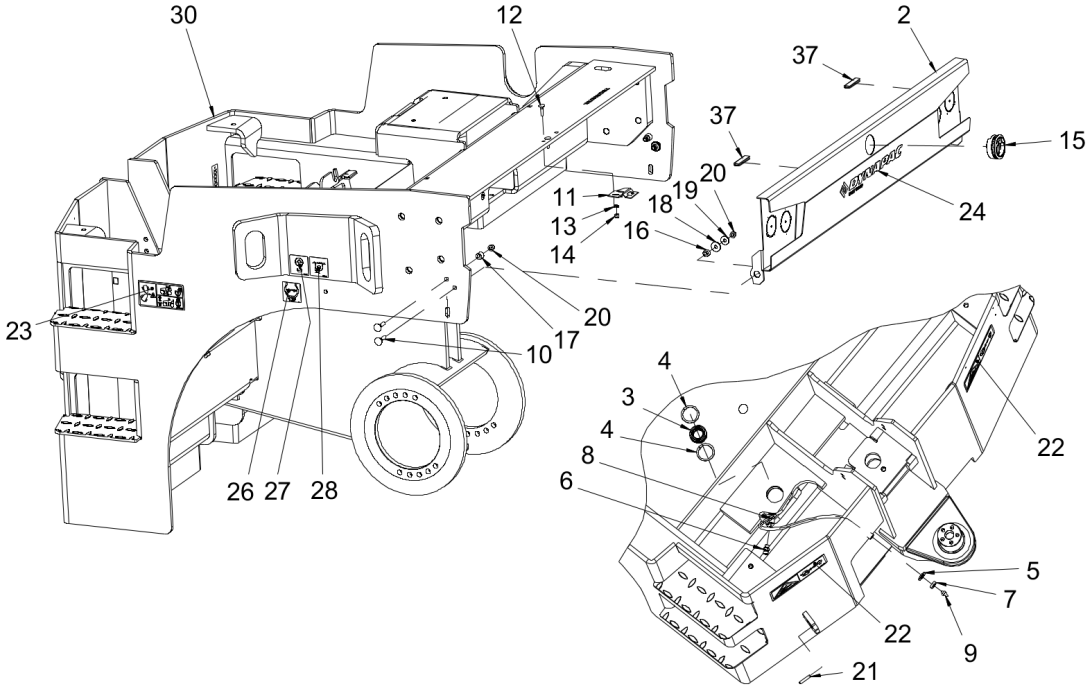


29

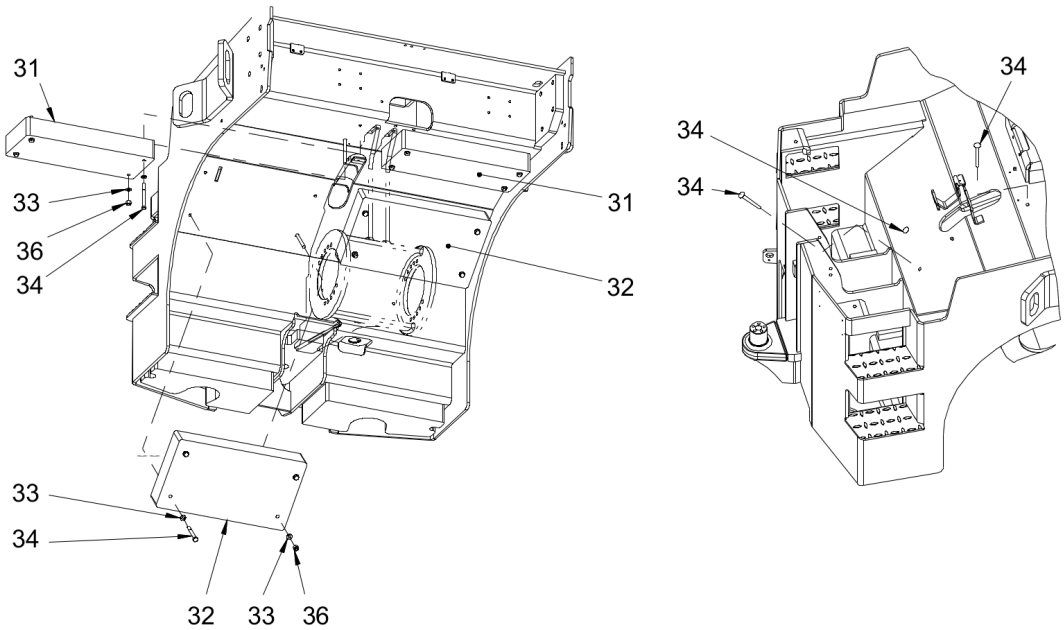

| Item | Part No. | Name | Qty | L | C | SN INFO |
|---|---|---|---|---|---|---|
| 2 | 4812130281 | Cover | 1 | | | |
| 3 | 4812125414 | Bearing | 1 | | | |
| 4 | 4700151012 | Retaining ring | 2 | | | |
| 5 | 4700904231 | Steel plain washer | 1 | | | |
| 6 | 4811000534 | Straight connector | 1 | | | |
| 7 | 4700903831 | Hexagon nut | 1 | | | |
| 8 | 4812117733 | Hydraulic hose | 1 | | | |
| 9 | 0544210600 | Grease nipple | 1 | | | |
| 10 | 4812117106 | Cup square neck bolt | 4 | | | |
| 11 | 4812126012 | Lock fittings | 1 | | | |
| 12 | 4700903923 | Cup square neck bolt | 2 | | | |
| 13 | 4700603010 | Washer 6,4x12x3 | 2 | | | |
| 14 | 4700586002 | Lock nut M | 2 | | | |
| 15 | 4812125978 | Latch | 1 | | | |
| 16 | 4812126957 | Spacer sleeve | 2 | | | |
| 17 | 4700371728 | Spacer sleeve | 2 | | | |
| 18 | 4700903662 | Washer | 2 | | | |
| 19 | 4700904640 | Steel plain washer | 2 | | | |
| 20 | 4700586003 | Lock nut M8 | 4 | | | |
| 21 | 4700629024 | Pin | 1 | | | |
| 22 | 4700903422 | Safety decal "HAZARDOUS AREA" | 2 | | | |
| 23 | 4812125363 | Safety decal "RISK OF CRUSHING" | 1 | | | |
| 24 | 4812127714 | Decal FAYAT DYNAPAC 350 WH | 1 | | | |
| 26 | 4812116992 | Decal "TYRE PRESSURE" 170-250 kPa | 2 | | | |
| 27 | 4700357587 | Label lifting point | 2 | | | |
| 28 | 4700382751 | Decal "SECURING POINT/TIE DOWN" | 2 | | | |
| 29 | 4812130692 | Frame, rear | 1 | | | |
| 30 | 4812130320 | Frame | 1 | | | |
| 31 | 4812130899 | Weight | 2 | | | |
| 32 | 4812130900 | Weight | 2 | | | |
| 33 | 4812122654 | Steel plain washer | 16 | | | |
| 34 | 4700500077 | Hexagon head screw M10x90 | 13 | | | |
| 35 | 4700792236 | Screw M10x100 | 3 | | | |
| 36 | 4700586018 | Hex bolt M06X020H 8.8 A2K | 3 | | | |
| 37 | 4700202028 | Edge trim | 0,06 | | | |

**Frames** Sprinkler pump

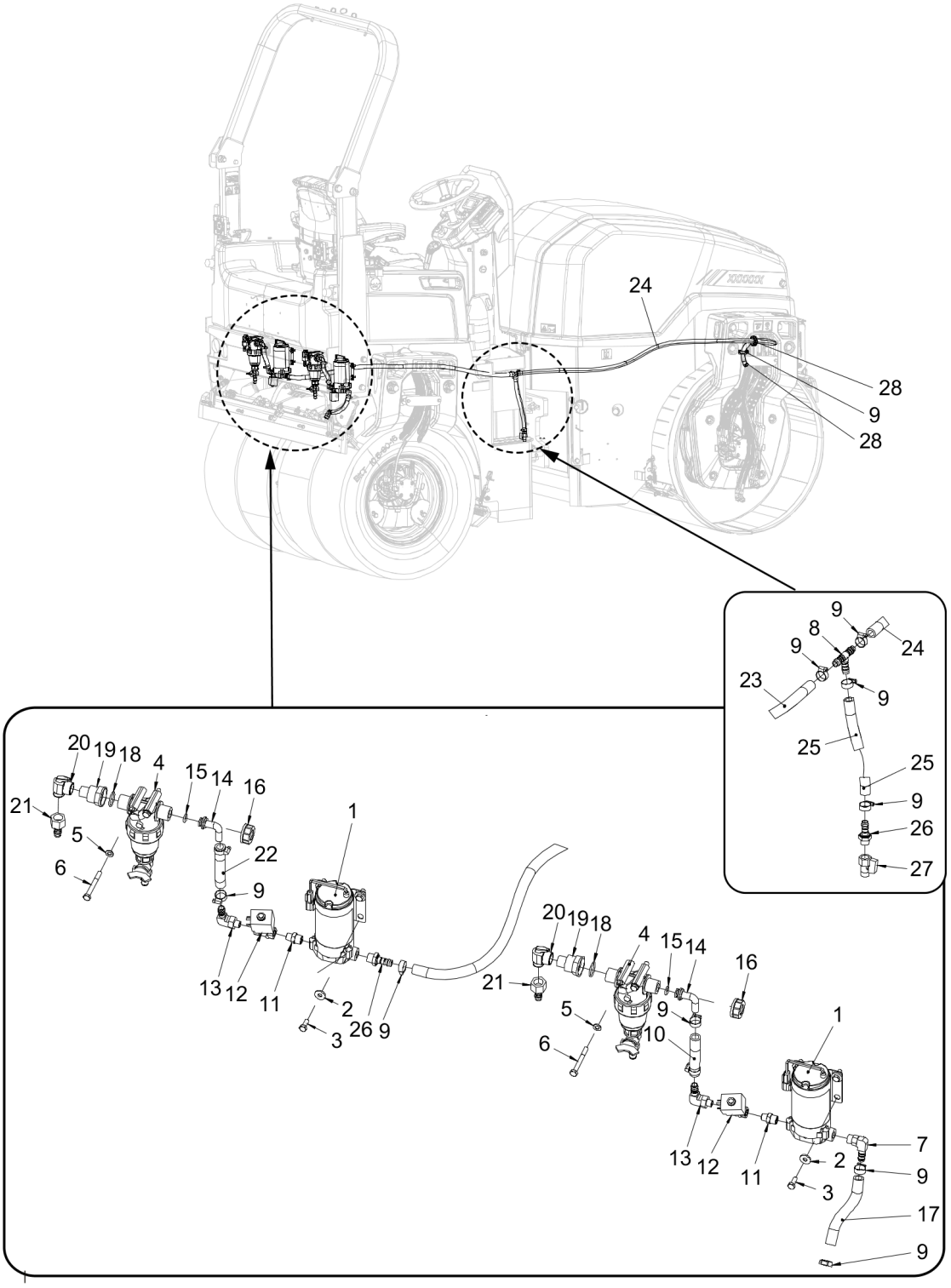

| Item | Part No. | Name | Qty | L | C | SN INFO |
|---|---|---|---|---|---|---|
| 1 | 4812125871 | Sprinkler pump | 2 | | | |
| 2 | 4700904640 | Steel plain washer | 8 | | | |
| 3 | 4700500053 | Screw, M8x20 mm 8.8 A2K | 8 | | | |
| 4 | 4812111325 | Water filter | 2 | | | |
| 5 | 4700904229 | Steel plain washer 8.4X16X1.5 | 4 | | | |
| 6 | 4700500189 | Screw | 4 | | | |
| 7 | 4700234932 | Adapter | 1 | | | |
| 8 | 4700923735 | Hose connection | 1 | | | |
| 9 | 4700313002 | Hose clamp | 12 | | | |
| 10 | 4812112074 | Plastic hose (x m) | 0.12 | | | |
| 11 | 4700377611 | Straight connector | 2 | | | |
| 12 | 4700287713 | Solenoid valve | 2 | | | |
| 13 | 4700901431 | Hose connection | 2 | | | |
| 14 | 4812111330 | Hose connection | 2 | | | |
| 15 | 4700480852 | O-ring 70 | 2 | | | |
| 16 | 4700792779 | Swivel nut | 2 | | | |
| 17 | 4812112074 | Plastic hose (x m) | 0.17 | | | |
| 18 | 4700160313 | O-ring 70 | 2 | | | |
| 19 | 4812111331 | Reducer nipple | 2 | | | |
| 20 | 4812126907 | Ball valve | 2 | | | |
| 21 | 4812112451 | Hose connection | 2 | | | |
| 22 | 4812112074 | Plastic hose (x m) | 0.12 | | | |
| 23 | 4812112074 | Plastic hose (x m) | 1.38 | | | |
| 24 | 4812112074 | Plastic hose (x m) | 1.965 | | | |
| 25 | 4812112074 | Plastic hose (x m) | 0.285 | | | |
| 26 | 4700234931 | Adapter | 2 | | | |
| 27 | 4700233215 | Ball valve | 1 | | | |
| 28 | 4812119127 | Grommet with membrane | 2 | | | |

**Frames** Sprinkler pipe

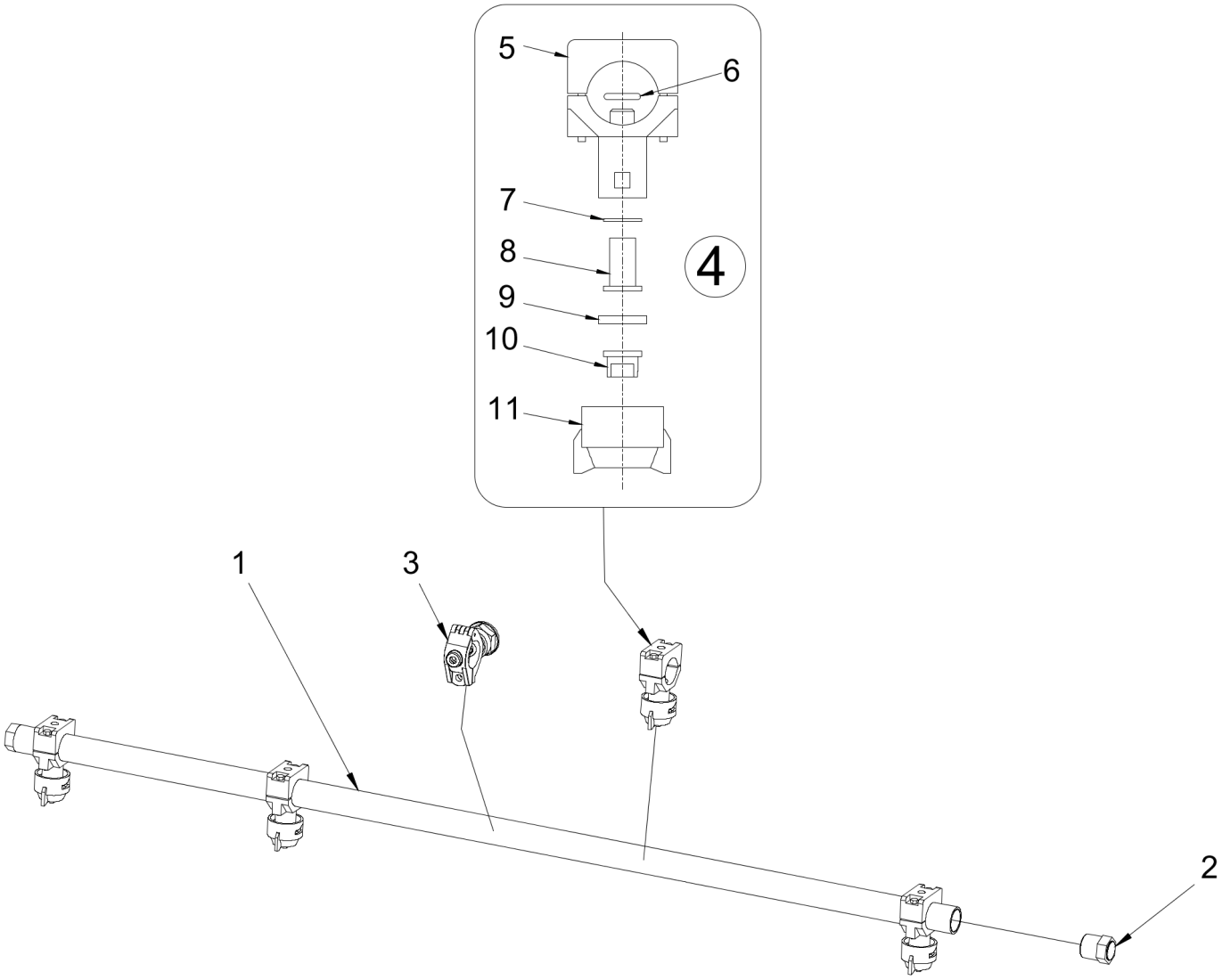

| Item | Part No. | Name | Qty | L | C | SN INFO |
|---|---|---|---|---|---|---|
| 1 | 4812129566 | Sprinkler pipe | 1 | | | |
| 2 | 4812130181 | Plug | 2 | | | |
| 3 | 4812130182 | Clamp | 1 | | | |
| 4 | 4812130184 | Sprinkler | 4 | | | |
| 5 | 4812130183 | Pipe connection | 1 | | | |
| 6 | 4700923962 | O-ring | 1 | | | |
| 7 | 4700903010 | Nylon ring | 1 | | | |
| 8 | 4812130161 | Strainer | 1 | | | |
| 9 | 4700904116 | Gasket | 1 | | | |
| 10 | 4700791117 | Nozzle body Orange | 1 | | | |
| 11 | 4700923681 | Quick coupling, black | 1 | | | |

**Frames** Steering hitch

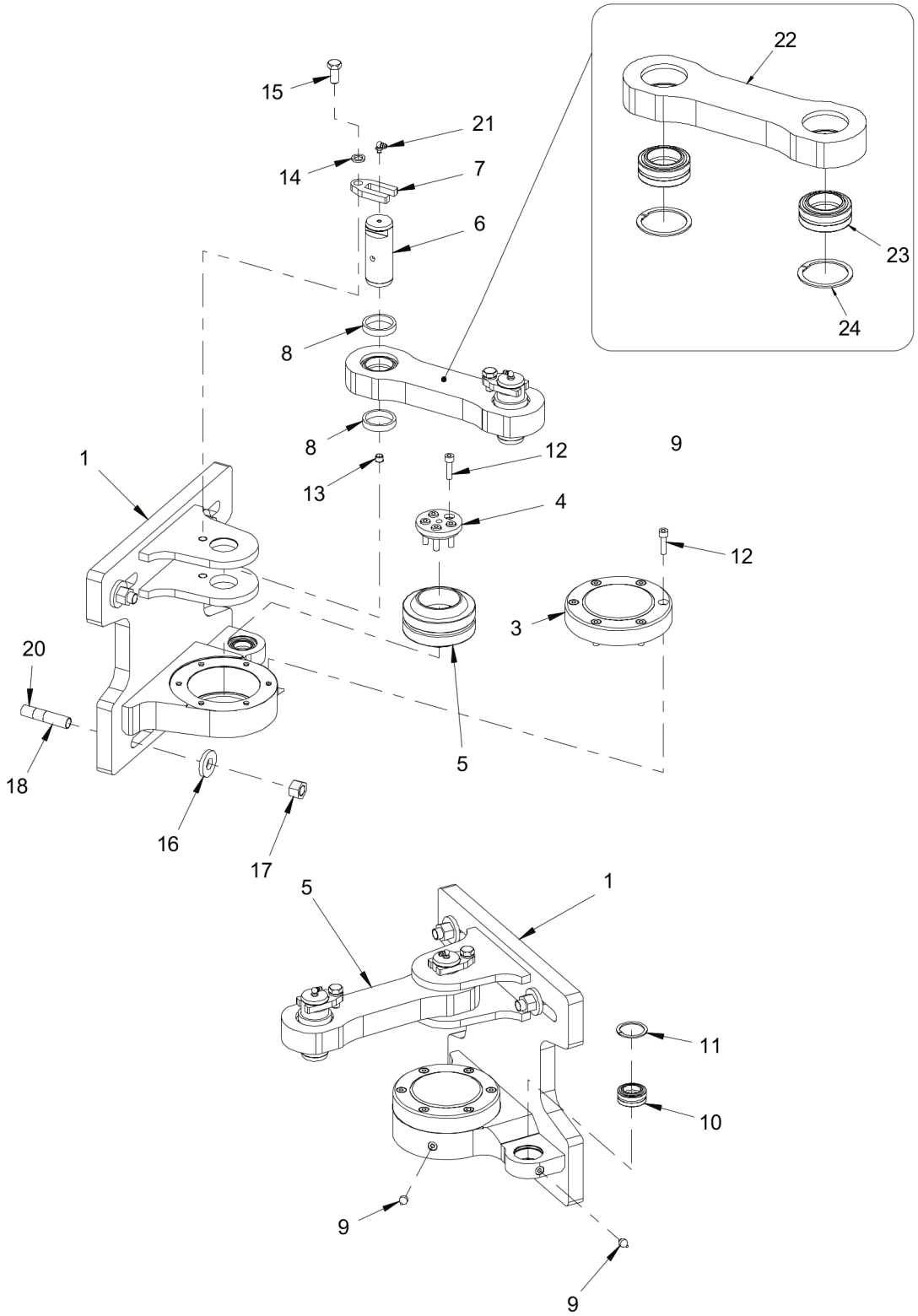

| Item | Part No. | Name | Qty | L | C | SN INFO |
|---|---|---|---|---|---|---|
| 1 | 4812129737 | Articulated joint plate | 1 | | | |
| 2 | 4812125133 | Bearing unit | 1 | | | |
| 3 | 4812129739 | Bearing cap | 1 | | | |
| 4 | 4812129740 | Cover cap | 1 | | | |
| 5 | 4812130318 | Radial spherical plain bearing | 1 | | | |
| 6 | 4812125398 | Shaft | 2 | | | |
| 7 | 4812125399 | Washer | 2 | | | |
| 8 | 4812128394 | Spacer sleeve | 4 | | | |
| 9 | 4700926214 | Lubrication nipple | 2 | | | |
| 10 | 4812125414 | Bearing | 1 | | | |
| 11 | 4700151012 | Retaining ring | 1 | | | |
| 12 | 4700508048 | Hexagon socket head cap screw M | 11 | | | |
| 13 | 4700792083 | Protective plug | 2 | | | |
| 14 | 4700900994 | Lock washer | 2 | | | |
| 15 | 4700500051 | Hexagon screw M | 2 | | | |
| 16 | 0300027623 | Plain washer | 6 | | | |
| 17 | 4700586021 | Lock nut | 6 | | | |
| 18 | 4812130583 | Stud | 6 | | | |
| 21 | 0544110011 | Lubricant nipple | 2 | | | |
| 22 | 4812125139 | Bracket | 1 | | | |
| 23 | 4812125393 | Bearing | 2 | | | |
| 24 | 4700151021 | Snap ring | 2 | | | |

**Frames** 4812130117_Hydraulic cylinder

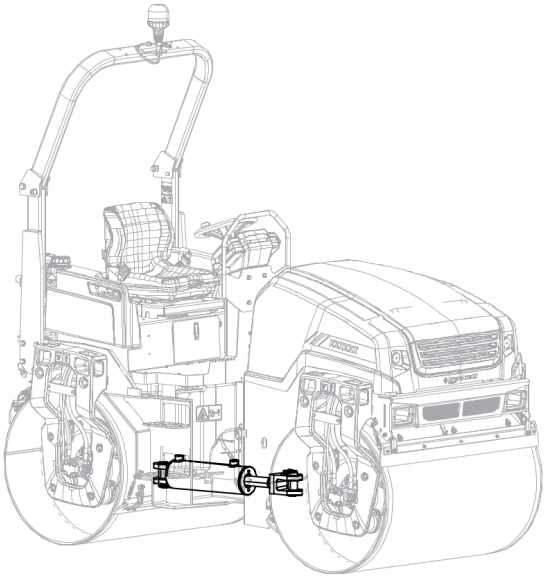

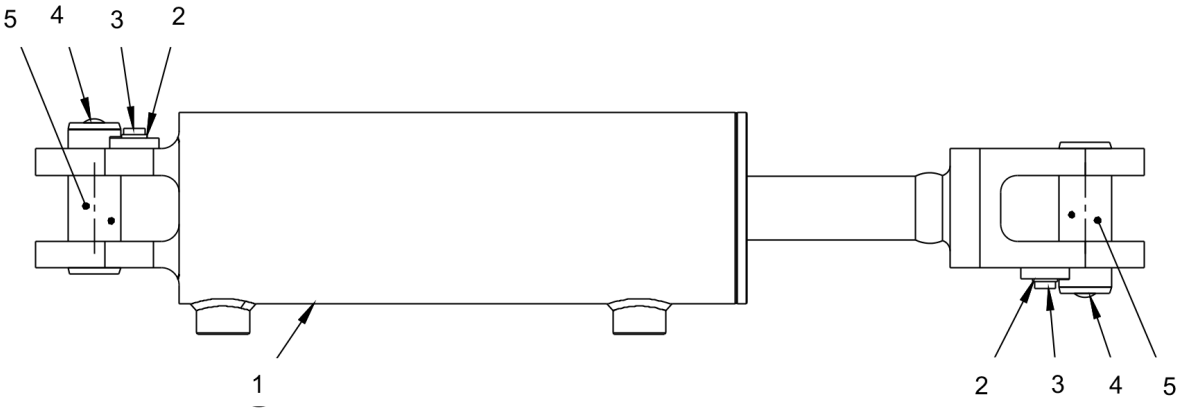


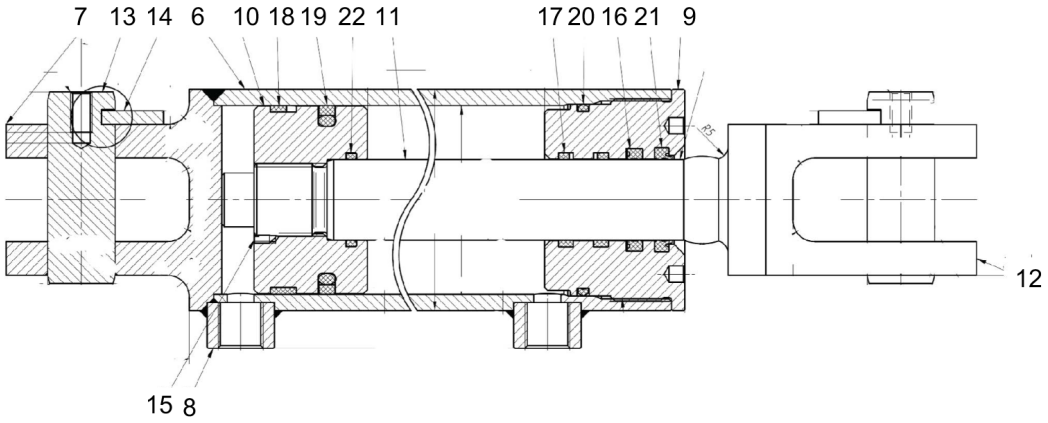

| Item | Part No. | Name | Qty | L | C | SN INFO |
|---|---|---|---|---|---|---|
| 0 | 4812130117 | Hydraulic cylinder, cpl. | 1 | | | |
| 1 | 4812132194 | Hydraulic cylinder | 1 | | | |
| 2 | 4700904228 | Steel plain washer | 4 | | | |
| 3 | 4812127030 | Screw | 4 | | | |
| 4 | 4700926215 | Protective plug | 2 | | | |
| 6 | - | Cylinder tube | 1 | | | |
| 7 | - | Cylinder end | 1 | | | |
| 8 | - | Connection | 2 | | | |
| 9 | - | Pilot sleeve | 1 | | | |
| 10 | - | Piston | 1 | | | |
| 11 | - | Piston rod | 1 | | | |
| 12 | - | Fork | 1 | | | |
| 13 | - | Pin | 2 | | | |
| 14 | - | Pin lock | 2 | | | |
| 15 | - | Blind cover | 1 | | | |
| 17 | - | Piston guide | 2 | | | |
| 18 | - | Piston guide | 1 | | | |
| 19 | - | Piston seal | 1 | | | |
| 20 | - | Static seal | 1 | | | |
| 21 | - | Wiper | 1 | | | |
| 22 | - | O-ring | 1 | | | |

**Drum / Wheels** Drum

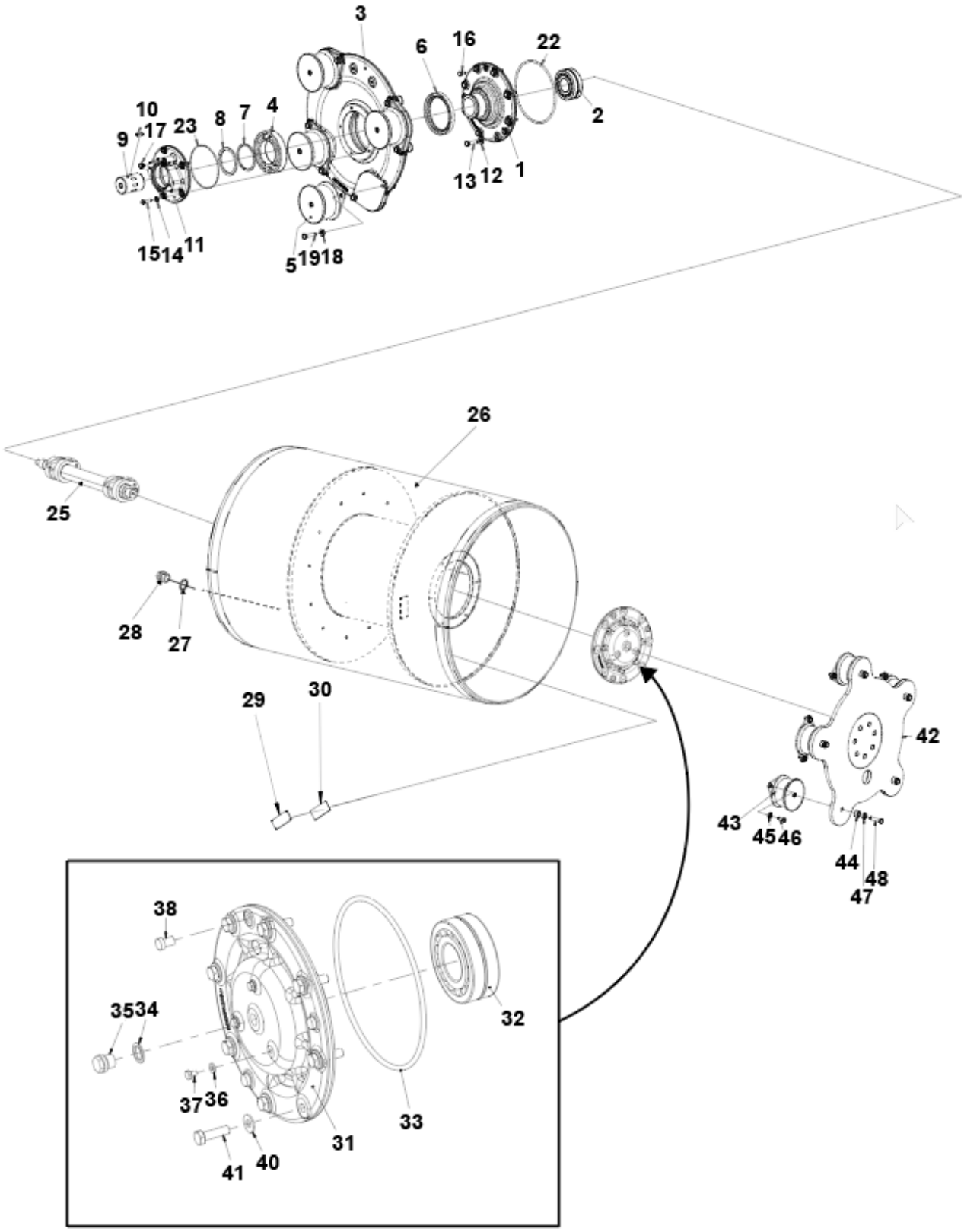

| Item | Part No. | Name | Qty | L | C | SN INFO |
|---|---|---|---|---|---|---|
| 1 | 4812130298 | Drum bearing housing | 1 | | | |
| 2 | 4812130497 | Spherical roller bearing | 1 | | | |
| 3 | 4812130300 | Bearing housing | 1 | | | |
| 4 | 4812131079 | Deep groove ball bearing | 1 | | | |
| 5 | 4812129968 | Shock absorber | 4 | | | |
| 6 | 4700163049 | Radial lip-type seal | 1 | | | |
| 7 | 4700357114 | Spacer ring | 1 | | | |
| 8 | 4700903154 | Retaining ring | 1 | | | |
| 9 | 4700357159 | Coupling | 1 | | | |
| 10 | 4700350029 | Feather key | 1 | | | |
| 11 | 4812129378 | Adapter | 1 | | | |
| 12 | 4700904230 | Plain washer M10 10.5X22X2.0 | 8 | | | |
| 13 | 4700500030 | Hexagon screw M | 8 | | | |
| 14 | 4700904229 | Steel plain washer 8.4X16X1.5 | 5 | | | |
| 15 | 4700500022 | Hexagon screw M8X30 8.8 A2K | 5 | | | |
| 16 | 4700903287 | Plug | 3 | | | |
| 17 | 4700343490 | Air breather | 1 | | | |
| 18 | 4700904557 | Steel plain washer | 8 | | | |
| 19 | 4812110596 | Hexagon head screw M10x40 10,9 A3K | 8 | | | |
| 22 | 4700923951 | O-ring | 1 | | | |
| 23 | 4700160214 | O-ring | 1 | | | |
| 25 | 4812130227 | Eccentric shaft | 1 | | | |
| 26 | 4812130765 | Drum | 1 | | | |
| 27 | 4700162017 | Seal ring | 1 | | | |
| 28 | 4700343744 | Magnetic plug | 1 | | | |
| 29 | 4700343801 | Serial Number plate | 1 | | | |
| 30 | | Tape | 1 | | | |
| 31 | 4812130303 | Drum bearing housing | 1 | | | |
| 32 | 4812130497 | Spherical roller bearing | 1 | | | |
| 33 | 4700923951 | O-ring | 1 | | | |
| 34 | 4700162012 | Seal ring | 1 | | | |
| 35 | 0686424100 | Steel plug threaded | 1 | | | |
| 36 | 4700904228 | Steel plain washer | 3 | | | |
| 37 | 4700500044 | Screw M6x8 | 3 | | | |
| 38 | 4700903287 | Plug | 3 | | | |

| Item | Part No. | Name | Qty | L | C | SN INFO |
|---|---|---|---|---|---|---|
| 40 | 4700904230 | Plain washer M10 10.5X22X2.0 | 8 | | | |
| 41 | 4700500030 | Hexagon screw M | 8 | | | |
| 42 | 4812129334 | Drive disc | 1 | | | |
| 43 | 4812129968 | Shock absorber | 5 | | | |
| 44 | 4812110346 | Spacer | 5 | | | |
| 45 | 4700904557 | Steel plain washer | 10 | | | |
| 46 | 4812110663 | Hexagon head screw M10x25H 10,9 A3K | 10 | | | |
| 47 | 4700904703 | Plain washer 13x24x4 mm | 5 | | | |
| 48 | 4812110644 | Hexagon screw M | 5 | | | |

**Drum / Wheels** Wheel module

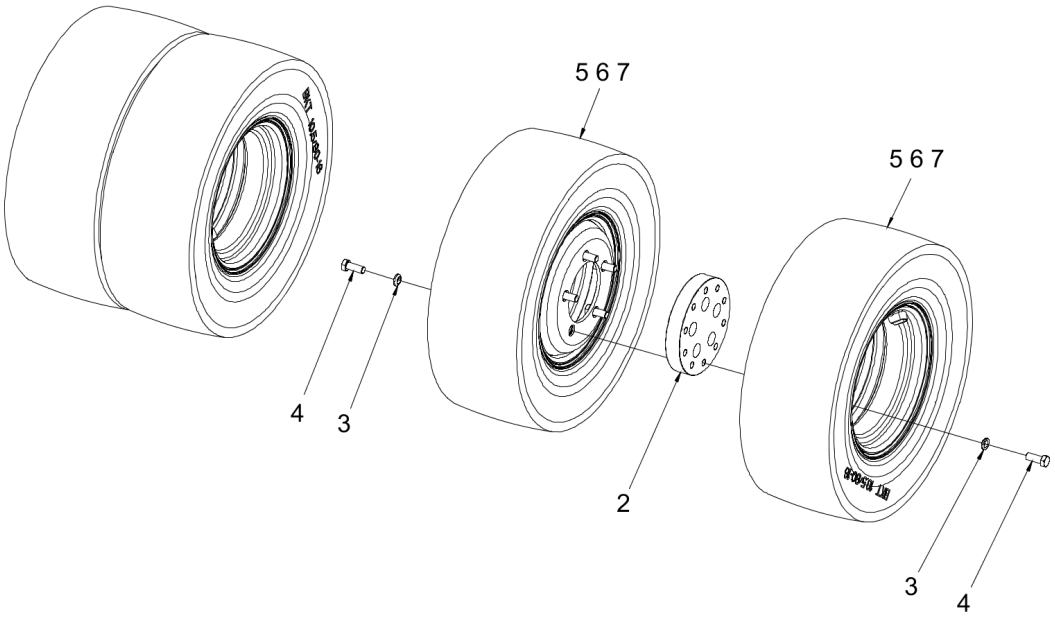

| Item | Part No. | Name | Qty | L | C | SN INFO |
|---|---|---|---|---|---|---|
| 2 | 4812126602 | Hub | 2 | | | |
| 3 | 4700902252 | Washer | 20 | | | |
| 4 | 4700500101 | Screw M20 x 50 mm | 20 | | | |
| 5 | 4812127668 | Wheel, cpl | 4 | | | |
| 6 | 4812128362 | Smooth tyre, BKT 10.5/80-16 | 4 | | | |
| 7 | 4812127667 | Rim | 4 | | | |

**Engine room** Fan

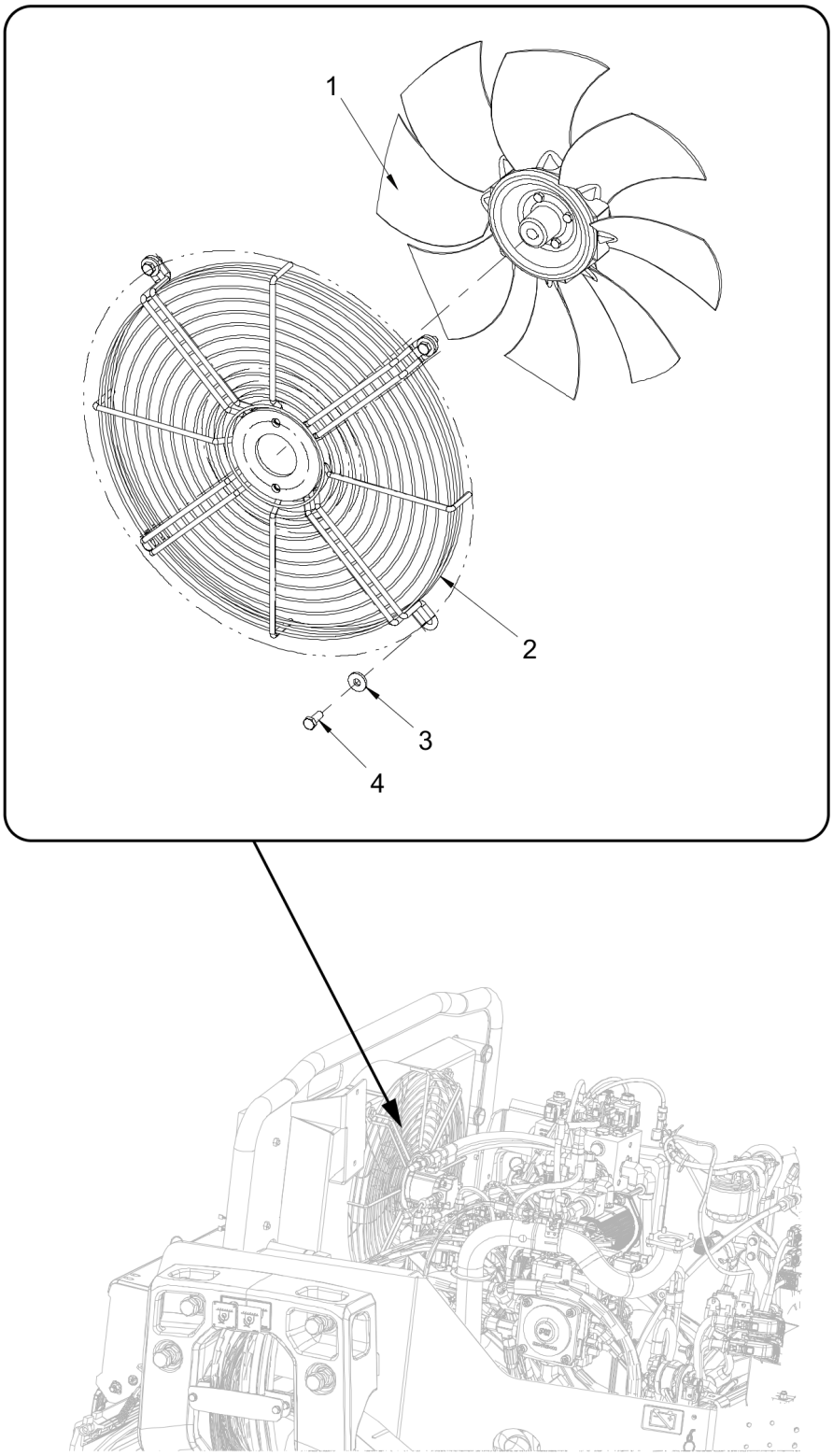

| Item | Part No. | Name | Qty | L | C | SN INFO |
|---|---|---|---|---|---|---|
| 1 | 4812130638 | Fan | 1 | | | |
| 2 | 4812130639 | Fan  protection | 1 | | | |
| 3 | 4700904640 | Steel plain washer | 4 | | | |
| 4 | 4700500053 | Screw, M8x20 mm 8.8 A2K | 4 | | | |

**Engine room** Air cleaner

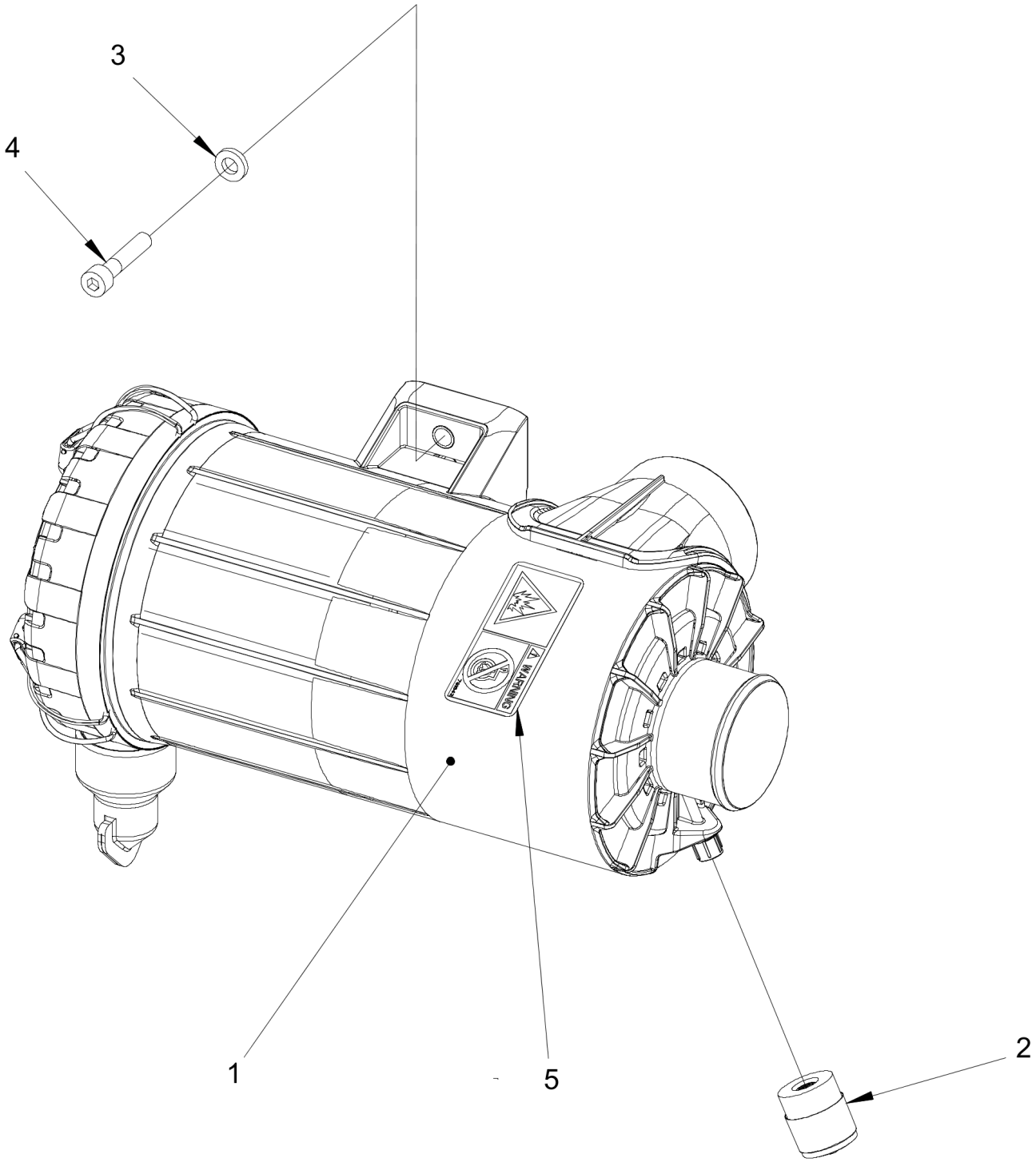

| Item | Part No. | Name | Qty | L | C | SN INFO |
|---|---|---|---|---|---|---|
| 1 | 4812125527 | Air filter | 1 | | | |
| 1 | 4812161586 | Air filter, main | 1 | | | |
| 1 | 4812161587 | Air filter element, Safety | 1 | | | |
| 2 | 4700499497 | Indicator | 1 | | | |
| 3 | 4700904556 | Steel plain washer | 2 | | | |
| 4 | 4700508056 | Screw M8x40 | 2 | | | |
| 5 | 4700791642 | Safety decal, Use of starting fluid prohib. | 1 | | | |

**Engine room** Air hose module

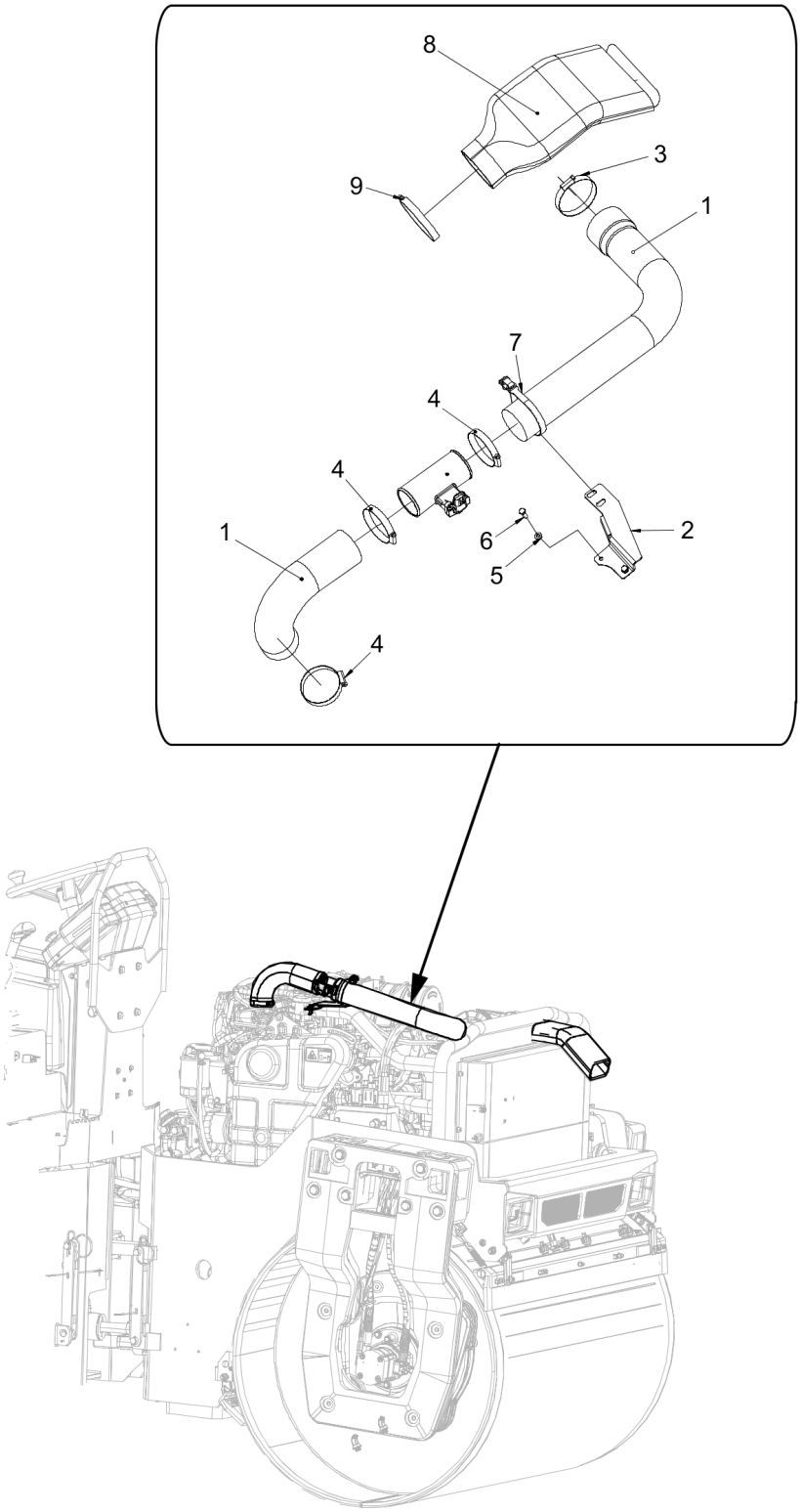

| Item | Part No. | Name | Qty | L | C | SN INFO |
|---|---|---|---|---|---|---|
| 1 | 4812130672 | Air hose | 1 | | | |
| 2 | 4812128819 | Air hose | 1 | | | |
| 3 | 4812129078 | Bracket | 1 | | | |
| 4 | 4700313023 | Hose clamp | 1 | | | |
| 5 | 4700313023 | Hose clamp | 3 | | | |
| 6 | 4700904228 | Steel plain washer | 2 | | | |
| 7 | 4700500040 | Hex bolt M06X020H 8.8 A2K | 2 | | | |
| 8 | 4812115835 | Cable tie | 1 | | | |
| 9 | 4812128823 | Air hose | 1 | | | |
| 10 | 4700313038 | Hose clamp | 1 | | | |

**Engine room** Expansion tank

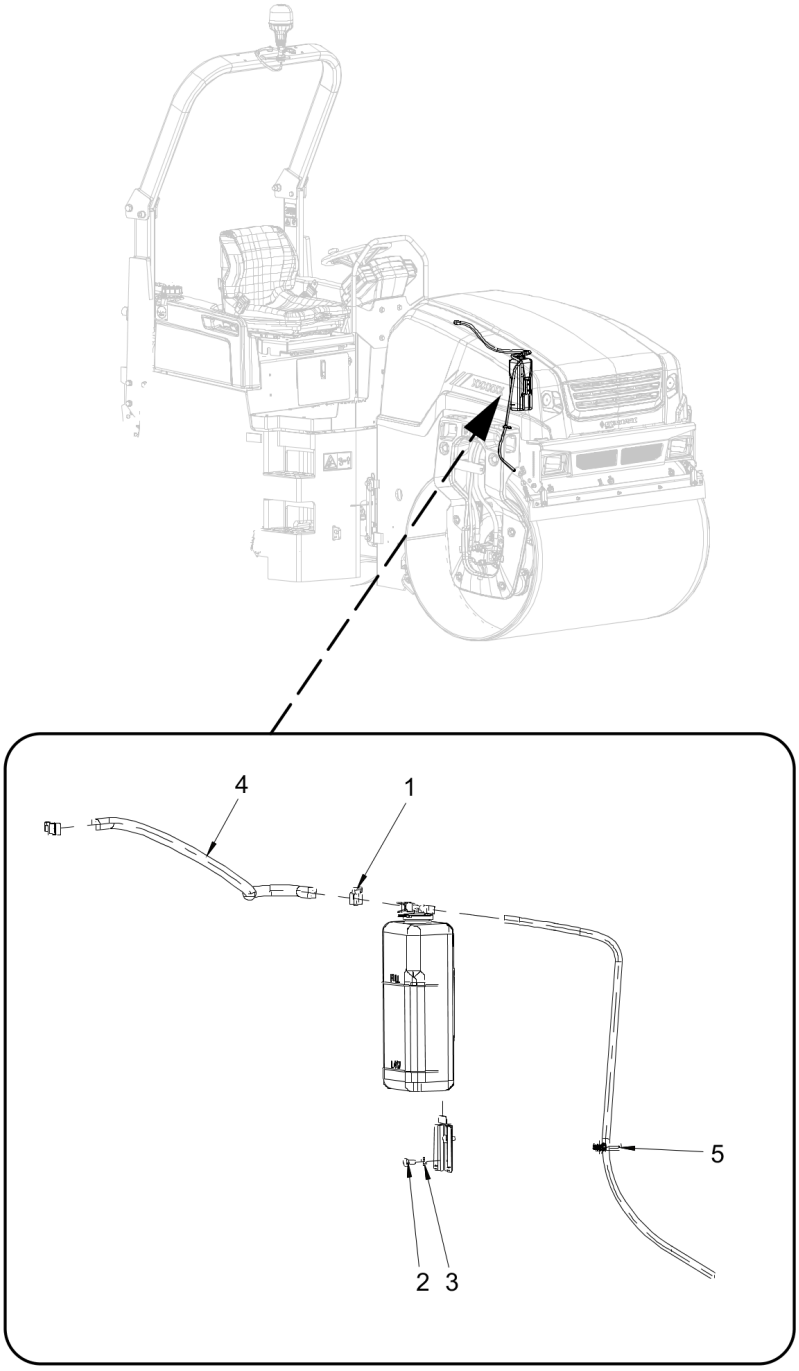

| Item | Part No. | Name | Qty | L | C | SN INFO |
|---|---|---|---|---|---|---|
| 1 | 4700313075 | Hose clamp | 2 | | | |
| 2 | 4700500012 | Hexagon head screw M | 2 | | | |
| 3 | 4700904228 | Steel plain washer | 2 | | | |
| 4 | 4812128578 | Coolant hose | 0.518 | | | |
| 5 | 4700792602 | Cable Tie with Holder, Nylon Black | 1 | | | |

**Engine room** Exhaust system

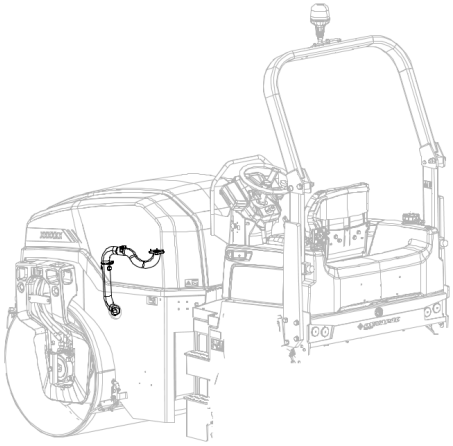

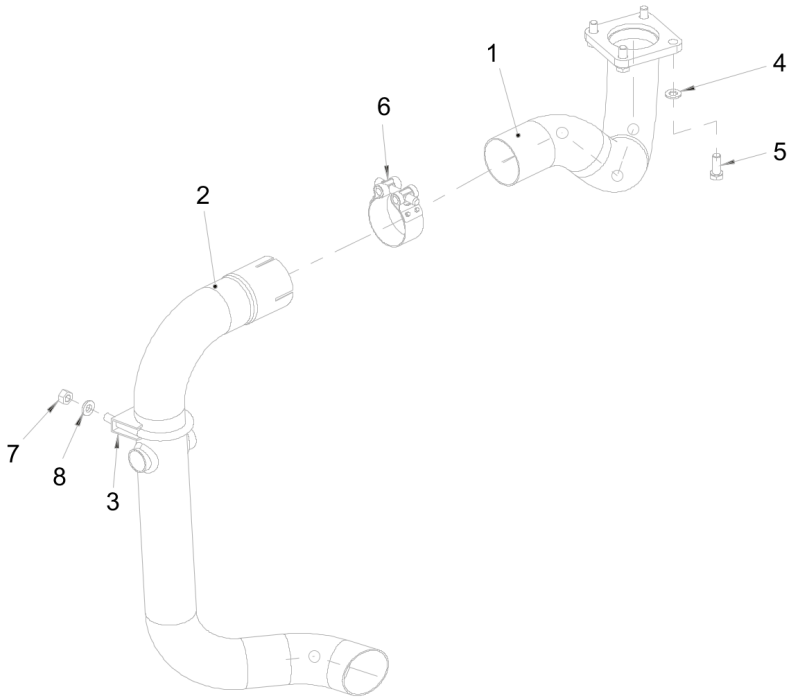

| Item | Part No. | Name | Qty | L | C | SN INFO |
|---|---|---|---|---|---|---|
| 1 | 4812132082 | Exhaust pipe | 1 | | | |
| 2 | 4812130561 | Exhaust pipe | 1 | | | |
| 3 | 4700313100 | Clamp | 1 | | | |
| 4 | 4700904229 | Steel plain washer 8.4X16X1.5 | 4 | | | |
| 5 | 4700500053 | Screw, M8x20 mm 8.8 A2K | 4 | | | |
| 6 | 4812124068 | Clamp | 1 | | | |
| 7 | 4700570005 | Hexagon nut M | 4 | | | |
| 8 | 4700904556 | Steel plain washer | 2 | | | |

**Engine room** Engine hood

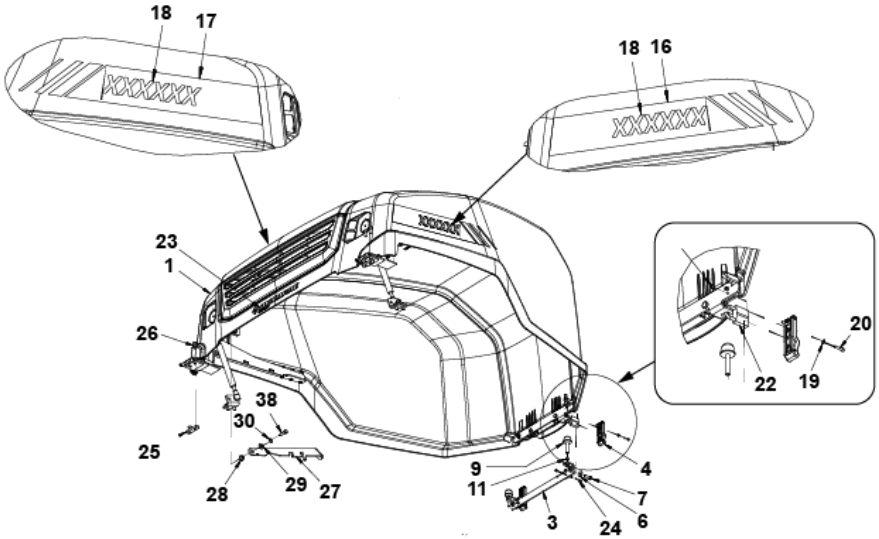


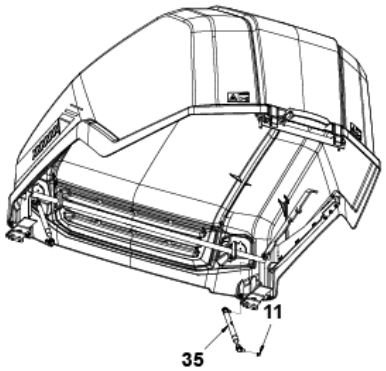


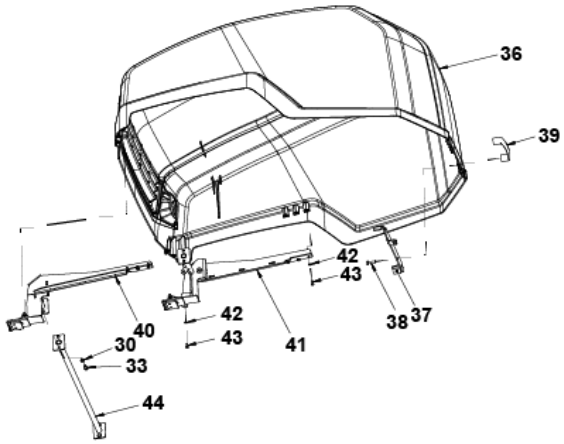

| Item | Part No. | Name | Qty | L | C | SN INFO |
|---|---|---|---|---|---|---|
| 1 | 4812136031 | Engine hood, cpl. | 1 | | | |
| 3 | 4812125831 | Bracket | 1 | | | |
| 4 | 4700388846 | Latch | 2 | | | |
| 6 | 4700904640 | Steel plain washer | 2 | | | |
| 7 | 4700500021 | Hexagon head screw M | 2 | | | |
| 9 | 4812114318 | Shock absorber | 2 | | | |
| 11 | 4700570005 | Hexagon nut M | 6 | | | |
| 15 | 4700903424 | Decal hot surface | 2 | | | |
| 16 | 4812128480 | Decal model code combined | 1 | | | |
| 16.1 | - | Decal "MODEL CODE" | 1 | | | |
| 16.2 | | Decal "GRAPHIC ELEMENT" Right version | 1 | | | |
| 17 | 4812128481 | Decal model code combined | 1 | | | |
| 17.1 | - | Decal "MODEL CODE" | 1 | | | |
| 17.2 | | Decal "GRAPHIC ELEMENT" Left version | 1 | | | |
| 19 | 4700904698 | Plain washer | 8 | | | |
| 20 | 4700903386 | Screw | 4 | | | |
| 21 | 4700923976 | Lock nut | 8 | | | |
| 22 | 4700358881 | LOCK | 1 | | | |
| 23 | 4812127713 | Decal FAYAT DYNAPAC 280 WH | 1 | | | |
| 24 | 4700508054 | Screw | 4 | | | |
| 25 | 4812127078 | Nut plate | 2 | | | |
| 26 | 4700513013 | Hexagon socket countersunk screw | 4 | | | |
| 27 | 4812132214 | Lock | 1 | | | |
| 28 | 4700791939 | Bushing | 1 | | | |
| 29 | 4700791938 | Washer | 1 | | | |
| 30 | 4700904229 | Steel plain washer 8.4X16X1.5 | 5 | | | |
| 33 | 4700500053 | Screw, M8x20 mm 8.8 A2K | 4 | | | |
| 35 | 4812132221 | Gas spring | 2 | | | |
| 36 | - | Engine hood | 1 | | | |
| 37 | 4812125830 | Bracket | 1 | | | |
| 38 | 4700500022 | Hexagon screw M8X30 8.8 A2K | 3 | | | |
| 39 | 4700387948 | Handle | 1 | | | |
| 40 | 4812132200 | Hinge | 1 | | | |
| 41 | 4812132208 | Hinge | 1 | | | |
| 42 | 4700904228 | Steel plain washer | 12 | | | |

| Item | Part No. | Name | Qty | L | C | SN INFO |
|---|---|---|---|---|---|---|
| 43 | 4700500185 | Hexagon head screw M | 12 | | | |
| 44 | 4812132213 | Support | 1 | | | |

**Engine room** Fuel tank module

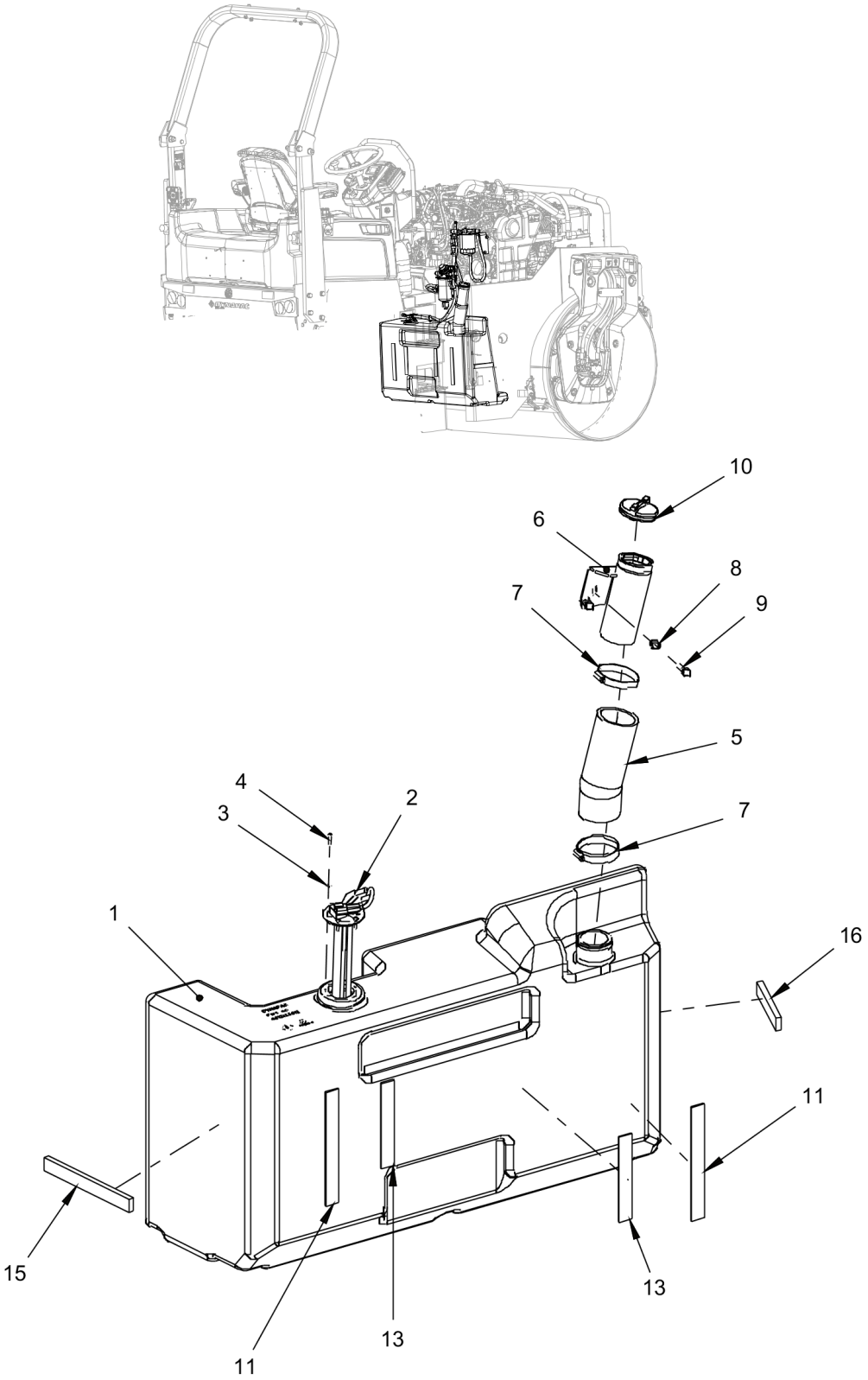

| Item | Part No. | Name | Qty | L | C | SN INFO |
|---|---|---|---|---|---|---|
| 1 | 4812128812 | Fuel tank | 1 | | | |
| 2 | 4700378574 | Level gauge | 1 | | | |
| 3 | 4700904698 | Plain washer | 5 | | | |
| 4 | 4700903236 | Thread rolling screw | 5 | | | |
| 5 | 4812130167 | Hose | 1 | | | |
| 6 | 4812128604 | Bracket | 1 | | | |
| 7 | 4700313023 | Hose clamp | 2 | | | |
| 8 | 4700904556 | Steel plain washer | 2 | | | |
| 9 | 4700500021 | Hexagon head screw M | 2 | | | |
| 10 | 4812128597 | Cap | 1 | | | |
| 11 | 4700297018 | Rubber strip | 0,220 | | | |
| 13 | 4700297018 | Rubber strip | 0,165 | | | |
| 15 | 4700202046 | Rubber strip 25x10 | 0,200 | | | |
| 16 | 4700202046 | Rubber strip 25x10 | 0,125 | | | |

## **Engine room** Fuel hoses

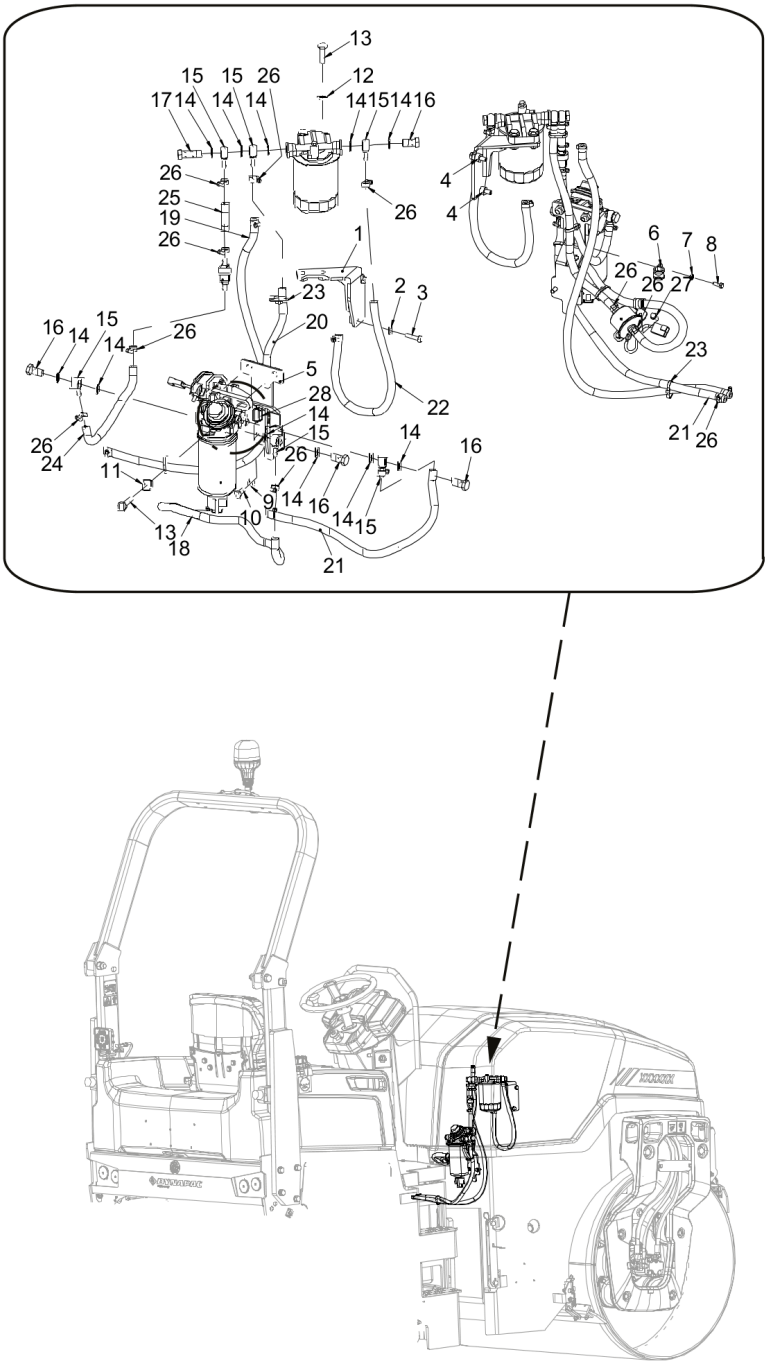

| Item | Part No. | Name | Qty | L | C | SN INFO |
|---|---|---|---|---|---|---|
| 1 | 4812125586 | Bracket | 1 | | | |
| 2 | 4700904229 | Steel plain washer 8.4X16X1.5 | 2 | | | |
| 3 | 4700500022 | Hexagon screw M8X30 8.8 A2K | 2 | | | |
| 4 | 4812126957 | Spacer sleeve | 2 | | | |
| 5 | 4812130136 | Bracket | 1 | | | |
| 6 | 4700921078 | Clamp | 2 | | | |
| 7 | 4700603010 | Washer 6,4x12x3 | 1 | | | |
| 8 | 4700500013 | Hexagon head screw M | 1 | | | |
| 9 | 4700904556 | Steel plain washer | 2 | | | |
| 10 | 4700500053 | Screw, M8x20 mm 8.8 A2K | 2 | | | |
| 11 | 4700904557 | Steel plain washer | 2 | | | |
| 12 | 4700904230 | Plain washer M10 10.5X22X2.0 | 2 | | | |
| 13 | 4700500030 | Hexagon screw M | 4 | | | |
| 14 | 4700747282 | Copper washer | 11 | | | |
| 15 | 4700901121 | Banjo nipple | 6 | | | |
| 16 | 4700330171 | Hollow screw | 4 | | | |
| 17 | 4812127370 | Hollow screw, M14 | 1 | | | |
| 18 | 4700904984 | Fuel hose | 0.663 M | | | |
| 19 | 4700904984 | Fuel hose | 0.90 M | | | |
| 20 | 4700904984 | Fuel hose | 0.447 M | | | |
| 21 | 4700904984 | Fuel hose | 0.671 M | | | |
| 22 | 4700904984 | Fuel hose | 0.0532 M | | | |
| 23 | 4700313041 | Cable tie | N | | | |
| 24 | 4700904984 | Fuel hose | 0.272 M | | | |
| 25 | 4700904984 | Fuel hose | 0.07 M | | | |
| 26 | 4700313075 | Hose clamp | 14 | | | |
| 27 | 4700541703 | Thread forming screw | 2 | | | |
| 28 | 4700792602 | Cable Tie with Holder, Nylon Black | 1 | | | |

**Engine room** Battery holder

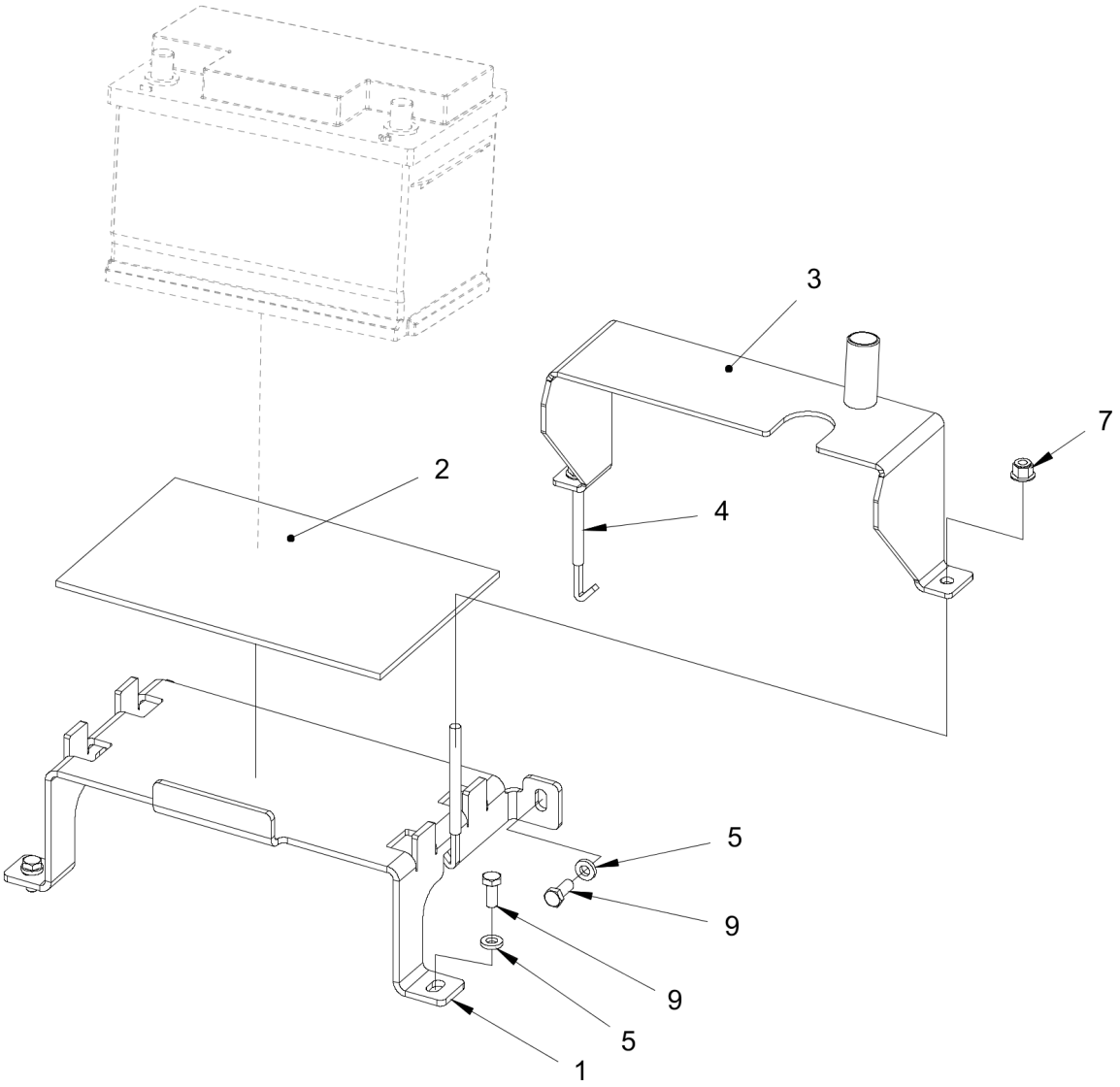

| Item | Part No. | Name | Qty | L | C | SN INFO |
|---|---|---|---|---|---|---|
| 1 | 4812126956 | Bracket | 1 | | | |
| 2 | 4812124988 | Rubber cloth | 1 | | | |
| 3 | 4812128404 | Bracket | 1 | | | |
| 4 | 4700379064 | Screw, M8 | 2 | | | |
| 5 | 4700904556 | Steel plain washer | 3 | | | |
| 7 | 4700902286 | Hexagon lock nut with flange M8 | 2 | | | |
| 9 | 4700500053 | Screw, M8x20 mm 8.8 A2K | 1 | | | |

**Engine room** Hydraulic oil tank

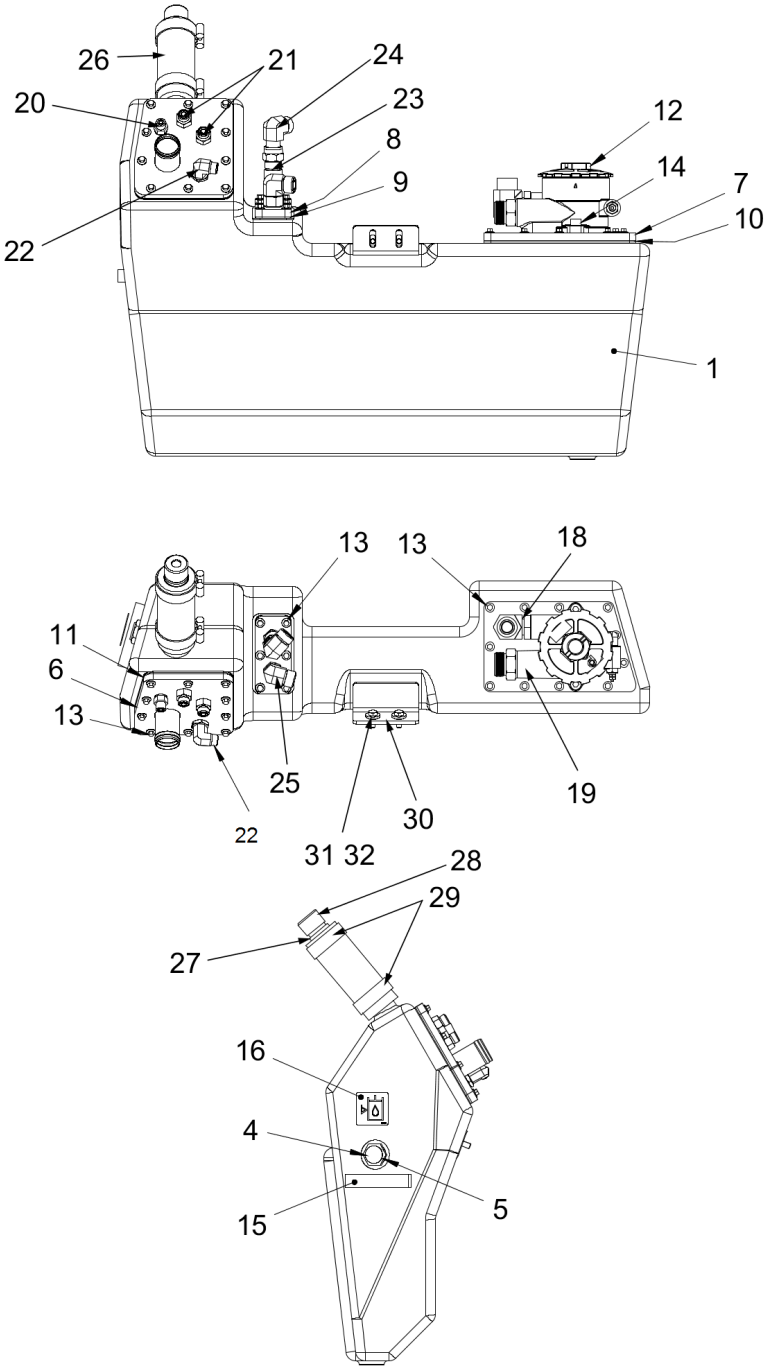

| Item | Part No. | Name | Qty | L | C | SN INFO |
|---|---|---|---|---|---|---|
| 1 | 4812125476 | Hydarulic oil tank | 1 | | | |
| 4 | 4700813443 | O-ring | 1 | | | |
| 5 | 4700791395 | Sight plug | 1 | | | |
| 6 | 4812125477 | Lid | 1 | | | |
| 7 | 4812125478 | Lid | 1 | | | |
| 8 | 4812125651 | Lid | 1 | | | |
| 9 | 4812125652 | Gasket | 1 | | | |
| 10 | 4812125479 | Gasket | 1 | | | |
| 11 | 4812125480 | Gasket | 1 | | | |
| 12 | 4812113327 | Hydraulic oil filter, cpl. | 1 | | | |
| 12 | 4812113328 | Hydraulic oil filter element | 1 | | | |
| 13 | 4700500501 | Hexagon screw with flange M | 27 | | | |
| 14 | 4700508028 | Screw, M10x20H | 2 | | | |
| 15 | 4700202041 | Rubber strip | 0,1 M | | | |
| 16 | 4700272373 | Decal, hydraulic oil level | 1 | | | |
| 18 | 4700791698 | Elbow connector 90 orfs | 1 | | | |
| 19 | 4700792338 | Straight connector ORFS | 1 | | | |
| 20 | 4700791914 | Adapter | 1 | | | |
| 21 | 4700791828 | Adapter | 2 | | | |
| 22 | 4700791840 | Adapter | 1 | | | |
| 23 | 4700791743 | Straight connector ORFS | 1 | | | |
| 24 | 4700904766 | Connector elbow 90 ORFS | 1 | | | |
| 25 | 4700791843 | Elbow 90, O-ring with swivel | 1 | | | |
| 26 | 4812119321 | Hydraulic hose | 1 | | | |
| 27 | 4700357139 | Connector | 1 | | | |
| 28 | 4700357138 | Ventilating filter | 1 | | | |
| 29 | 4700313126 | Clamp | 2 | | | |
| 30 | 4812125676 | Bracket | 1 | | | |
| 31 | 4700904640 | Steel plain washer | 2 | | | |
| 32 | 4700500053 | Screw, M8x20 mm 8.8 A2K | 2 | | | |

**Engine room** Belt guard

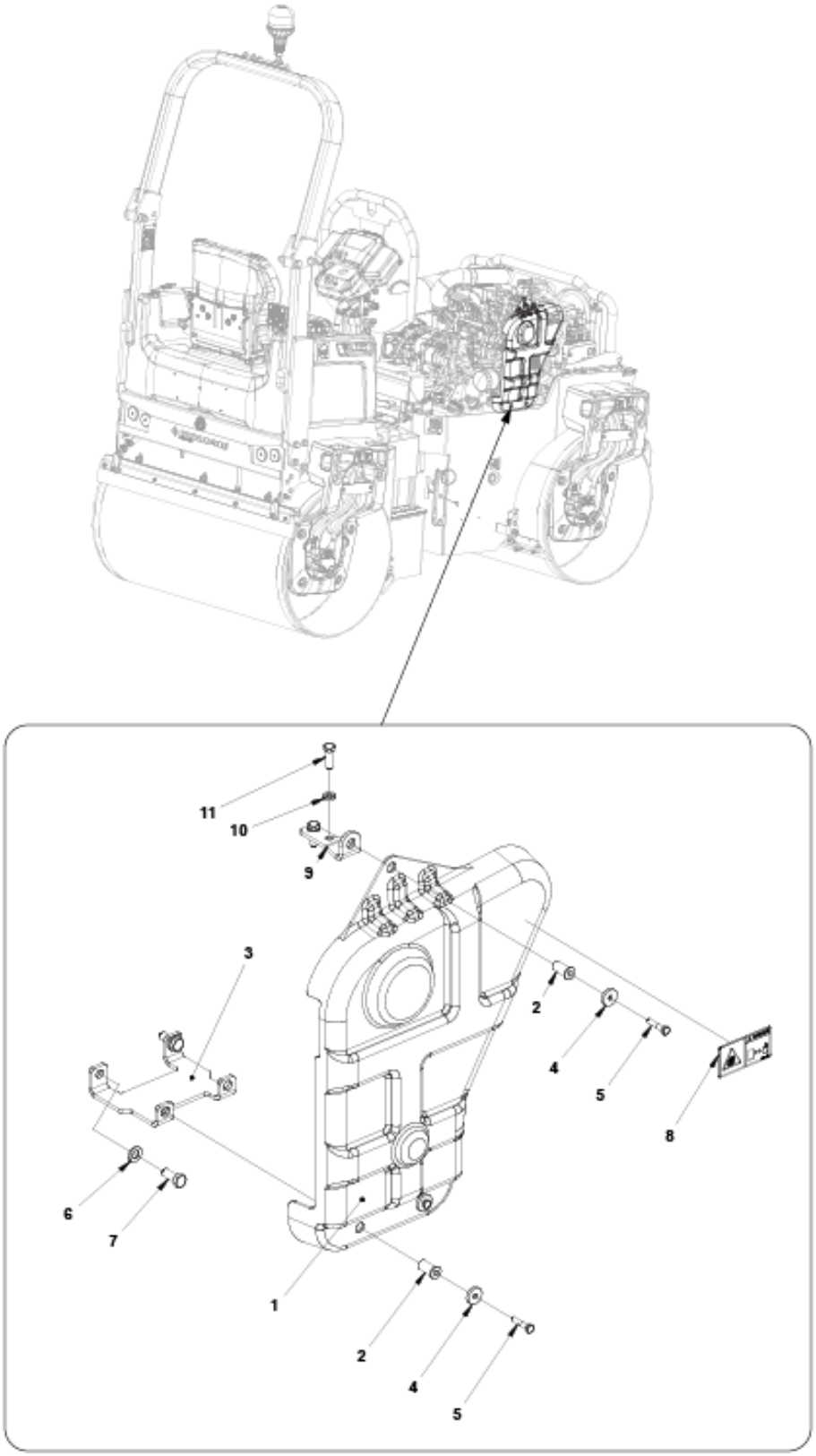

| Item | Part No. | Name | Qty | L | C | SN INFO |
|---|---|---|---|---|---|---|
| 1 | 4812125400 | Belt guard | 1 | | | |
| 2 | 4812125875 | Nut | 3 | | | |
| 3 | 4812125446 | Bracket | 1 | | | |
| 4 | 4700904735 | Steel plain washer | 3 | | | |
| 5 | 4700500015 | Hexagon head screw M | 3 | | | |
| 6 | 4812122654 | Steel plain washer | 2 | | | |
| 7 | 0147195903 | Screw DIN961 | 2 | | | |
| 8 | 4700903423 | Safety decal, Rotating engine components | 1 | | | |
| 9 | 4812128839 | Bracket | 1 | | | |
| 10 | 4700904229 | Steel plain washer 8.4X16X1.5 | 2 | | | |
| 11 | 4700500021 | Hexagon head screw M | 2 | | | |

**Engine room** Cooler module

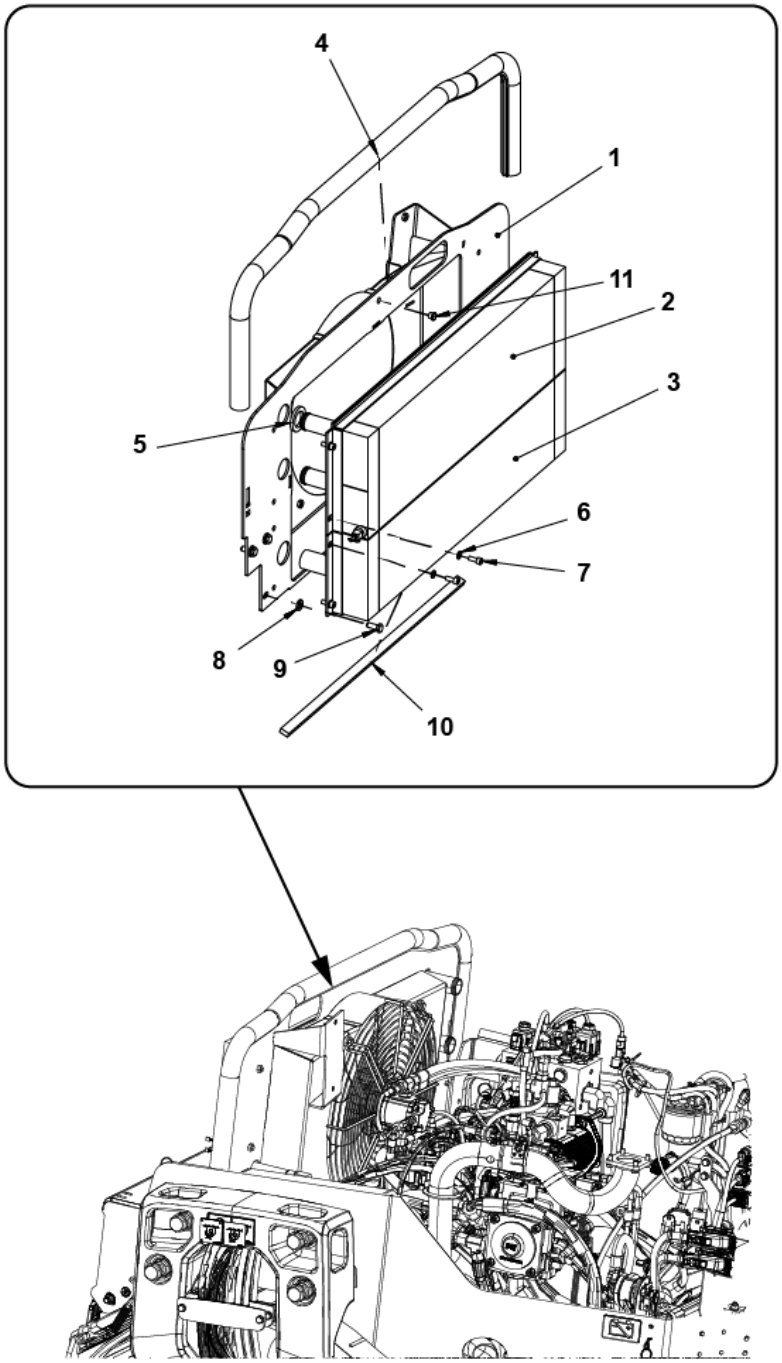

| Item | Part No. | Name | Qty | L | C | SN INFO |
|---|---|---|---|---|---|---|
| 1 | 4812128822 | Fan shroud | 1 | | | |
| 2 | 4812129022 | Water cooler | 1 | | | |
| 3 | 4812129023 | Hydraulic oil cooler | 1 | | | |
| 4 | 4812127643 | Edge trim | 1.595 M | | | |
| 5 | 4812126953 | Insulation | 4 | | | |
| 6 | 4700904229 | Steel plain washer 8.4X16X1.5 | 8 | | | |
| 7 | 4700508092 | Hexagon socket head cap screw M | 8 | | | |
| 8 | 4700904557 | Steel plain washer | 6 | | | |
| 9 | 4700500028 | Hexagon Screw M | 6 | | | |
| 10 | 4700202046 | Rubber strip 25x10 | 0.725 M | | | |
| 11 | 4700791424 | End plug | 1 | | | |

**Engine room** Coolant hoses

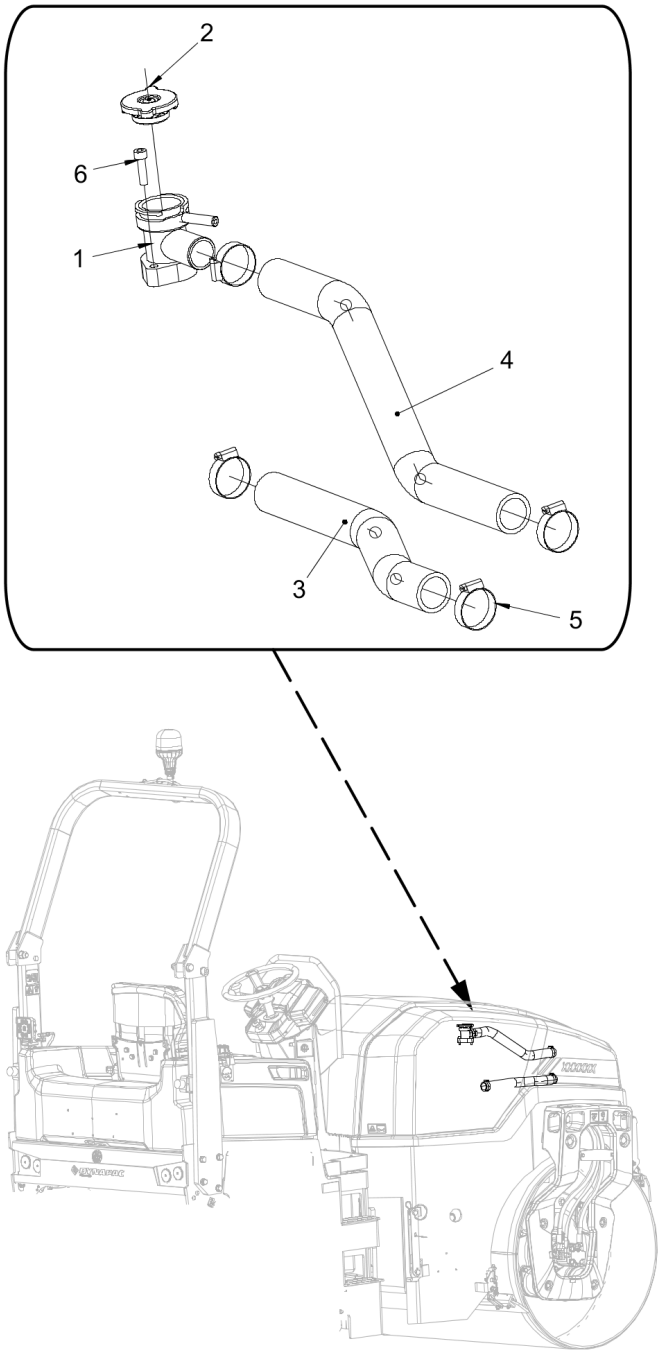

| Item | Part No. | Name | Qty | L | C | SN INFO |
|---|---|---|---|---|---|---|
| 1 | 4812129865 | Filling pipe | 1 | | | |
| 2 | 4812125508 | Cap | 1 | | | |
| 3 | 4812129864 | Coolant hose | 1 | | | |
| 4 | 4812129936 | Coolant ho | 1 | | | |
| 5 | 4700313007 | Hose clamp | 4 | | | |
| 6 | 4700508048 | Hexagon socket head cap screw M | 2 | | | |

**Engine room** Engine module

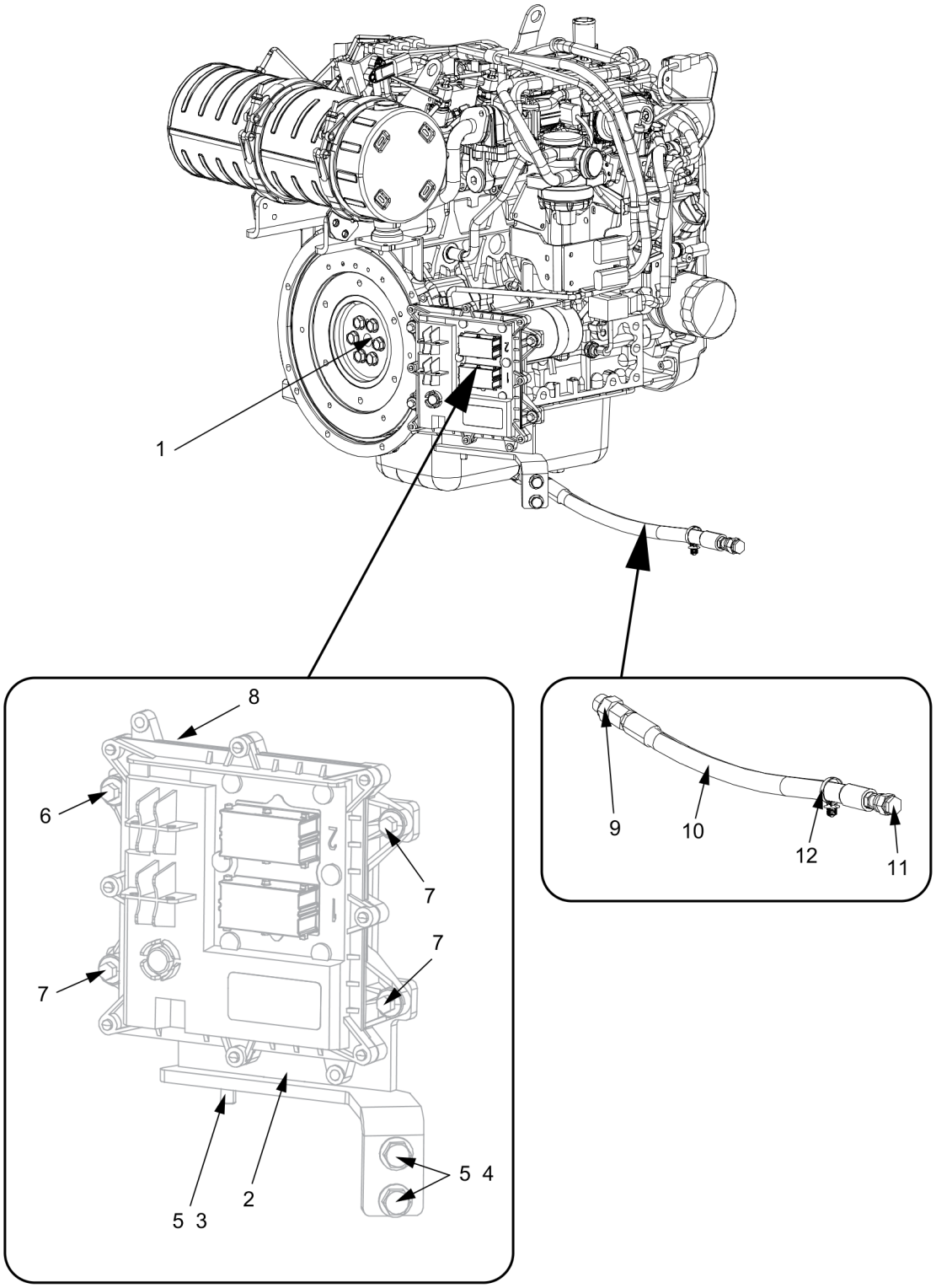

| Item | Part No. | Name | Qty | L | C | SN INFO |
|---|---|---|---|---|---|---|
| 1 | 4812128810 | Diesel engine, Kubota V2403-CR (Stage V) | 1 | | | |
| 2 | 4812129944 | Bracket | 1 | | | |
| 3 | 4700904557 | Steel plain washer | 1 | | | |
| 4 | 4700904230 | Plain washer M10 10.5X22X2.0 | 2 | | | |
| 5 | 4700500029 | Hexagon head screw M | 3 | | | |
| 6 | 4700500506 | Screw, M8x30 mm 8.8 A2K | 1 | | | |
| 7 | 4700500505 | Hexagon screw M8X20 8.8 A2K | 3 | | | |
| 8 | 4700570005 | Hexagon nut M | 1 | | | |
| 9 | 4700791635 | Straight connector | 1 | | | |
| 10 | 4812130660 | Hydraulic hose | 1 | | | |
| 11 | 4700791493 | Steel plug threaded | 1 | | | |
| 12 | 4700792602 | Cable Tie with Holder, Nylon Black | 1 | | | |

**Engine room** 4812128810_Diesel engine, Kubota V2403-CR (Stage V)

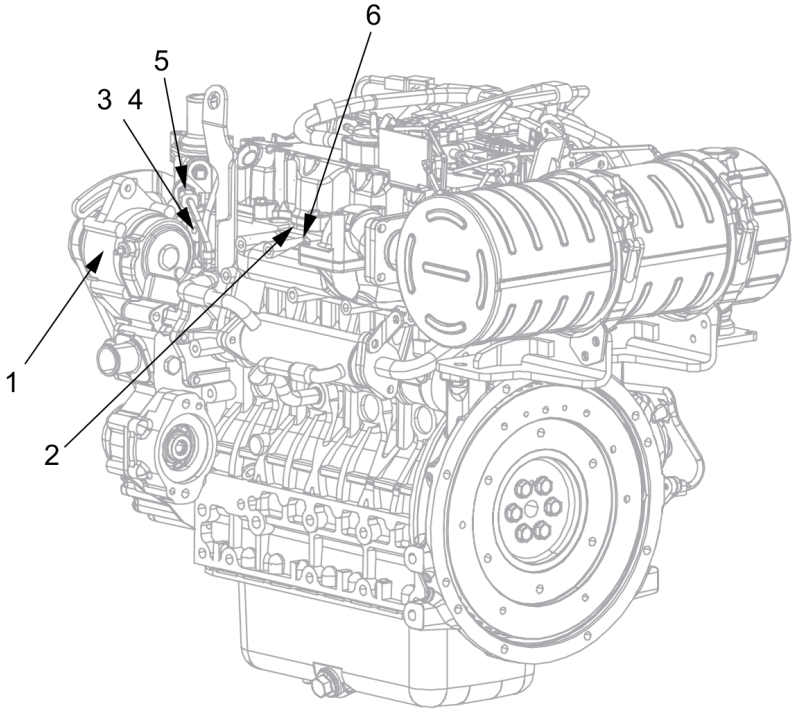


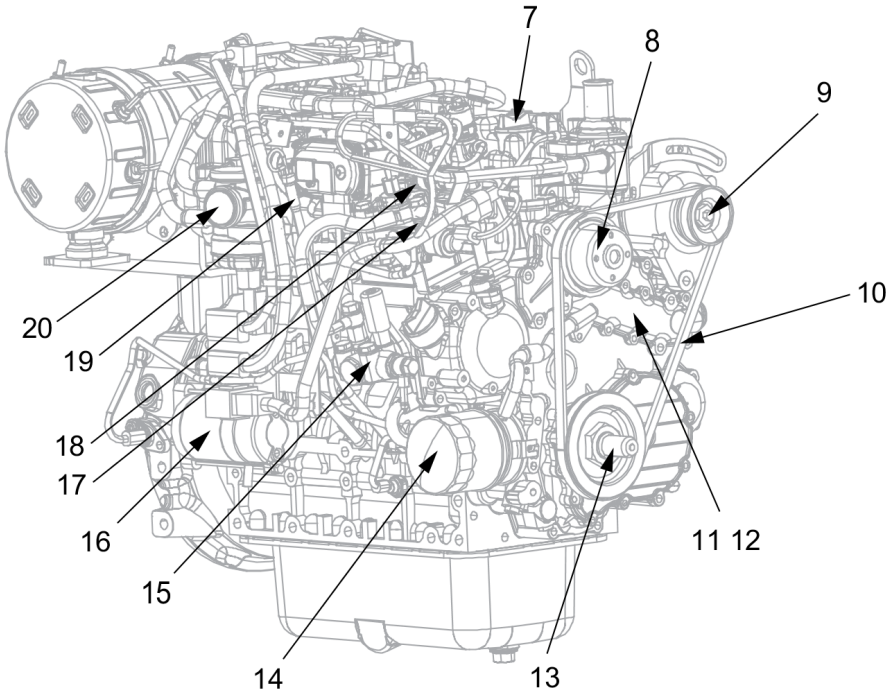


21
22
23
24
25
26
27
28

| Item | Part No. | Name | Qty | L | C | SN INFO |
|---|---|---|---|---|---|---|
| 0 | 4812128810 | Diesel engine, Kubota V2403-CR (Stage V) | 1 | | | |
| 1 | 4812163565 | Alternator | 1 | | | |
| 2 | 4812156262 | Valve cover gasket | 1 | | | |
| 3 | 4812161182 | Gasket, flange water | 1 | | | |
| 4 | 4812161258 | Thermostat | 1 | | | |
| 5 | 4812161187 | Sensor, water temp | 1 | | | |
| 6 | 4812163567 | Gasket, inside manifold | 1 | | | |
| 7 | 4812163564 | Oil cap | 1 | | | |
| 7-1 | 4812156359 | O-ring | 1 | | | |
| 8 | 4812156360 | Pulley, Fan | 1 | | | |
| 9 | 4812163570 | Pulley, Alternator | 1 | | | |
| 10 | 4812163569 | V-belt | 1 | | | |
| 11 | 4812161178 | Water pump | 1 | | | |
| 12 | 4812161180 | Gasket, water pump | 1 | | | |
| 13 | 4812156361 | Pulley, Fan | 1 | | | |
| 14 | 4812160480 | Engine oil filter element | 1 | | | |
| 15 | 4812160562 | Fuel pump | 1 | | | |
| 16 | 4812156354 | Starter | 1 | | | |
| 17 | 4812160561 | Supply pump | 1 | | | |
| 18 | 4812163566 | Gasket, exhaust manifold | 1 | | | |
| 19 | 4812160567 | Dip stick | 1 | | | |
| 20 | 4812159478 | Oil separator element | 1 | | | |
| 21 | 4812163568 | Oil pressure switch | 1 | | | |
| 22 | 4812162284 | Fuel filter, cpl. | 1 | | | |
| 23 | 4812161672 | Fuel filter element | 1 | | | |
| 24 | 4812161673 | Pre fuel filter, cpl. | 1 | | | |
| 24-1 | 4812159594 | Pre Fuel filter element | 1 | | | |
| 24-2 | 4812161562 | Sensor, water in fuel | 1 | | | |
| 25 | 4812163571 | Valve, inlet | 4 | | | |
| 26 | 4812163572 | Valve, Exhaust | 4 | | | |
| 27 | 4812160566 | Switch, oil | 1 | | | |
| 28 | 4812161177 | Gasket, inlet flange | 1 | | | |

**Engine room** Bracket module

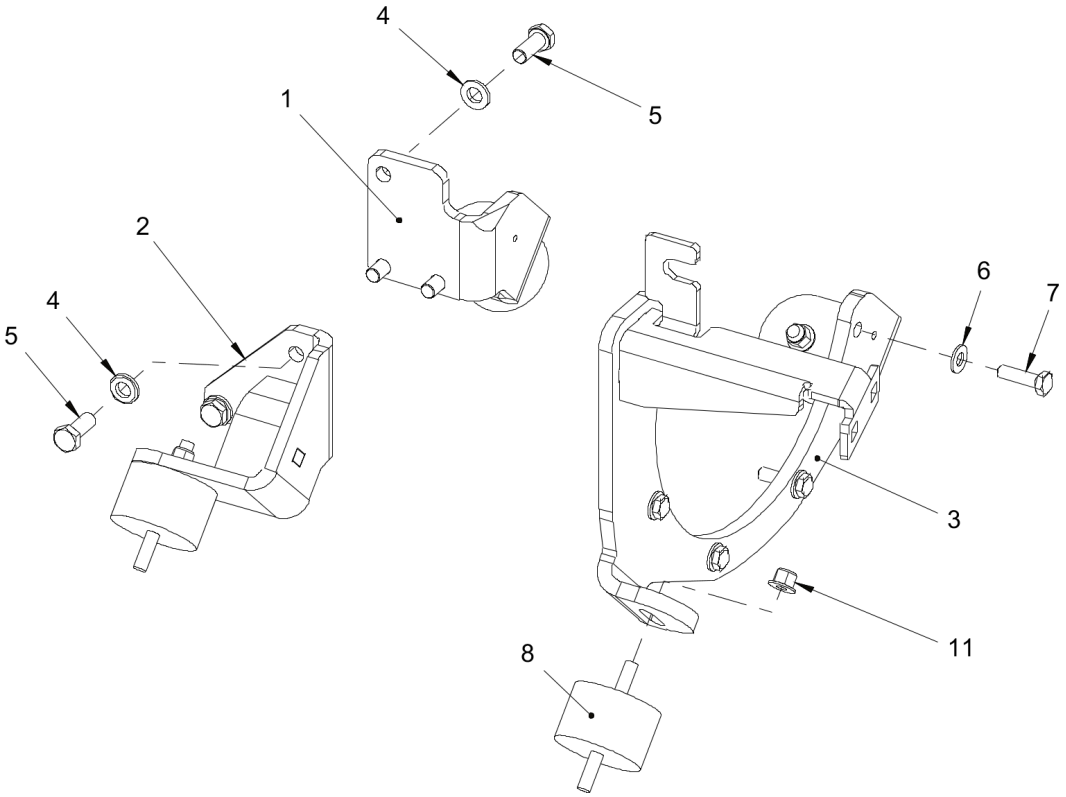

| Item | Part No. | Name | Qty | L | C | SN INFO |
|---|---|---|---|---|---|---|
| 1 | 4812125384 | Bracket | 1 | | | |
| 2 | 4812127327 | Bracket | 1 | | | |
| 3 | 4812125394 | Bracket | 1 | | | |
| 4 | 4700904703 | Plain washer 13x24x4 mm | 6 | | | |
| 5 | 4700792250 | Screw | 6 | | | |
| 6 | 4700904230 | Plain washer M10 10.5X22X2.0 | 5 | | | |
| 7 | 4700500030 | Hexagon screw M | 5 | | | |
| 8 | 4812125630 | Shock absorber | 4 | | | |
| 11 | 4700902287 | Nut, M10 | 4 | | | |

**Engine room** Coupling

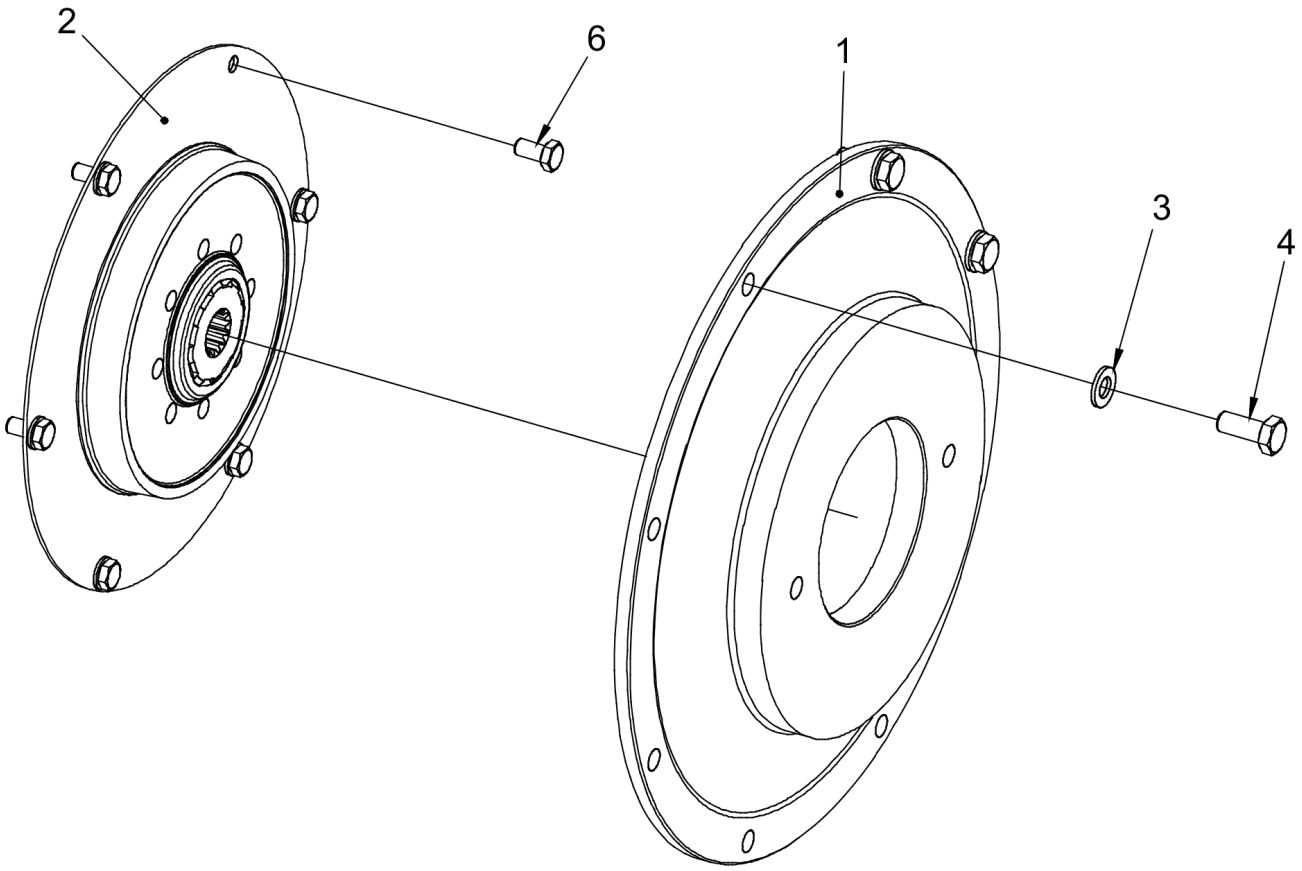

| Item | Part No. | Name | Qty | L | C | SN INFO |
|---|---|---|---|---|---|---|
| 1 | 4812122554 | Coupling | 1 | | | |
| 2 | 4812125794 | Bracket | 1 | | | |
| 3 | 4812122654 | Steel plain washer | 3 | | | |
| 4 | 4700500028 | Hexagon Screw M | 3 | | | |
| 6 | 4700500019 | Hexagon head screw M | 6 | | | |

**Hydraulic system** Cooler - Suction and return

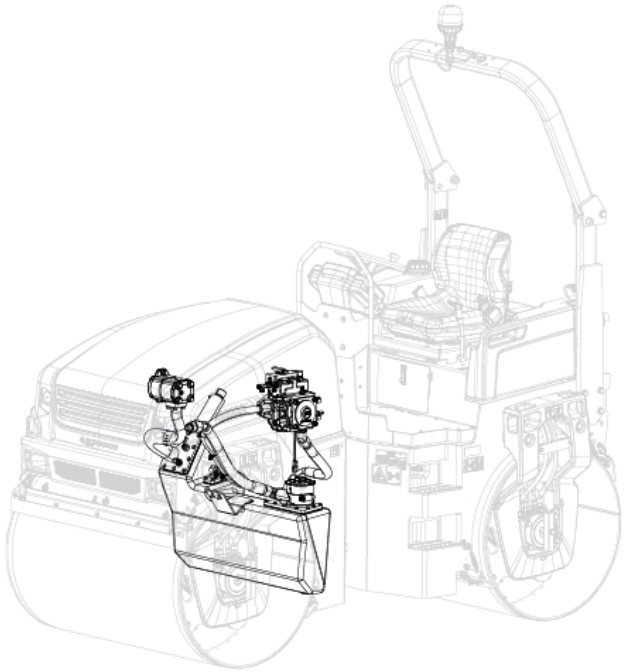

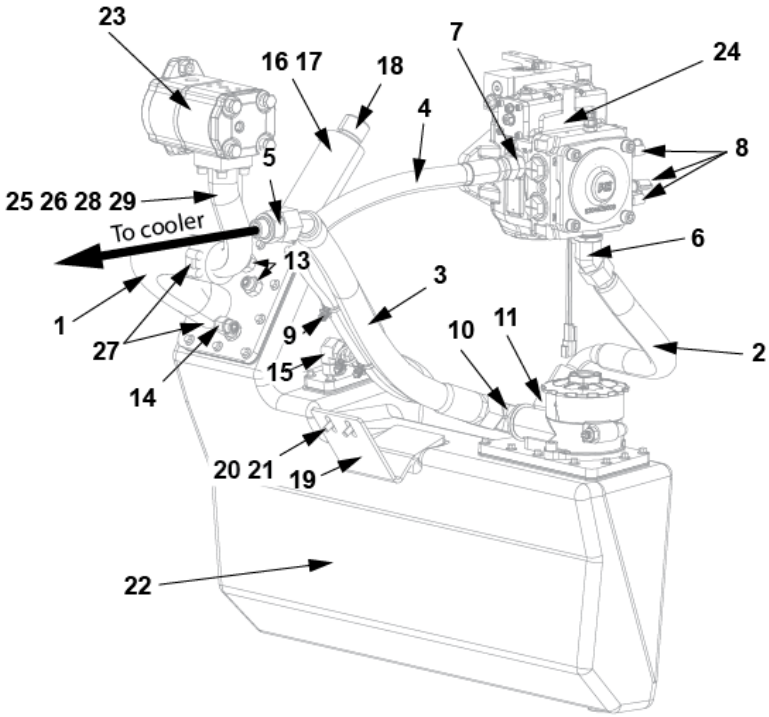

| Item | Part No. | Name | Qty | L | C | SN INFO |
|---|---|---|---|---|---|---|
| 1 | 4812131890 | Hydraulic hose | 1 | | | |
| 2 | 4812130498 | Hydraulic hose | 1 | | | |
| 3 | 4812130499 | Hydraulic hose | 1 | | | |
| 4 | 4812130500 | Hydraulic hose | 1 | | | |
| 5 | 4700791631 | Connector, G3⁄4 x 7⁄16 in. UNF | 1 | | | |
| 6 | 4700791808 | Elbow adapter 45 | 1 | | | |
| 7 | 4700792074 | Straight connector | 1 | | | |
| 8 | 4700923405 | Measuring fitting | 3 | | | |
| 9 | 4700792602 | Cable Tie with Holder, Nylon Black | 3 | | | |
| 10 | 4812117381 | Elbow connector 90 ORFS | 1 | | | |
| 11 | 4700791698 | Elbow connector 90 orfs | 1 | | | |
| 13 | 4700791828 | Adapter | 2 | | | |
| 14 | 4700791840 | Adapter | 1 | | | |
| 15 | 4700791843 | Elbow 90, O-ring with swivel | 1 | | | |
| 16 | 4812119321 | Hydraulic hose | 1 | | | |
| 17 | 4700357139 | Connector | 1 | | | |
| 18 | 4700357138 | Ventilating filter | 1 | | | |
| 19 | 4812130132 | Bracket | 1 | | | |
| 20 | 4700904640 | Steel plain washer | 2 | | | |
| 21 | 4700500053 | Screw, M8x20 mm 8.8 A2K | 2 | | | |
| 22 | - | Hydraulic oil tank, cpl. | 1 | | | |
| 23 | - | Drive unit | 1 | | | |
| 24 | - | Drive unit | 1 | | | |
| 25 | 4812125469 | Flange connector | 1 | | | |
| 26 | 4700160016 | O-ring | 1 | | | |
| 27 | 4700923378 | Hose clamp | 2 | | | |
| 28 | 4700904556 | Steel plain washer | 4 | | | |
| 29 | 4700508027 | Screw | 4 | | | |

**Vibration system** Vibration - fan and leak rear with access valve

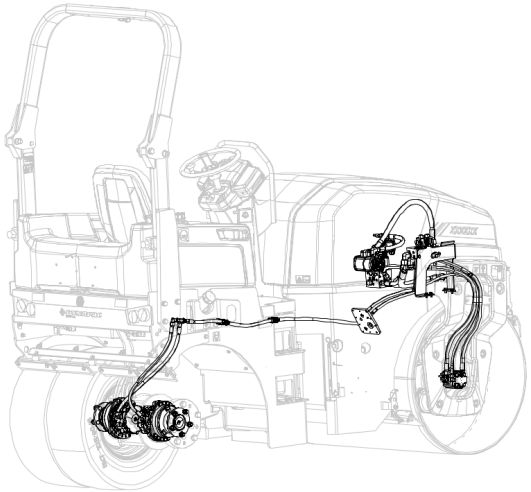

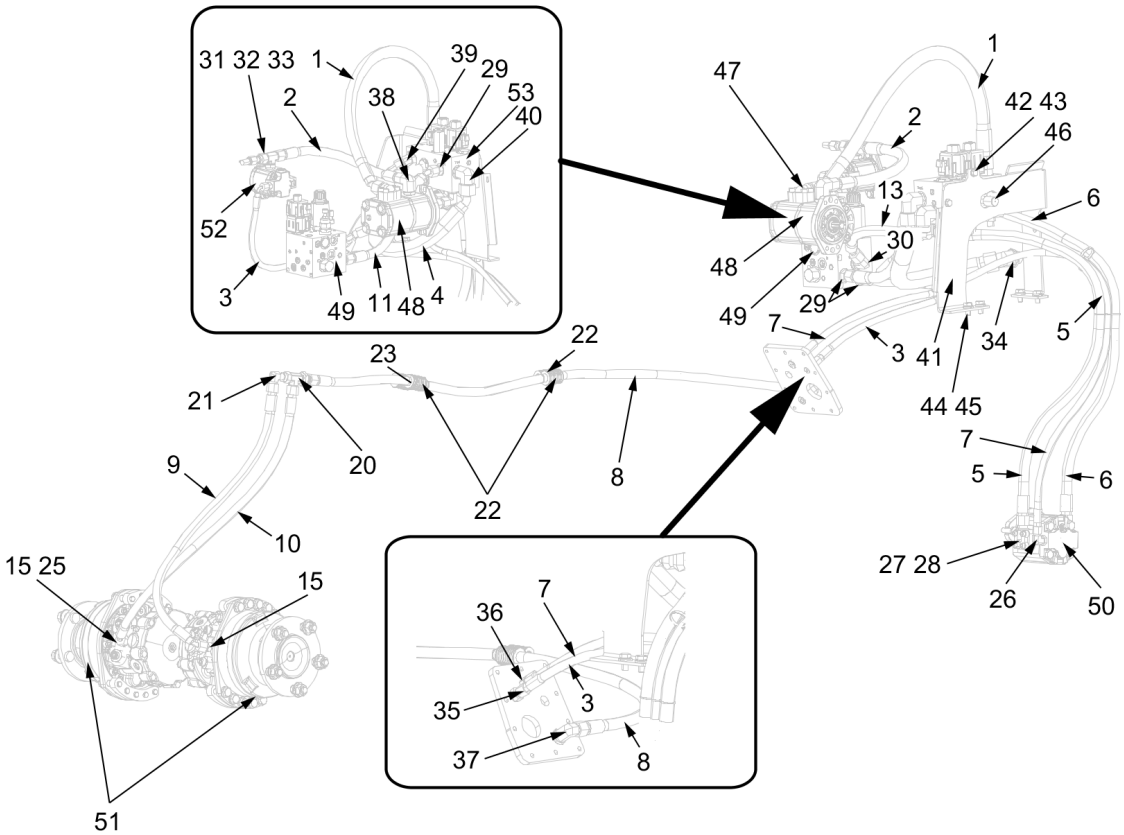

| Item | Part No. | Name | Qty | L | C | SN INFO |
|---|---|---|---|---|---|---|
| 1 | 4812130512 | Hydraulic hose | 1 | | | |
| 2 | 4812130513 | Hydraulic hose | 1 | | | |
| 3 | 4812130514 | Hydraulic hose | 1 | | | |
| 4 | 4812130515 | Hydraulic hose | 1 | | | |
| 5 | 4812130516 | Hydraulic hose | 1 | | | |
| 6 | 4812130517 | Hydraulic hose | 1 | | | |
| 7 | 4812130518 | Hydraulic hose | 1 | | | |
| 8 | 4812130610 | Hydraulic hose | 1 | | | |
| 9 | 4812130611 | Hydraulic hose | 1 | | | |
| 10 | 4812130612 | Hydraulic hose | 1 | | | |
| 11 | 4812130525 | Hydraulic hose | 1 | | | |
| 12 | 4812130525 | Hydraulic hose | 1 | | | |
| 13 | 4812130649 | Hydraulic hose | 1 | | | |
| 14 | 4700792159 | T-connector orfs | 1 | | | |
| 15 | 4700791409 | Straight connector ORFS | 2 | | | |
| 16 | 4700791547 | Straight connector orfs | 4 | | | |
| 17 | 4812126590 | Bulkhead union | 2 | | | |
| 18 | 4700791745 | Connector | 2 | | | |
| 19 | 4812126712 | Elbow 90 | 1 | | | |
| 20 | 4812114492 | Bulkhead union | 1 | | | |
| 21 | 4700791401 | Elbow 90, O-ring with swivel | 1 | | | |
| 22 | 4700396656 | Hose clamp | 3 | | | |
| 23 | 4700396655 | Hose clamp | 1 | | | |
| 25 | 4700791828 | Adapter | 1 | | | |
| 26 | 4700791397 | Connector | 1 | | | |
| 27 | 4812116872 | Flange fitting 90 | 2 | | | |
| 28 | 4700791322 | Screw, M6x35 mm 8.8 A2K | 8 | | | |
| 29 | 4700791799 | Straight connector ORFS | 3 | | | |
| 30 | 4700791841 | Connector elbow 90 ORFS | 1 | | | |
| 31 | 4812130466 | Tee-connector | 1 | | | |
| 32 | 4700792219 | Straight connector | 1 | | | |
| 33 | 4700923405 | Measuring fitting | 1 | | | |
| 34 | 4700791808 | Elbow adapter 45 | 1 | | | |
| 35 | 4700791914 | Adapter | 1 | | | |
| 36 | 4700791828 | Adapter | 2 | | | |

| Item | Part No. | Name | Qty | L | C | SN INFO |
|---|---|---|---|---|---|---|
| 37 | 4700791840 | Adapter | 1 | | | |
| 38 | 4700791699 | Adapter | 1 | | | |
| 39 | 4700791796 | Elbow 45, O-ring with swivel | 1 | | | |
| 40 | 4700791838 | Adapter | 1 | | | |
| 41 | 4812130130 | Bracket | 1 | | | |
| 42 | 4700904229 | Steel plain washer 8.4X16X1.5 | 2 | | | |
| 43 | 4700500053 | Screw, M8x20 mm 8.8 A2K | 2 | | | |
| 44 | 4700904557 | Steel plain washer | 4 | | | |
| 45 | 4700500048 | Hex. Head screw | 4 | | | |
| 46 | 4700900229 | Measuring fitting | 1 | | | |
| 47 | 4812113633 | Flange connector | 1 | | | |
| 48 | - | Hydraulic motor | 1 | | | |
| 49 | - | Drive unit | 1 | | | |
| 50 | 4812132135 | Hydraulic motor | 1 | | | |
| 51 | 4812130731 | Hydraulic motor | 2 | | | |
| 52 | - | Drive unit | 1 | | | |
| 53 | - | Hydraulic valve | 1 | | | |

**Vibration system** Vibration - fan and leak rear without access valve

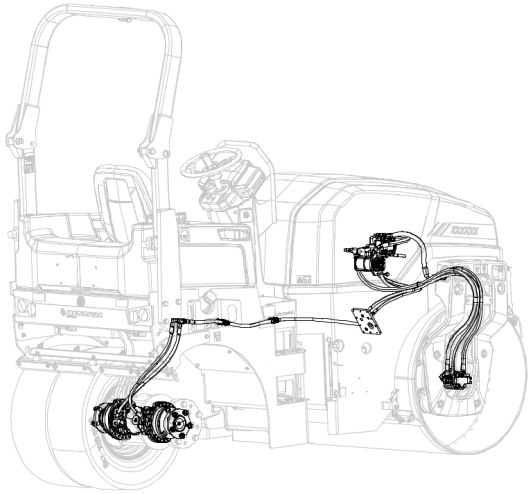

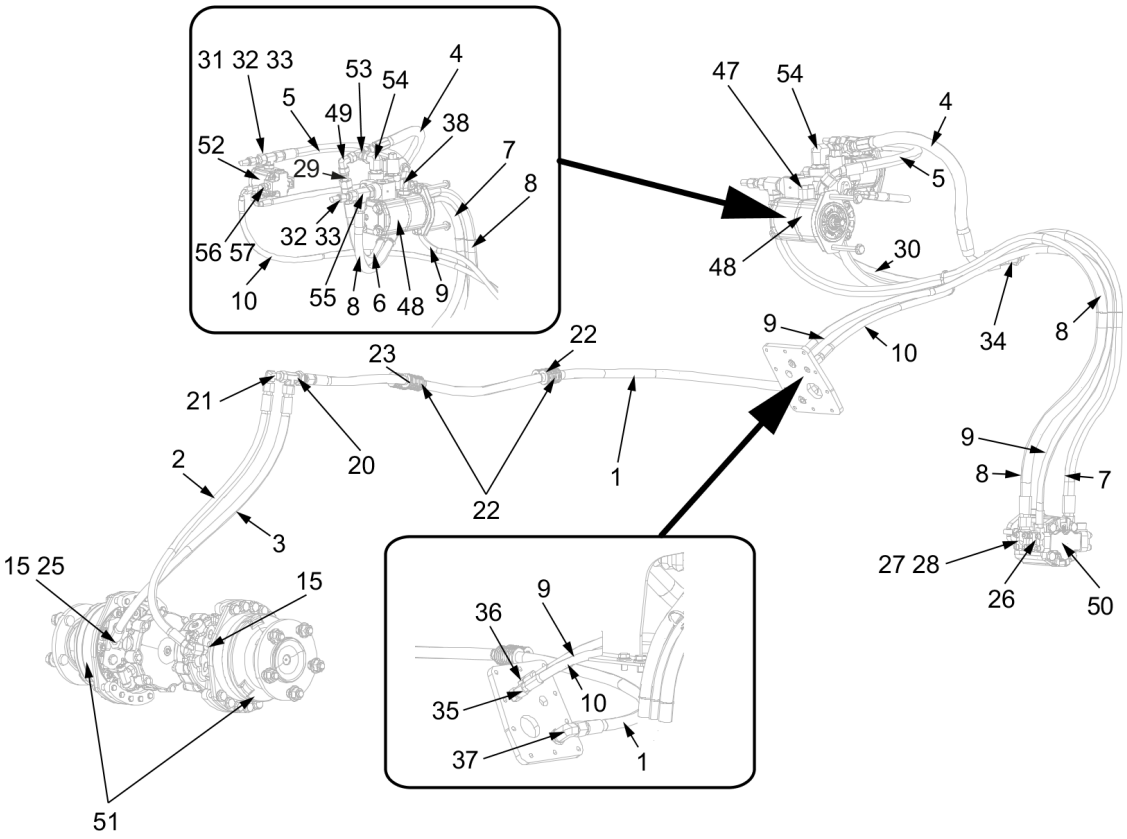

| Item | Part No. | Name | Qty | L | C | SN INFO |
|---|---|---|---|---|---|---|
| 1 | 4812130610 | Hydraulic hose | 1 | | | |
| 2 | 4812130611 | Hydraulic hose | 1 | | | |
| 3 | 4812130612 | Hydraulic hose | 1 | | | |
| 4 | 4812130613 | Hydraulic hose | 1 | | | |
| 5 | 4812130614 | Hydraulic hose | 1 | | | |
| 6 | 4812130615 | Hydraulic hose | 1 | | | |
| 7 | 4812130616 | Hydraulic hose | 1 | | | |
| 8 | 4812130617 | Hydraulic hose | 1 | | | |
| 9 | 4812130518 | Hydraulic hose | 1 | | | |
| 10 | 4812130514 | Hydraulic hose | 1 | | | |
| 12 | 4812130525 | Hydraulic hose | 1 | | | |
| 14 | 4700792159 | T-connector orfs | 1 | | | |
| 15 | 4700791409 | Straight connector ORFS | 2 | | | |
| 16 | 4700791547 | Straight connector orfs | 4 | | | |
| 17 | 4812126590 | Bulkhead union | 2 | | | |
| 18 | 4700791745 | Connector | 2 | | | |
| 19 | 4812126712 | Elbow 90 | 1 | | | |
| 20 | 4812114492 | Bulkhead union | 1 | | | |
| 21 | 4700791401 | Elbow 90, O-ring with swivel | 1 | | | |
| 22 | 4700396656 | Hose clamp | 3 | | | |
| 23 | 4700396655 | Hose clamp | 1 | | | |
| 25 | 4700791828 | Adapter | 1 | | | |
| 26 | 4700791397 | Connector | 1 | | | |
| 27 | 4812116872 | Flange fitting 90 | 2 | | | |
| 28 | 4700791322 | Screw, M6x35 mm 8.8 A2K | 8 | | | |
| 29 | 4812132218 | Check valve | 1 | | | |
| 30 | 4700791841 | Connector elbow 90 ORFS | 1 | | | |
| 31 | 4812130466 | Tee-connector | 1 | | | |
| 32 | 4700792219 | Straight connector | 1 | | | |
| 33 | 4700923405 | Measuring fitting | 1 | | | |
| 34 | 4700791808 | Elbow adapter 45 | 1 | | | |
| 35 | 4700791914 | Adapter | 1 | | | |
| 36 | 4700791828 | Adapter | 2 | | | |
| 37 | 4700791840 | Adapter | 1 | | | |
| 38 | 4812279136 | Connector elbow | 1 | | | |

| Item | Part No. | Name | Qty | L | C | SN INFO |
|---|---|---|---|---|---|---|
| 39 | 4700791796 | Elbow 45, O-ring with swivel | 1 | | | |
| 47 | 4812113633 | Flange connector | 1 | | | |
| 48 | - | Hydraulic motor | 1 | | | |
| 49 | 4700791745 | Connector | 1 | | | |
| 50 | 4812132135 | Hydraulic motor | 1 | | | |
| 51 | 4812130731 | Hydraulic motor | 2 | | | |
| 52 | - | Drive unit | 1 | | | |
| 53 | 4700791797 | Tee-connector orfs | 1 | | | |
| 54 | 4700791699 | Adapter | 1 | | | |
| 55 | 4700791792 | Tee-connector | 1 | | | |
| 56 | 4812121239 | T-Connector | 1 | | | |
| 57 | 4700791744 | Adapter | 1 | | | |

**Vibration system** Vibration - fan and leak rear

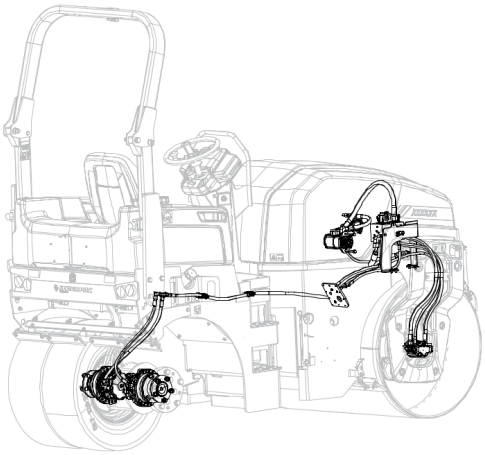

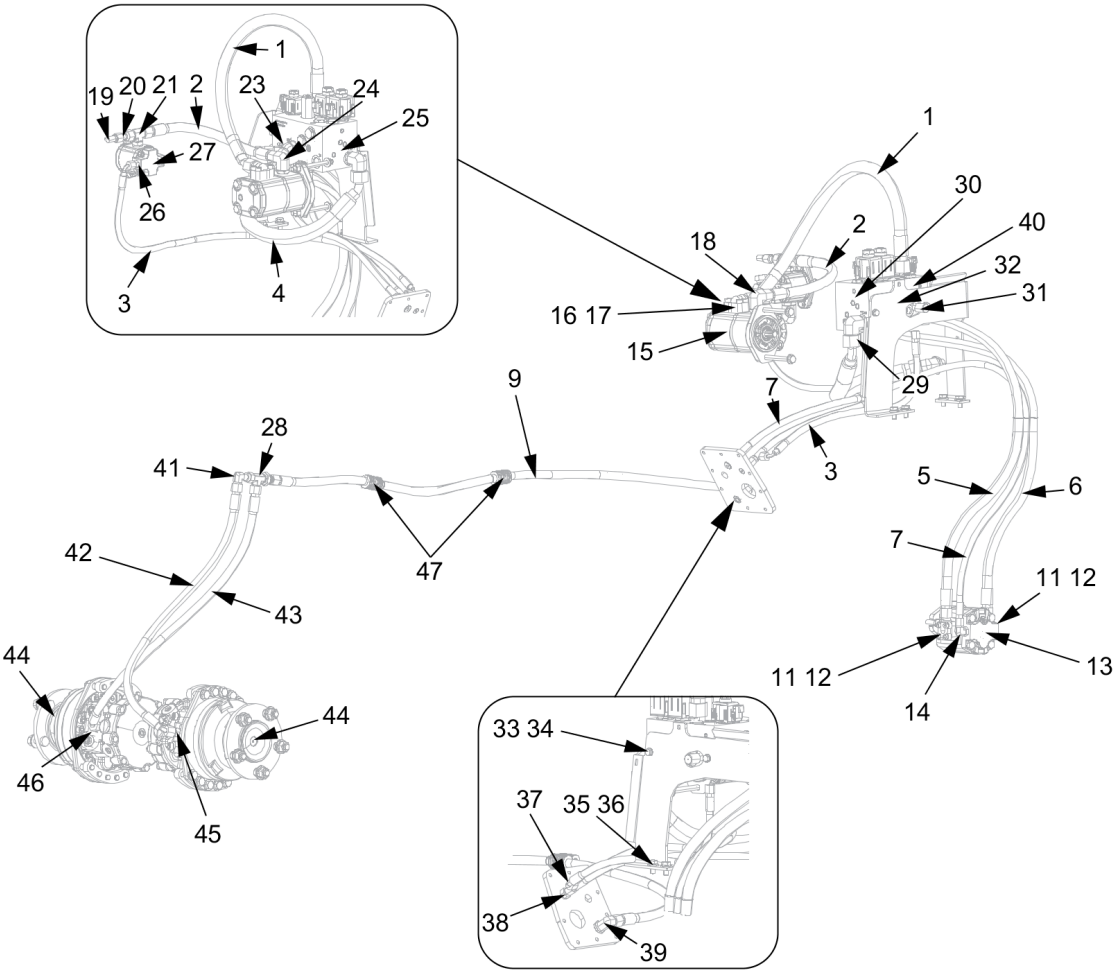

| Item | Part No. | Name | Qty | L | C | SN INFO |
|---|---|---|---|---|---|---|
| 1 | 4812130512 | Hydraulic hose | 1 | | | |
| 2 | 4812130513 | Hydraulic hose | 1 | | | |
| 3 | 4812130514 | Hydraulic hose | 1 | | | |
| 4 | 4812130747 | Hydraulic hose | 1 | | | |
| 5 | 4812130744 | Hydraulic hose | 0,495 | | | |
| 6 | 4812130728 | Hydraulic hose | 0,495 | | | |
| 7 | 4812130518 | Hydraulic hose | 0,49 | | | |
| 9 | 4812130610 | Hydraulic hose | 1 | | | |
| 10 | 4812130728 | Hydraulic hose | 0,495 | | | |
| 11 | 4812116872 | Flange fitting 90 | 4 | | | |
| 12 | 4700791322 | Screw, M6x35 mm 8.8 A2K | 16 | | | |
| 13 | 4812132135 | Hydraulic motor | 2 | | | |
| 14 | 4700791397 | Connector | 1 | | | |
| 15 | 4812130114 | Hydraulic pump | 1 | | | |
| 15-2 | 4700379458 | Gasket | 1 | | | |
| 15-3 | 4700500078 | Hex. screw | 2 | | | |
| 15-4 | 4700904230 | Plain washer M10 10.5X22X2.0 | 2 | | | |
| 15-5 | 4700902287 | Nut, M10 | 2 | | | |
| 16 | 4812113633 | Flange connector | 1 | | | |
| 17 | 4700508027 | Screw | 4 | | | |
| 18 | 4700791699 | Adapter | 1 | | | |
| 19 | 4700923405 | Measuring fitting | 1 | | | |
| 20 | 4700792219 | Straight connector | 1 | | | |
| 21 | 4812130466 | Tee-connector | 1 | | | |
| 23 | 4700791796 | Elbow 45, O-ring with swivel | 2 | | | |
| 24 | 4700791699 | Adapter | 1 | | | |
| 25 | 4700791838 | Adapter | 1 | | | |
| 26 | 4700791744 | Adapter | 1 | | | |
| 27 | 4812125795 | Hydraulic motor | 1 | | | |
| 28 | 4812114492 | Bulkhead union | 1 | | | |
| 29 | 4700791841 | Connector elbow 90 ORFS | 1 | | | |
| 30 | 4812130120 | Hydraulic valve | 1 | | | |
| 31 | 4700900229 | Measuring fitting | 1 | | | |

| Item | Part No. | Name | Qty | L | C | SN INFO |
|---|---|---|---|---|---|---|
| 32 | 4812130130 | Bracket | 1 | | | |
| 33 | 4700500053 | Screw, M8x20 mm 8.8 A2K | 2 | | | |
| 34 | 4700904229 | Steel plain washer 8.4X16X1.5 | 2 | | | |
| 35 | 4700500048 | Hex. Head screw | 4 | | | |
| 36 | 4700904557 | Steel plain washer | 4 | | | |
| 37 | 4700791828 | Adapter | 1 | | | |
| 38 | 4700791914 | Adapter | 1 | | | |
| 39 | 4700791840 | Adapter | 1 | | | |
| 40 | 4700791743 | Straight connector ORFS | 1 | | | |
| 41 | 4700791401 | Elbow 90, O-ring with swivel | 1 | | | |
| 42 | 4812130611 | Hydraulic hose | 1 | | | |
| 43 | 4812130612 | Hydraulic hose | 1 | | | |
| 44 | 4812130731 | Hydraulic motor | 2 | | | |
| 45 | 4700791409 | Straight connector ORFS | 1 | | | |
| 46 | 4700791828 | Adapter | 1 | | | |
| 47 | 4700396656 | Hose clamp | 2 | | | |

**Vibration system** 4812125795 Hydraulic motor

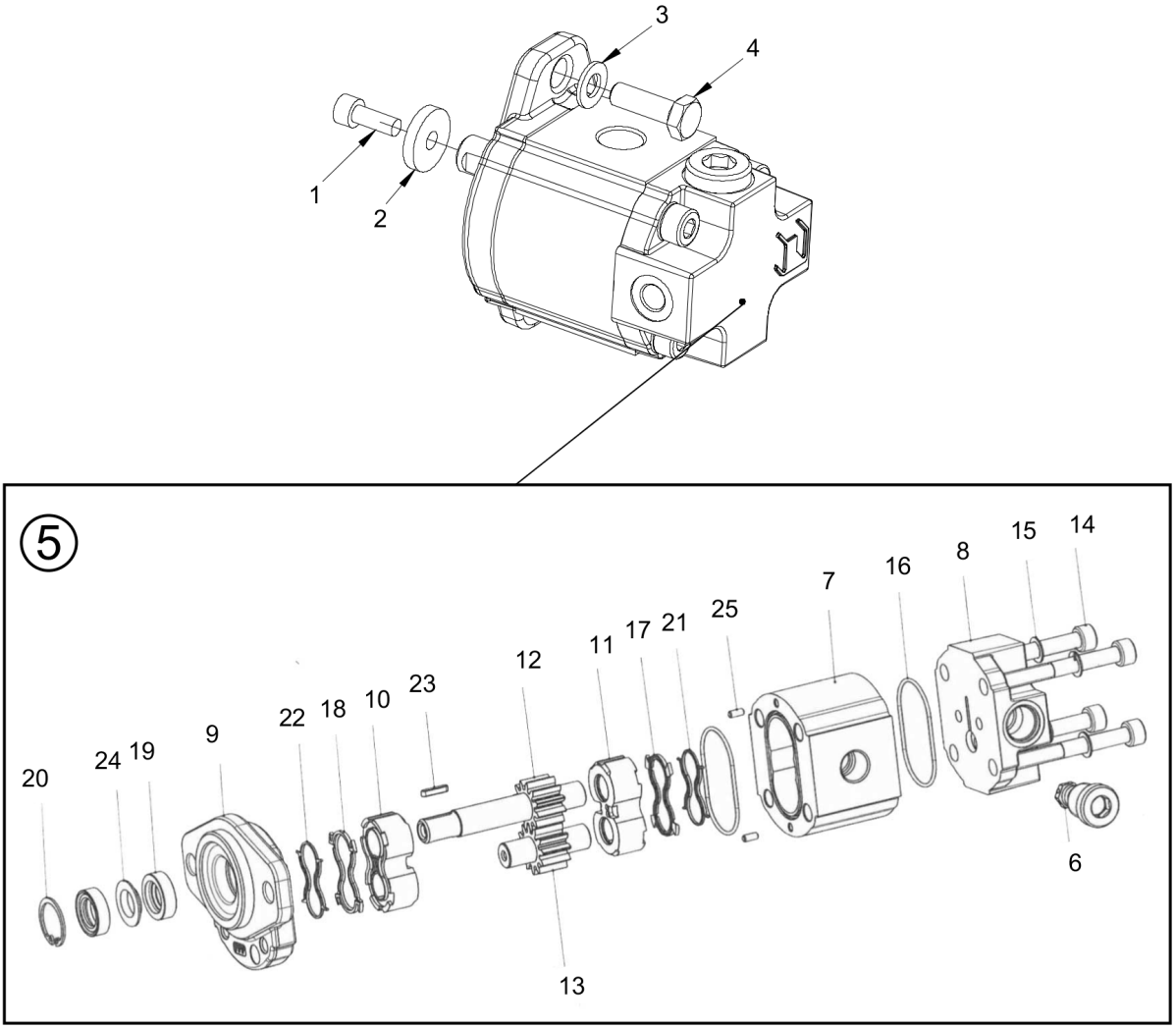

| Item | Part No. | Name | Qty | L | C | SN INFO |
|---|---|---|---|---|---|---|
| 1 | 4700508002 | Hexagon socket head cap screw M | 1 | | | |
| 2 | 4700904735 | Steel plain washer | 1 | | | |
| 3 | 4700904229 | Steel plain washer 8.4X16X1.5 | 2 | | | |
| 4 | 4700500021 | Hexagon head screw M | 2 | | | |
| 5 | 4812125795 | Hydraulic motor | 1 | | | |
| 6 | - | Valve | 1 | | | |
| 7 | - | House | 1 | | | |
| 8 | - | Cover, rear | 1 | | | |
| 9 | - | Cover, front | 1 | | | |
| 10 | - | Plate | 1 | | | |
| 11 | - | Plate | 1 | | | |
| 12 | - | Shaft | 1 | | | |
| 13 | - | Gear | 1 | | | |
| 14 | - | Screw, M8x70 | 4 | | | |
| 15 | - | Back-up washer | 4 | | | |
| 16 | - | O-ring | 2 | | | |
| 17 | - | Repair Kit | 1 | | | |
| 18 | - | Repair Kit | 1 | | | |
| 19 | 4812163480 | Shaft seal | 2 | | | |
| 20 | - | RING | 1 | | | |
| 21 | - | Anti-extrusion | 1 | | | |
| 22 | - | Anti-extrusion | 1 | | | |
| 23 | - | Key | 1 | | | |
| 24 | - | Back-up washer | 1 | | | |
| 25 | - | Pin | 2 | | | |

**Vibration system** 4812132135 Hydraulic motor

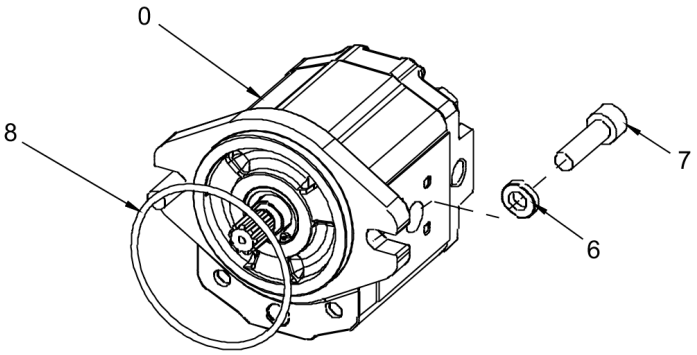


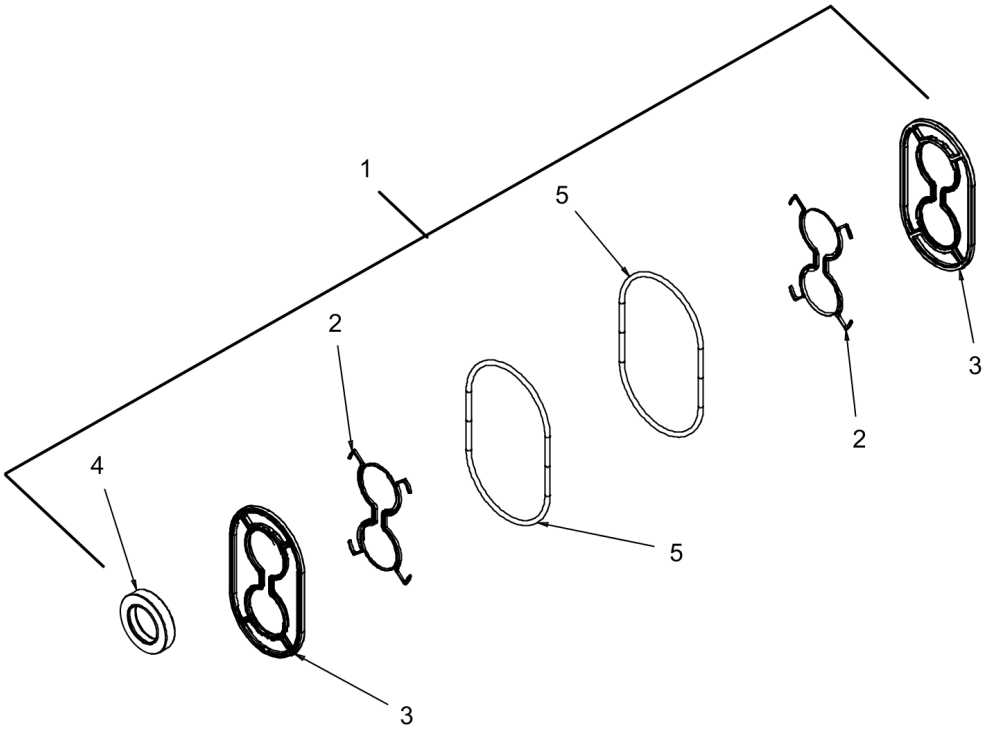

| Item | Part No. | Name | Qty | L | C | SN INFO |
|---|---|---|---|---|---|---|
| 0 | 4812132135 | Hydraulic motor | 1 | | | |
| 1 | - | Seal kit | 1 | | | |
| 2 | - | Backing ring | 2 | | | |
| 3 | - | Pressure seal | 2 | | | |
| 4 | - | Shaft seal | 1 | | | |
| 5 | - | O-ring | 2 | | | |
| 6 | 4700603018 | Washer 10x18x4 | 2 | | | |
| 7 | 4700508053 | Hexagon socket head cap screw M | 2 | | | |
| 8 | 4700160031 | O-ring | 1 | | | |

**Vibration system** 4812130114 Hydraulic pump

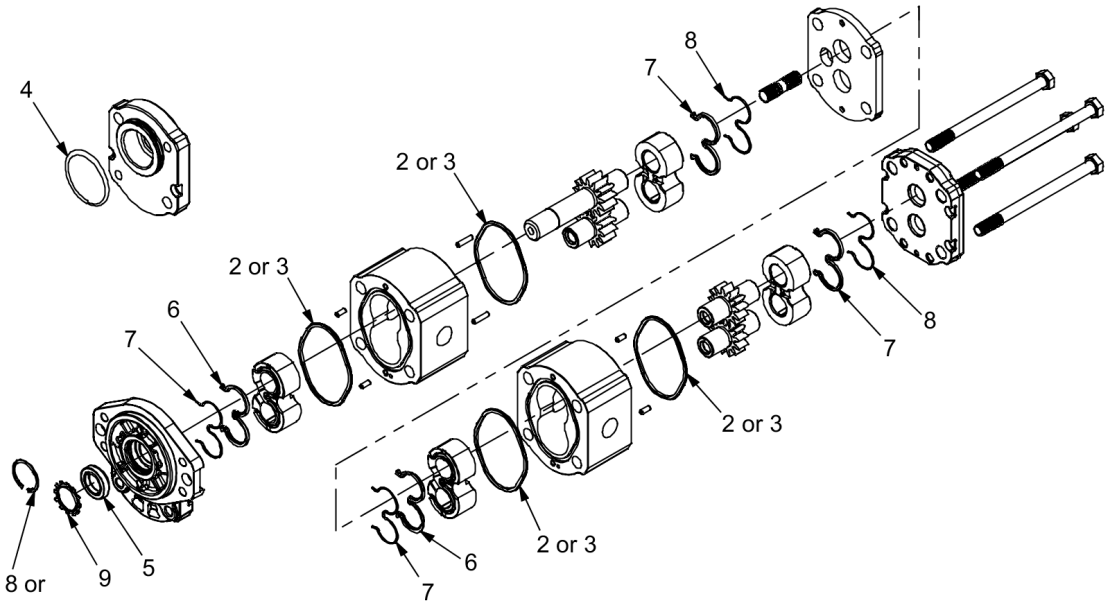

| Item | Part No. | Name | Qty | L | C | SN INFO |
|---|---|---|---|---|---|---|
| 0 | 4812130114 | Hydraulic pump | 1 | | | |
| 1 | 4812160796 | Seal kit | 1 | | | |
| 2 | - | O-ring | 4 | | | |
| 3 | - | O-ring | 4 | | | |
| 4 | - | O-ring | 1 | | | |
| 5 | - | Shaft seal | 1 | | | |
| 6 | - | Seal | 4 | | | |
| 7 | - | Snap-ring | 1 | | | |
| 8 | - | Toothed ring | 1 | | | |

**Propulsion system** Propulsion - Brake system

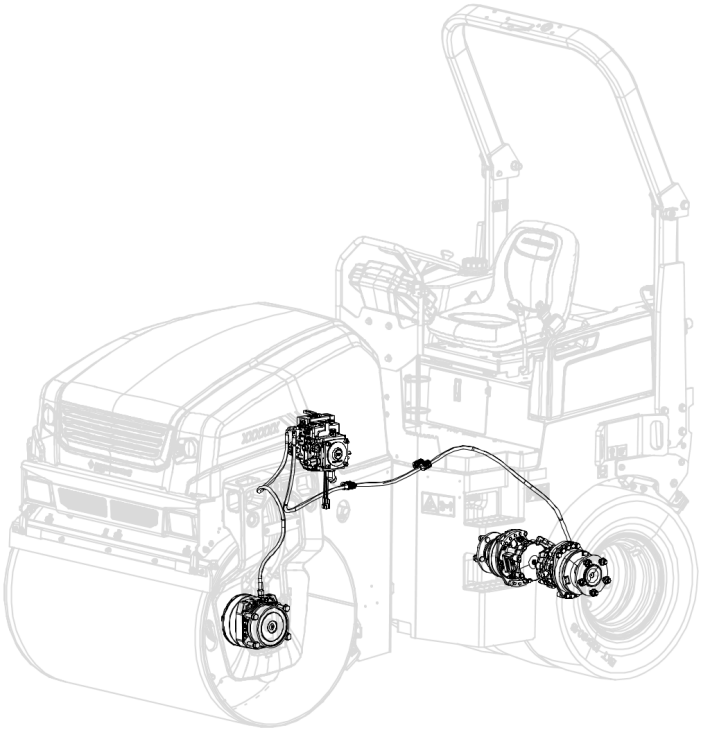

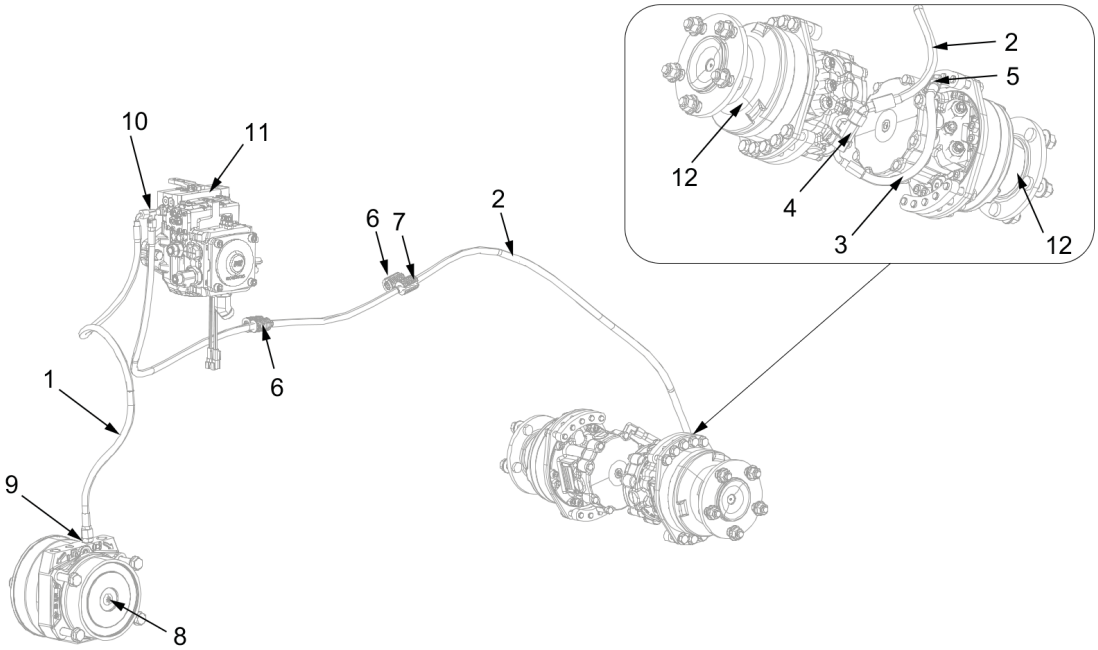

| Item | Part No. | Name | Qty | L | C | SN INFO |
|---|---|---|---|---|---|---|
| 1 | 4812130555 | Hydraulic hose | 1 | | | |
| 2 | 4812130626 | Hydraulic hose | 1 | | | |
| 3 | 4812126737 | Hydraulic hose | 1 | | | |
| 4 | 4812126712 | Elbow 90 | 1 | | | |
| 5 | 4700792159 | T-connector orfs | 1 | | | |
| 6 | 4700396656 | Hose clamp | 3 | | | |
| 7 | 4700396655 | Hose clamp | 1 | | | |
| 8 | 4812128854 | Hydraulic motor module | 1 | | | |
| 9 | 4700791535 | Straight connector | 1 | | | |
| 10 | 4812121329 | Control | 1 | | | |
| 11 | 4812130110 | Hydraulic pump module | 1 | | | |
| 12 | 4812130731 | Hydraulic motor | 2 | | | |
| 12-1 | 4812110490 | Holder | 2 | | | |
| 12-2 | 4700904231 | Steel plain washer | 10 | | | |
| 12-3 | 4700904386 | Hexagon head cap screw | 10 | | | |

**Propulsion system** Propulsion and leak front

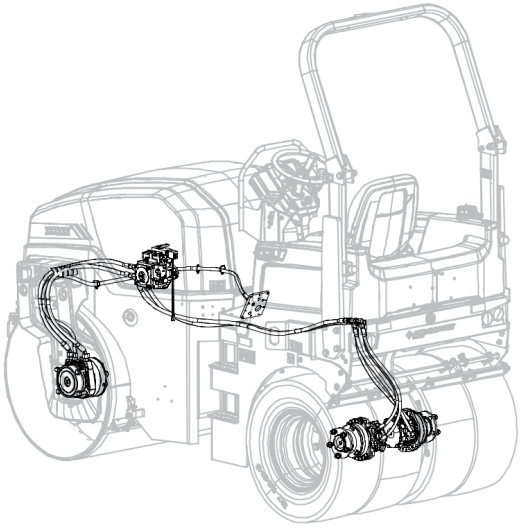

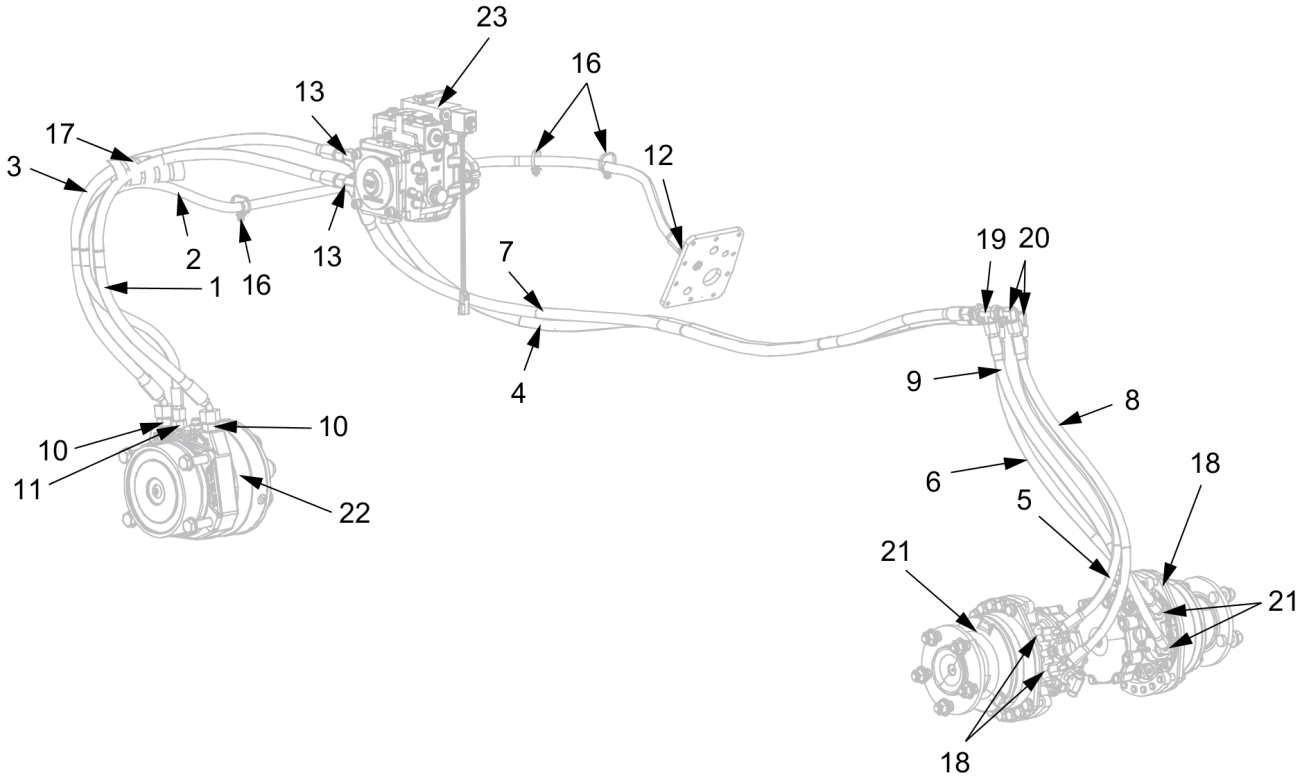

| Item | Part No. | Name | Qty | L | C | SN INFO |
|---|---|---|---|---|---|---|
| 1 | 4812130501 | Hydraulic hose | 1 | | | |
| 2 | 4812130503 | Hydraulic hose | 1 | | | |
| 3 | 4812130505 | Hydraulic hose | 1 | | | |
| 4 | 4812130619 | Hydraulic hose | 1 | | | |
| 5 | 4812130620 | Hydraulic hose | 1 | | | |
| 6 | 4812130620 | Hydraulic hose | 1 | | | |
| 7 | 4812130621 | Hydraulic hose | 1 | | | |
| 8 | 4812130622 | Hydraulic hose | 1 | | | |
| 9 | 4812130622 | Hydraulic hose | 1 | | | |
| 10 | 4700904641 | Straight connector orfs | 2 | | | |
| 11 | 4700791412 | Straight o-ring connector | 1 | | | |
| 12 | 4700791828 | Adapter | 2 | | | |
| 13 | 4812127214 | Tee-connector | 2 | | | |
| 15 | 4700923405 | Measuring fitting | 3 | | | |
| 16 | 4700792602 | Cable Tie with Holder, Nylon Black | 6 | | | |
| 17 | 4700904623 | Hose guard | 0,15 | | | |
| 18 | 4700791547 | Straight connector orfs | 4 | | | |
| 19 | 4812126590 | Bulkhead union | 2 | | | |
| 20 | 4700791745 | Connector | 2 | | | |
| 21 | 4812130731 | Hydraulic motor | 2 | | | |
| 22 | 4812130112 | Hydraulic motor | 1 | | | |
| 23 | - | Drive unit | 1 | | | |

**Propulsion system** 4812125789 Hydraulic pump

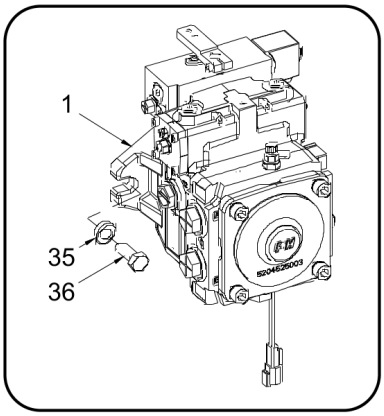


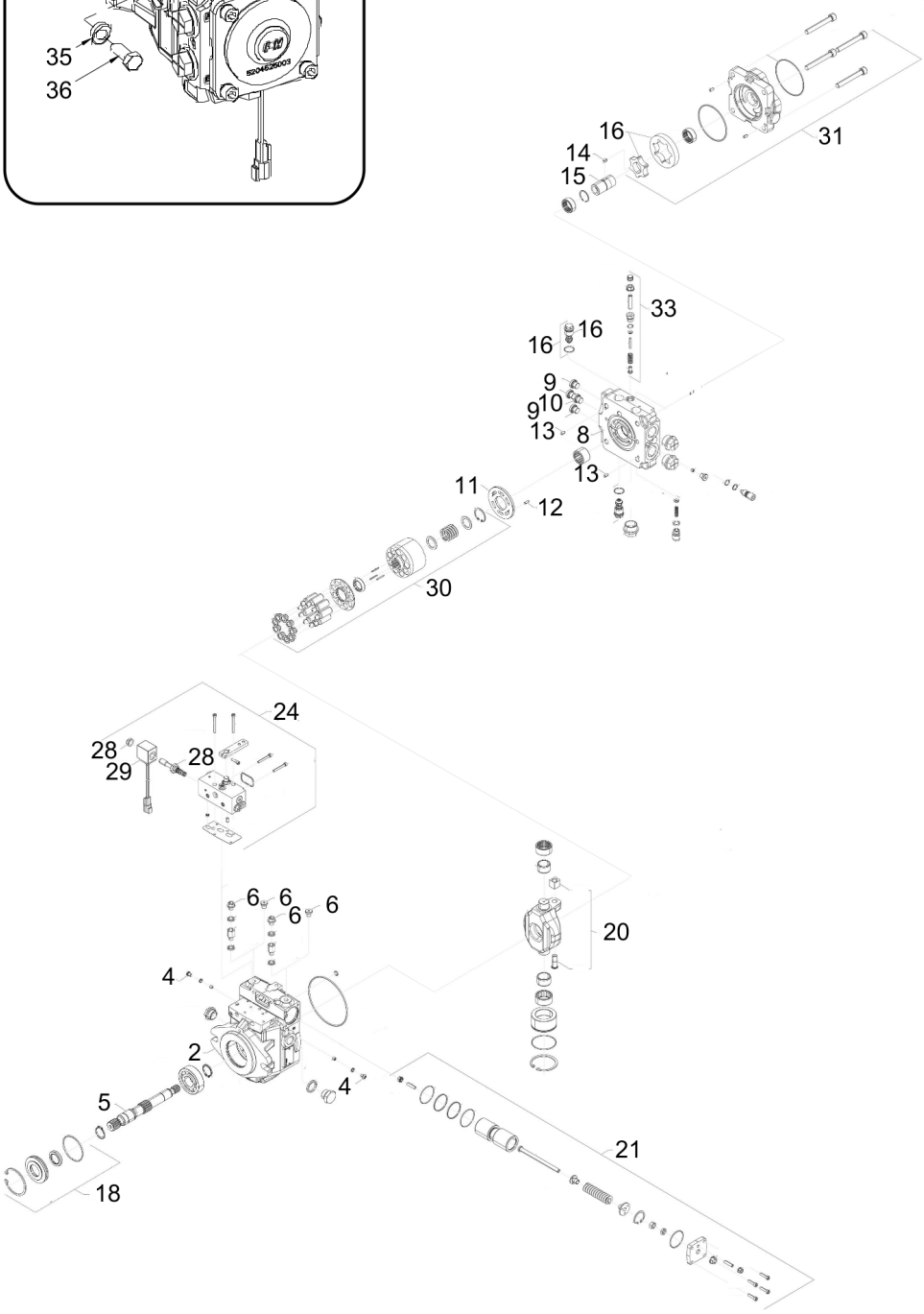

| Item | Part No. | Name | Qty | L | C | SN INFO |
|---|---|---|---|---|---|---|
| 1 | 4812125789 | Hydraulic pump | 1 | | | |
| 3 | - | Plug | 1 | | | |
| 4 | - | Screw M6x8 | 2 | | | |
| 6 | - | Plug | 2 | | | |
| 9 | - | Plug | 3 | | | |
| 11 | - | Plate | 1 | | | |
| 12 | - | Pin | 1 | | | |
| 13 | 4812162395 | Pin | 2 | | | |
| 14 | 4812162454 | Key | 1 | | | |
| 15 | 4812162455 | Coupling shaft | 1 | | | |
| 16 | 4812160855 | Valve | 2 | | | |
| 22 | - | Screw M6x25 | 2 | | | |
| 23 | 4812162384 | Restrictor kit | 1 | | | |
| 24 | - | Control | 1 | | | |
| 26 | - | Screw M5x40 | 2 | | | |
| 27 | - | Screw M5x50 | 2 | | | |
| 28 | 4812160799 | Brake valve | 1 | | | |
| 29 | - | Coil | 1 | | | |
| 31 | 4812162388 | Charge pump kit | 1 | | | |
| 32 | - | Charge pump | 1 | | | |
| 35 | 4700904703 | Plain washer 13x24x4 mm | 2 | | | |
| 36 | 4700500046 | Hex. head screw M12x030H | 2 | | | |

**Propulsion system** 4812130112 Hydraulic motor

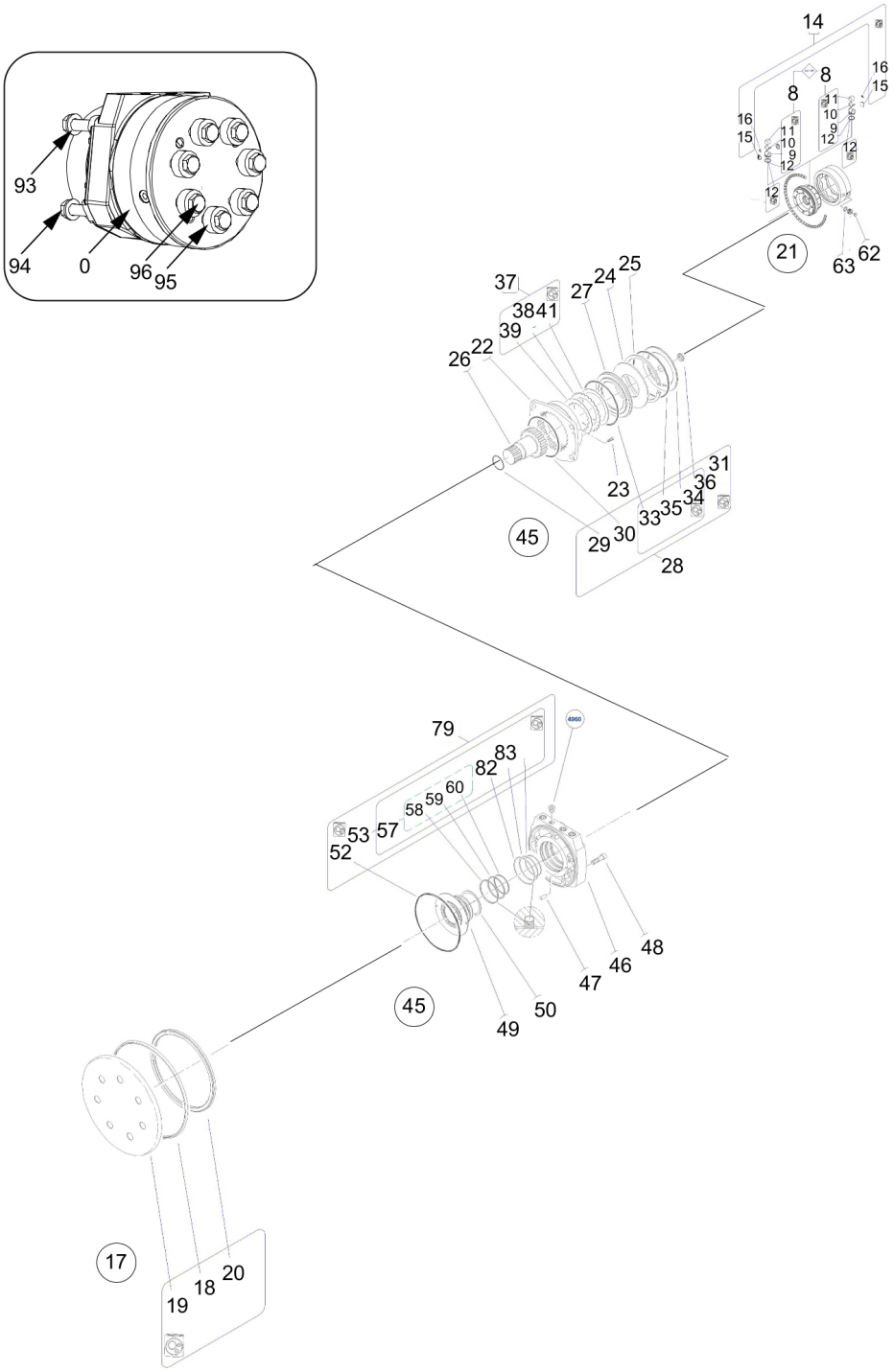

| Item | Part No. | Name | Qty | L | C | SN INFO |
|---|---|---|---|---|---|---|
| 0 | 4812130112 | Hydraulic motor | 1 | | | |
| 4 | - | Plug | 1 | | | |
| 8 | | Radial piston | 7 | | | |
| 12 | - | Piston ring | 1 | | | |
| 14 | | Piston repair kit | 1 | | | |
| 23 | - | Screw M6x16 | 4 | | | |
| 24 | - | Washer | 1 | | | |
| 25 | - | Snap ring | 1 | | | |
| 27 | 4812156169 | Brake piston | 1 | | | |
| 36 | - | Plug | 1 | | | |
| 41 | - | Shim | 1 | | | |
| 42 | - | Shim | 1 | | | |
| 43 | - | Shim | 1 | | | |
| 44 | - | Shim | 1 | | | |
| 51 | - | Washer | 1 | | | |
| 64 | 4812162752 | Cover kit | 1 | | | |
| 69 | - | Sensor | 1 | | | |
| 78 | - | Plug | 1 | | | |
| 93 | 4700904232 | Washer 15x30x4 300 HV | 4 | | | |
| 94 | 4700947700 | Spacer | 4 | | | |
| 95 | 4700384114 | Spacer | 7 | | | |
| 96 | 4700947697 | Screw | 7 | | | |

**Steering system** Steering system

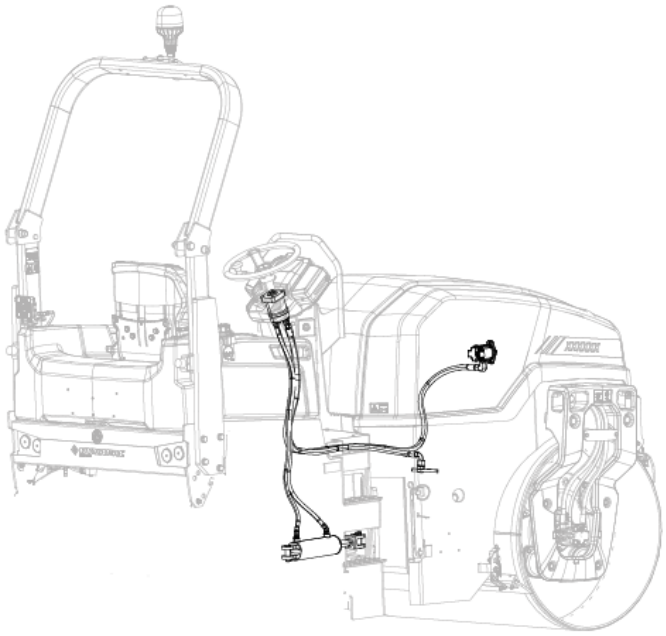

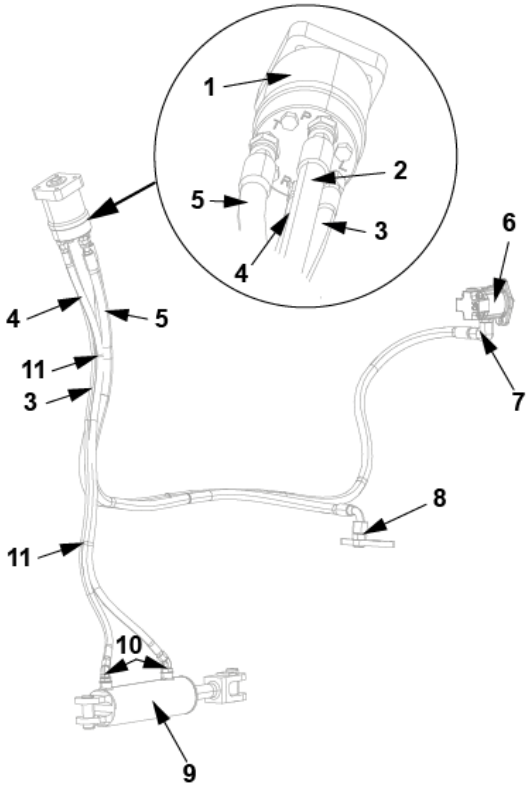

| Item | Part No. | Name | Qty | L | C | SN INFO |
|---|---|---|---|---|---|---|
| 1 | 4812112109 | Steering valve | 1 | | | |
| 2 | 4812130527 | Hydraulic hose | 1 | | | |
| 3 | 4812130529 | Hydraulic hose | 1 | | | |
| 4 | 4812130528 | Hydraulic hose | 1 | | | |
| 5 | 4812130530 | Hydraulic hose | 1 | | | |
| 6 | 4812125795 | Hydraulic motor | 1 | | | |
| 7 | 4700791699 | Adapter | 1 | | | |
| 8 | 4700791743 | Straight connector ORFS | 1 | | | |
| 9 | 4812132194 | Hydraulic cylinder | 1 | | | |
| 10 | 4700792389 | Elbow 45 orfs | 2 | | | |
| 11 | 4700792602 | Cable Tie with Holder, Nylon Black | 2 | | | |

**Steering system** 4812132194 Hydraulic cylinder

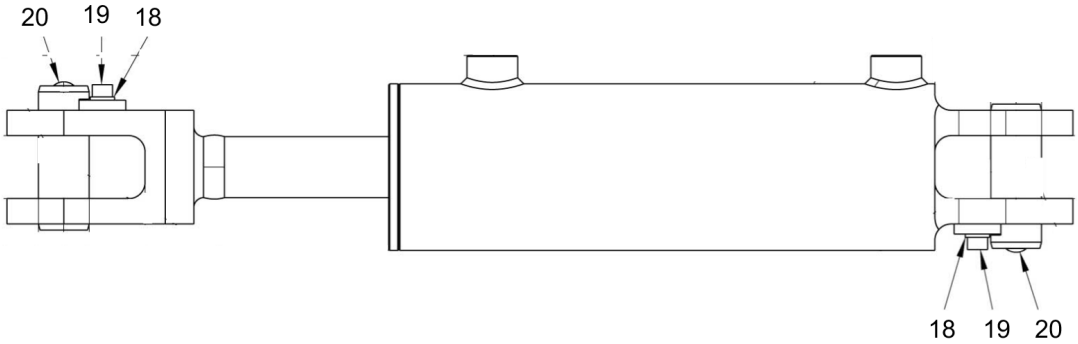


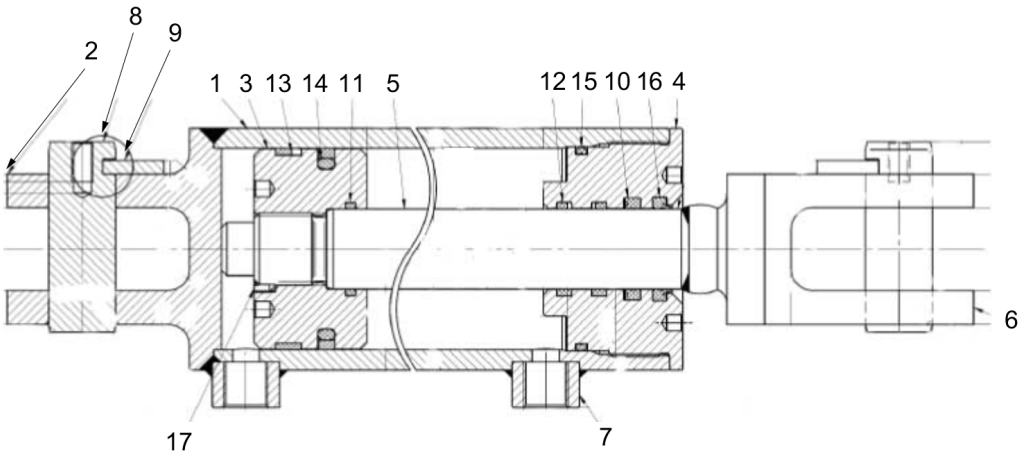

| Item | Part No. | Name | Qty | L | C | SN INFO |
|---|---|---|---|---|---|---|
| 0 | 4812132194 | Hydraulic cylinder | 1 | | | |
| 1 | - | Cylinder tube | 1 | | | |
| 2 | - | Cylinder end | 1 | | | |
| 3 | - | Piston | 1 | | | |
| 4 | - | Pilot boss | 1 | | | |
| 5 | - | Piston rod | 1 | | | |
| 6 | - | Fork | 1 | | | |
| 7 | - | Connection | 2 | | | |
| 8 | - | Pin | 2 | | | |
| 9 | - | Pin lock | 2 | | | |
| 10 | - | Lock nut | 1 | | | |
| 11 | - | O-ring | 1 | | | |
| 12 | - | Piston guide | 2 | | | |
| 13 | - | Piston guide | 1 | | | |
| 14 | - | Piston seal | 1 | | | |
| 15 | - | Static seal | 1 | | | |
| 16 | - | Wiper | 1 | | | |
| 17 | - | Screw M6x8 | 1 | | | |
| 18 | 4700904228 | Steel plain washer | 4 | | | |
| 19 | 4812127030 | Screw | 4 | | | |
| 20 | 4700926215 | Protective plug | 2 | | | |

**Edge cutter (option)** Edge cutter - Left side

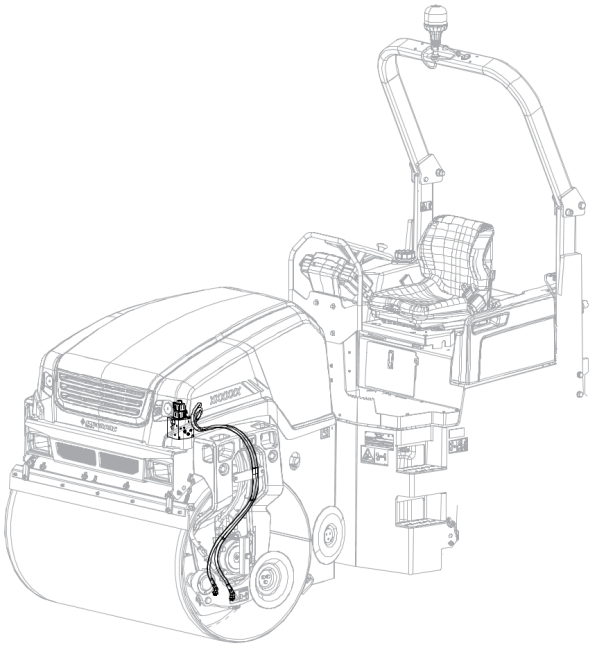

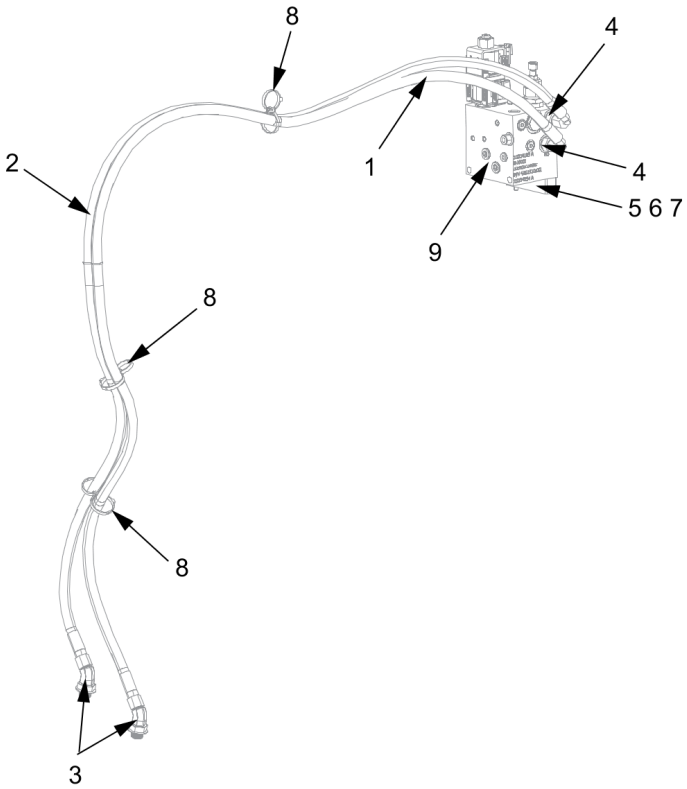

| Item | Part No. | Name | Qty | L | C | SN INFO |
|---|---|---|---|---|---|---|
| 1 | 4812130559 | Hydraulic hose | 1 | | | |
| 2 | 4812130560 | Hydraulic hose | 1 | | | |
| 3 | 4700792389 | Elbow 45 orfs | 2 | | | |
| 4 | 4700791914 | Adapter | 2 | | | |
| 5 | 4700904228 | Steel plain washer | 1 | | | |
| 6 | 4812130449 | Bracket | 1 | | | |
| 7 | 4700500181 | Screw | 1 | | | |
| 8 | 4700792686 | Cable tie with holder | 3 | | | |
| 9 | 4812130122 | Hydraulic valve | 1 | | | |
| 9-1 | 4812130752 | Screw M8x200 | 3 | | | |
| 9-2 | 4700902286 | Hexagon lock nut with flange M8 | 1 | | | |
| 9-3 | 4700373504 | Spacer sleeve | 2 | | | |

**Edge cutter (option)** Edge cutter - Right side

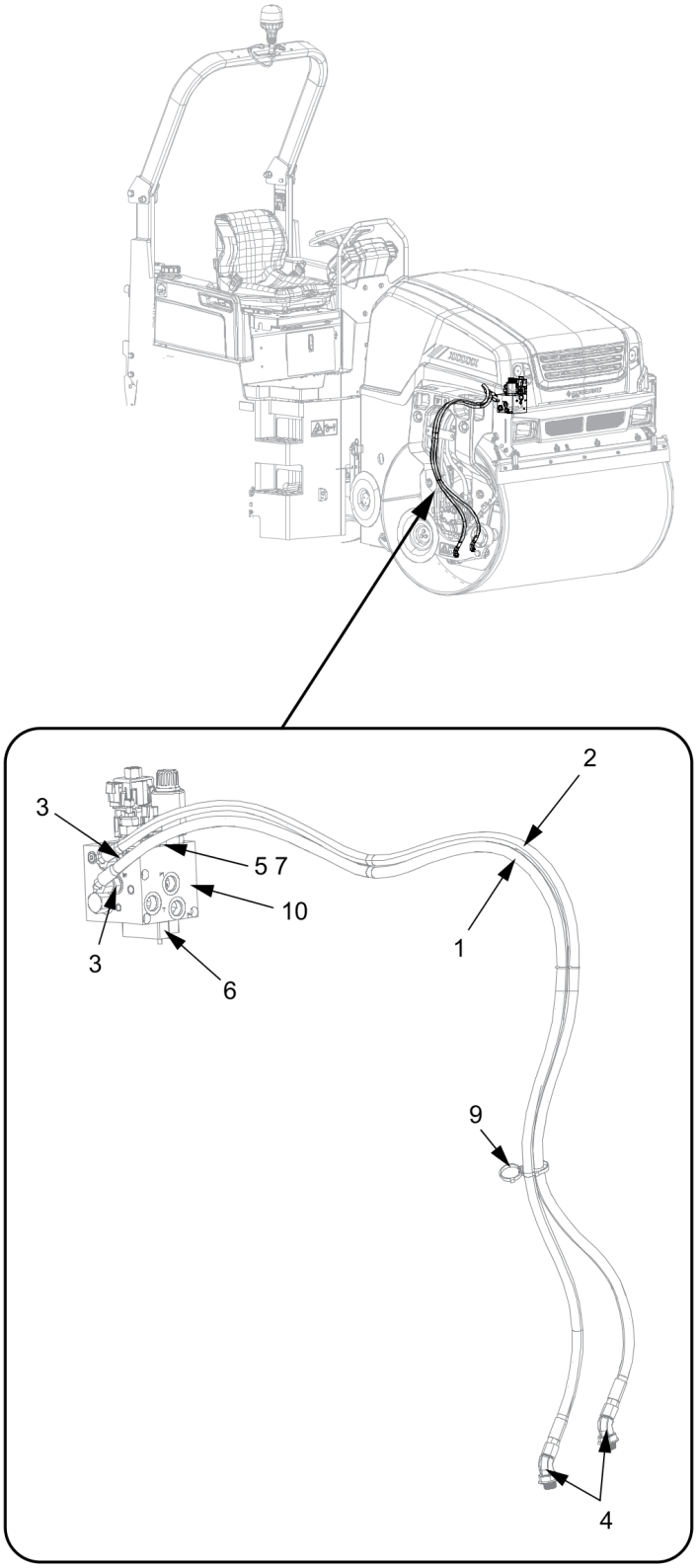

| Item | Part No. | Name | Qty | L | C | SN INFO |
|---|---|---|---|---|---|---|
| 1 | 4812130557 | Hydraulic hose | 1 | | | |
| 2 | 4812130557 | Hydraulic hose | 1 | | | |
| 3 | 4700791914 | Adapter | 2 | | | |
| 4 | 4700792389 | Elbow 45 orfs | 2 | | | |
| 5 | 4700904228 | Steel plain washer | 2 | | | |
| 6 | 4812129520 | Bracket | 1 | | | |
| 7 | 4700500181 | Screw | 2 | | | |
| 9 | 4700792686 | Cable tie with holder | 1 | | | |
| 10 | 4812125681 | Hydraulic valve | 1 | A | | |
| 10 | 4812130122 | Hydraulic valve | 1 | B | | |
| 10-1 | 4812130752 | Screw M8x200 | 3 | | | |
| 10-2 | 4700902286 | Hexagon lock nut with flange M8 | 1 | | | |
| 10-3 | 4700373504 | Spacer sleeve | 2 | | | |

Comments for Page: Edge cutter - Right side

A = Singel edge cutter

B = Dual edge cutter

**Edge cutter (option)** Hydraulic cylinder module

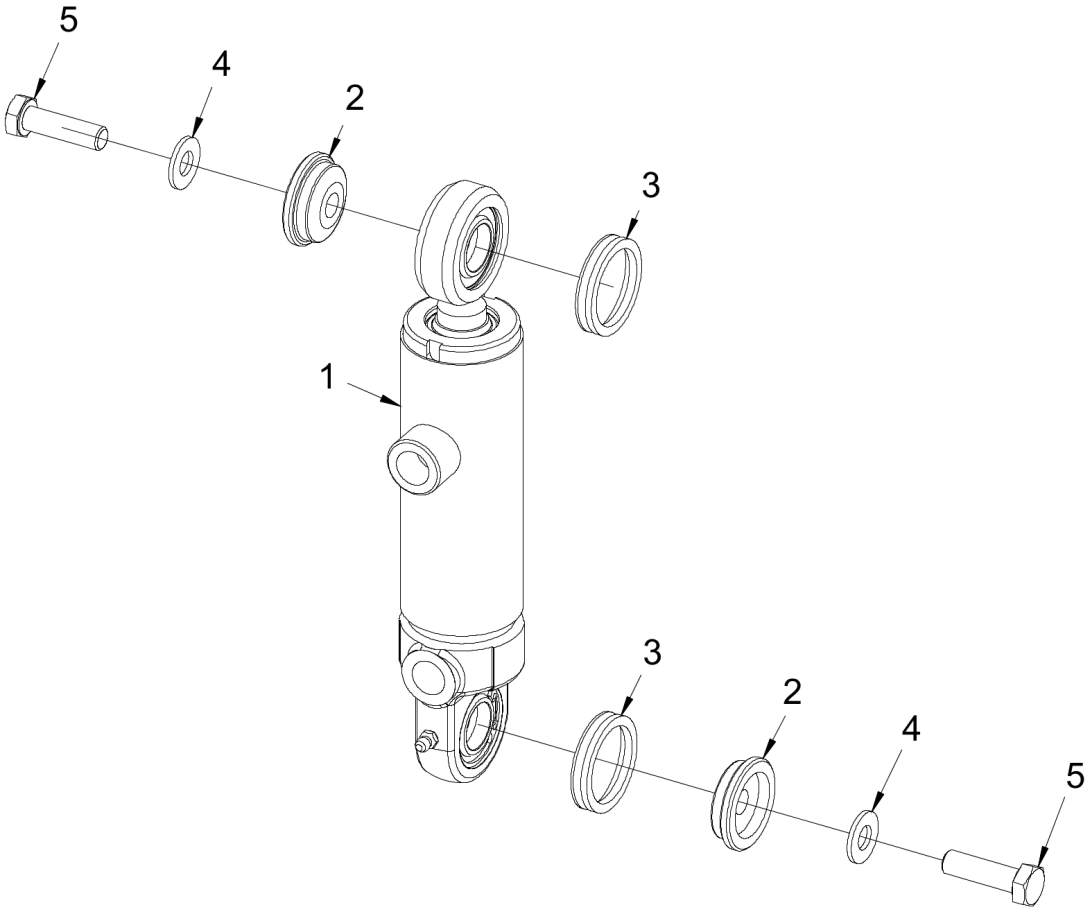

| Item | Part No. | Name | Qty | L | C | SN INFO |
|---|---|---|---|---|---|---|
| 1 | 4812125907 | Hydraulic cylinder | 1 | | | |
| 2 | 4812125937 | Washer | 2 | | | |
| 3 | 4700167054 | Sealing | 2 | | | |
| 4 | 4700904230 | Plain washer M10 10.5X22X2.0 | 2 | | | |
| 5 | 4700500030 | Hexagon screw M | 2 | | | |

**Edge cutter (option)** 4812125907 Hydraulic cylinder

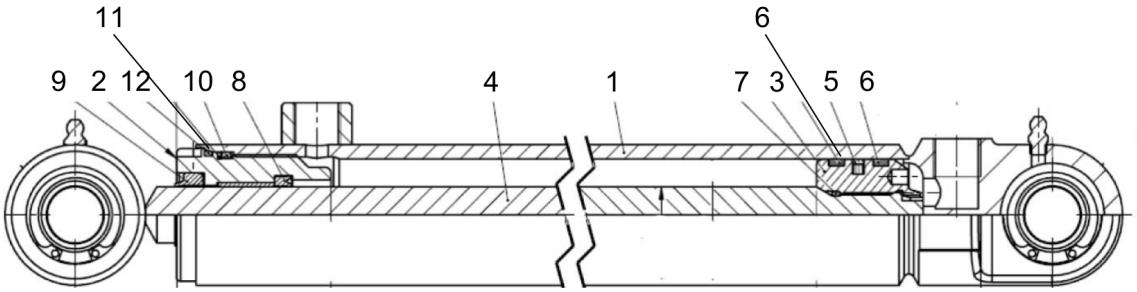

| Item | Part No. | Name | Qty | L | C | SN INFO |
|---|---|---|---|---|---|---|
| 0 | 4812125907 | Hydraulic cylinder | 1 | | | |
| 5 | - | Piston seal | 1 | | | |
| 6 | - | Guide ring | 2 | | | |
| 7 | - | O-ring | 1 | | | |
| 8 | - | ROD SEAL | 1 | | | |
| 9 | - | Scraper | 1 | | | |
| 10 | - | O-ring | 1 | | | |
| 11 | | Backup ring | 1 | | | |
| 12 | - | O-ring | 1 | | | |

**Chip spreader (option)** Chip spreader (option)

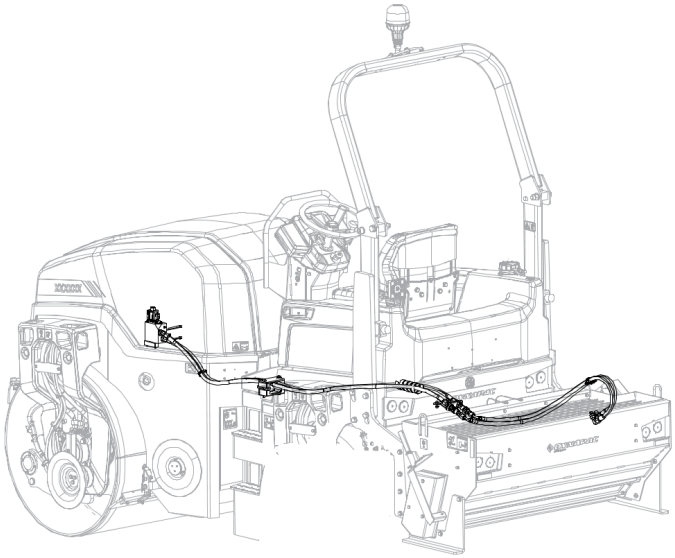

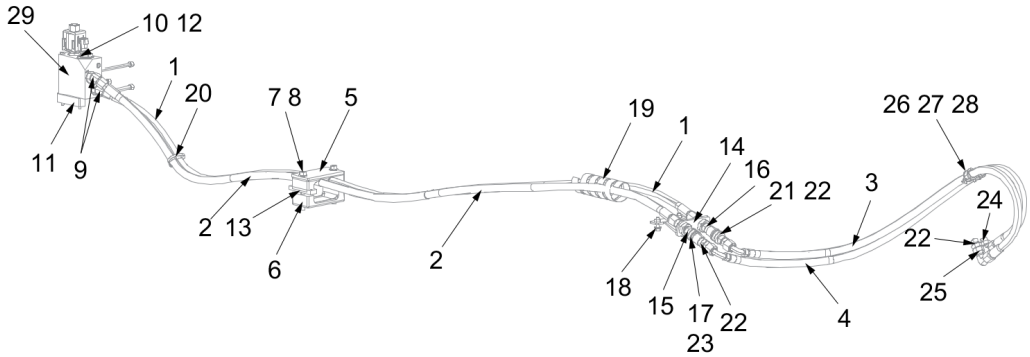

| Item | Part No. | Name | Qty | L | C | SN INFO |
|---|---|---|---|---|---|---|
| 1 | 4812130568 | Hydraulic hose | 1 | | | |
| 2 | 4812130568 | Hydraulic hose | 1 | | | |
| 3 | 4812130569 | Hydraulic hose | 1 | | | |
| 4 | 4812130570 | Hydraulic hose | 1 | | | |
| 5 | 4700335914 | Cover plate | 1 | | | |
| 6 | 4700343732 | Hose clamp | 2 | | | |
| 7 | 4700904056 | Stud | 2 | | | |
| 8 | 4700792817 | Hexagon nut with flange | 2 | | | |
| 9 | 4700792436 | Elbow 45° | 2 | | | |
| 10 | 4700904228 | Steel plain washer | 2 | | | |
| 11 | 4812130449 | Bracket | 1 | | | |
| 12 | 4700500181 | Screw | 2 | | | |
| 13 | 4812124515 | Rubber part | 2 | | | |
| 14 | 4812130470 | Bracket | 1 | | | |
| 15 | 4812125859 | Connector | 2 | | | |
| 16 | 4700792046 | Quick disconnect coupling | 1 | | | |
| 17 | 4700792822 | Quick disconnect coupling | 1 | | | |
| 18 | 4700902041 | Screw, M8x25mm 8.8 A2K | 2 | | | |
| 19 | 4700904623 | Hose guard | 0,15 | | | |
| 20 | 4700792602 | Cable Tie with Holder, Nylon Black | 1 | | | |
| 21 | 4700792822 | Quick disconnect coupling | 1 | | | |
| 22 | 4700904727 | Adapter | 3 | | | |
| 23 | 4700792046 | Quick disconnect coupling | 1 | | | |
| 24 | 4700791398 | Elbow 90, O-ring | 1 | | | |
| 25 | 4700791745 | Connector | 1 | | | |
| 26 | 4700921028 | Pipe clamp | 2 | | | |
| 27 | 4700904281 | Steel plain washer | 2 | | | |
| 28 | 4700500003 | Hex. screw | 2 | | | |
| 29 | 4812125682 | Hydraulic valve | 1 | | | |

## **Hydraulic system** 4812130731_Hydraulic motor

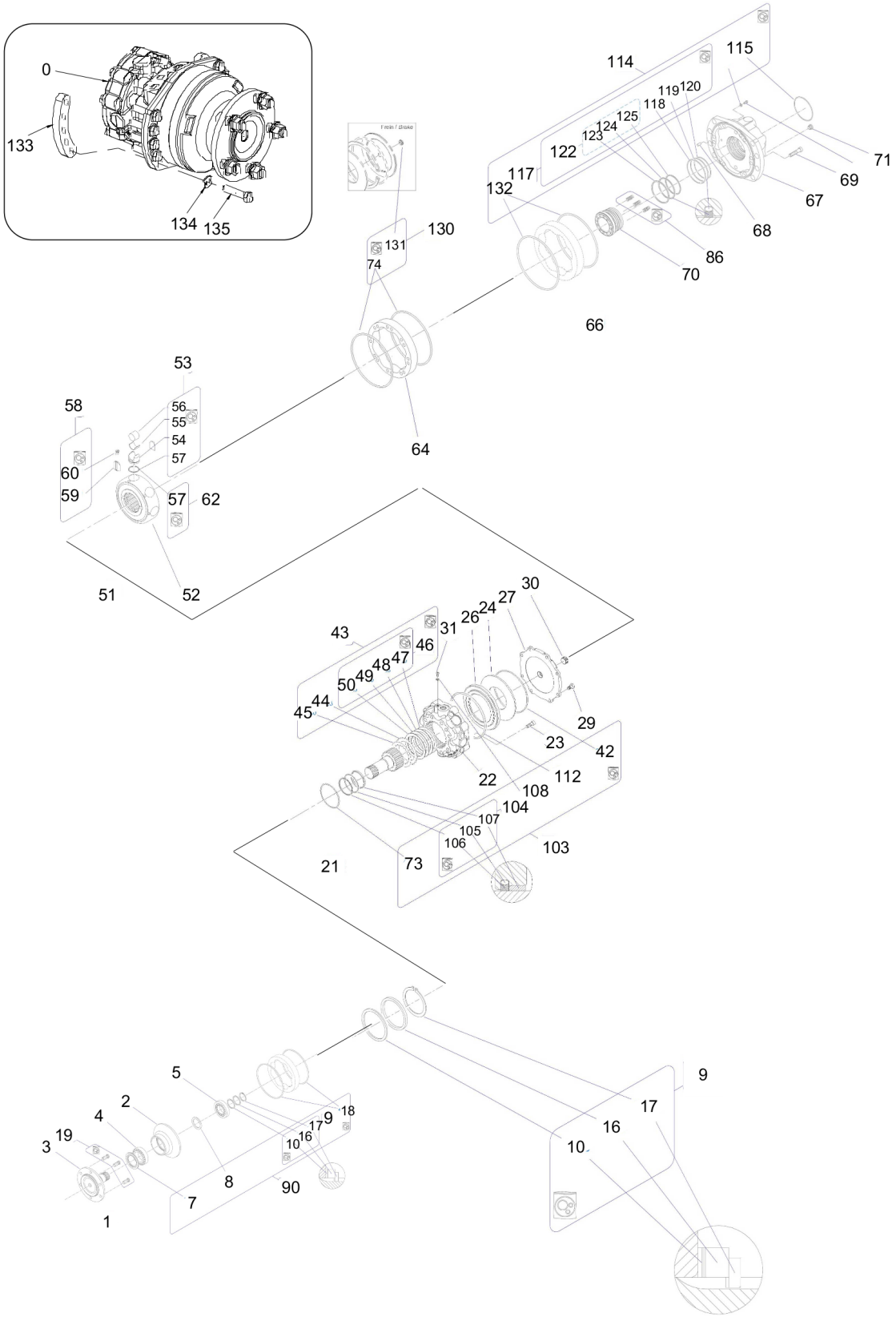

Referenced Pages

4812130114 Hydraulic pump . . . . . 109

**Electrical equipment** Circuit board and fuses

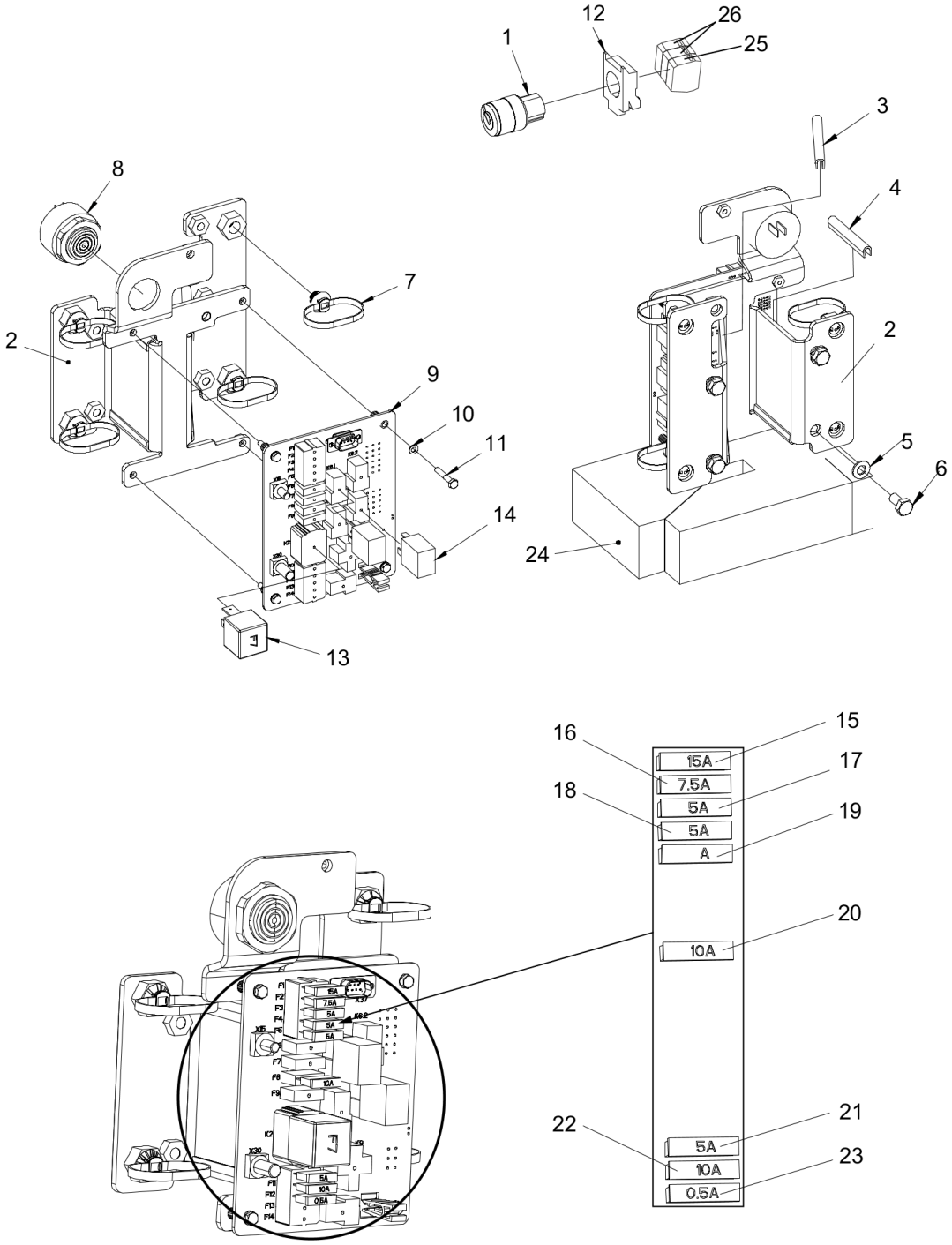

| Item | Part No. | Name | Qty | L | C | SN INFO |
|---|---|---|---|---|---|---|
| 1 | 4811000333 | Ignition switch | 1 | | | |
| 1.1 | 4700902866 | Key "455" | 1 | | | |
| 2 | 4812126033 | Bracket | 1 | | | |
| 3 | 4700202028 | Edge trim | 0,073 M | | | |
| 4 | 4700202028 | Edge trim | 0,059 M | | | |
| 5 | 4700904229 | Steel plain washer 8.4X16X1.5 | 4 | | | |
| 6 | 4700500019 | Hexagon head screw M | 4 | | | |
| 7 | 4700792602 | Cable Tie with Holder, Nylon Black | 4 | | | |
| 8 | 4700385599 | Buzzer | 1 | | | |
| 9 | 4812126176 | Circuit board | 1 | | | |
| 10 | 4700904698 | Plain washer | 4 | | | |
| 11 | 4700904312 | Screw | 4 | | | |
| 12 | 4700791733 | Fixing collar | 1 | | | |
| 13 | 4812126108 | Relay | 1 | | | |
| 14 | 4700381390 | Relay | 2 | | | |
| 15 | 4700901228 | Fuse 15A Blue | 1 | | | |
| 16 | 4700901226 | Fuse 7.5A Brown | 1 | | | |
| 17 | 4700901225 | Fuse 5A Tan | 1 | | | |
| 18 | 4700901225 | Fuse 5A Tan | 1 | | | |
| 19 | 4700901224 | Fuse, 3A Violet | 1 | | B | |
| 19 | 4700901225 | Fuse 5A Tan | 1 | | A | |
| 20 | 4700901227 | Fuse 10A Red | 1 | | | |
| 21 | 4700901225 | Fuse 5A Tan | 1 | | | |
| 22 | 4700901227 | Fuse 10A Red | 1 | | | |
| 23 | 4812127367 | Fuse 1A Black | 1 | | | |
| 24 | 4812129618 | Celluar rubber | 1 | | | |
| 25 | 4700791736 | Connector | 1 | | | |
| 26 | 4700791723 | Connector | 2 | | | |

Comments for Page: Circuit board and fuses

A) D1703

B) D1803

**Electrical equipment** Backup alarm module

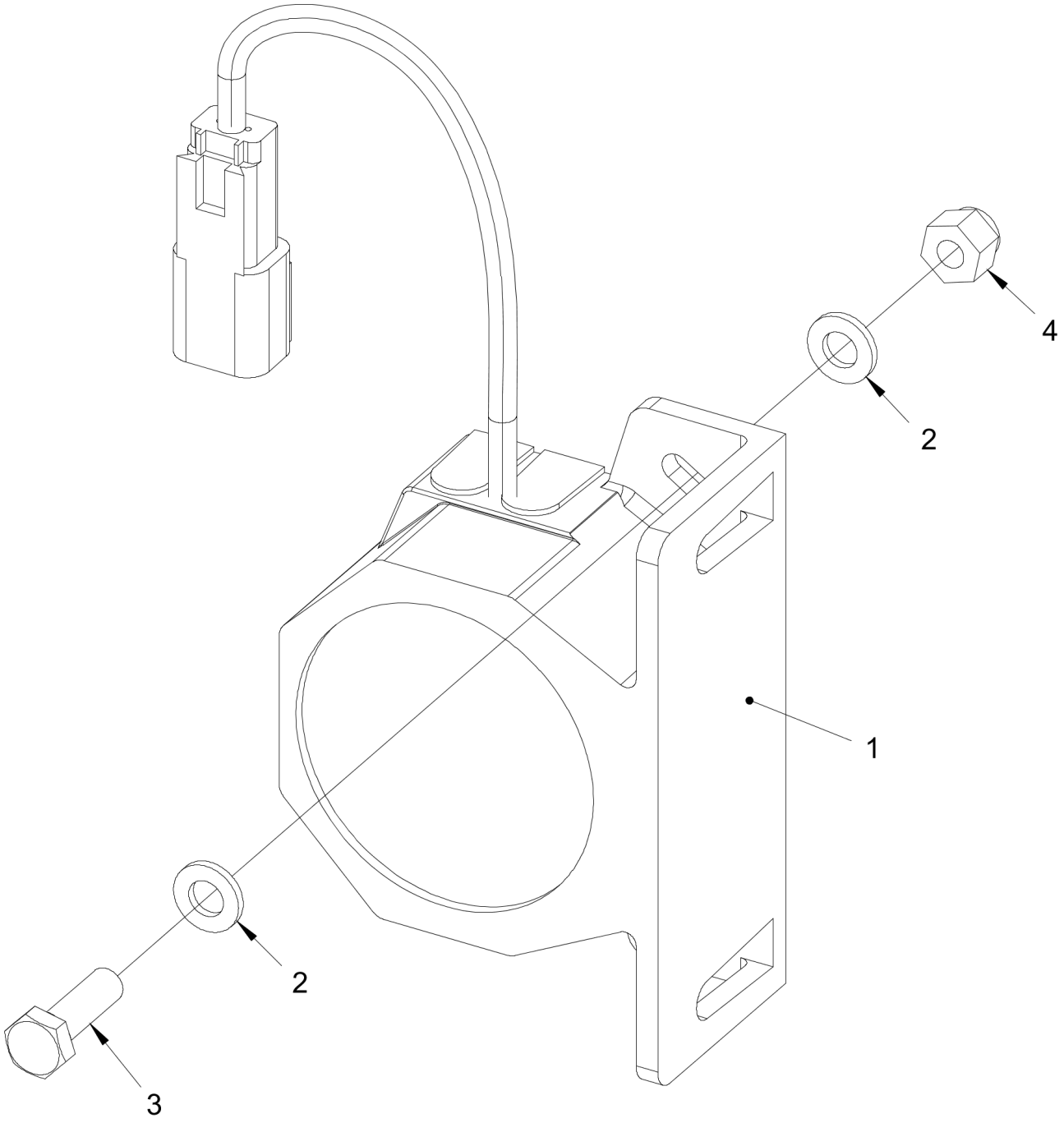

| Item | Part No. | Name | Qty | L | C | SN INFO |
|---|---|---|---|---|---|---|
| 1 | 4700792098 | Back-up alarm | 1 | | | |
| 2 | 4700904228 | Steel plain washer | 4 | | | |
| 3 | 4700500040 | Hex bolt M06X020H 8.8 A2K | 2 | | | |
| 4 | 4700586002 | Lock nut M | 2 | | | |

**Electrical equipment** Cable harness - Dual vibration

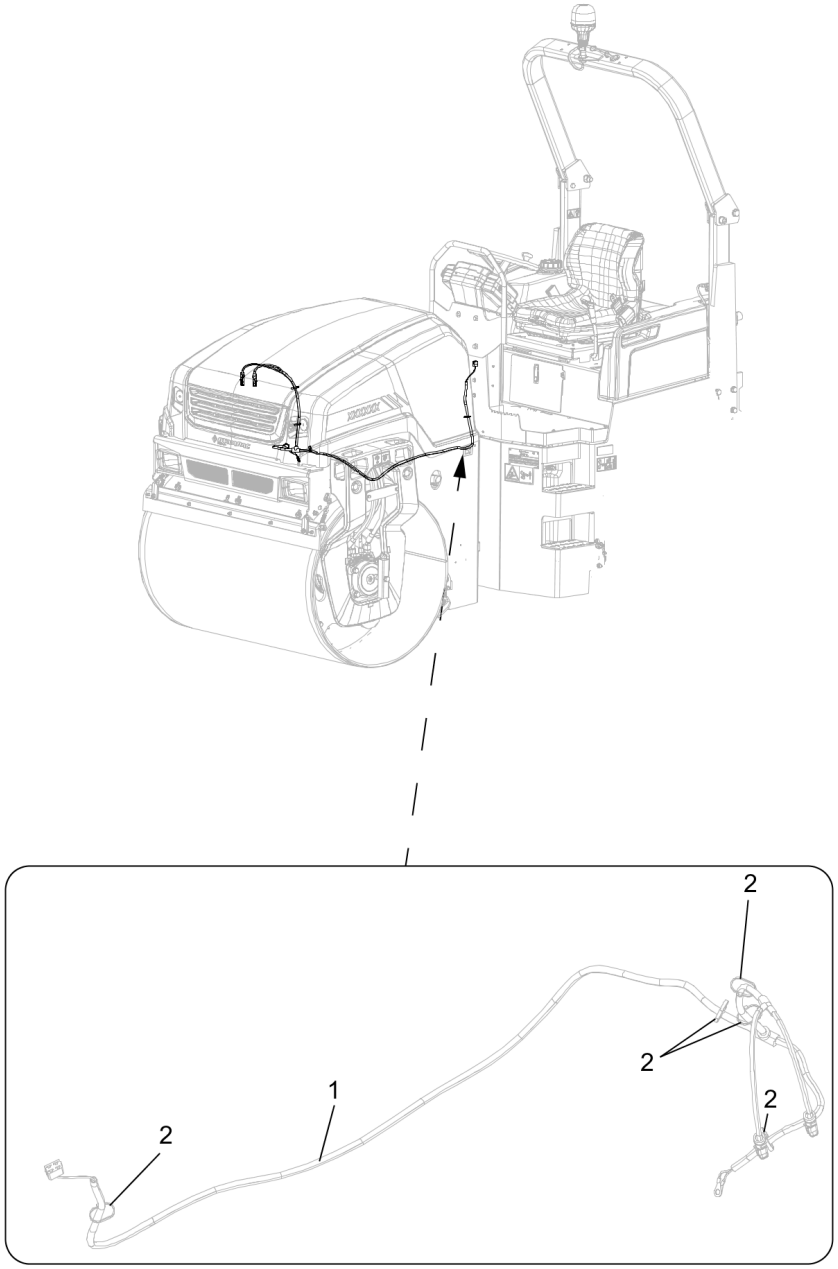

| Item | Part No. | Name | Qty | L | C | SN INFO |
|---|---|---|---|---|---|---|
| 1 | 4812130681 | Cable harness | 1 | | | |
| 2 | 4700313041 | Cable tie | N | | | |

**Electrical equipment** Cable harness - Single pole battery disconnector

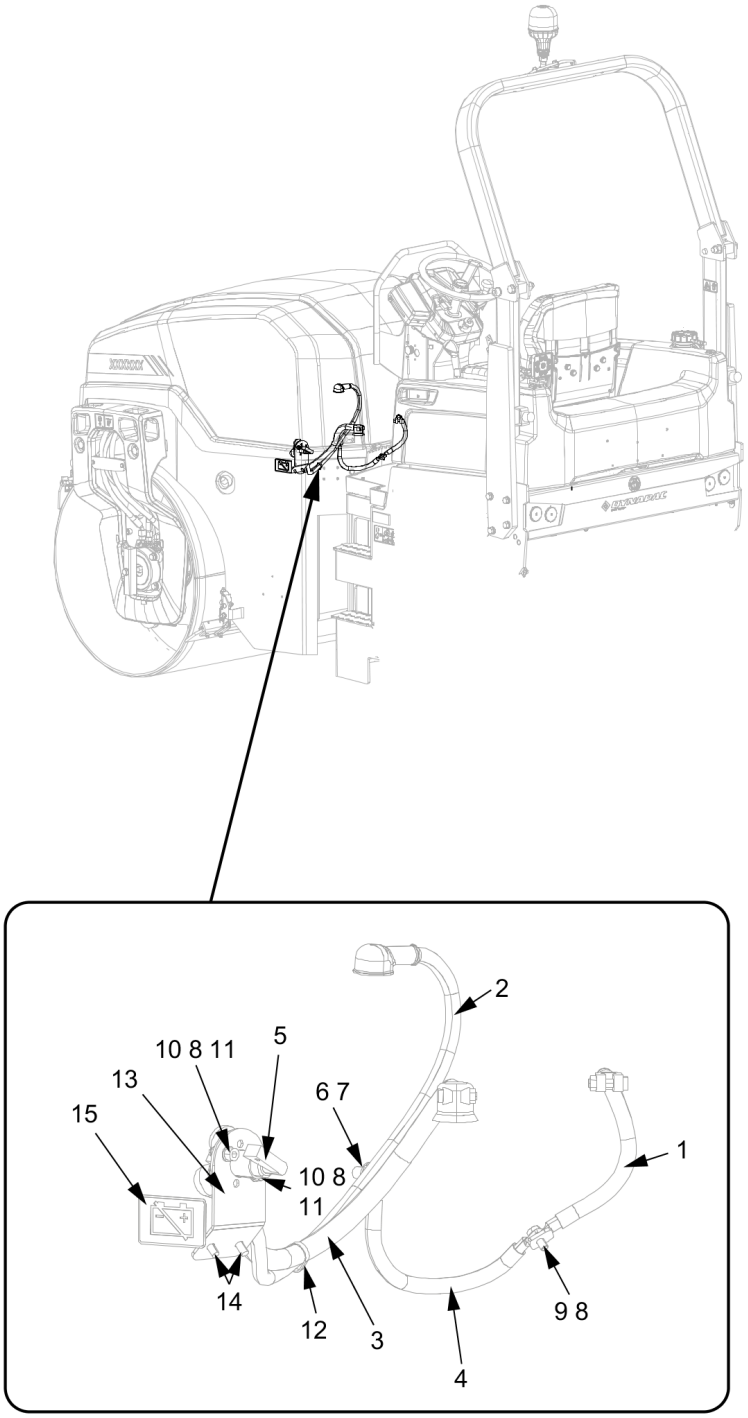

| Item | Part No. | Name | Qty | L | C | SN INFO |
|---|---|---|---|---|---|---|
| 1 | 4700791818 | Battery cable | 1 | | | |
| 2 | 4812127099 | Connection cable coarse | 1 | | | |
| 3 | 4812130577 | Battery cable | 1 | | | |
| 4 | 4700903760 | Connection cable coarse | 1 | | | |
| 5 | 4700357567 | Battery switch, cpl | 1 | | | |
| 5.1 | 4700902560 | Handle | 1 | | | |
| 6 | 4700904703 | Plain washer 13x24x4 mm | 2 | | | |
| 7 | 4700792250 | Screw | 1 | | | |
| 8 | 4700904229 | Steel plain washer 8.4X16X1.5 | 3 | | | |
| 9 | 4700500053 | Screw, M8x20 mm 8.8 A2K | 1 | | | |
| 10 | 4700508019 | Cylinder screw | 2 | | | |
| 11 | 4700586003 | Lock nut M8 | 2 | | | |
| 12 | 4700313041 | Cable tie | 1 | | | |
| 13 | 4812126940 | Bracket | 1 | | | |
| 14 | 4700901832 | Hexagon screw with flange M | 2 | | | |
| 15 | 4700904835 | Decal Battery power-disconnect | 1 | | | |

**Electrical equipment** Cable harness - Main engine (CR)

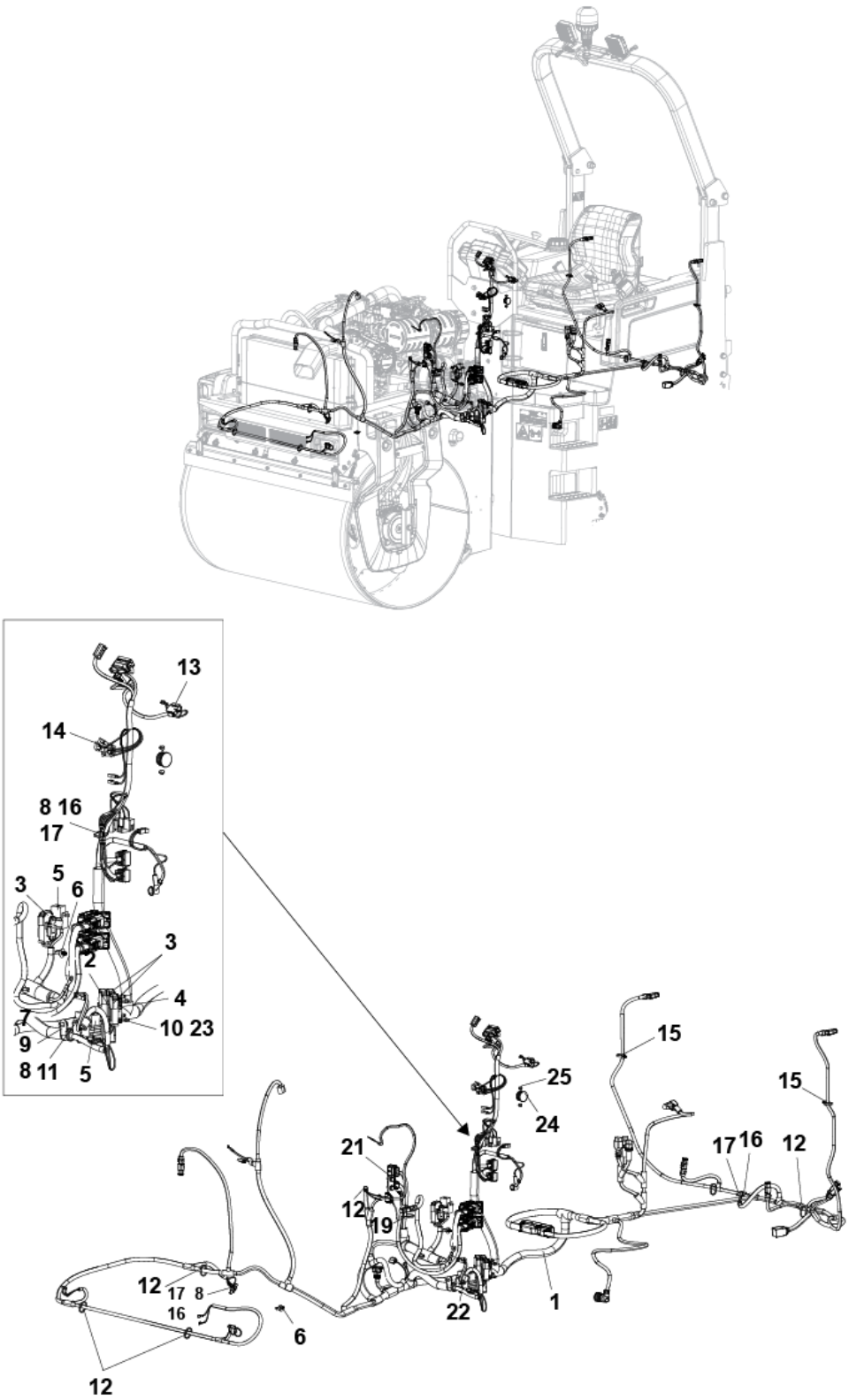

| Item | Part No. | Name | Qty | L | C | SN INFO |
|---|---|---|---|---|---|---|
| 1 | 4812129657 | Cale hables | 1 | | | |
| 2 | 4700904038 | Fuse 40A  Orange | 1 | | | |
| 3 | 4700904039 | Fuse 50A Red | 3 | | | |
| 4 | 4700904036 | Bracket | 3 | | | |
| 5 | 4812126090 | Relay | 3 | | | |
| 6 | 4700792441 | Cable tie with holder | 3 | | | |
| 7 | 4700960727 | Clamp | 1 | | | |
| 8 | 4700904229 | Steel plain washer 8.4X16X1.5 | 9 | | | |
| 9 | 4700500019 | Hexagon head screw M | 1 | | | |
| 10 | 4700500087 | Screw | 4 | | | |
| 11 | 4700903782 | Screw M5x12 | 5 | | | |
| 12 | 4700313041 | Cable tie | N | | | |
| 13 | 4700791723 | Connector | 1 | | | |
| 14 | 4700904281 | Steel plain washer | 4 | | | |
| 15 | 4812115911 | Cable tie with holder | 2 | | | |
| 16 | 4700570005 | Hexagon nut M | 6 | | | |
| 17 | 4700903768 | Threaded stud | 3 | | | |
| 18 | 4812126189 | Bracket | 1 | | | |
| 19 | 4700792602 | Cable Tie with Holder, Nylon Black | 1 | | | |
| 21 | 4700500053 | Screw, M8x20 mm 8.8 A2K | 2 | | | |
| 22 | 4700904346 | Pipe clamp covered | 1 | | | |
| 23 | 4700586001 | Lock nut M | 4 | | | |
| 24 | 4700901446 | Protective plug | 1 | | | |
| 25 | 4700792256 | Plug | 2 | | | |
| 26 | 4700904032 | Fuse holder | 3 | | | |

**Electrical equipment** Cable harness kit, Dual Edge Cutter

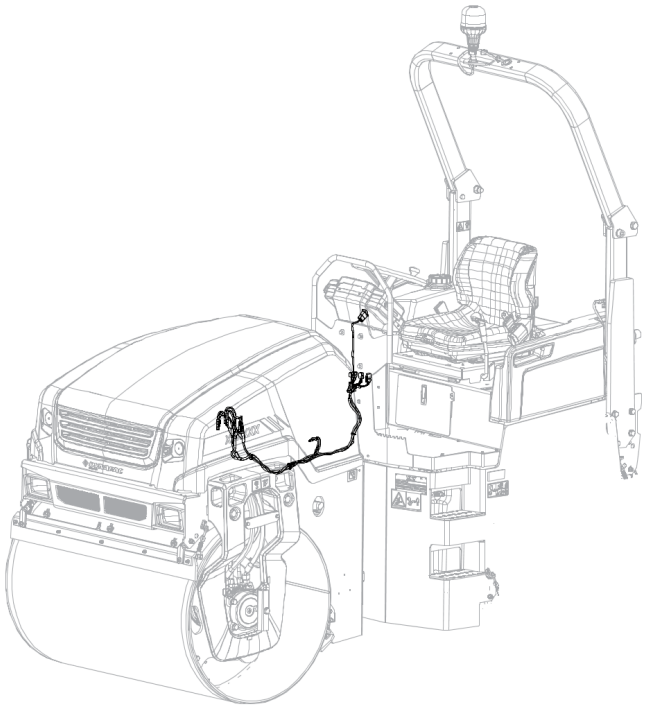

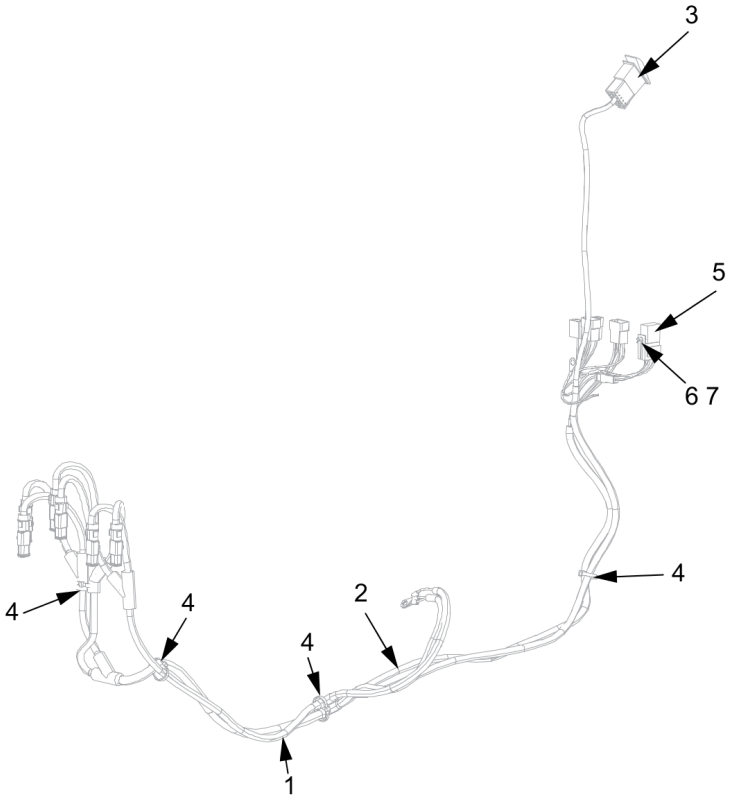

| Item | Part No. | Name | Qty | L | C | SN INFO |
|---|---|---|---|---|---|---|
| 1 | 4812130630 | Cable harness | 1 | | | |
| 2 | 4812130572 | Cable harness | 1 | | | |
| 3 | 4812132696 | Switch, working light | 1 | | | |
| 4 | 4700313041 | Cable tie | N | | | |
| 5 | 4700381390 | Relay | 1 | | | |
| 6 | 4700904281 | Steel plain washer | 1 | | | |
| 7 | 4700500003 | Hex. screw | 1 | | | |

**Electrical equipment** Cable harness, Asphalt temperature meter

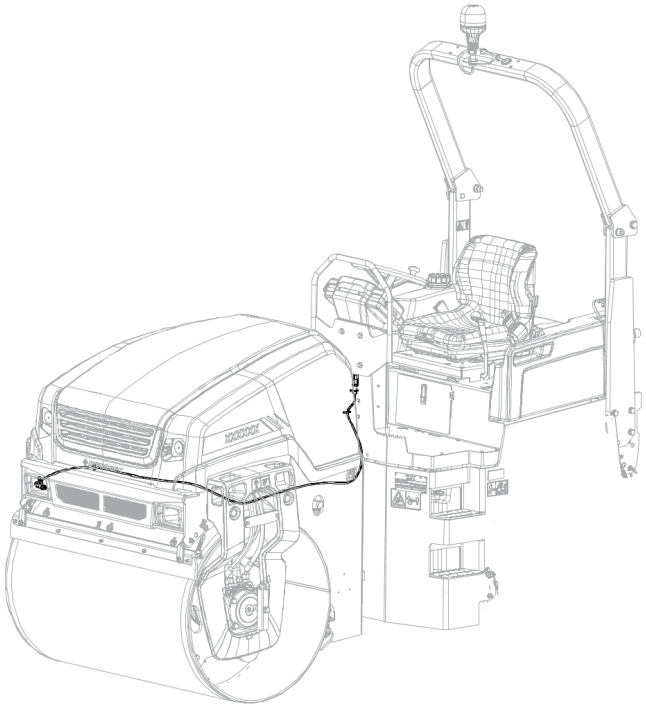

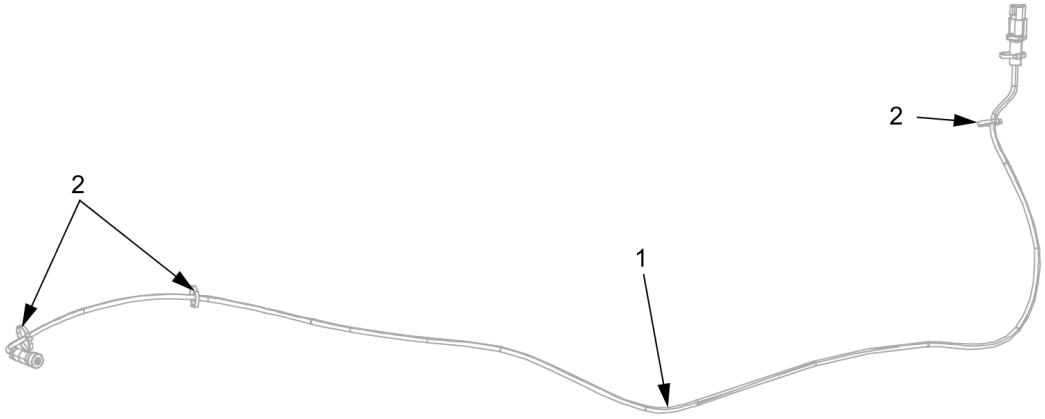

| Item | Part No. | Name | Qty | L | C | SN INFO |
|---|---|---|---|---|---|---|
| 1 | 4812120717 | Wiring harness | 1 | | | |
| 2 | 4700313041 | Cable tie | 4 | | | |

**Electrical equipment** Cable harness - Working lights, Canopy mounted (option)

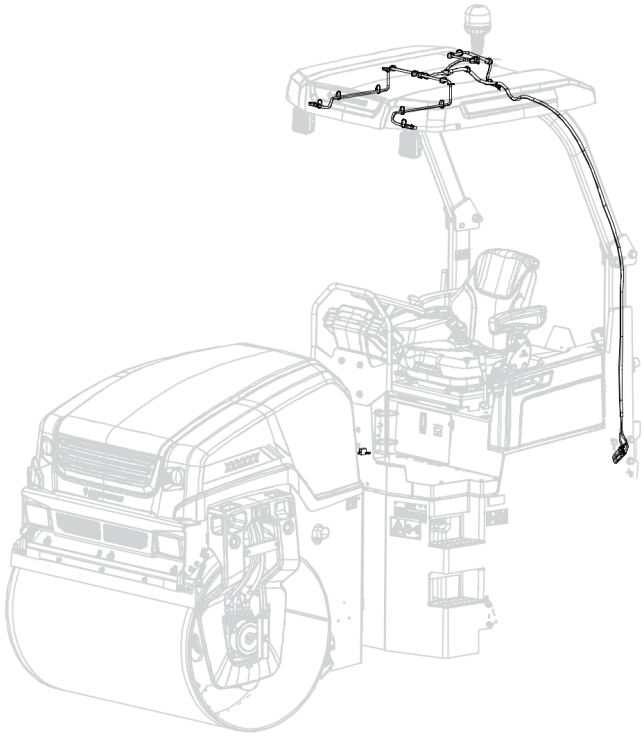

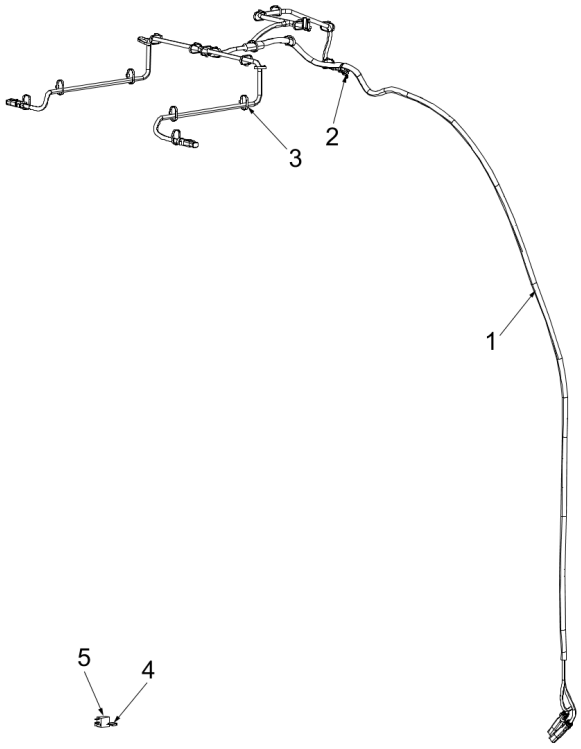

| Item | Part No. | Name | Qty | L | C | SN INFO |
|---|---|---|---|---|---|---|
| 1 | 4812130685 | Cable harness | 1 | | | |
| 2 | 4812115911 | Cable tie with holder | 1 | | | |
| 3 | 4700313041 | Cable tie | N | | | |
| 4 | 4700901225 | Fuse 5A Tan | 1 | | | |
| 5 | 4700381390 | Relay | 1 | | | |

**Electrical equipment** Cable harness - Driving lights (option)

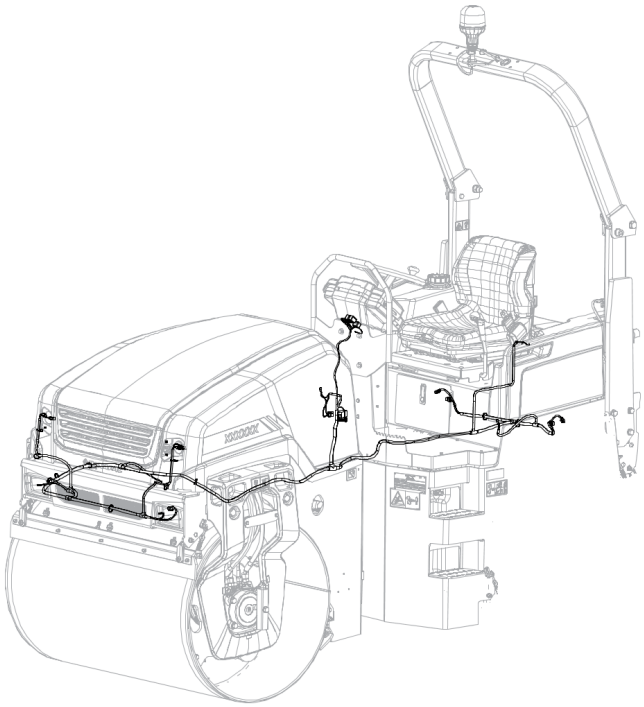

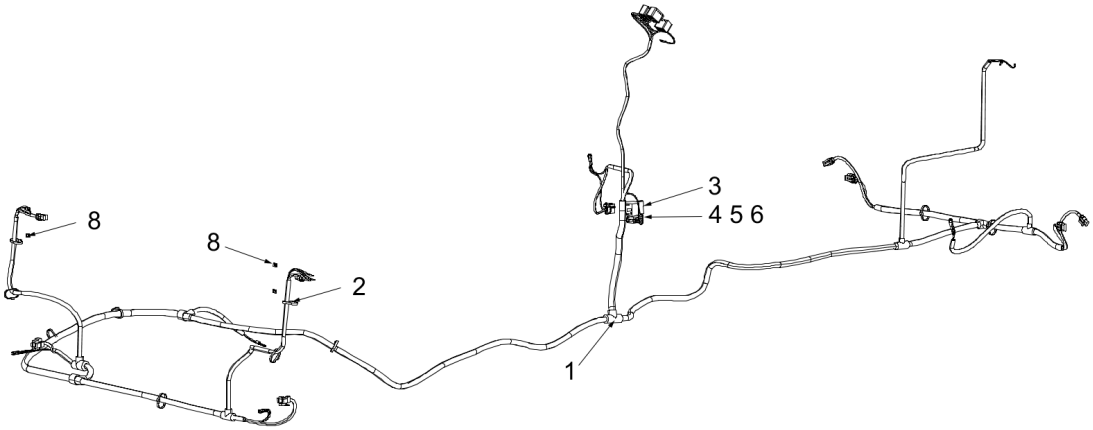

| Item | Part No. | Name | Qty | L | C | SN INFO |
|---|---|---|---|---|---|---|
| 1 | 4812129946 | Cable harness | 1 | | | |
| 2 | 4700313041 | Cable tie | N | | | |
| 3 | 4700904989 | Flash relay | 1 | | | |
| 4 | 4700381390 | Relay | 1 | | | |
| 5 | 4700901227 | Fuse 10A Red | 1 | | | |
| 6 | 4700901228 | Fuse 15A Blue | 1 | | | |
| 8 | 4700791971 | Quick lock nut | 4 | | | |

**Electrical equipment** Cable harness - Rotating beacon (option)

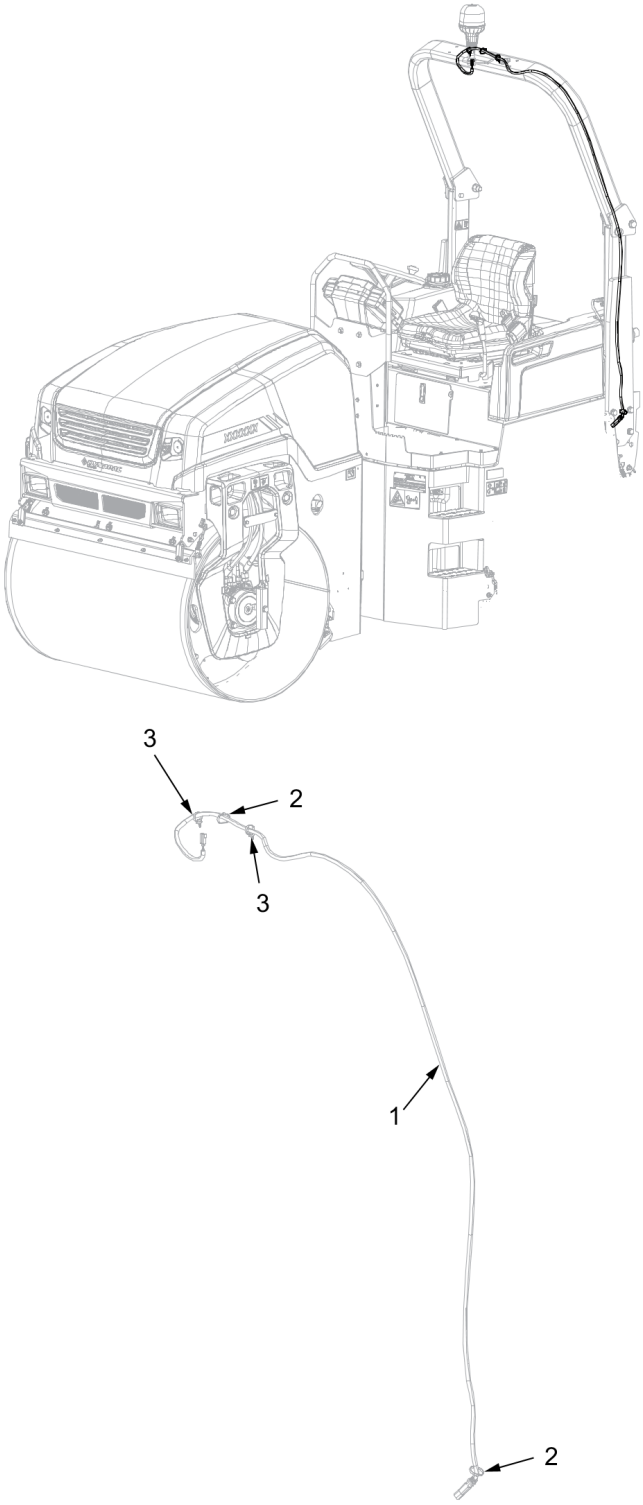

| Item | Part No. | Name | Qty | L | C | SN INFO |
|---|---|---|---|---|---|---|
| 1 | 4812130679 | Cable harness | 1 | | | |
| 2 | 4700313041 | Cable tie | N | | | |
| 3 | 4812115911 | Cable tie with holder | 2 | | | |

**Electrical equipment** Cable harness - Flow divider (option)

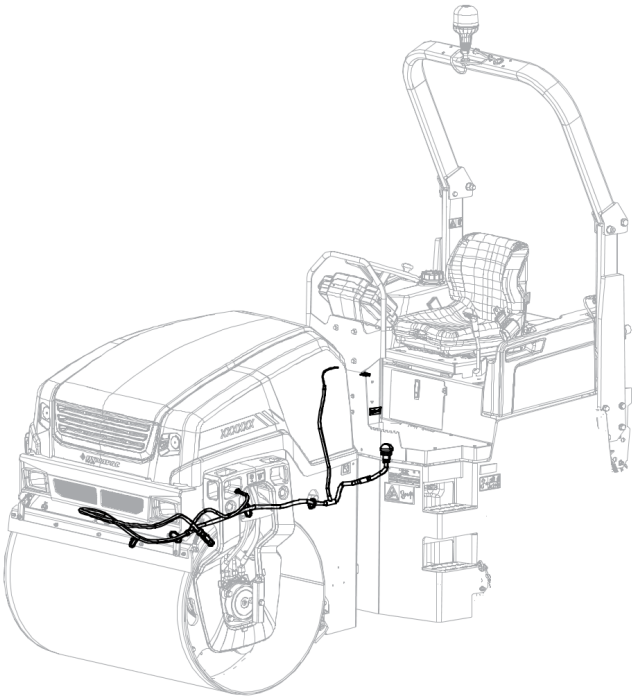

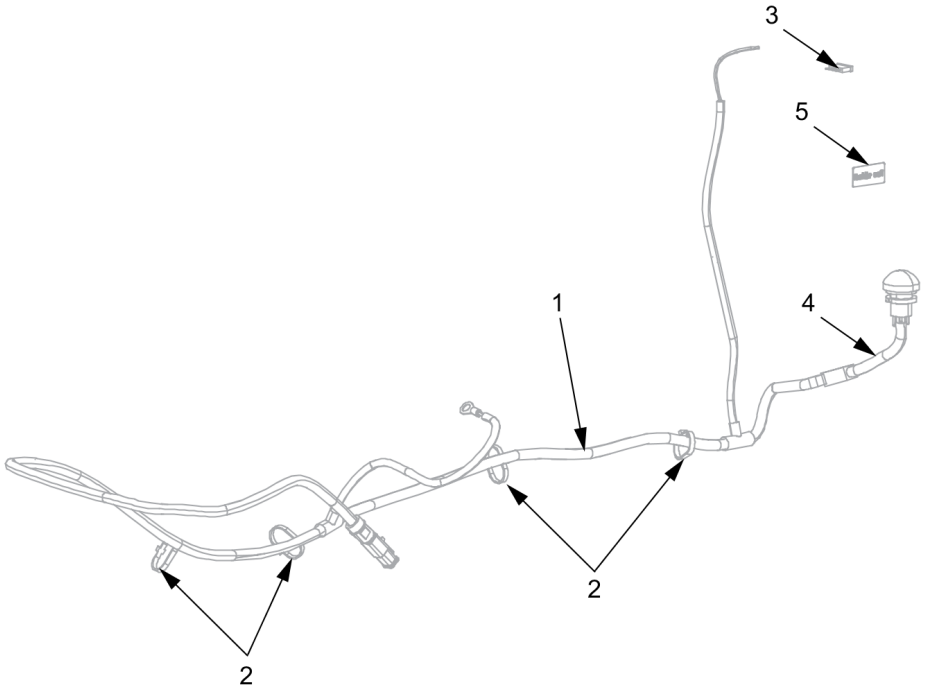

| Item | Part No. | Name | Qty | L | C | SN INFO |
|---|---|---|---|---|---|---|
| 1 | 4812130665 | Cable harness | 1 | | | |
| 2 | 4700313041 | Cable tie | N | | | |
| 3 | 4700901227 | Fuse 10A Red | 1 | | | |
| 4 | 4812127015 | Cable harness | 1 | | | |
| 5 | 4700355981 | Decal | 1 | | | |

**Electrical equipment** Cable harness - Working lights, inclusive Rotating Beacon

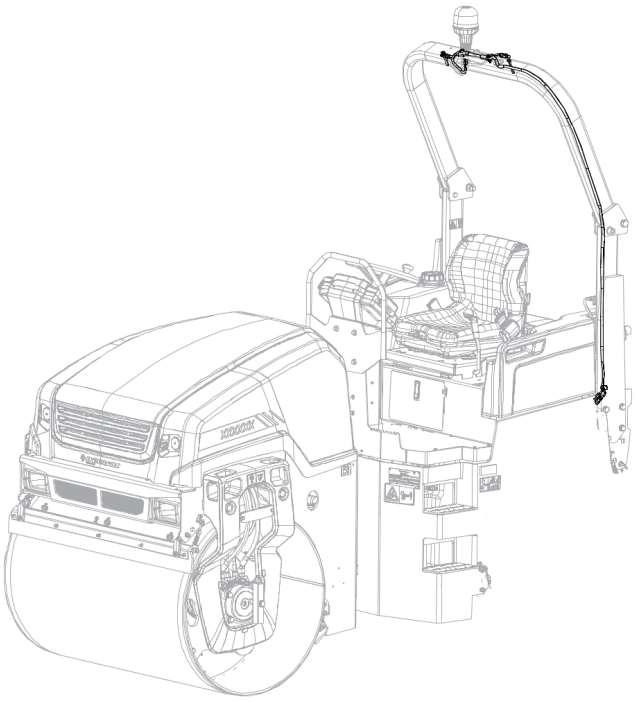

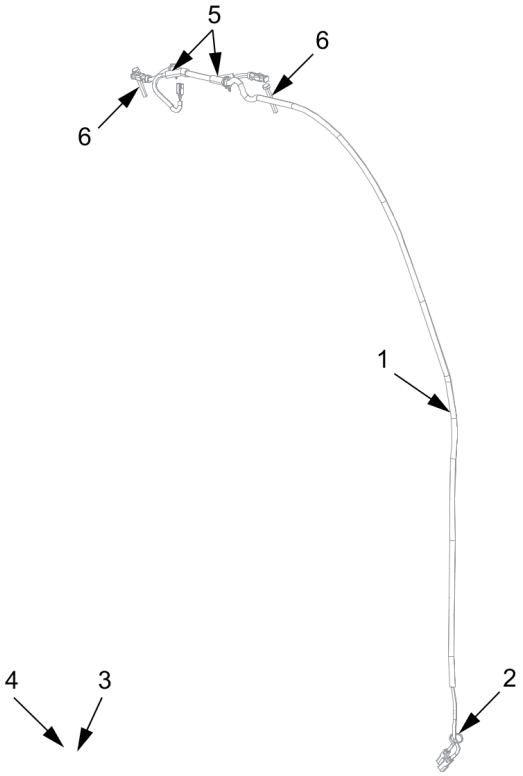

| Item | Part No. | Name | Qty | L | C | SN INFO |
|---|---|---|---|---|---|---|
| 1 | 4812130683 | Cable harness | 1 | | | |
| 2 | 4700313041 | Cable tie | N | | | |
| 3 | 4700901227 | Fuse 10A Red | 1 | | | |
| 4 | 4700381390 | Relay | 1 | | | |
| 5 | 4812115911 | Cable tie with holder | 2 | | | |
| 6 | 4700500149 | Screw | 2 | | | |

**Electrical equipment** Cable harness - Sprinkler rear, Combi

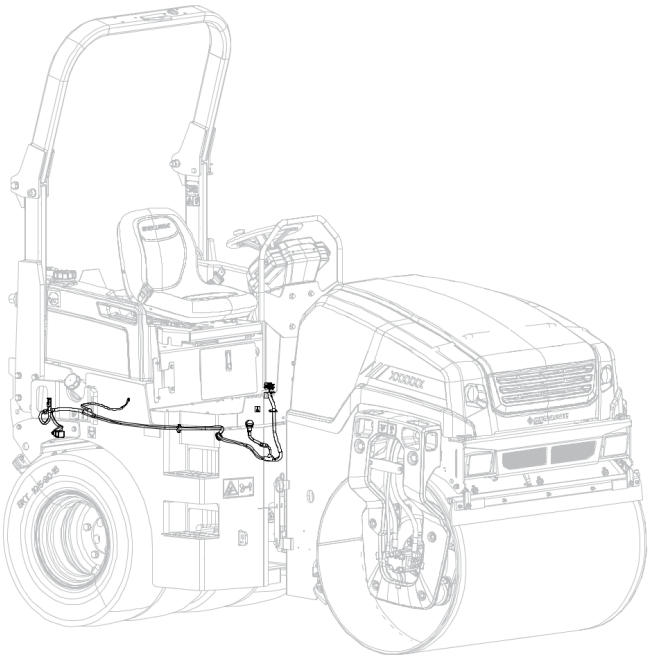

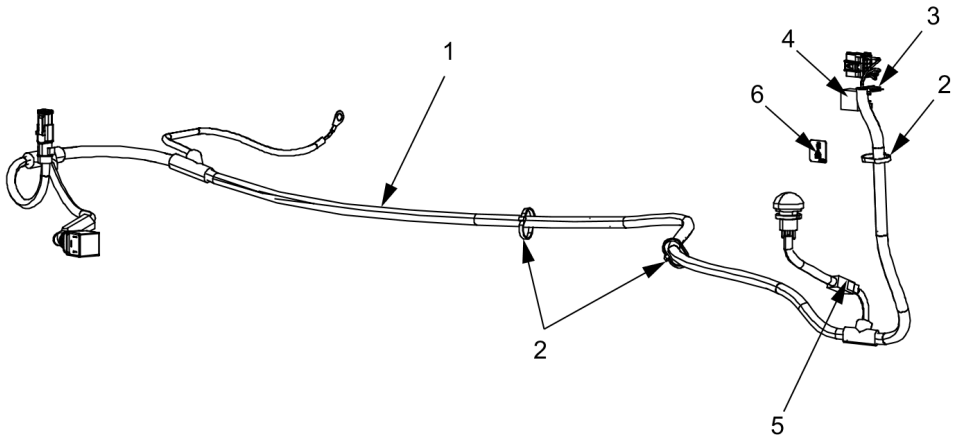

| Item | Part No. | Name | Qty | L | C | SN INFO |
|---|---|---|---|---|---|---|
| 1 | 4812129948 | Cable harness | 1 | | | |
| 2 | 4700313041 | Cable tie | N | | | |
| 3 | 4700901227 | Fuse 10A Red | 1 | | | |
| 4 | 4700381390 | Relay | 1 | | | |
| 5 | 4812127015 | Cable harness | 1 | | | |
| 6 | 4700791342 | Decal "SPRINKLER" Wheels | 1 | | | |

**Electrical equipment** Cable harness - Edge cutter & Chip spreader (option)

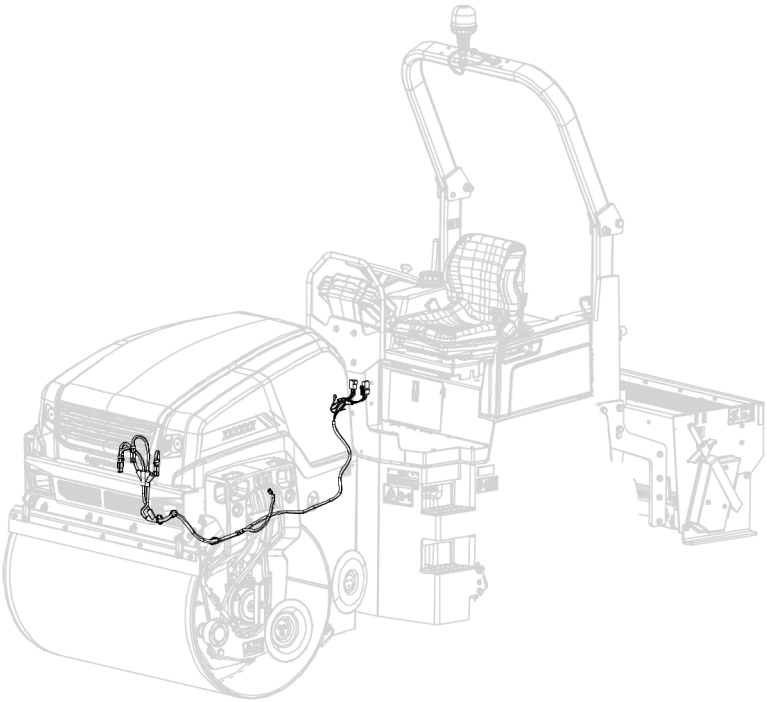

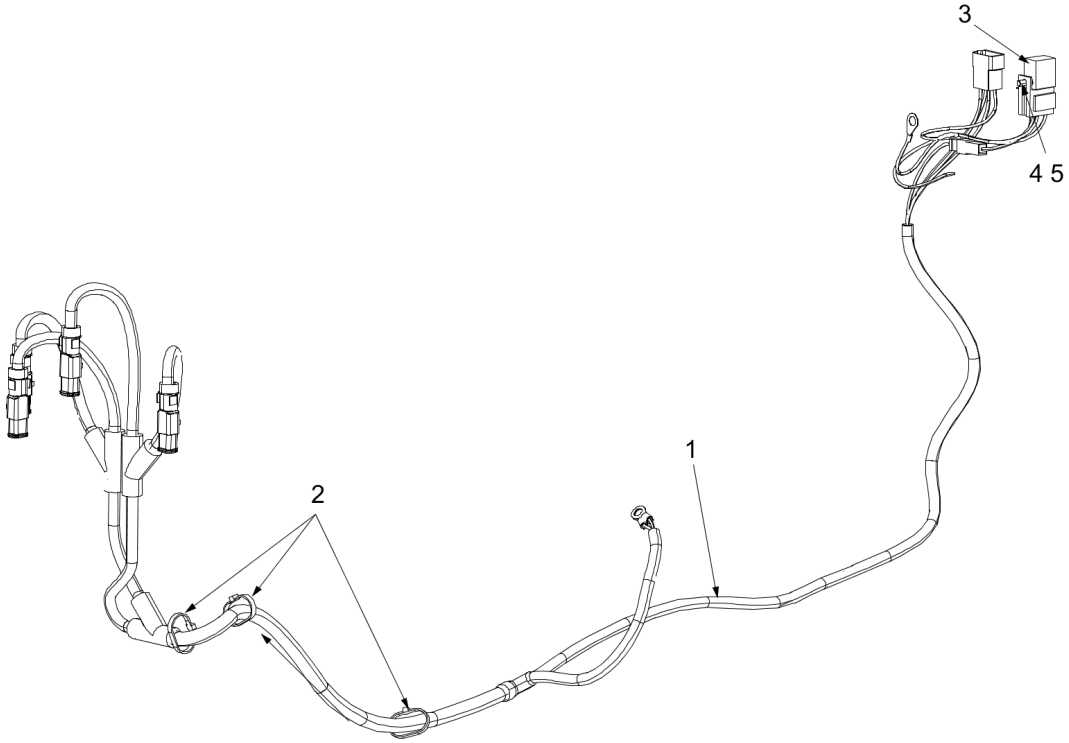

| Item | Part No. | Name | Qty | L | C | SN INFO |
|---|---|---|---|---|---|---|
| 1 | 4812130572 | Cable harness | 1 | | | |
| 2 | 4700313041 | Cable tie | N | | | |
| 3 | 4700381390 | Relay | 1 | | | |
| 4 | 4700904281 | Steel plain washer | 1 | | | |
| 5 | 4700500003 | Hex. screw | 1 | | | |

**Electrical equipment** Cable harness - Seat heater

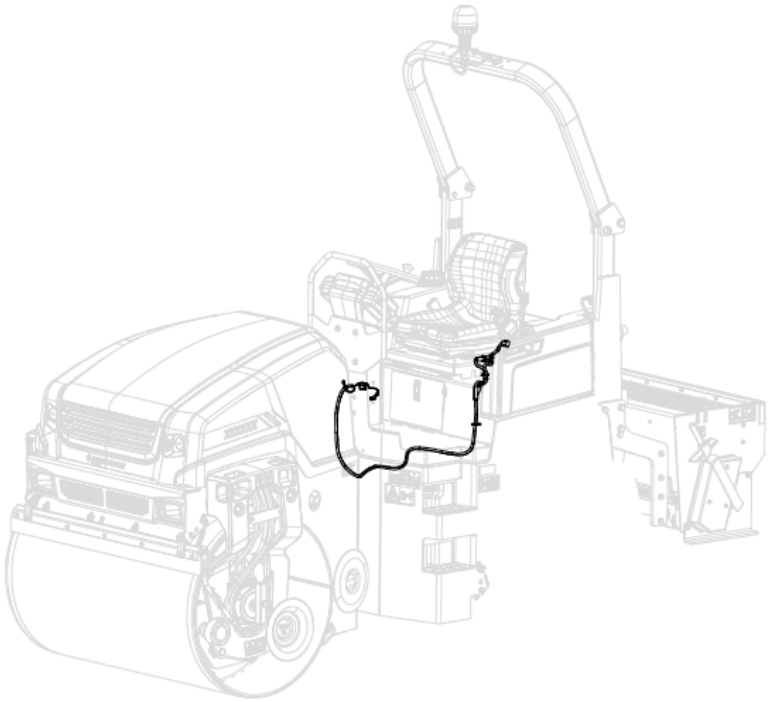

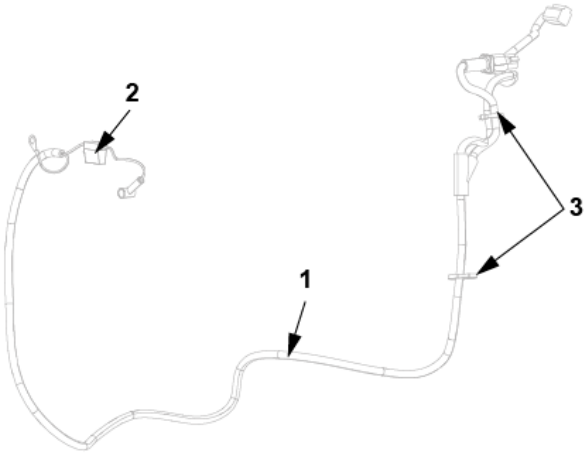

| Item | Part No. | Name | Qty | L | C | SN INFO |
|---|---|---|---|---|---|---|
| 1 | 4812127324 | Cable harness | 1 | | | |
| 2 | 4700901225 | Fuse 5A Tan | 1 | | | |
| 3 | 4700313041 | Cable tie | 2 | | | |

**Electrical equipment** Driving lights (option)

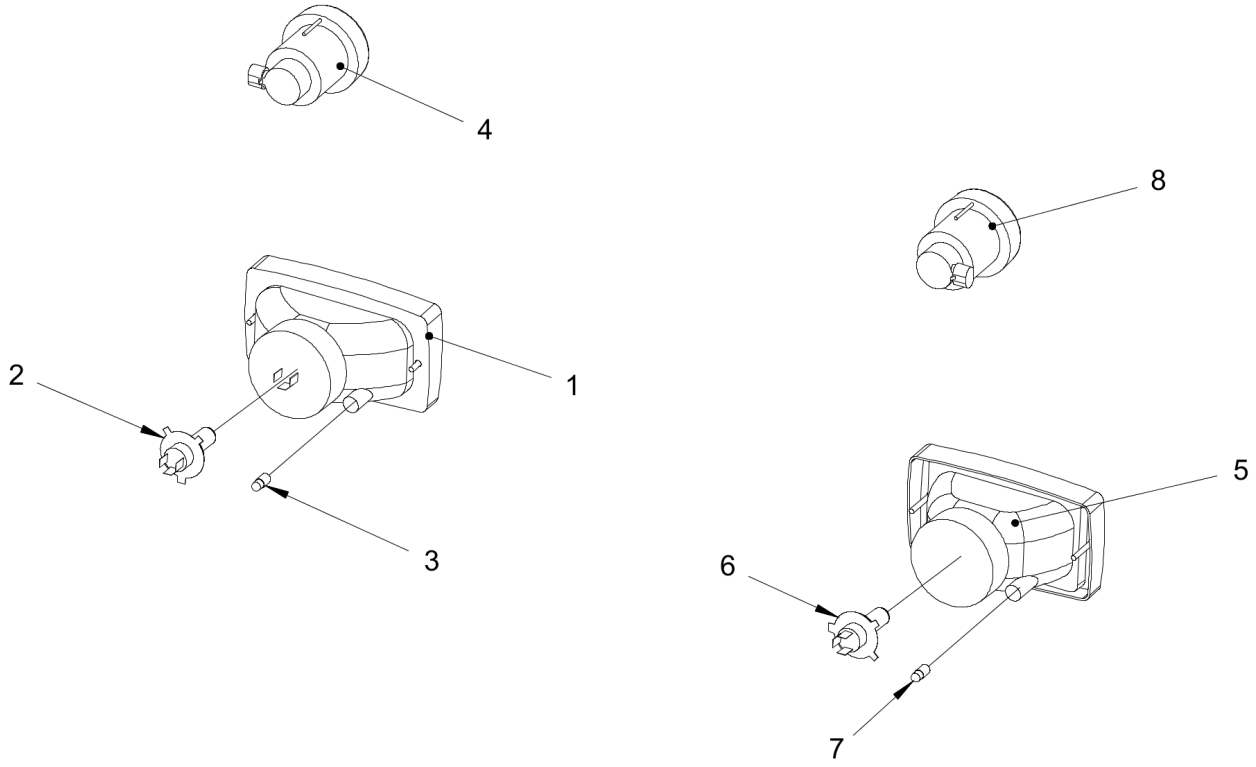

| Item | Part No. | Name | Qty | L | C | SN INFO |
|---|---|---|---|---|---|---|
| 1 | 4700792059 | Headlight left hand asym. with parking light | 2 | | | |
| 2 | 4700900790 | Bulb 60/55w H4 | 2 | | | |
| 3 | 4700985012 | Bulb | 2 | | | |
| 4 | 4700791953 | Direction indicator | 2 | | | |
| 5 | 4700791951 | Headlight right hand asym. with parking light | 2 | | | |
| 6 | 4700900790 | Bulb 60/55w H4 | 2 | | | |
| 7 | 4700985012 | Bulb | 2 | | | |
| 8 | 4700791953 | Direction indicator | 2 | | | |

**Electrical equipment** Working lights (option)

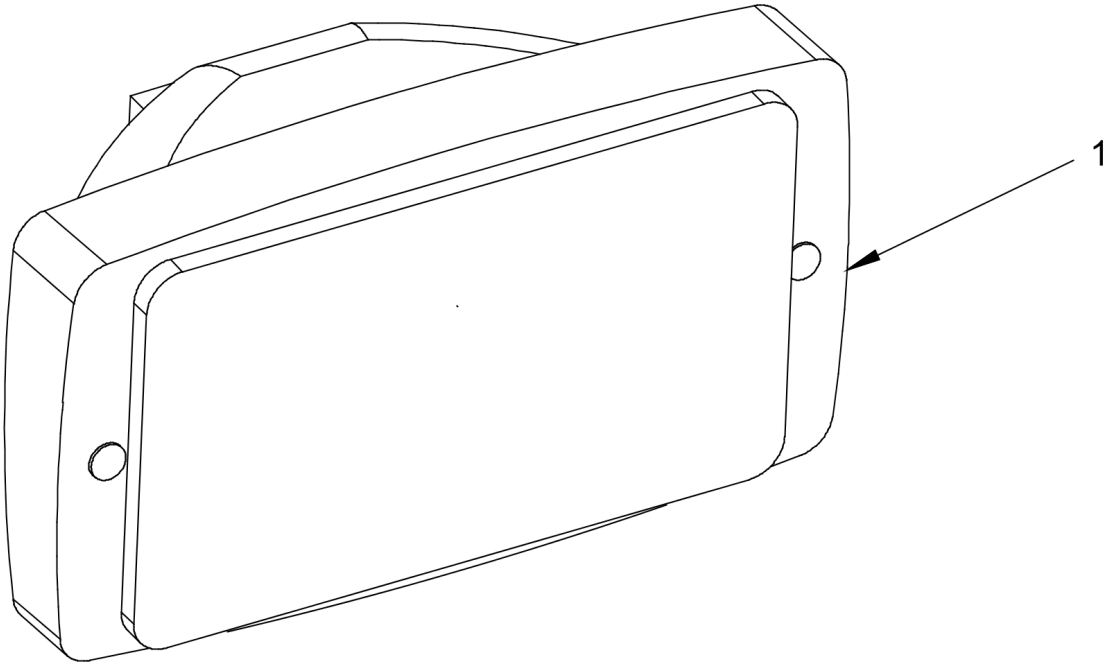

| Item | Part No. | Name | Qty | L | C | SN INFO |
|---|---|---|---|---|---|---|
| 1 | 4700902227 | Work light | 2 | | | |

**Electrical equipment** Working light LED module

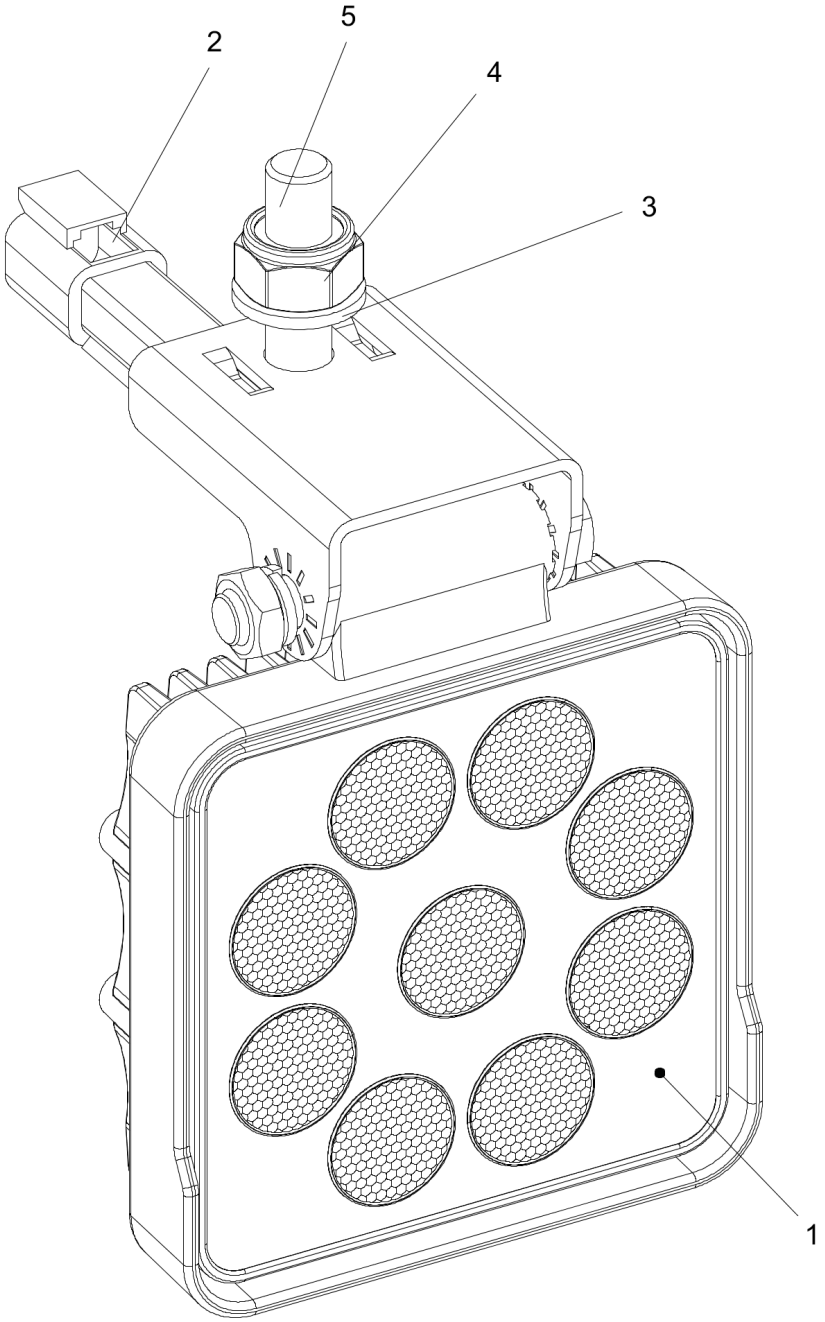

| Item | Part No. | Name | Qty | L | C | SN INFO |
|---|---|---|---|---|---|---|
| 1 | 4812126777 | Working light, LED 15W | 1 | | | |
| 2 | 4700791688 | Connector | 1 | | | |
| 3 | -- | Sensor kit | 1 | | | |
| 4 | -- | Sensor kit | 1 | | | |
| 5 | -- | Sensor kit | 1 | | | |

**Electrical equipment** Working light module S-LED

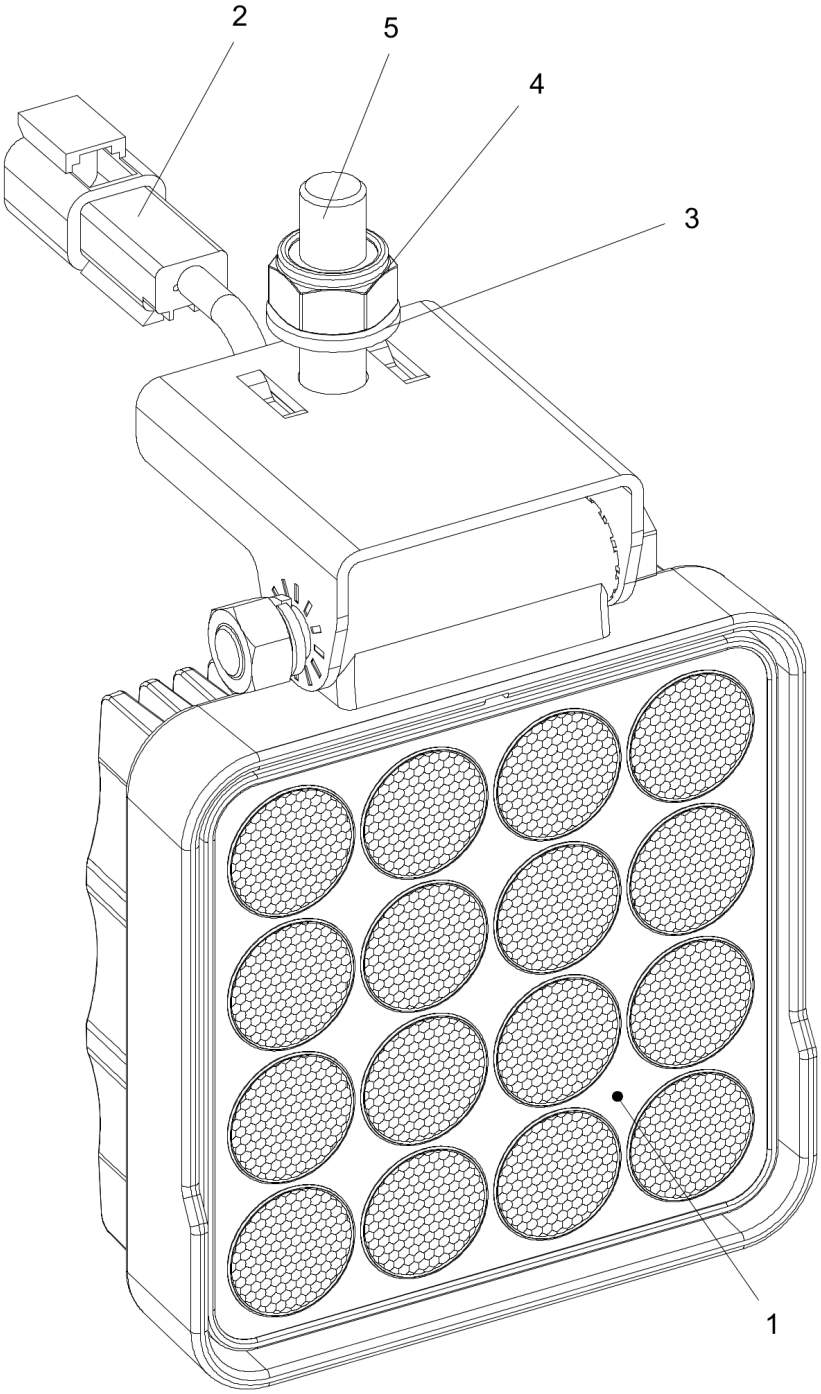

| Item | Part No. | Name | Qty | L | C | SN INFO |
|---|---|---|---|---|---|---|
| 1 | 4812126778 | Working light, LED 25W | 1 | | | |
| 2 | 4700791688 | Connector | 1 | | | |
| 3 | -- | Sensor kit | 1 | | | |
| 4 | -- | Sensor kit | 1 | | | |
| 5 | -- | Sensor kit | 1 | | | |

**Electrical equipment** Direction light module

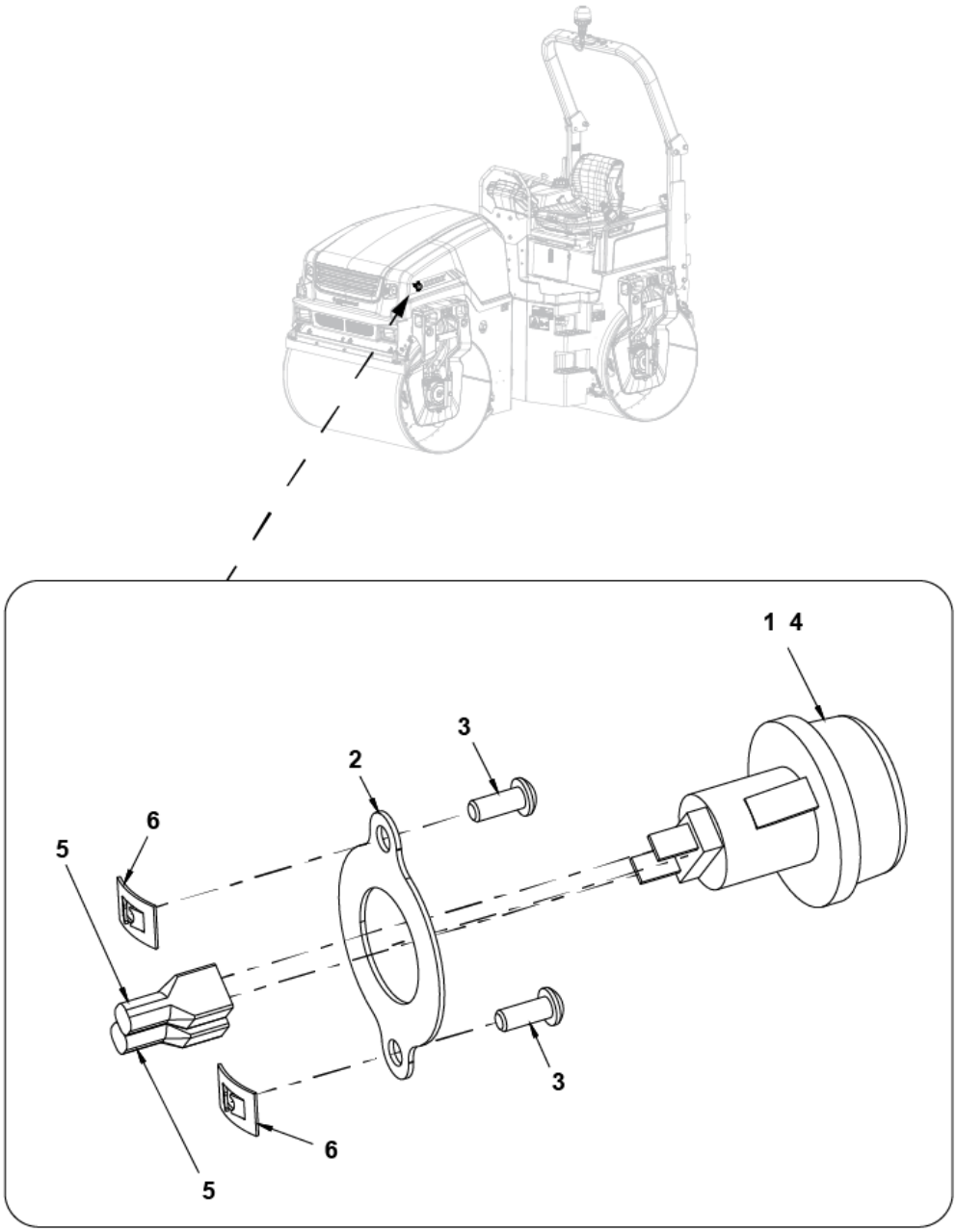

| Item | Part No. | Name | Qty | L | C | SN INFO |
|---|---|---|---|---|---|---|
| 1 | 4700791704 | Side direction light | 2 | | | |
| 2 | 4700388382 | Holder side light | 2 | | | |
| 3 | 4700791643 | Screw | 4 | | | |
| 4 | 4700904889 | Bulb | 2 | | | |
| 5 | 4700960079 | Connector | 4 | | | |
| 6 | 4700791971 | Quick lock nut | 4 | | | |

**Electrical equipment** Registration plate light

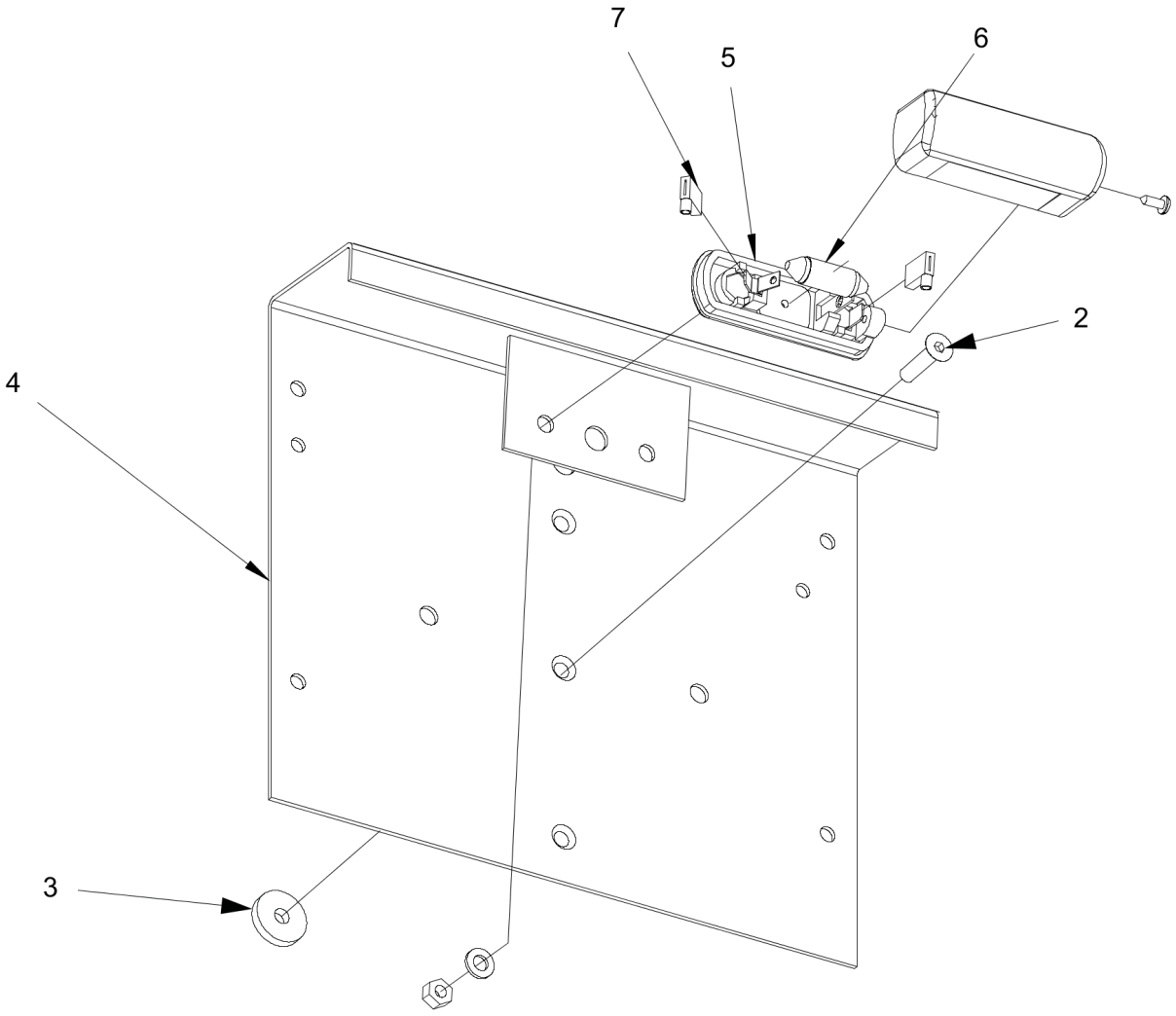

| Item | Part No. | Name | Qty | L | C | SN INFO |
|---|---|---|---|---|---|---|
| 2 | 4700928784 | Hexagon socket countersunk screw M | 2 | | | |
| 3 | 4700904735 | Steel plain washer | 2 | | | |
| 4 | 4700355797 | Registration plate | 1 | | | |
| 5 | 4700929455 | Registration-plate light | 1 | | | |
| 6 | 4700985013 | Bulb | 1 | | | |
| 7 | 4700792035 | Push-on terminal 90 | 2 | | | |

**Drivers platform** Sprinkler tank

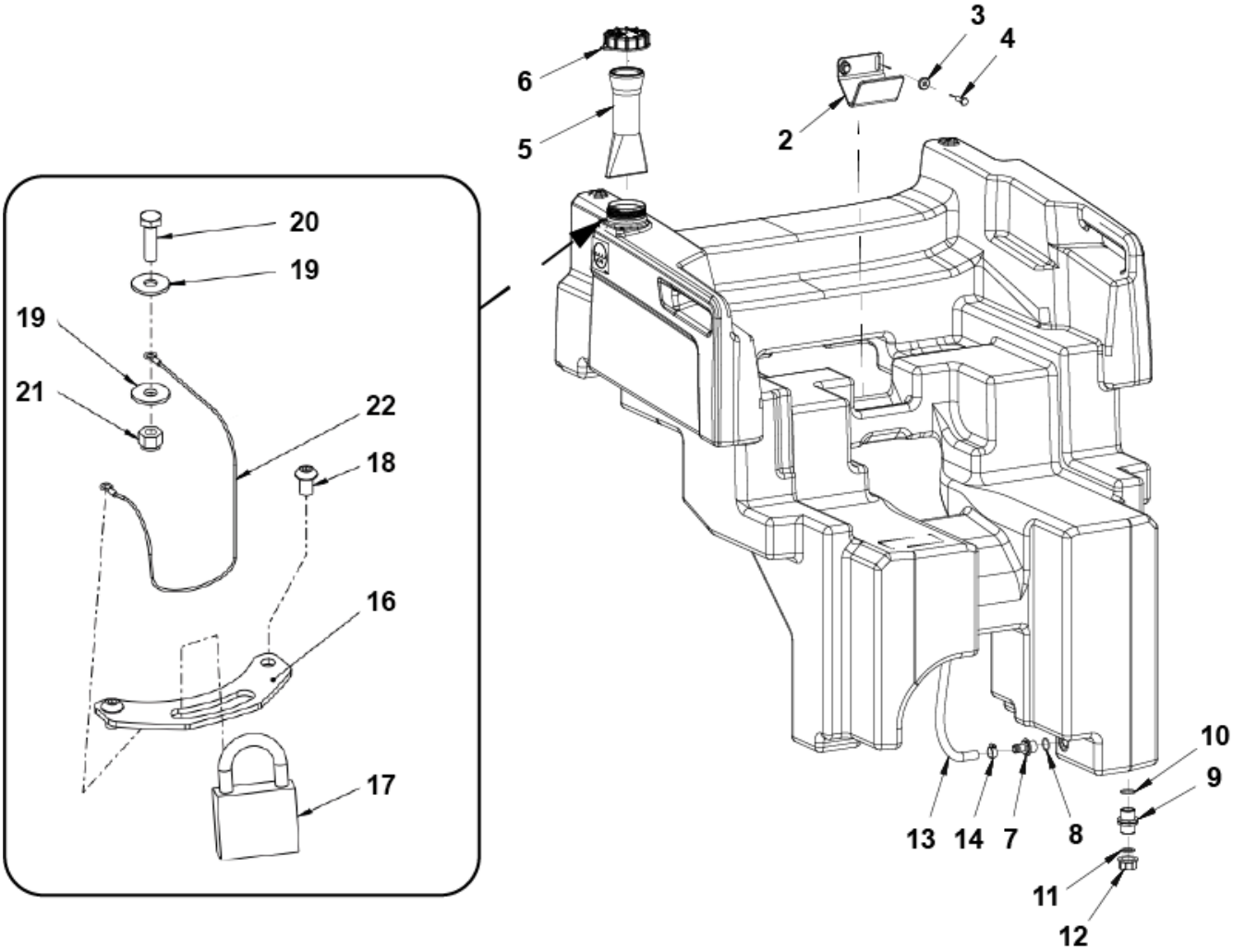


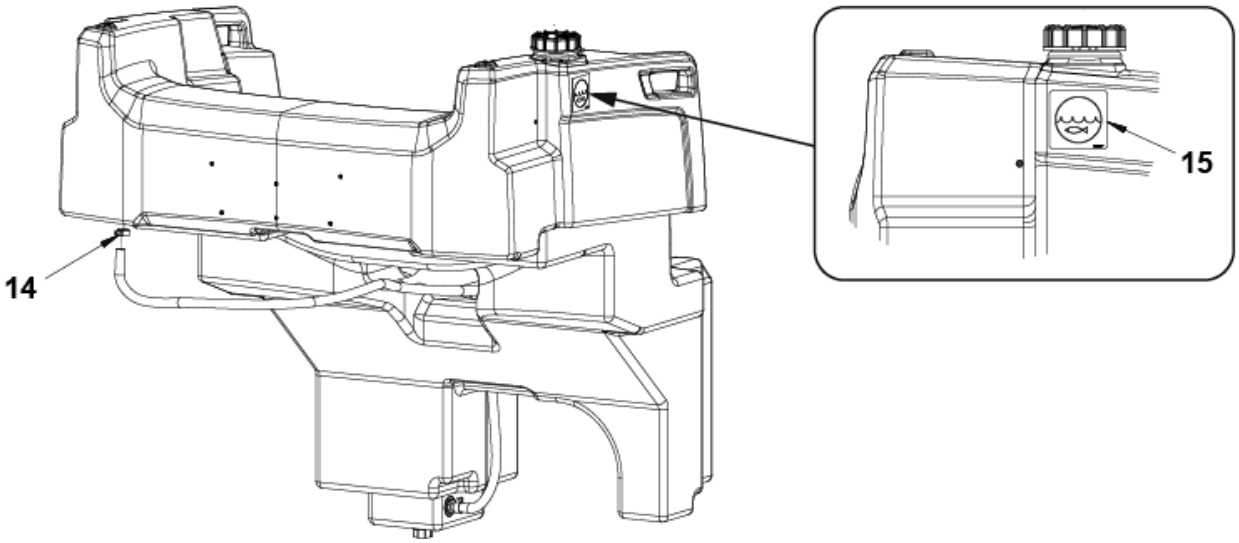

| Item | Part No. | Name | Qty | L | C | SN INFO |
|---|---|---|---|---|---|---|
| 1 | 4812130036 | Water tank | 1 | | | |
| 2 | 4700387935 | Bracket | 1 | | | |
| 3 | 4700904567 | Washer, 10.5x28x6 mm | 2 | | | |
| 4 | 4700500029 | Hexagon head screw M | 2 | | | |
| 5 | 4812125924 | Strainer | 1 | | | |
| 6 | 4700388087 | Tank cap | 1 | | | |
| 7 | 4700396672 | Hose connection, plastic | 1 | | | |
| 8 | 4700160313 | O-ring 70 | 1 | | | |
| 9 | 4812125982 | Nipple | 1 | | | |
| 10 | 4700160318 | O-ring 70 | 1 | | | |
| 11 | 4812125984 | Gasket | 1 | | | |
| 12 | 4812125983 | Cap | 1 | | | |
| 13 | 4812112074 | Plastic hose (x m) | 2.0 M | | | |
| 14 | 4700313003 | Hose clamp | 2 | | | |
| 15 | 4700991657 | Decal "WATER" | 1 | | | |

**Drivers platform** Emulsion tank module

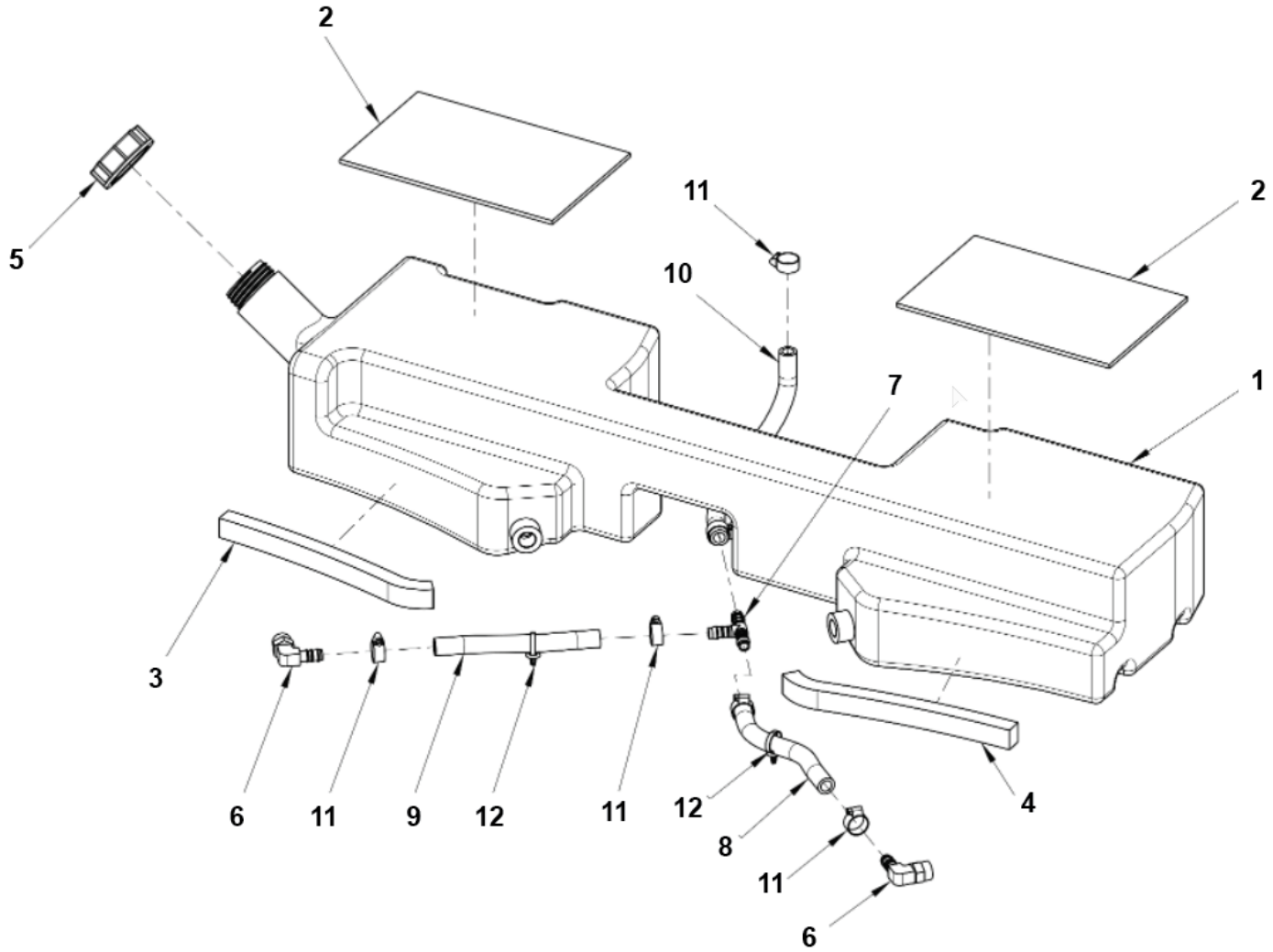


| Item | Part No. | Name | Qty | L | C | SN INFO |
|---|---|---|---|---|---|---|
| 1 | 4812130037 | Emulsion tank | 1 | | | |
| 2 | 4812124988 | Rubber cloth | 2 | | | |
| 3 | 4700202042 | Rubber strip | 0.3 | | | |
| 4 | 4700202042 | Rubber strip | 0.3 | | | |
| 5 | 4700902268 | Cap | 1 | | | |
| 6 | 4700924996 | Hose connection | 2 | | | |
| 7 | 4700923735 | Hose connection | 1 | | | |
| 8 | 4812112074 | Plastic hose (x m) | 0.23 | | | |
| 9 | 4812112074 | Plastic hose (x m) | 0.20 | | | |
| 10 | 4812112074 | Plastic hose (x m) | 0.35 | | | |
| 11 | 4700313003 | Hose clamp | 6 | | | |

| Item | Part No. | Name | Qty | L | C | SN INFO |
|---|---|---|---|---|---|---|
| 12 | 4812115911 | Cable tie with holder | 2 | | | |

**Drivers platform** ROPS foldable

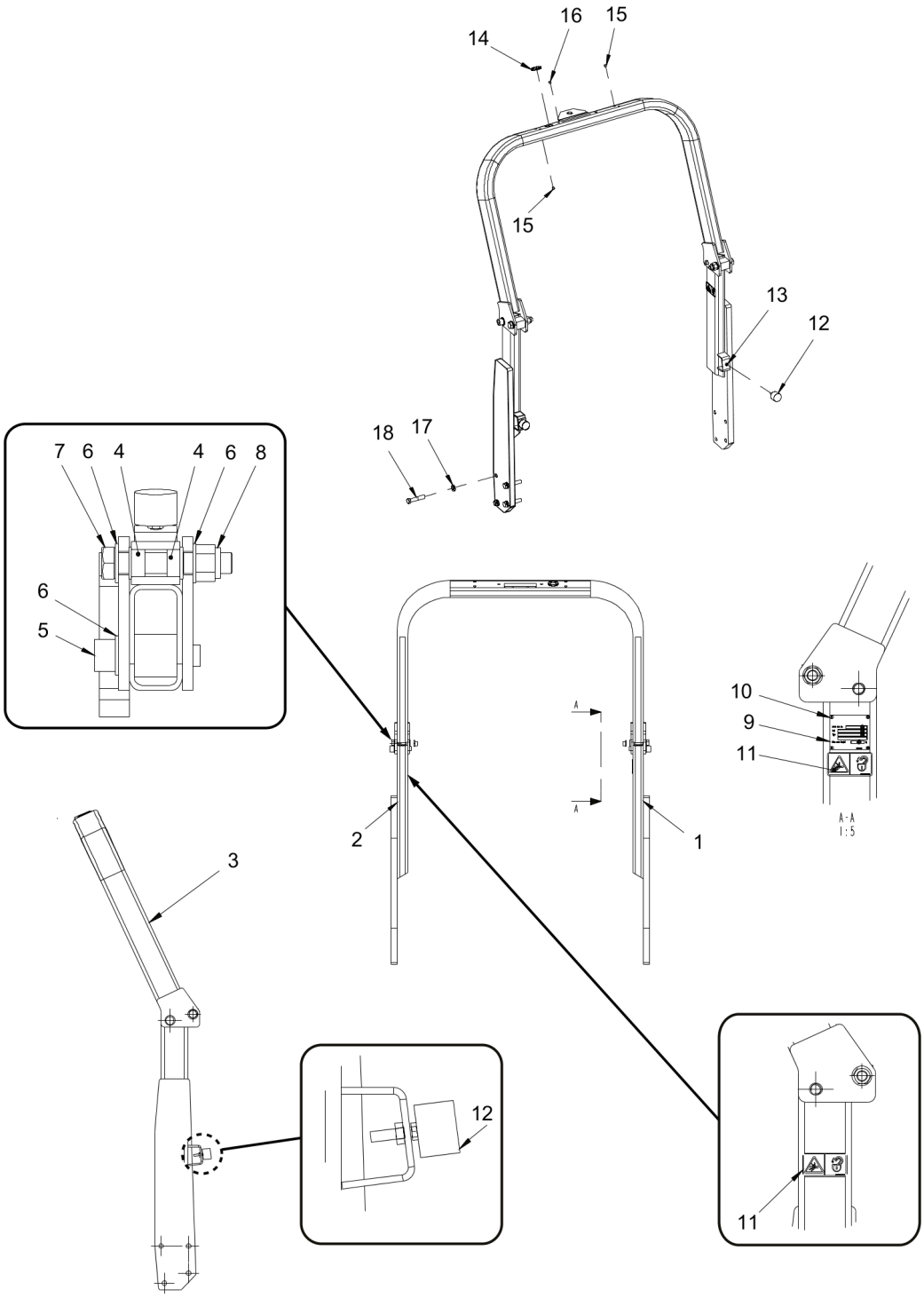

| Item | Part No. | Name | Qty | L | C | SN INFO |
|---|---|---|---|---|---|---|
| 1 | | ROPS, lower part | 1 | | | |
| 2 | | ROPS, lower part | 1 | | | |
| 3 | | ROPS, upper part | 1 | | | |
| 4 | 4700904574 | Bushing | 4 | | | |
| 5 | 0211110375 | Hexagon head screw | 2 | | | |
| 6 | 4700904233 | Steel plain washer | 6 | | | |
| 7 | 4700901381 | Screw | 2 | | | |
| 8 | 0291112843 | Lock nut M20 | 2 | | | |
| 9 | 4700370803 | Sign, rops | 1 | | | |
| 10 | 4700624018 | Blind rivet | 4 | | | |
| 11 | 4700908229 | Safety decal | 2 | | | |
| 12 | 4700288357 | Shock absorber | 2 | | | |
| 13 | 4700573008 | Nut M8 | 2 | | | |
| 14 | 4812114465 | Grommet with membrane | 1 | | | |
| 15 | 4700792083 | Protective plug | 8 | | | |
| 16 | 4700902919 | Plug | 2 | | | |
| 17 | 4700904558 | Steel plain washer 17x30x6 mm 300 HV | 8 | | | |
| 18 | 4700947700 | Spacer | 8 | | | |

**Drivers platform** Platform

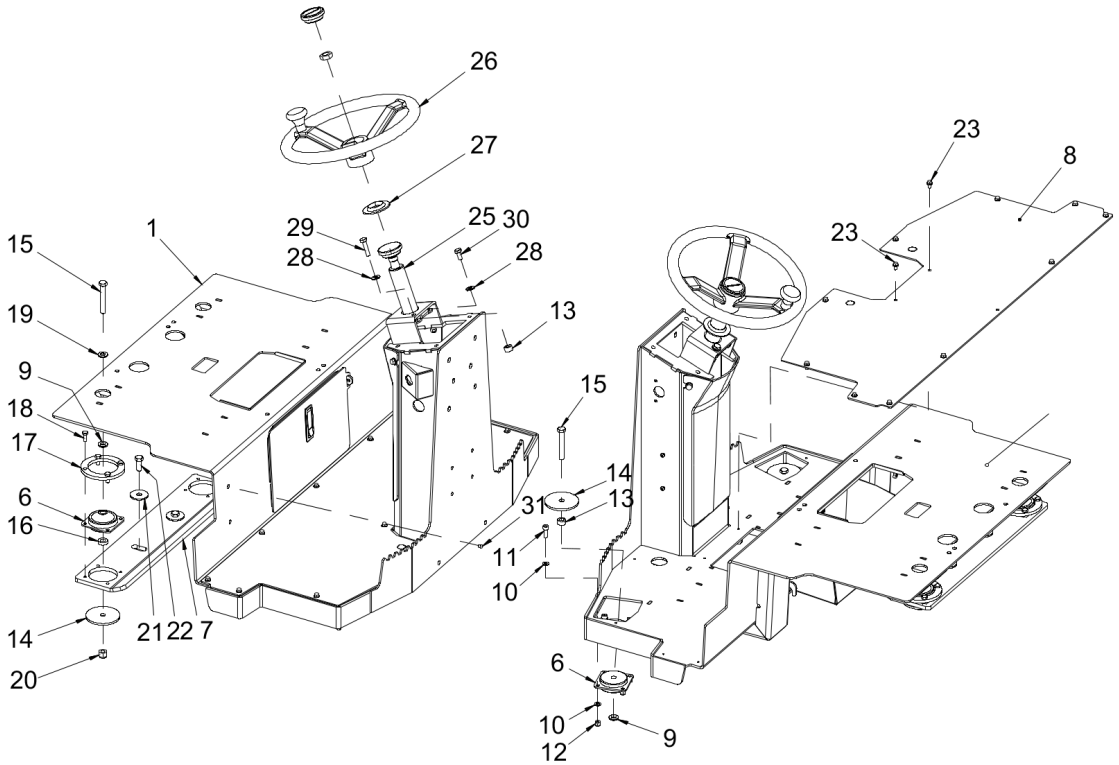


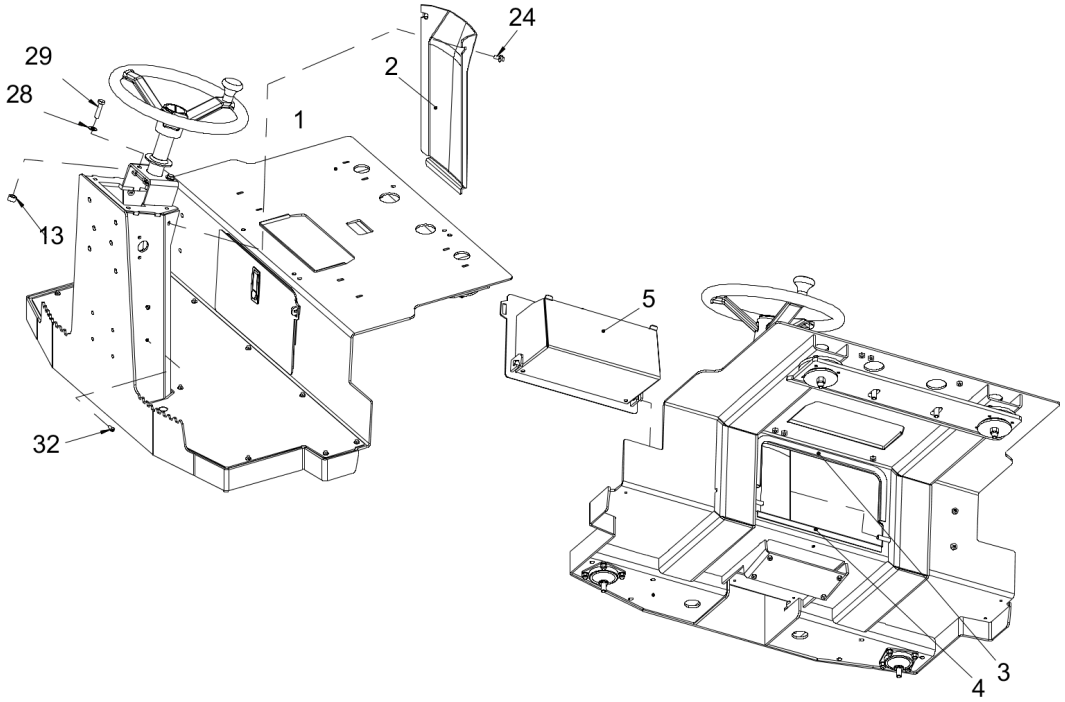

| Item | Part No. | Name | Qty | L | C | SN INFO |
|---|---|---|---|---|---|---|
| 1 | | Platform | 1 | | | |
| 2 | 4812125902 | Front cover | 1 | | | |
| 3 | 4700902379 | Edge trim | 0.60 M | | | |
| 4 | 4700902379 | Edge trim | 0.36 M | | | |
| 5 | 4812125914 | Tool box | 1 | | | |
| 6 | 4700902797 | Shock absorber | 4 | | | |
| 7 | 4812125852 | Bracket | 1 | | | |
| 8 | 4812129992 | Floor plate | 1 | | | |
| 9 | 4700904703 | Plain washer 13x24x4 mm | 4 | | | |
| 10 | 4700904229 | Steel plain washer 8.4X16X1.5 | 16 | | | |
| 11 | 4700508019 | Cylinder screw | 8 | | | |
| 12 | 4700586003 | Lock nut M8 | 8 | | | |
| 13 | 4700355869 | Spacer sleeve | 4 | | | |
| 14 | 4700358232 | Washer | 4 | | | |
| 15 | 4700500196 | Screw M12-1,75x80 8.8 | 4 | | | |
| 16 | 4700902892 | Washer | 2 | | | |
| 17 | 4812125886 | Backup ring | 2 | | | |
| 18 | 4700500053 | Screw, M8x20 mm 8.8 A2K | 8 | | | |
| 19 | 4700904231 | Steel plain washer | 2 | | | |
| 20 | 4700586019 | Lock nut M12 | 2 | | | |
| 21 | 4700791165 | Washer, 13 x 45 x 4 mm, 0.51 x 1.77 x 0.16 A2K | 2 | | | |
| 22 | 4700500046 | Hex. head screw M12x030H | 2 | | | |
| 23 | 4700902989 | Hexagon screw with flange M6x12 | 13 | | | |
| 24 | 4700901832 | Hexagon screw with flange M | 2 | | | |
| 25 | 4700902123 | Steering column | 1 | | | |
| 26 | 4700372964 | Steering wheel | 1 | | | |
| 27 | 4700928830 | Rubber part | 1 | | | |
| 28 | 4700904230 | Plain washer M10 10.5X22X2.0 | 4 | | | |
| 29 | 4700500240 | Hex head screw | 2 | | | |
| 30 | 4700500048 | Hex. Head screw | 2 | | | |
| 31 | 4700926215 | Protective plug | 2 | | | |
| 32 | 4700904206 | Hex.sock.button h.cap screw M | 2 | | | |

**Drivers platform** Hand rail

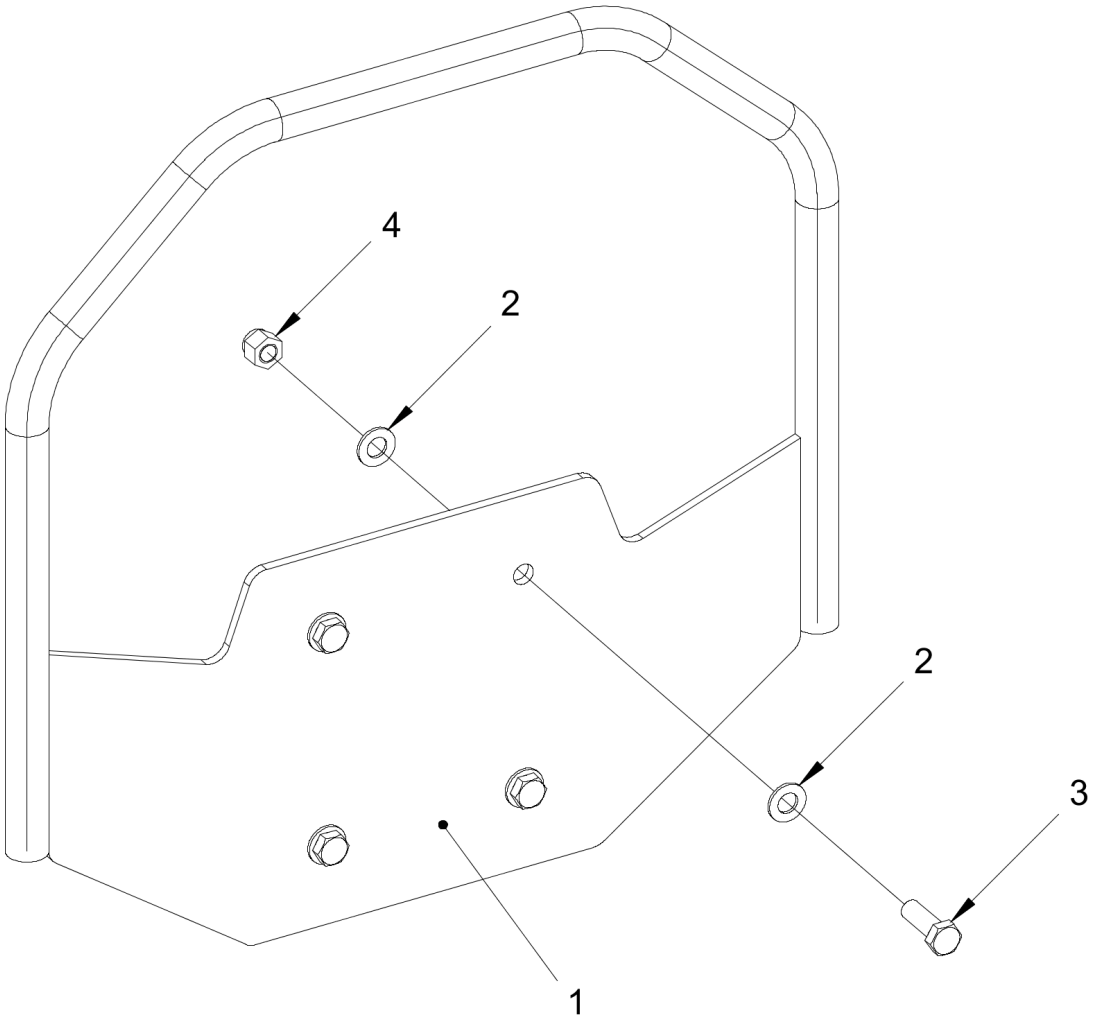

| Item | Part No. | Name | Qty | L | C | SN INFO |
|---|---|---|---|---|---|---|
| 1 | 4812125631 | Hand rail | 1 | | | |
| 2 | 4700904231 | Steel plain washer | 8 | | | |
| 3 | 4700947689 | Hexagon Head Screw, M12x40H, 10.9, Geomet | 4 | | | |
| 4 | 4812110968 | Lock nut | 4 | | | |

**Drivers platform** Canopy

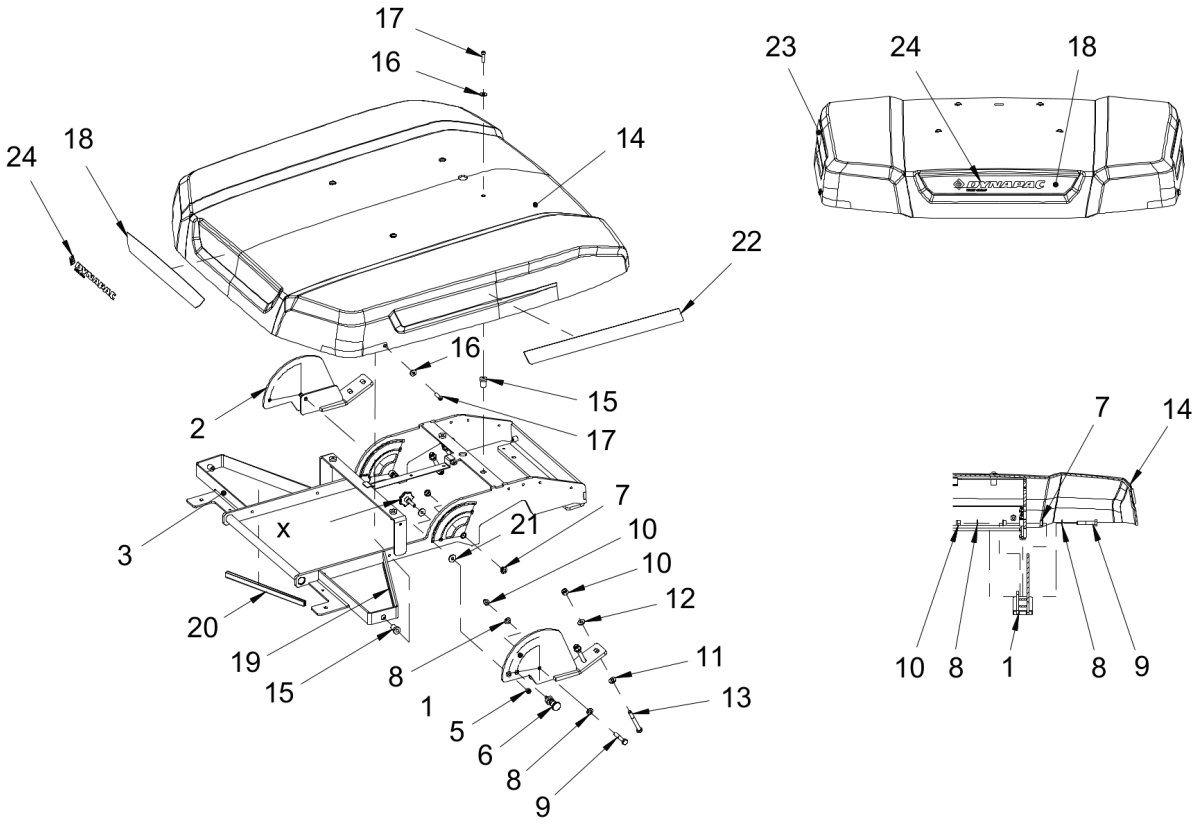

| Item | Part No. | Name | Qty | L | C | SN INFO |
|---|---|---|---|---|---|---|
| 1 | 4812130316 | Bracket | 1 | | | |
| 2 | 4812130317 | Bracket | 1 | | | |
| 3 | 4812128184 | Frame | 1 | | | |
| 4 | 4700791715 | Hand knob | 2 | | | |
| 5 | 4700586003 | Lock nut M8 | 2 | | | |
| 6 | 4812126529 | Locking pin | 1 | | | |
| 7 | 4700792380 | Plastic bushing | 4 | | | |
| 8 | 4700904570 | Steel plain washer | 4 | | | |
| 9 | 4700500032 | Hexagon Screw M | 2 | | | |
| 10 | 4700586018 | Hex bolt M06X020H 8.8 A2K | 6 | | | |
| 11 | 4700904557 | Steel plain washer | 4 | | | |
| 12 | 4700904230 | Plain washer M10 10.5X22X2.0 | 4 | | | |
| 13 | 4700500192 | Hexagon head screw M | 4 | | | |
| 14 | 4812126283 | Canopy | 1 | | | |
| 15 | 4812113177 | Rubber nut | 8 | | | |
| 16 | 4700791304 | Steel plain washer | 8 | | | |
| 17 | 4700792107 | Hex.sock.button h.cap screw M | 8 | | | |
| 18 | 4812128167 | Decal, cosmetic | 1 | | | |
| 19 | 4700902379 | Edge trim | 0.300 M | | | |
| 20 | 4700902379 | Edge trim | 0.300 M | | | |
| 21 | 4700601003 | Washer, 8,4x25x2 mm | 4 | | | |
| 22 | 4812128236 | Decal, cosmetic | 1 | | | |
| 23 | 4812128221 | Decal, cosmetic | 1 | | | |
| 24 | 4812127713 | Decal FAYAT DYNAPAC 280 WH | 1 | | | |

**Drivers platform** Slideable seat

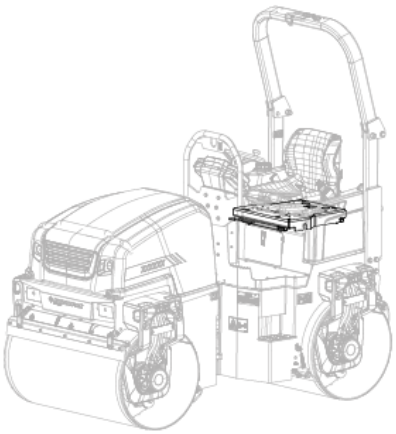

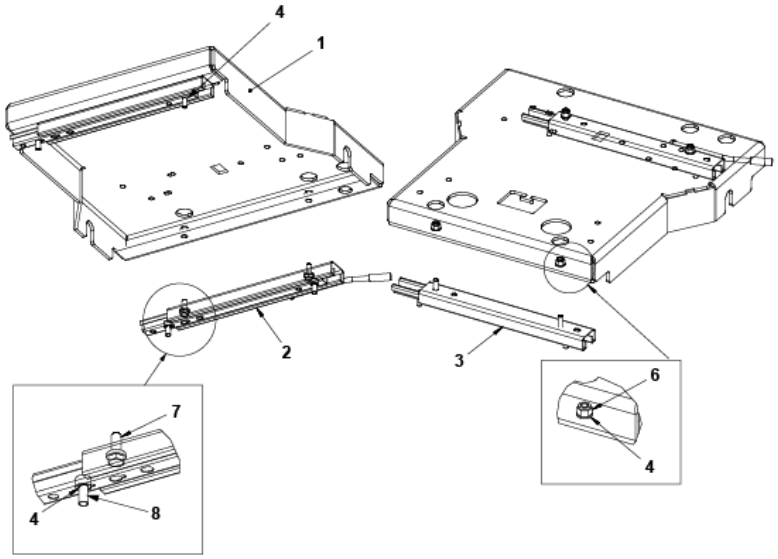

| Item | Part No. | Name | Qty | L | C | SN INFO |
|---|---|---|---|---|---|---|
| 1 | 4812126021 | Seat frame | 1 | | | |
| 2 | 4700909535 | Sliding rail with handle | 1 | | | |
| 3 | 4700909536 | Sliding rail | 1 | | | |
| 4 | 4700904556 | Steel plain washer | 8 | | | |
| 6 | 4700586003 | Lock nut M8 | 4 | | | |
| 7 | 4700500053 | Screw, M8x20 mm 8.8 A2K | 4 | | | |
| 8 | 4700508092 | Hexagon socket head cap screw M | 4 | | | |

**Drivers platform** Fixed seat

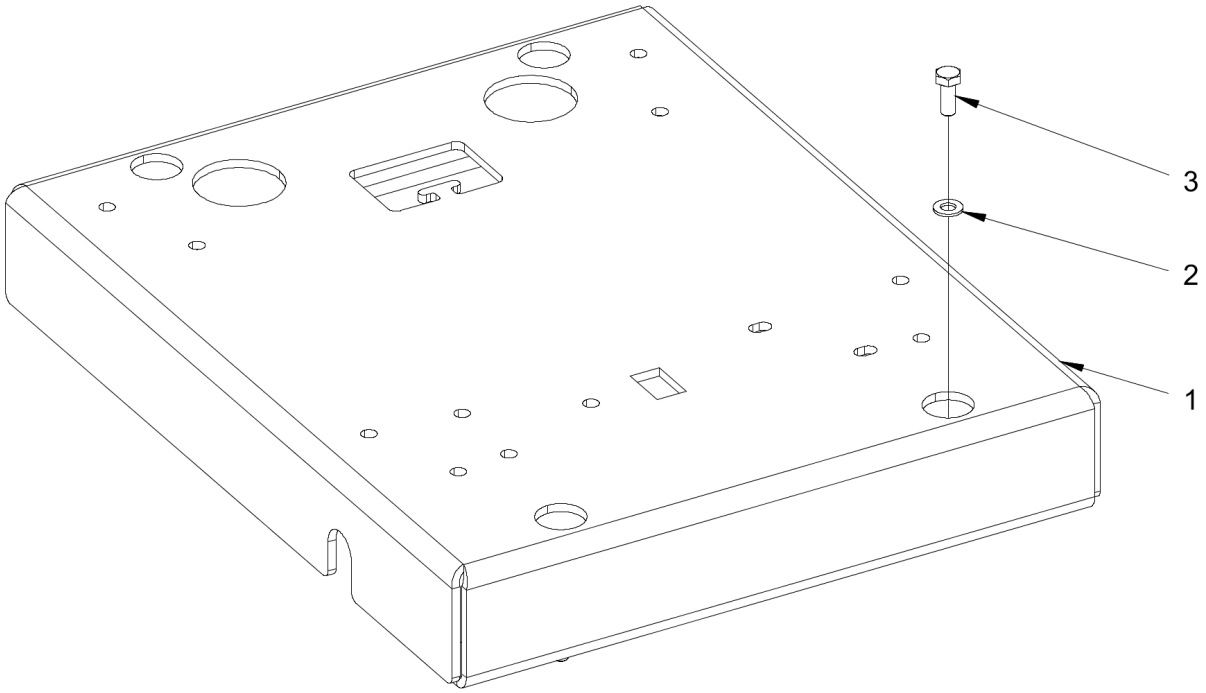

| Item | Part No. | Name | Qty | L | C | SN INFO |
|---|---|---|---|---|---|---|
| 1 | 4812126022 | Seat frame | 1 | | | |
| 2 | 4700904229 | Steel plain washer 8.4X16X1.5 | 4 | | | |
| 3 | 4700500053 | Screw, M8x20 mm 8.8 A2K | 4 | | | |

**Drivers platform** Comfort seat with heat module

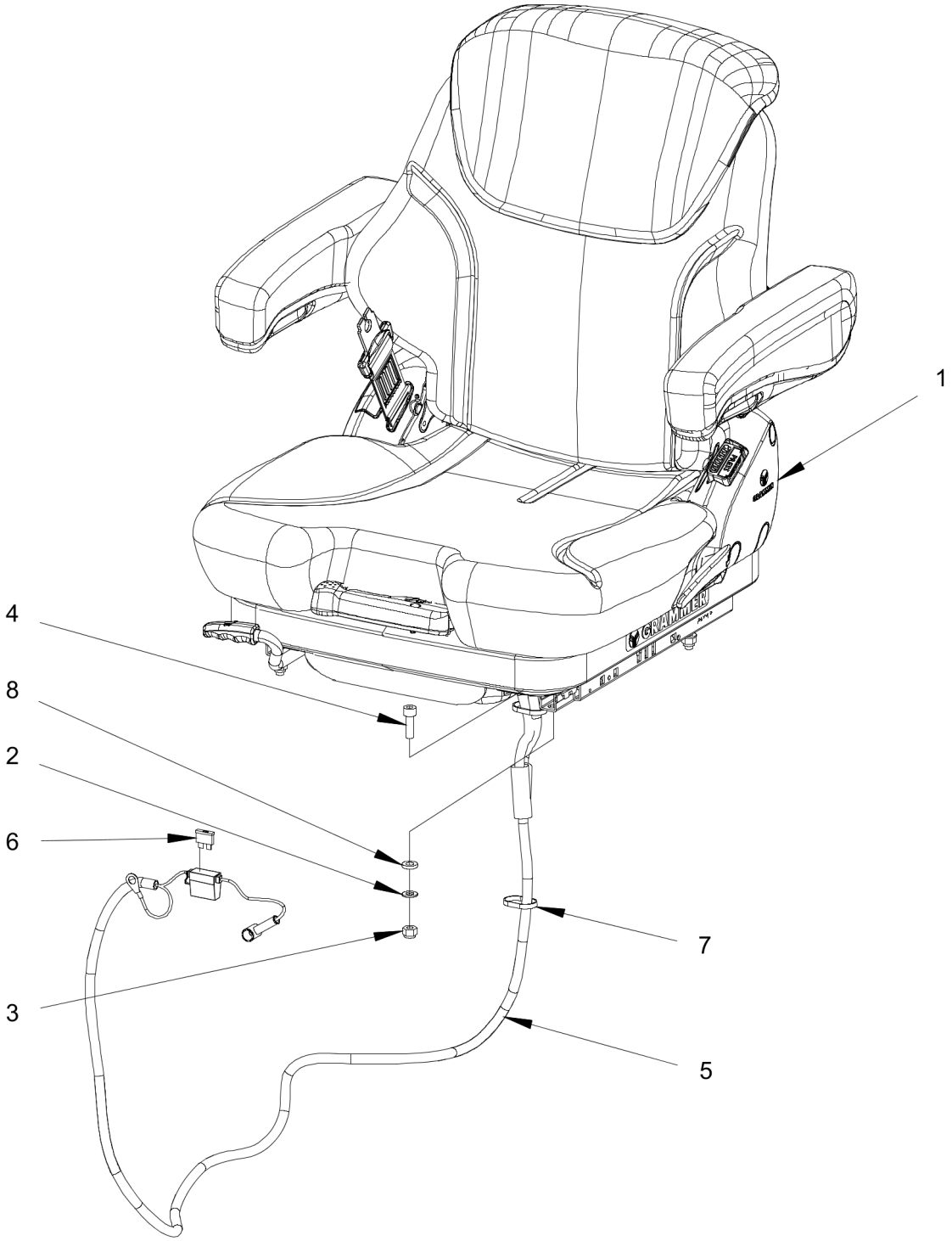

| Item | Part No. | Name | Qty | L | C | SN INFO |
|---|---|---|---|---|---|---|
| 1 | 4812127213 | Comfort seat, with heat module | 1 | | | |
| 1.1 | 4812162777 | Seat switch | 1 | | | |
| 2 | 4700904229 | Steel plain washer 8.4X16X1.5 | 4 | | | |
| 3 | 4700586003 | Lock nut M8 | 4 | | | |
| 4 | 4700508019 | Cylinder screw | 4 | | | |
| 5 | 4812127324 | Cable harness | 1 | | | |
| 6 | 4700901227 | Fuse 10A Red | 1 | | | |
| 7 | 4700313041 | Cable tie | N | | | |
| 8 | 4700904556 | Steel plain washer | 4 | | | |

**Drivers platform** Rear view mirror (option)

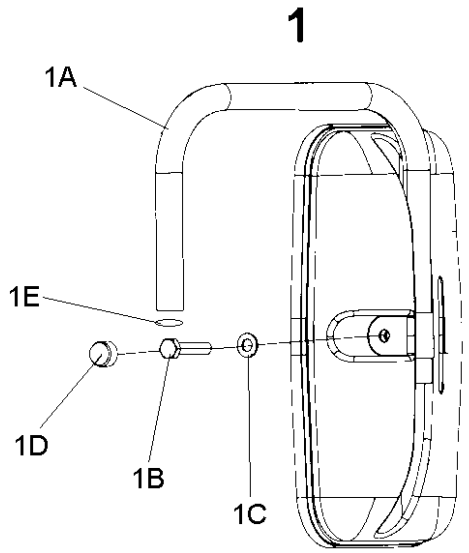


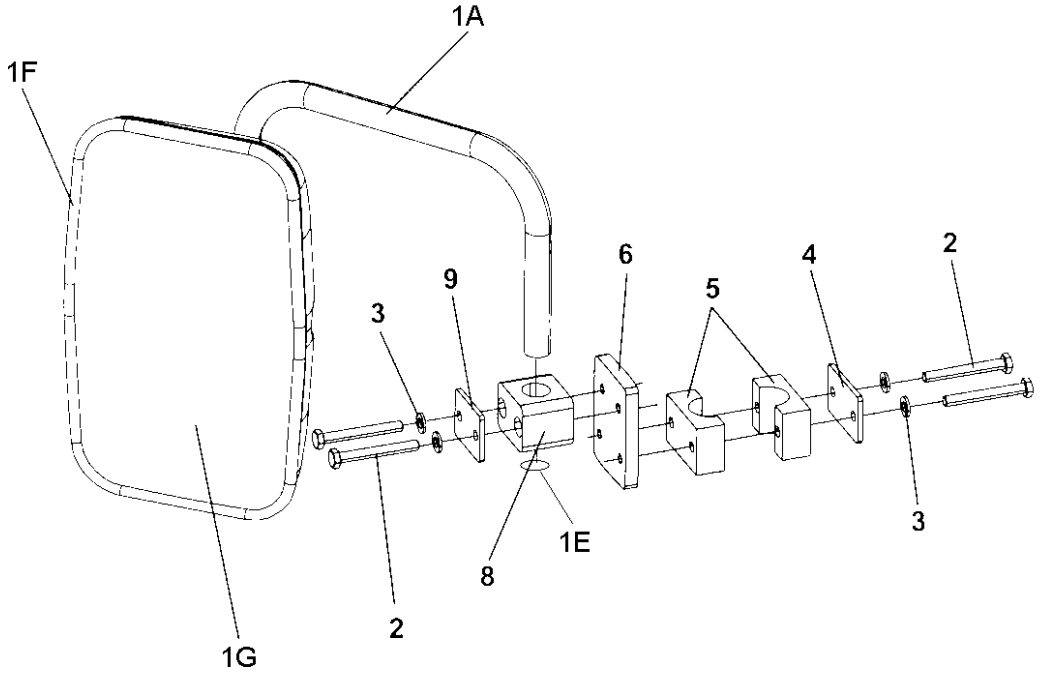

| Item | Part No. | Name | Qty | L | C | SN INFO |
|---|---|---|---|---|---|---|
| 1 | 4700393204 | Rear view mirror | 1 | | | |
| 1-A | 4700359661 | Arm | 1 | | | |
| 1-B | 4700500023 | Screw M8x45 | 1 | | | |
| 1-C | 4700904229 | Steel plain washer 8.4X16X1.5 | 1 | | | |
| 1-D | 4700904203 | Nut protection | 1 | | | |
| 1-E | 4700900519 | Plug | 2 | | | |
| 1-F | 4700393206 | Edge trim | 1 | | | |
| 1-G | 4700903722 | Mirror glass | 1 | | | |
| 2 | 4700500079 | Hexagon head screw M | 4 | | | |
| 3 | 4700904228 | Steel plain washer | 4 | | | |
| 4 | 4700923859 | Cover plate | 1 | | | |
| 5 | 4700902496 | Clamp | 1 | | | |
| 6 | 4812110283 | Bracket | 1 | | | |
| 8 | 4700791453 | Pipe clamp | 1 | | | |
| 9 | 4700791454 | Cover plate | 1 | | | |

**Drivers platform** Control module (1-button) - Right side

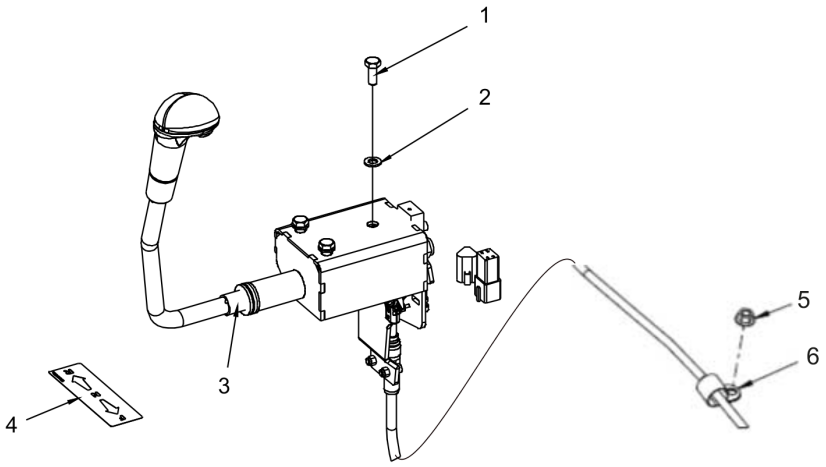

| Item | Part No. | Name | Qty | L | C | SN INFO |
|---|---|---|---|---|---|---|
| 1 | 4700500053 | Screw, M8x20 mm 8.8 A2K | 3 | | | |
| 2 | 4700904229 | Steel plain washer 8.4X16X1.5 | 3 | | | |
| 3 | 4812130902 | F/R lever (1 button, single), cpl. | 1 | | | |
| 4 | 4812130376 | Decal, FNR lever | 1 | | | |
| 5 | 4700792817 | Hexagon nut with flange | 1 | | | |
| 6 | 4700921161 | Pipe clamp | 1 | | | |

**Drivers platform** 4812130902 Control (1-button, single)

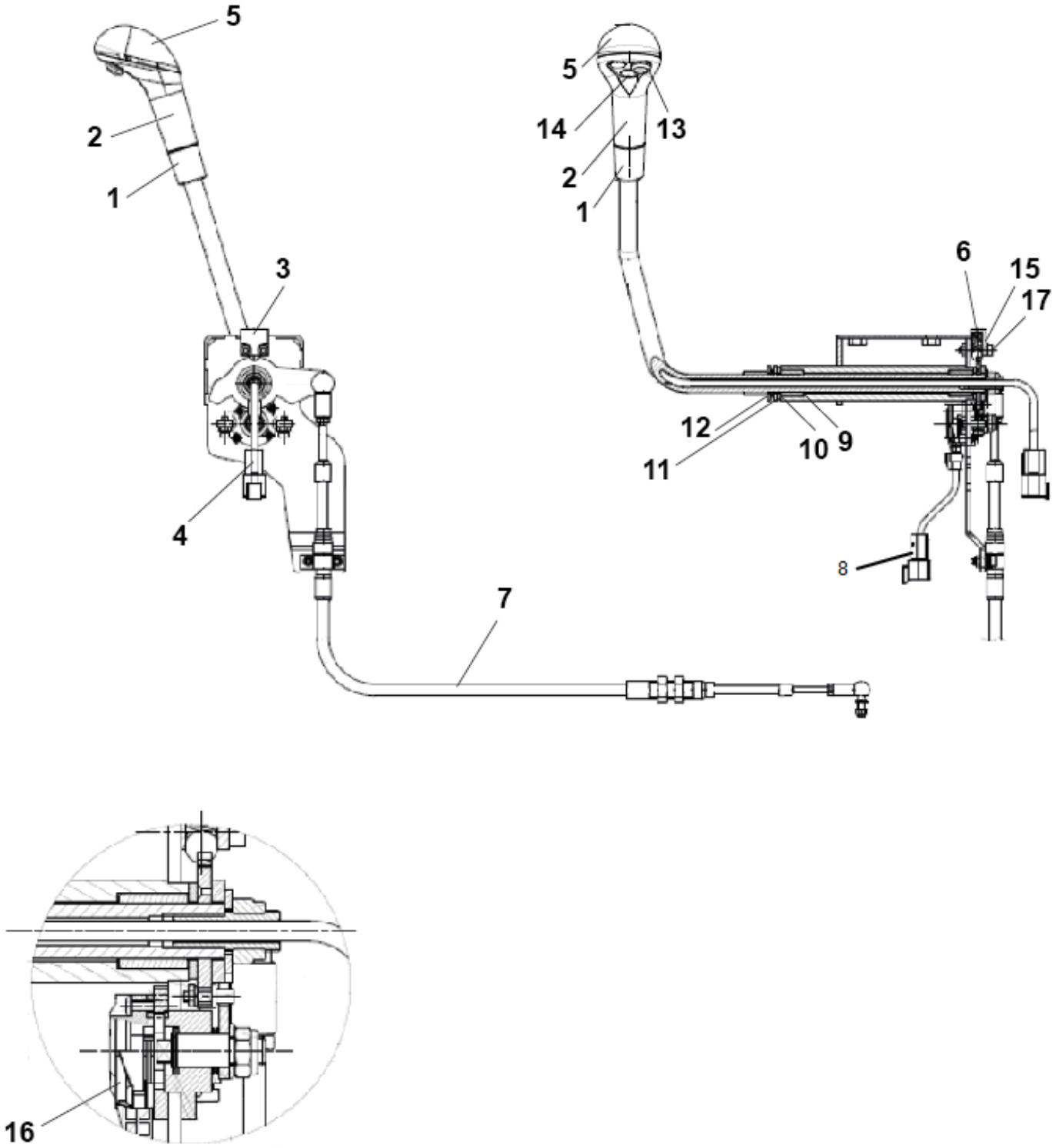

| Item | Part No. | Name | Qty | L | C | SN INFO |
|---|---|---|---|---|---|---|
| 0 | 4812130902 | F/R lever (1 button, single), cpl. | 1 | | | |
| 1 | 4812156562 | Sleeve (knob) | 1 | | | |
| 2 | 4812156559 | Handle | 1 | | | |
| 3 | 4812162478 | Holder | 1 | | | |
| 4 | 4812162467 | Harness (2-poles) | 1 | | | |
| 5 | 4812162477 | Handle top | 1 | | | |
| 6 | - | Spring | 1 | | | |
| 7 | 4812130906 | Cable | 1 | | | |
| 8 | 4812160381 | Sensor harness | 1 | | | |
| 9 | 4812162469 | Bushing | 2 | | | |
| 10 | 4812162470 | Washer, nylon | 2 | | | |
| 11 | 4812162471 | Ring | 2 | | | |
| 12 | - | Back-up washer | 2 | | | |
| 13 | 4812162462 | Push button | 1 | | | |
| 14 | 4812156561 | Protection plug | 2 | | | |
| 15 | 4812156565 | Sphere | 1 | | | |
| 16 | 4812156490 | Potentiometer | 1 | | | |
| 17 | - | Elastic washer | 2 | | | |

**Drivers platform** Control module (2-buttons) - Right side

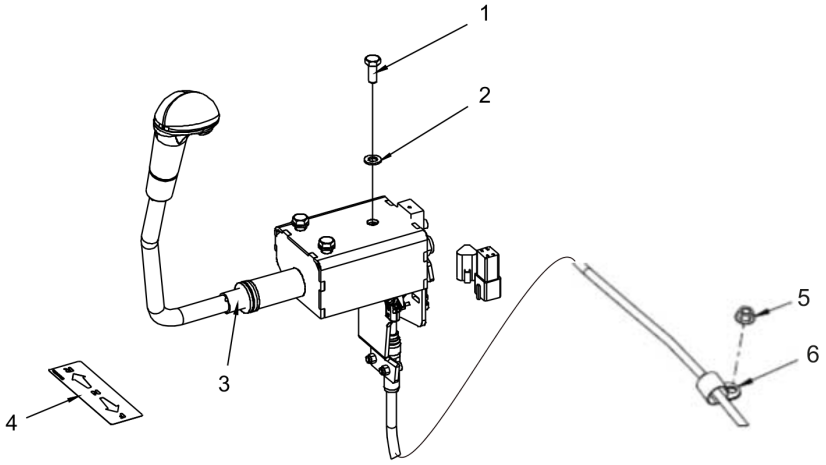

| Item | Part No. | Name | Qty | L | C | SN INFO |
|---|---|---|---|---|---|---|
| 1 | 4700500053 | Screw, M8x20 mm 8.8 A2K | 3 | | | |
| 2 | 4700904229 | Steel plain washer 8.4X16X1.5 | 3 | | | |
| 3 | 4812130903 | F/R lever (2 buttons), cpl. | 1 | | | |
| 4 | 4812130376 | Decal, FNR lever | 1 | | | |
| 5 | 4700792817 | Hexagon nut with flange | 1 | | | |
| 6 | 4700921161 | Pipe clamp | 1 | | | |

**Drivers platform** 4812130903 Control (2-buttons)

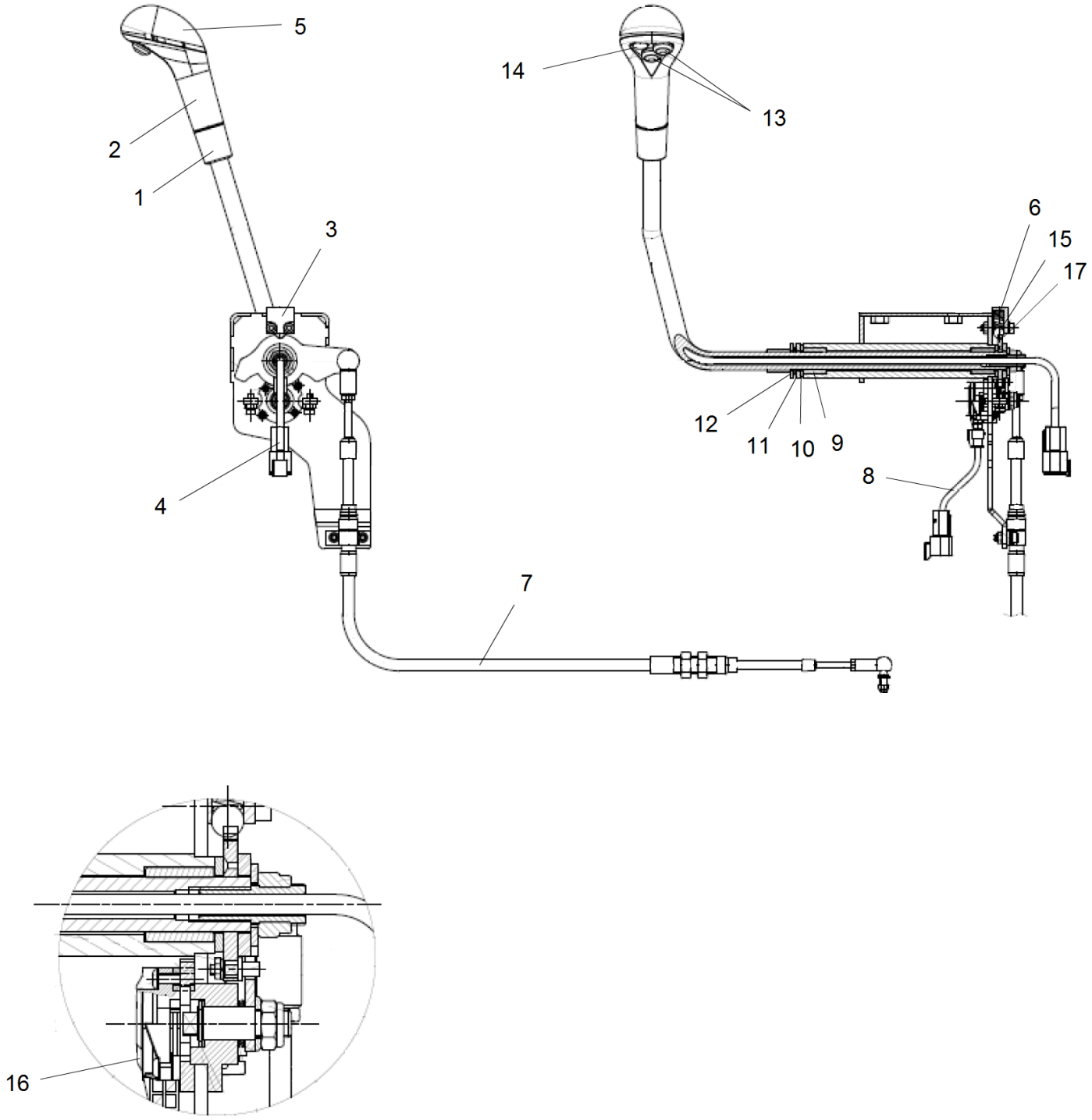


| Item | Part No. | Name | Qty | L | C | SN INFO |
|---|---|---|---|---|---|---|
| 0 | 4812130903 | F/R lever (2 buttons), cpl. | 1 | | | |
| 1 | 4812156562 | Sleeve (knob) | 1 | | | |

| Item | Part No. | Name | Qty | L | C | SN INFO |
|---|---|---|---|---|---|---|
| 2 | 4812156559 | Handle | 1 | | | |
| 3 | 4812162478 | Holder | 1 | | | |
| 4 | 4812162467 | Harness (2-poles) | 1 | | | |
| 5 | 4812162477 | Handle top | 1 | | | |
| 6 | - | Spring | 1 | | | |
| 7 | 4812130906 | Cable | 1 | | | |
| 8 | 4812160381 | Sensor harness | 1 | | | |
| 9 | 4812162469 | Bushing | 2 | | | |
| 10 | 4812162470 | Washer, nylon | 2 | | | |
| 11 | 4812162471 | Ring | 2 | | | |
| 12 | - | Back-up washer | 2 | | | |
| 13 | 4812162462 | Push button | 2 | | | |
| 14 | 4812156561 | Protection plug | 1 | | | |
| 15 | 4812156565 | Sphere | 1 | | | |
| 16 | 4812156490 | Potentiometer | 1 | | | |
| 17 | - | Elastic washer | 2 | | | |

**Drivers platform** Controle module (3-buttons) - Right side

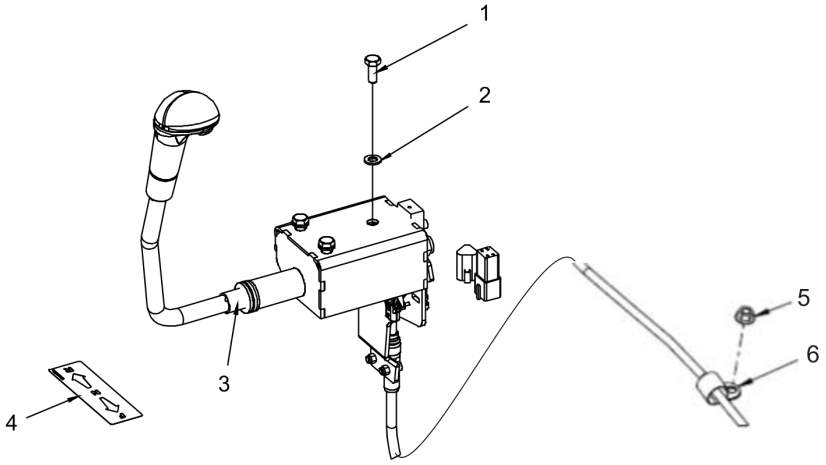

| Item | Part No. | Name | Qty | L | C | SN INFO |
|---|---|---|---|---|---|---|
| 1 | 4700500053 | Screw, M8x20 mm 8.8 A2K | 3 | | | |
| 2 | 4700904229 | Steel plain washer 8.4X16X1.5 | 3 | | | |
| 3 | 4812130904 | F/R lever (3 buttons, single), cpl. | 1 | | | |
| 4 | 4812130376 | Decal, FNR lever | 1 | | | |
| 5 | 4700792817 | Hexagon nut with flange | 1 | | | |
| 6 | 4700921161 | Pipe clamp | 1 | | | |

**Drivers platform** 4812130904 Control (3-buttons)

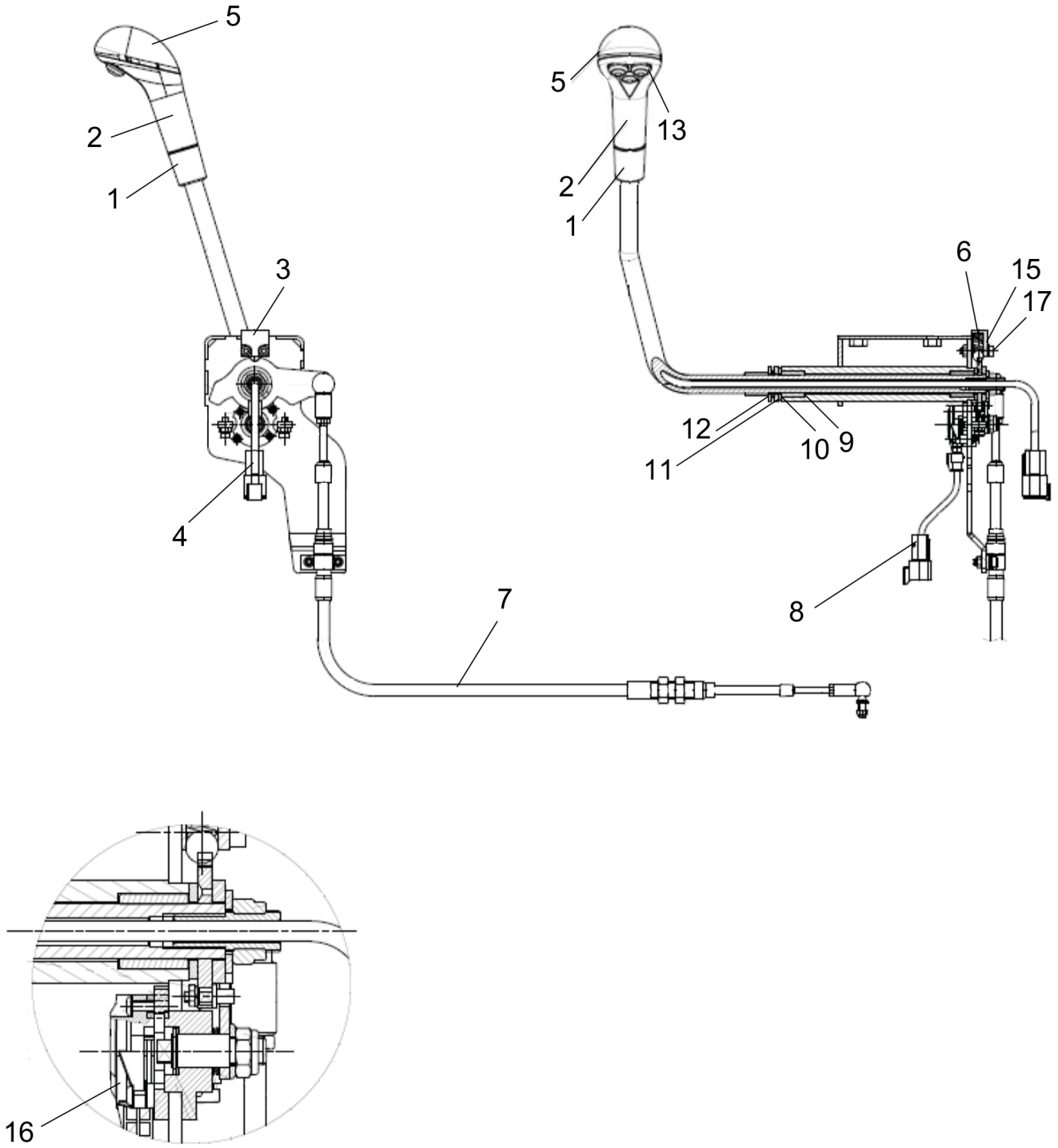

| Item | Part No. | Name | Qty | L | C | SN INFO |
|---|---|---|---|---|---|---|
| 0 | 4812130904 | F/R lever (3 buttons, single), cpl. | 1 | | | |
| 1 | 4812156562 | Sleeve (knob) | 1 | | | |
| 2 | 4812156559 | Handle | 1 | | | |
| 3 | 4812162478 | Holder | 1 | | | |
| 4 | 4812162467 | Harness (2-poles) | 1 | | | |
| 5 | 4812162477 | Handle top | 1 | | | |
| 6 | - | Spring | 1 | | | |
| 7 | 4812130906 | Cable | 1 | | | |
| 8 | 4812160381 | Sensor harness | 1 | | | |
| 9 | 4812162469 | Bushing | 2 | | | |
| 10 | 4812162470 | Washer, nylon | 2 | | | |
| 11 | 4812162471 | Ring | 2 | | | |
| 12 | - | Back-up washer | 2 | | | |
| 13 | 4812162462 | Push button | 3 | | | |
| 15 | 4812156565 | Sphere | 1 | | | |
| 16 | 4812156490 | Potentiometer | 1 | | | |
| 17 | - | Elastic washer | 2 | | | |

**Drivers platform** ECU module

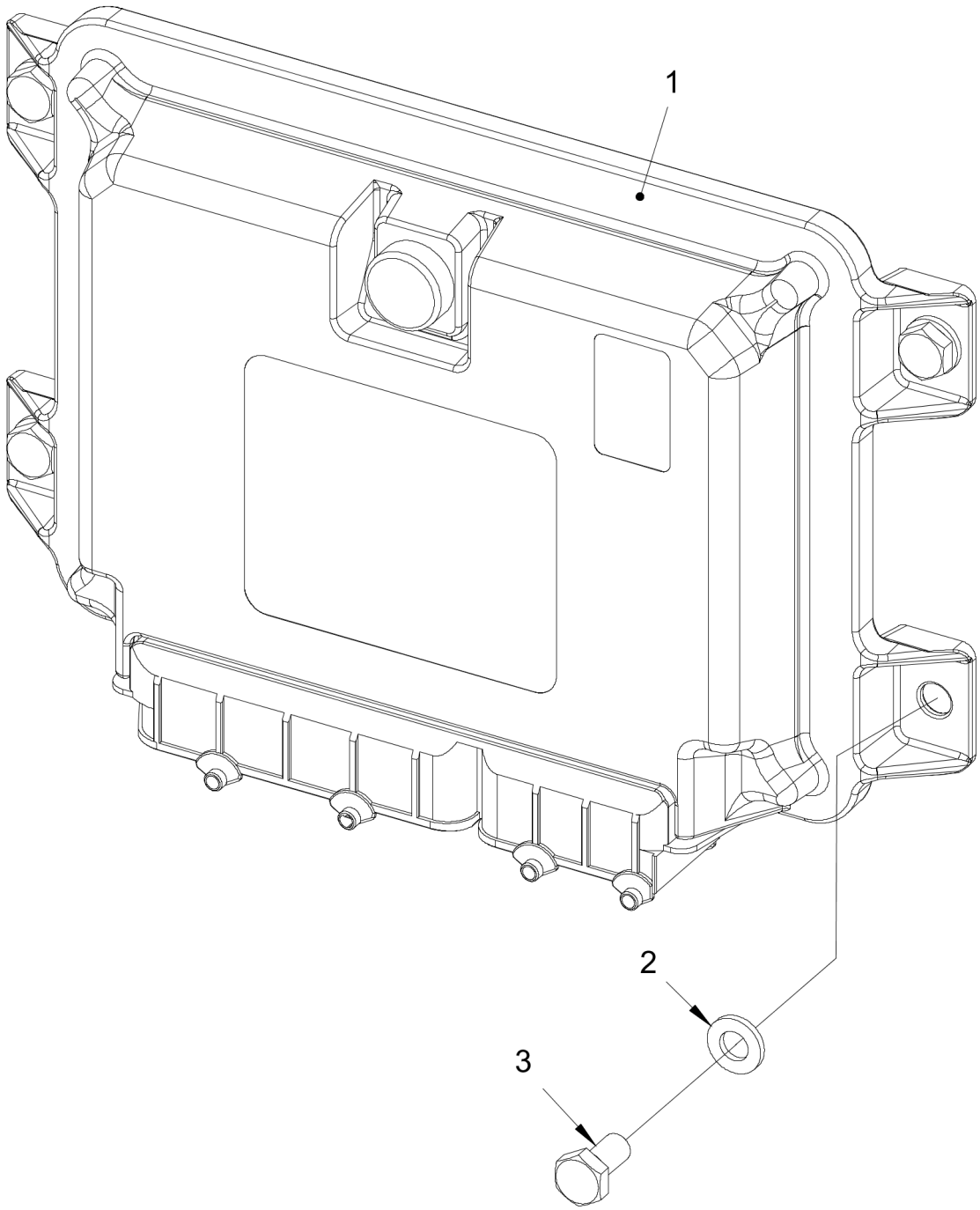

| Item | Part No. | Name | Qty | L | C | SN INFO |
|---|---|---|---|---|---|---|
| 1 | 4812125677 | Control unit | 1 | | | |
| 2 | 4700904228 | Steel plain washer | 4 | | | |
| 3 | 4700500012 | Hexagon head screw M | 4 | | | |

**Drivers platform** Cup and can holder

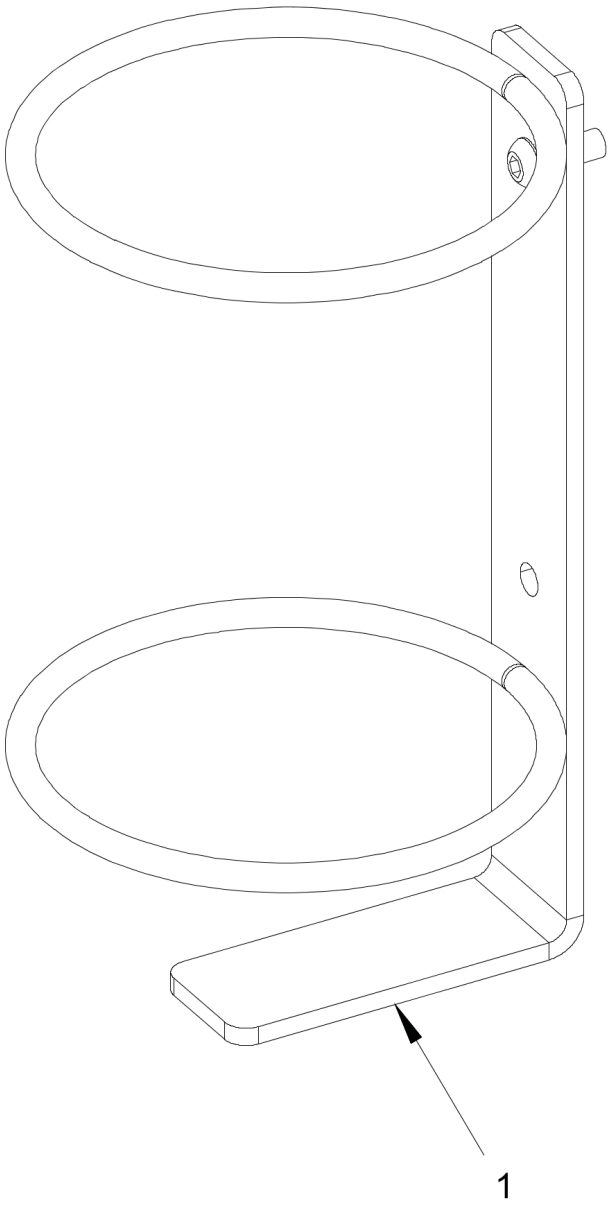

| Item | Part No. | Name | Qty | L | C | SN INFO |
|---|---|---|---|---|---|---|
| 1 | 4812127395 | Bracket | 1 | | | |

## **Decals** Decals

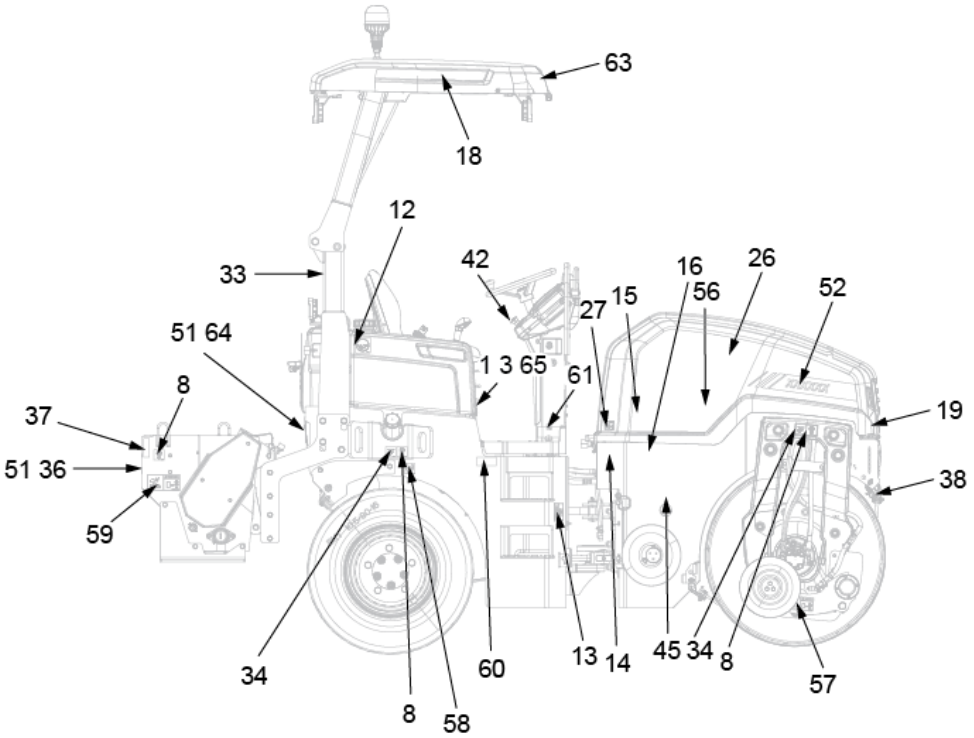


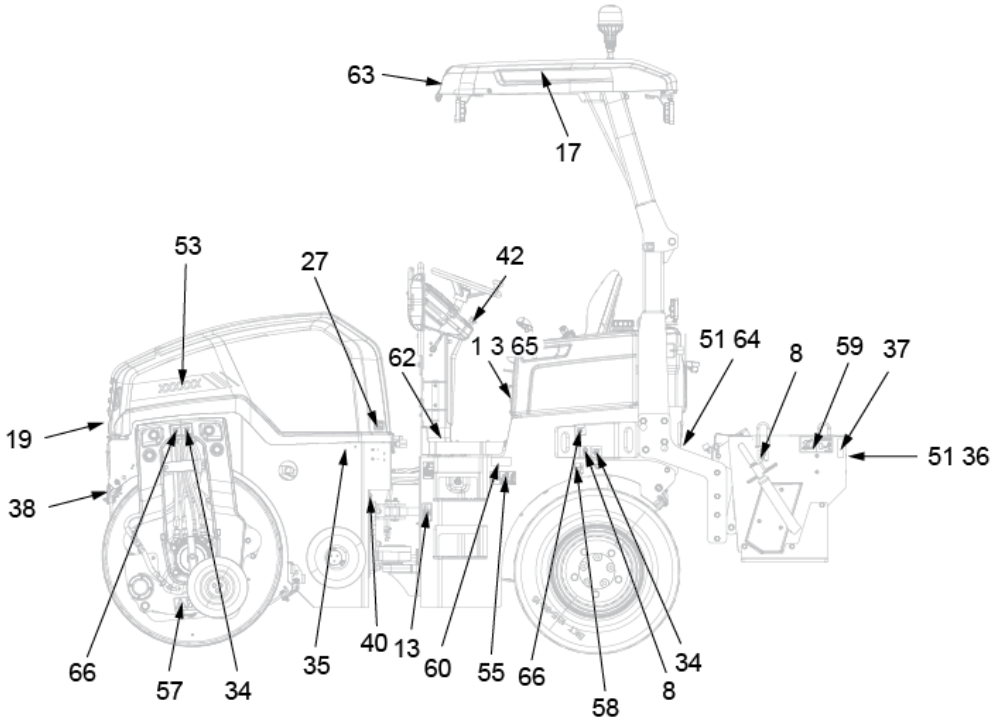

| Item | Part No. | Name | Qty | L | C | SN INFO |
|---|---|---|---|---|---|---|
| 1 | 4700903459 | Decal "SAFETY" | 1 | | | |
| 3 | 4700903425 | Decal "SAFETY MANUAL" | 1 | | | |
| 8 | 4700357587 | Label lifting point | 4 | | | |
| 12 | 4700991657 | Decal "WATER" | 1 | | | |
| 13 | 4700903422 | Safety decal "HAZARDOUS AREA" | 2 | | | |
| 14 | 4700991658 | Decal fuel, Diesel | 1 | | | |
| 14-2 | 4811000345 | Decal "ULTRA LOW SULFUR FUEL ONLY" | 1 | | | |
| 15 | 4811000344 | Decal, low sulfur | 1 | | | |
| 16 | 4700792772 | Decal "BIO HYDRAULIC OIL" PANOLIN | 1 | | | |
| 17 | 4812128236 | Decal, cosmetic | 1 | | | |
| 18 | 4812128221 | Decal, cosmetic | 1 | | | |
| 19 | 4812127713 | Decal FAYAT DYNAPAC 280 WH | 2 | | | |
| 26 | 4700903423 | Safety decal, Rotating engine components | 1 | | | |
| 27 | 4700903424 | Decal hot surface | 2 | | | |
| 28 | 4700272372 | Decal, hydraulic oil | 1 | | | |
| 33 | 4700908229 | Safety decal | 2 | | | |
| 34 | 4700382751 | Decal "SECURING POINT/TIE DOWN" | 4 | | | |
| 35 | 4700904835 | Decal Battery power-disconnect | 1 | | | |
| 36 | 4700377742 | Reflector, red | 2 | | | |
| 37 | 4700377744 | Reflector, yellow | 2 | | | |
| 38 | 4700377743 | Reflector white | 2 | | | |
| 40 | 4700791274 | Decal "Sound power level" 104 dB | 1 | | | |
| 42 | 4811000128 | Plate | 1 | | | |
| 45 | 4700272373 | Decal, hydraulic oil level | 1 | | | |
| 51 | 4812127714 | Decal FAYAT DYNAPAC 350 WH | 2 | | | |
| 52 | 4812132514 | Decal model code combined, left CC1300C VI (right side) | 1 | | | |
| 52-1 | 4812127728 | Decal "GRAPHIC ELEMENT" Left version | 1 | | | |
| 52-2 | | Decal "MODEL CODE" CC1300 | 1 | | | |
| 53 | 4812132513 | Decal model code combined, right CC1300C VI (left side) | 1 | | | |
| 53-1 | 4812127729 | Decal "GRAPHIC ELEMENT" Right version | 1 | | | |
| 53-2 | | Decal "MODEL CODE" CC1300 | 1 | | | |
| 55 | 4812125363 | Safety decal "RISK OF CRUSHING" | 1 | | | |
| 56 | 4812163551 | Service kit decal (V2203) | 1 | | | |
| 56 | 4812163552 | Service kit decal (V2403) | 1 | | | |

| Item | Part No. | Name | Qty | L | C | SN INFO |
|---|---|---|---|---|---|---|
| 57 | 4700904083 | Safety decal | 2 | | | |
| 58 | 4812116992 | Decal "TYRE PRESSURE" 170-250 kPa | 2 | | | |
| 59 | 4811000080 | Safety decal | 2 | | | |
| 60 | 4812130233 | Reflector, yellow | 2 | | | |
| 61 | 4700791342 | Decal "SPRINKLER" Wheels | 1 | | | |
| 62 | 4700355981 | Decal | 1 | | | |
| 63 | 4812128167 | Decal, cosmetic | 1 | | | |
| 64 | 4812130232 | Reflector, red | 2 | | | |
| 65 | 4700902509 | Decal | 1 | | | |
| 66 | 4700792749 | Plate"TIE DOWN POINT" | 2 | | | |

**Decals** Reflector module, Working lights

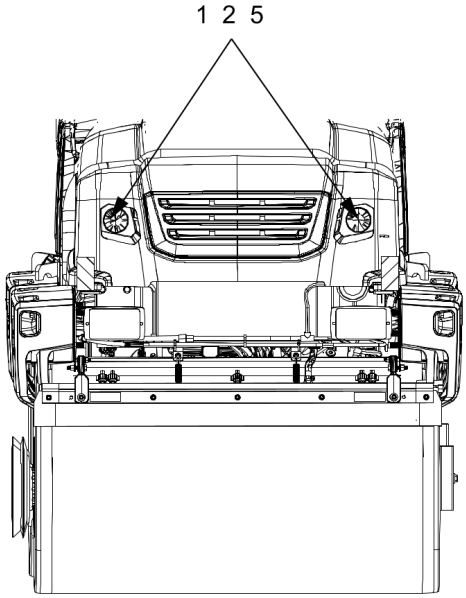


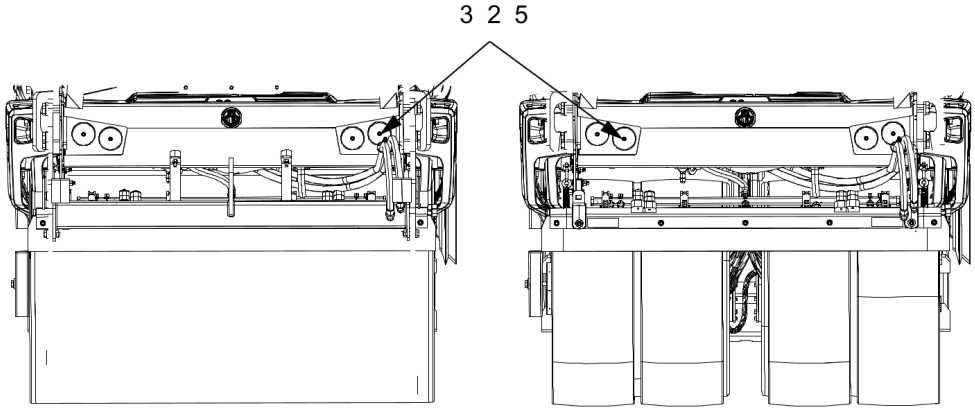


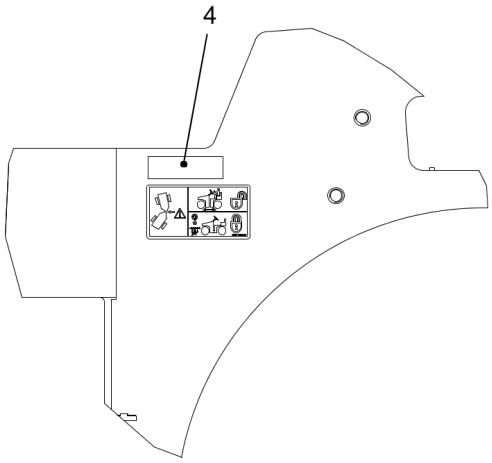

| Item | Part No. | Name | Qty | L | C | SN INFO |
|---|---|---|---|---|---|---|
| 1 | 4700791957 | Reflector, white | 2 | | | |
| 2 | 4700791666 | Blind rivet | 6 | | | |
| 3 | 4700791956 | Reflector, red | 4 | | | |
| 4 | 4700377744 | Reflector, yellow | 2 | | | |
| 5 | 4700904228 | Steel plain washer | 6 | | | |

**Decals** Reflector module, Driving lights

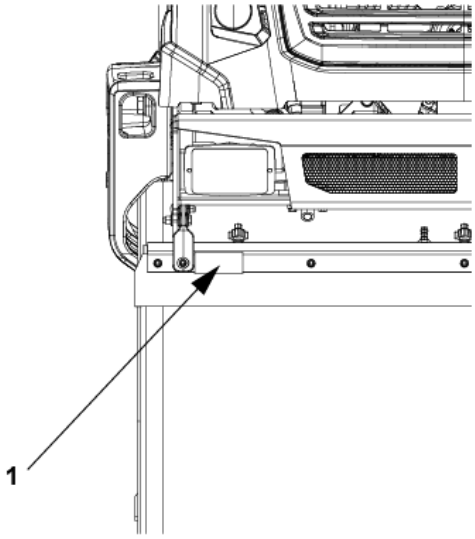


**Front view**

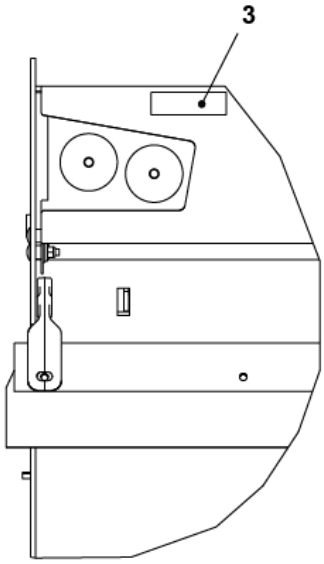


**Rear view**

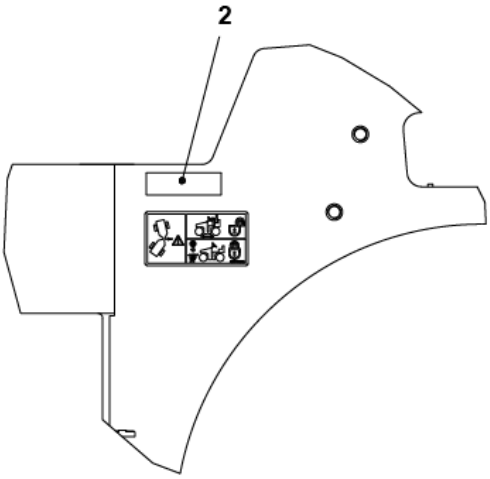


**Left view**

| Item | Part No. | Name | Qty | L | C | SN INFO |
|---|---|---|---|---|---|---|
| 1 | 4812130231 | Reflector, White | 2 | | | |
| 2 | 4812130233 | Reflector, yellow | 2 | | | |
| 3 | 4812130232 | Reflector, red | 2 | | | |

**Edge cutter** Edge cutter, Left side

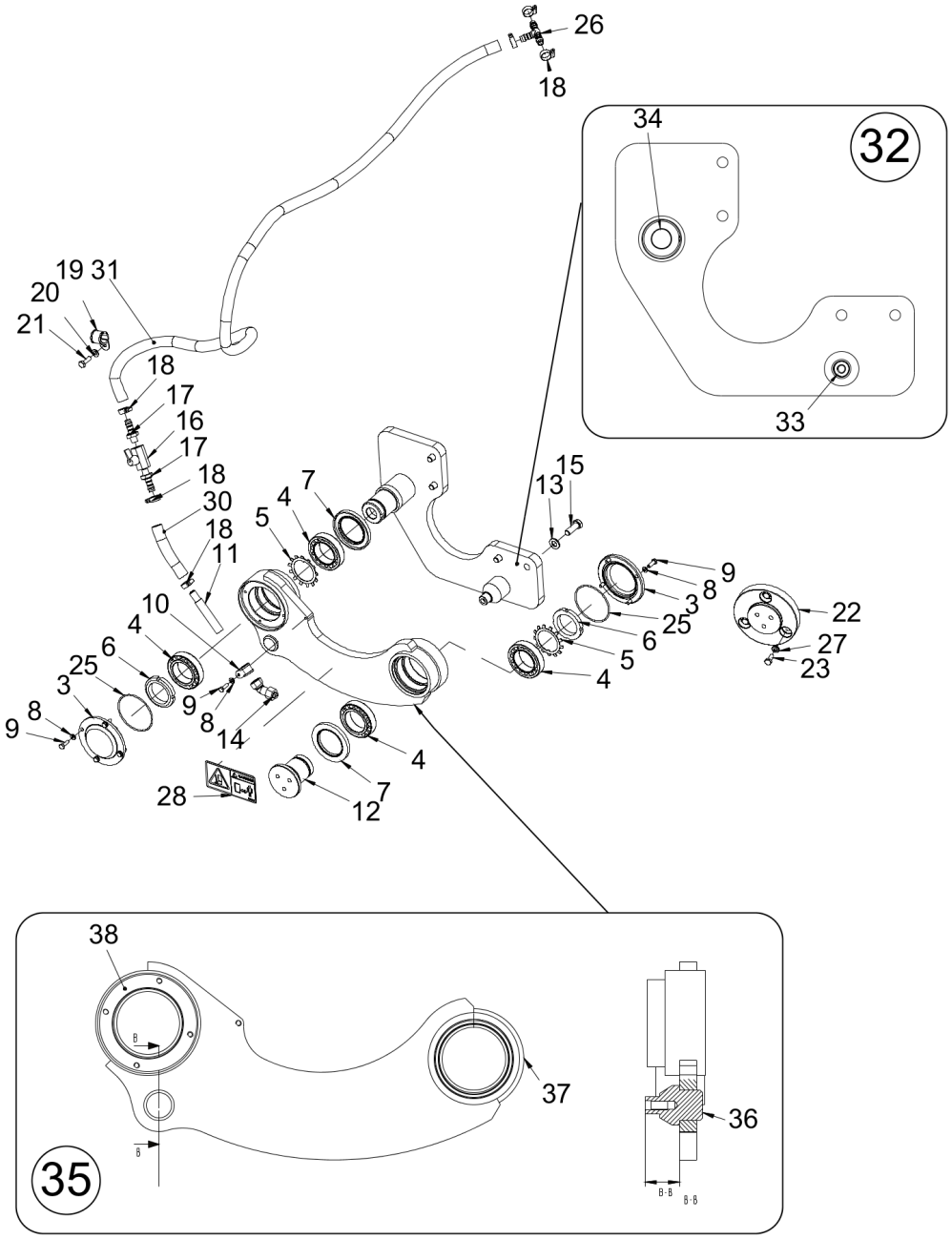

| Item | Part No. | Name | Qty | L | C | SN INFO |
|---|---|---|---|---|---|---|
| 3 | 4812125890 | Bearing cover | 2 | | | |
| 4 | 4812125913 | Taper roller bearing | 4 | | | |
| 5 | 4700136009 | Lock washer | 2 | | | |
| 6 | 4700135009 | Shaft nut | 2 | | | |
| 7 | 4812125891 | RADIAL LIP-TYPE SEAL | 2 | | | |
| 8 | 4700904228 | Steel plain washer | 9 | | | |
| 9 | 4700500040 | Hex bolt M06X020H 8.8 A2K | 9 | | | |
| 10 | 4700921031 | Clamp | 1 | | | |
| 11 | 4700392058 | Pipe | 1 | | | |
| 12 | 4812125894 | SHAFT | 1 | | | |
| 13 | 4700904231 | Steel plain washer | 4 | | | |
| 14 | 4700392123 | Nozzle body | 1 | | | |
| 15 | 4700947689 | Hexagon Head Screw, M12x40H, 10.9, Geomet | 4 | | | |
| 16 | 4700925599 | Ball valve | 1 | | | |
| 17 | 4700901432 | Hose connection | 2 | | | |
| 18 | 4700313002 | Hose clamp | 6 | | | |
| 19 | 4700960727 | Clamp | 1 | | | |
| 20 | 4700904229 | Steel plain washer 8.4X16X1.5 | 1 | | | |
| 21 | 4700500021 | Hexagon head screw M | 1 | | | |
| 22 | 4812125910 | HOLDER | 1 | | | |
| 23 | 4700500053 | Screw, M8x20 mm 8.8 A2K | 3 | | | |
| 25 | 4700160276 | O-ring | 2 | | | |
| 26 | 4700923735 | Hose connection | 1 | | | |
| 27 | 4700904556 | Steel plain washer | 3 | | | |
| 28 | 4700904083 | Safety decal | 1 | | | |
| 30 | 4812112074 | Plastic hose (x m) | 0,18 M | | | |
| 31 | 4812112074 | Plastic hose (x m) | 1,90 M | | | |
| 32 | 4812130910 | Holder | 1 | | | |
| 33 | 4812125869 | Shaft | 1 | | | |
| 34 | 4812125870 | Shaft | 1 | | | |
| 35 | 4812130911 | Lever | 1 | | | |
| 36 | 4812125877 | Shaft | 1 | | | |
| 37 | 4812125888 | Bearing housing | 1 | | | |
| 38 | 4812125889 | Bearing housing | 1 | | | |

**Edge cutter** Edge cutter, Right side

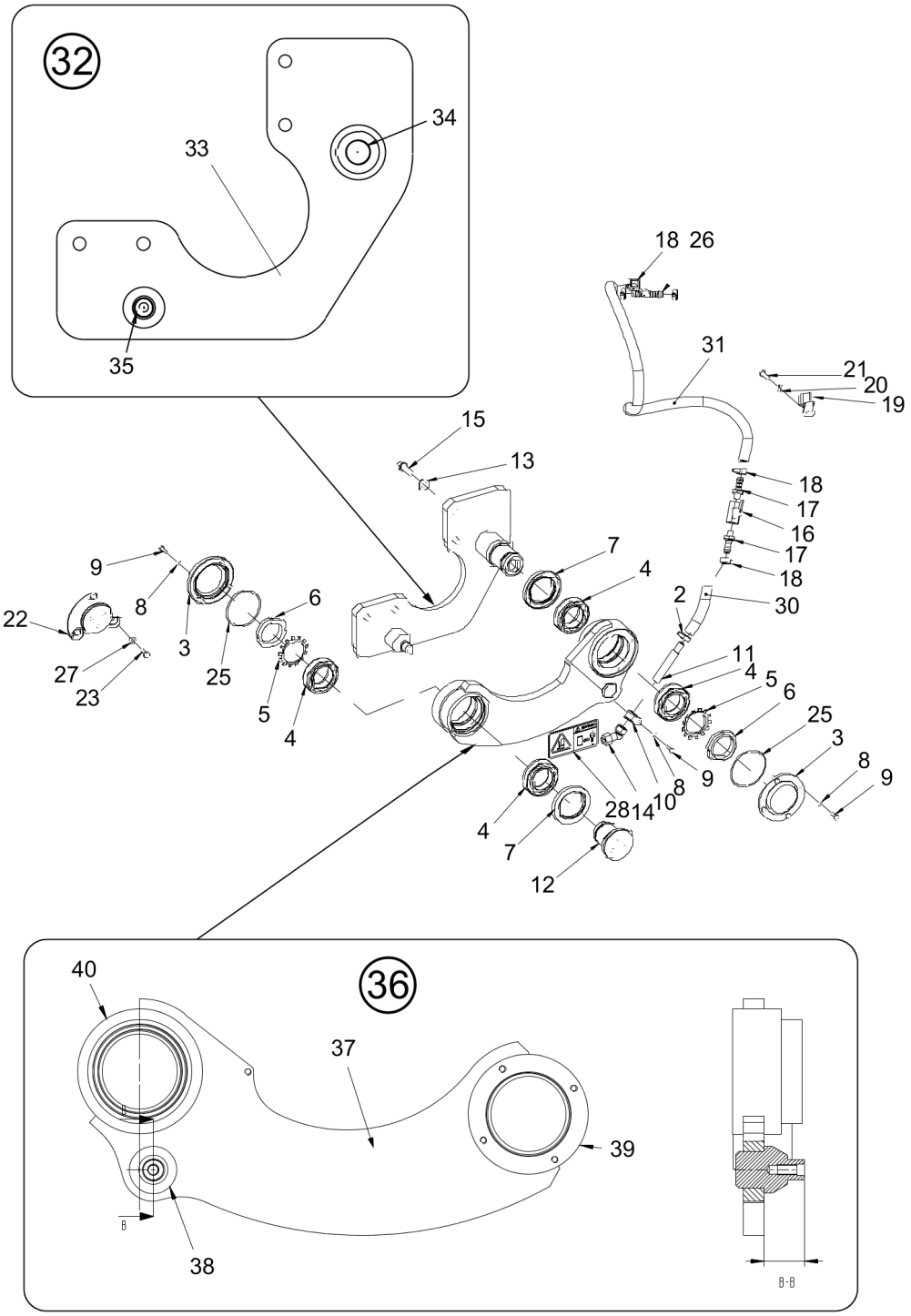

| Item | Part No. | Name | Qty | L | C | SN INFO |
|---|---|---|---|---|---|---|
| 2 | 4812127992 | CUTTER | 1 | | | |
| 3 | 4812125890 | Bearing cover | 2 | | | |
| 4 | 4812125913 | Taper roller bearing | 4 | | | |
| 5 | 4700136009 | Lock washer | 2 | | | |
| 6 | 4700135009 | Shaft nut | 2 | | | |
| 7 | 4812125891 | RADIAL LIP-TYPE SEAL | 2 | | | |
| 8 | 4700904228 | Steel plain washer | 9 | | | |
| 9 | 4700500040 | Hex bolt M06X020H 8.8 A2K | 9 | | | |
| 10 | 4700921031 | Clamp | 1 | | | |
| 11 | 4700392058 | Pipe | 1 | | | |
| 12 | 4812125894 | SHAFT | 1 | | | |
| 13 | 4700904231 | Steel plain washer | 4 | | | |
| 14 | 4700392123 | Nozzle body | 1 | | | |
| 15 | 4700947689 | Hexagon Head Screw, M12x40H, 10.9, Geomet | 4 | | | |
| 16 | 4700925599 | Ball valve | 1 | | | |
| 17 | 4700901432 | Hose connection | 2 | | | |
| 18 | 4700313002 | Hose clamp | 6 | | | |
| 19 | 4700960727 | Clamp | 1 | | | |
| 20 | 4700904229 | Steel plain washer 8.4X16X1.5 | 1 | | | |
| 21 | 4700500021 | Hexagon head screw M | 1 | | | |
| 22 | 4812125910 | HOLDER | 1 | | | |
| 23 | 4700500053 | Screw, M8x20 mm 8.8 A2K | 3 | | | |
| 25 | 4700160276 | O-ring | 2 | | | |
| 26 | 4700923735 | Hose connection | 1 | | | |
| 27 | 4700904556 | Steel plain washer | 3 | | | |
| 28 | 4700904083 | Safety decal | 1 | | | |
| 30 | 4812112074 | Plastic hose (x m) | 0,18 | | | |
| 31 | 4812112074 | Plastic hose (x m) | 1,02 | | | |
| 32 | 4812130887 | Holder | 1 | | | |
| 33 | 4812132298 | Plate | 1 | | | |
| 34 | 4812125869 | Shaft | 1 | | | |
| 35 | 4812125870 | Shaft | 1 | | | |
| 36 | 4812130911 | Lever | 1 | | | |
| 37 | 4812127991 | Plate | 1 | | | |
| 38 | 4812125877 | Shaft | 1 | | | |

| Item | Part No. | Name | Qty | L | C | SN INFO |
|---|---|---|---|---|---|---|
| 39 | 4812125888 | Bearing housing | 1 | | | |
| 40 | 4812125889 | Bearing housing | 1 | | | |

**Edge cutter** Cutting disc

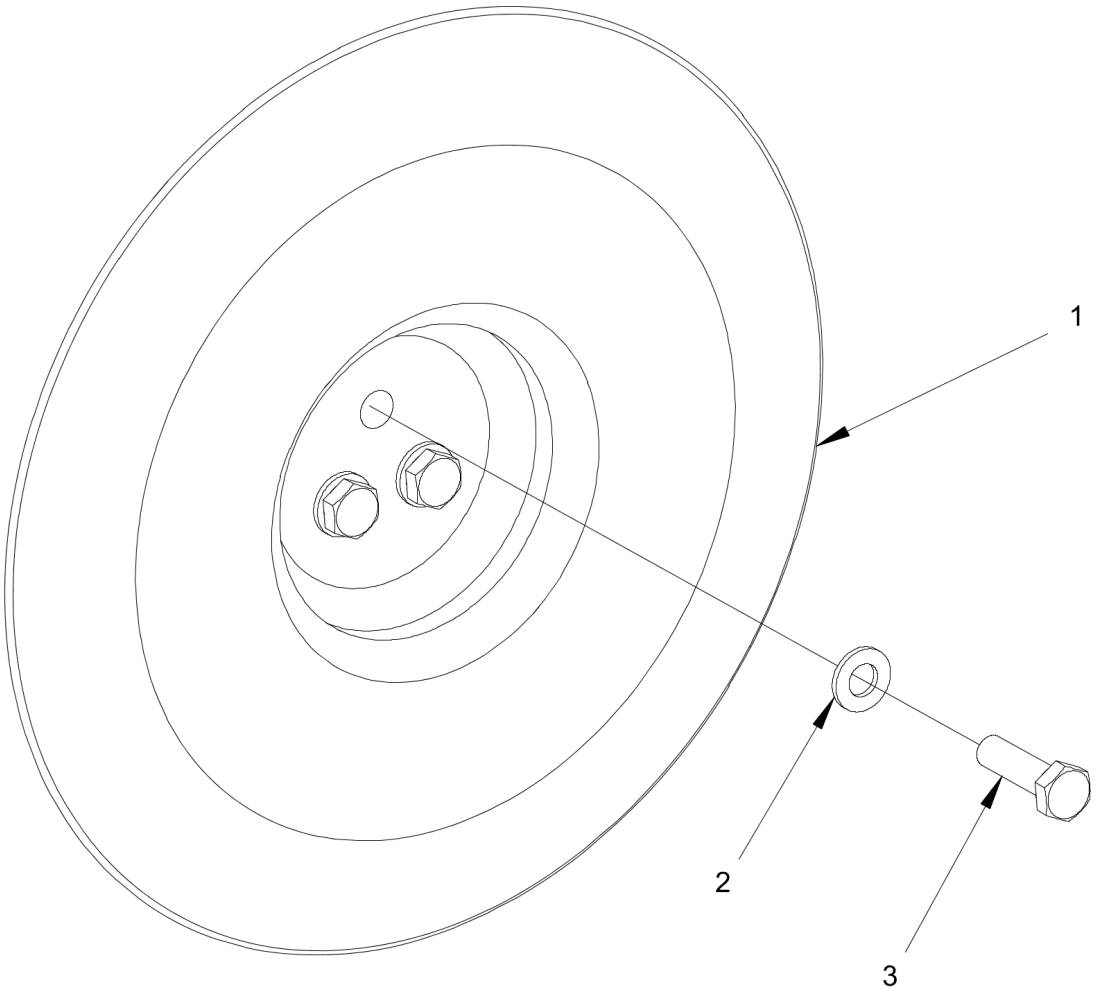

| Item | Part No. | Name | Qty | L | C | SN INFO |
|---|---|---|---|---|---|---|
| 1 | 4812125936 | Cutting disc | 1 | | | |
| 2 | 4812122654 | Steel plain washer | 3 | | | |
| 3 | 4700500030 | Hexagon screw M | 3 | | | |

**Edge cutter** Pressing roller

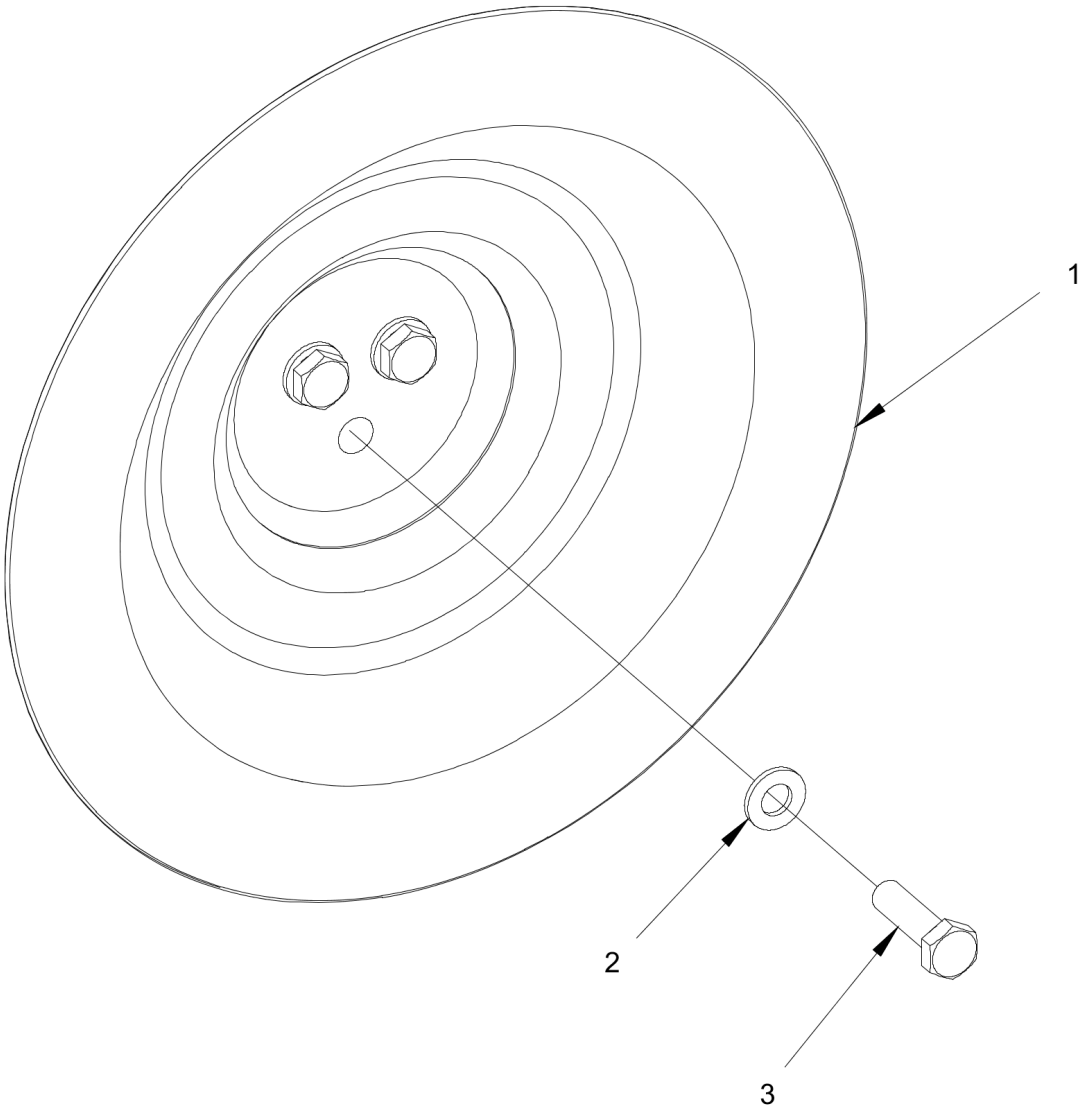

| Item | Part No. | Name | Qty | L | C | SN INFO |
|---|---|---|---|---|---|---|
| 1 | 4812125892 | Pressing roller | 1 | | | |
| 2 | 4812122654 | Steel plain washer | 3 | | | |
| 3 | 4700500030 | Hexagon screw M | 3 | | | |

**Optional equipment** Chip spreader module

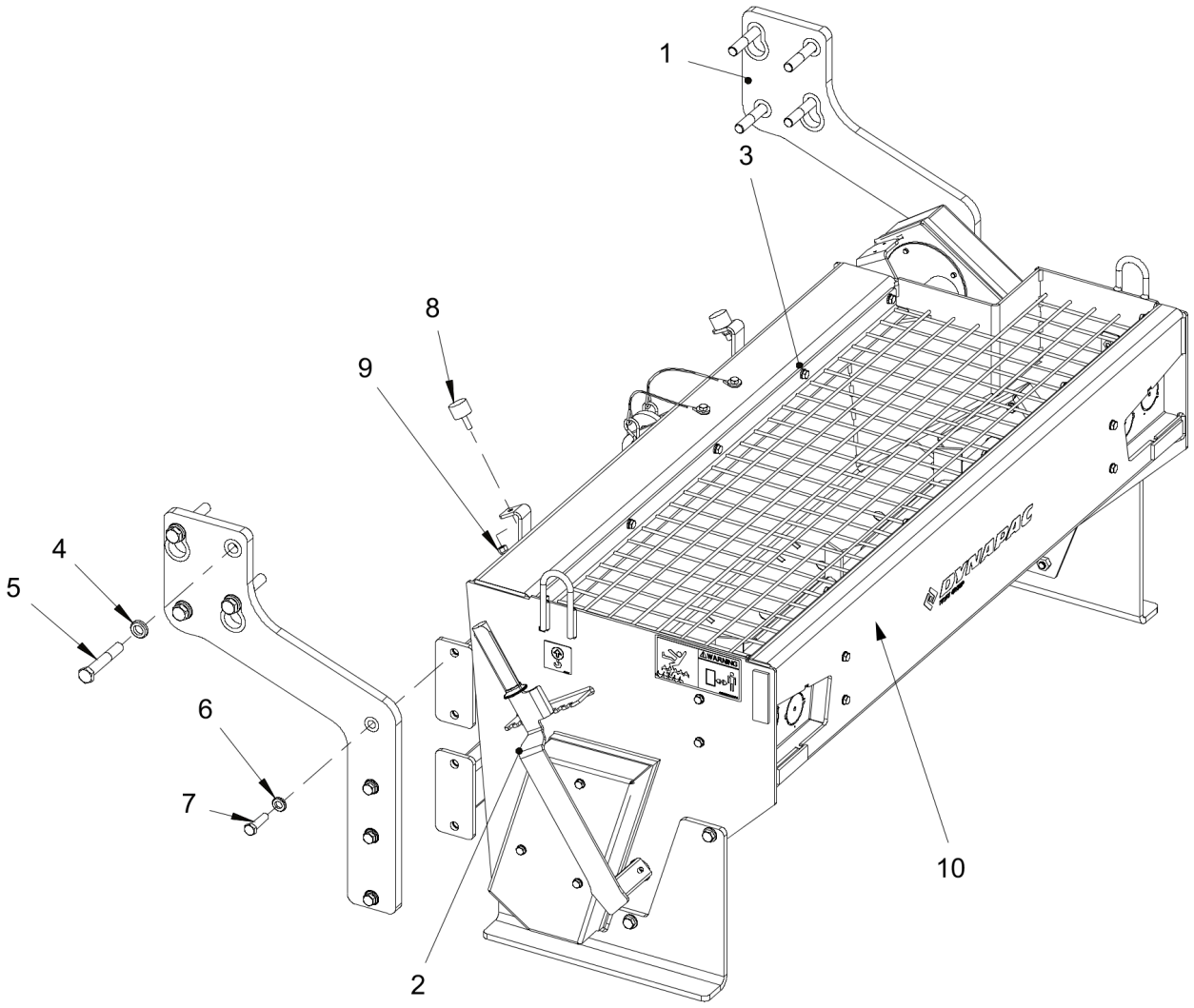

| Item | Part No. | Name | Qty | L | C | SN INFO |
|---|---|---|---|---|---|---|
| 1 | 4812130165 | Fork | 2 | | | |
| 2 | 4812130163 | Bracket | 1 | | | |
| 3 | 4812130164 | Bracket | 1 | | | |
| 4 | 4700904558 | Steel plain washer 17x30x6 mm 300 HV | 8 | | | |
| 5 | 4700500285 | Hexagon head screw | 8 | | | |
| 6 | 4700904703 | Plain washer 13x24x4 mm | 8 | | | |
| 7 | 4700903906 | Hexagon head screw | 8 | | | |
| 8 | 4700280101 | Shock absorber | 2 | | | |
| 9 | 4700586003 | Lock nut M8 | 2 | | | |
| 10 | - | Chip spreader | 1 | | | |

**Optional equipment** Chip spreader

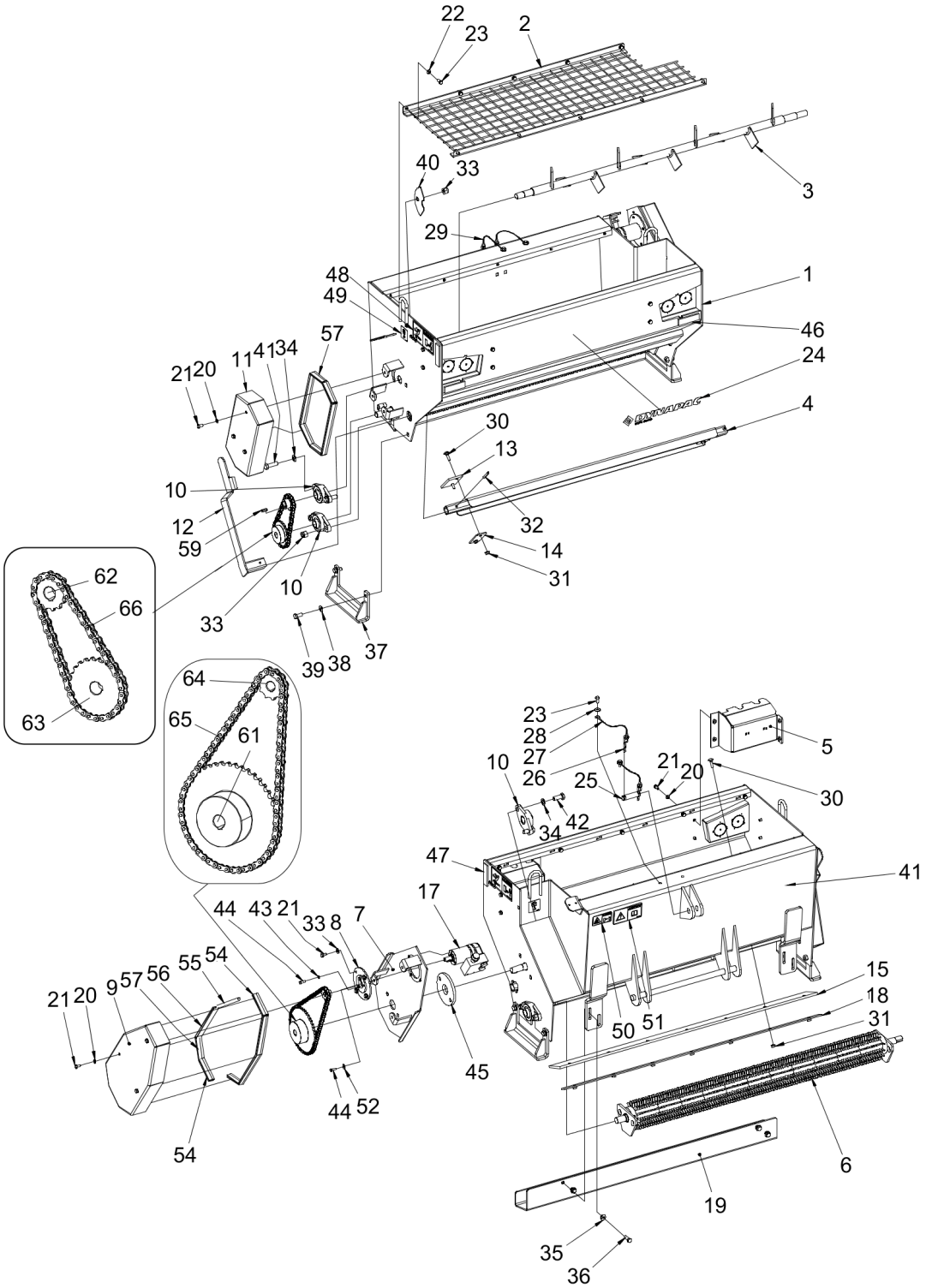

| Item | Part No. | Name | Qty | L | C | SN INFO |
|---|---|---|---|---|---|---|
| 2 | 4812129684 | Grid | 1 | | | |
| 3 | 4812129686 | Shaft | 1 | | | |
| 4 | 4812129722 | Hatch | 1 | | | |
| 5 | 4812130013 | Bracket | 2 | | | |
| 7 | 4812129729 | Bracket | 1 | | | |
| 8 | 4812123044 | Bracket | 1 | | | |
| 9 | 4812129746 | Cover | 1 | | | |
| 11 | 4812129749 | Cover | 1 | | | |
| 12 | 4812129789 | Lever | 1 | | | |
| 13 | 4812129750 | Rubber | 2 | | | |
| 14 | 4812129751 | Bracket | 2 | | | |
| 15 | 4812129752 | Scraper blade | 1 | | | |
| 18 | 4812129753 | Bracket | 1 | | | |
| 19 | 4812129788 | Bracket | 1 | | | |
| 20 | 4700904229 | Steel plain washer 8.4X16X1.5 | 14 | | | |
| 21 | 4700500019 | Hexagon head screw M | 18 | | | |
| 22 | 4700904556 | Steel plain washer | 10 | | | |
| 23 | 4700500053 | Screw, M8x20 mm 8.8 A2K | 12 | | | |
| 24 | 4812127714 | Decal FAYAT DYNAPAC 350 WH | 1 | | | |
| 25 | 4812126339 | Pin | 1 | | | |
| 26 | 4700635061 | Locking clip | 2 | | | |
| 27 | 4700343775 | Plastic insulation steel wire | 1 | | | |
| 28 | 4700904640 | Steel plain washer | 2 | | | |
| 29 | 4700343775 | Plastic insulation steel wire | 1 | | | |
| 30 | 4700791614 | Cup square neck bolt M08x030H 8.8 | 11 | | | |
| 31 | 4700570102 | Nut M8 | 11 | | | |
| 32 | 4700926467 | Pin | 2 | | | |
| 33 | 4812124012 | Lock nut M | 6 | | | |
| 34 | 4700792716 | Steel plain washer M14 | 5 | | | |
| 35 | 4700904557 | Steel plain washer | 4 | | | |
| 36 | 4700500029 | Hexagon head screw M | 4 | | | |
| 37 | 4812129937 | Bracket | 2 | | | |
| 38 | 4700904231 | Steel plain washer | 4 | | | |
| 39 | 4700500051 | Hexagon screw M | 4 | | | |
| 40 | 4812130125 | Cover | 1 | | | |

| Item | Part No. | Name | Qty | L | C | SN INFO |
|---|---|---|---|---|---|---|
| 41 | 4700500065 | Screw | 2 | | | |
| 42 | 4700500039 | Screw | 2 | | | |
| 43 | 4700904228 | Steel plain washer | 3 | | | |
| 44 | 4700500040 | Hex bolt M06X020H 8.8 A2K | 4 | | | |
| 45 | 4812130065 | Plate | 1 | | | |
| 46 | 4700377742 | Reflector, red | 2 | | | |
| 47 | 4700377744 | Reflector, yellow | 2 | | | |
| 48 | 4811000080 | Safety decal | 2 | | | |
| 49 | 4700357587 | Label lifting point | 2 | | | |
| 50 | 4700903423 | Safety decal, Rotating engine components | 1 | | | |
| 51 | 4700903459 | Decal "SAFETY" | 1 | | | |
| 52 | 4700928381 | Washer, 6.4x18x1.6 mm | 1 | | | |
| 53 | 4700791304 | Steel plain washer | 4 | | | |
| 54 | 4700902166 | Rubber edge trim | 0,16 M | | | |
| 55 | 4700902166 | Rubber edge trim | 0,16 M | | | |
| 56 | 4700902166 | Rubber edge trim | 0,16 M | | | |
| 57 | 4700902166 | Rubber edge trim | 0,16 M | | | |
| 58 | 4700902166 | Rubber edge trim | 0,16 M | | | |
| 59 | 4700350029 | Feather key | 3 | | | |
| 60 | 4812129910 | Chain sprocket | 1 | | | |
| 61 | 4812129914 | Chain sprocket | 1 | | | |
| 62 | 4812129912 | Chain sprocket | 1 | | | |
| 63 | 4812129913 | Chain sprocket | 1 | | | |
| 64 | 4812129911 | Chain sprocket | 1 | | | |
| 65 | 4812129931 | Chain | 0,91 M | | | |
| 66 | 4812129931 | Chain | 0,63 M | | | |

**Optional equipment** Temperature sensor (option)

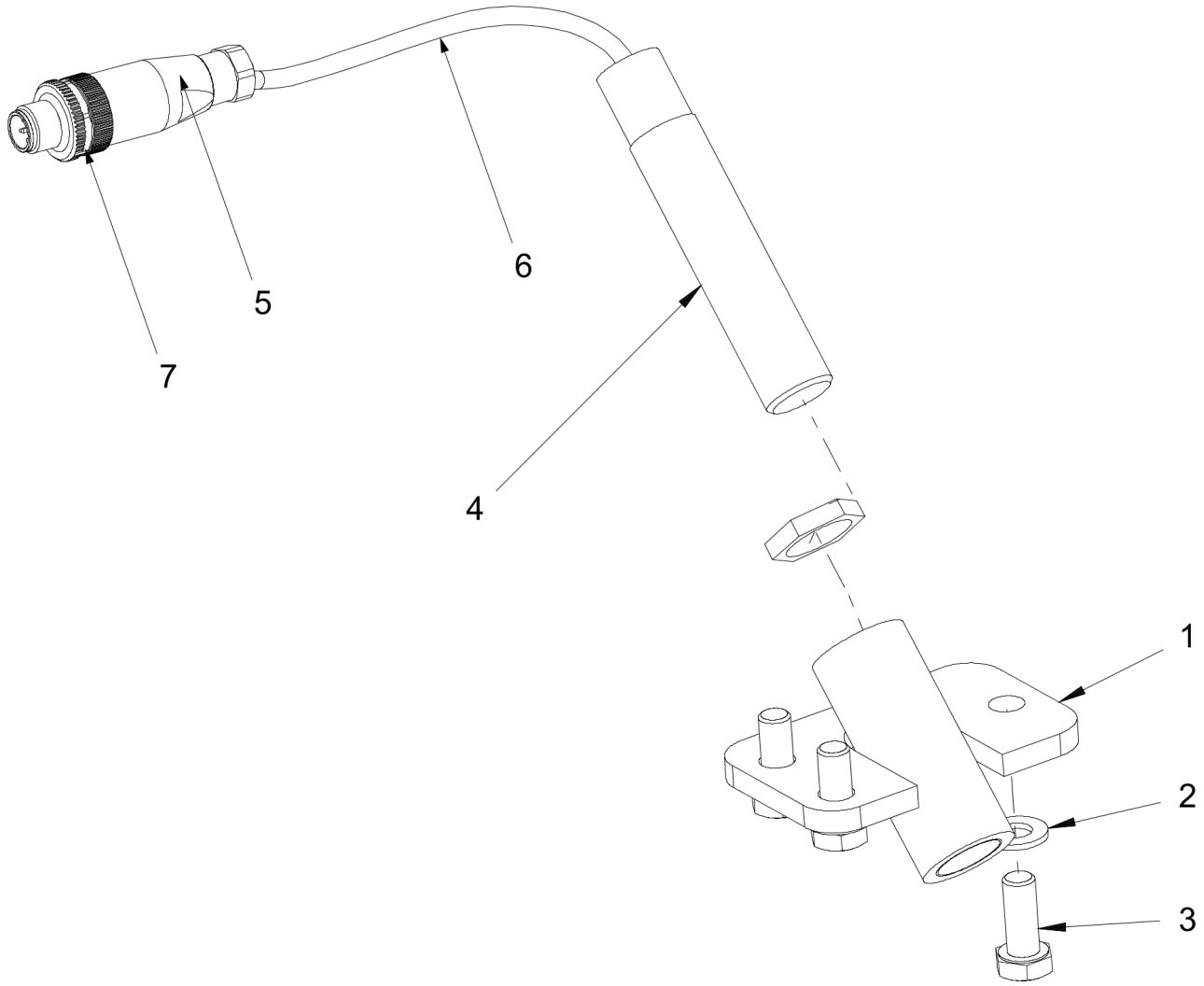

| Item | Part No. | Name | Qty | L | C | SN INFO |
|---|---|---|---|---|---|---|
| 1 | 4812130598 | Holder | 1 | | | |
| 2 | 4700904229 | Steel plain washer 8.4X16X1.5 | 3 | | | |
| 3 | 4700500053 | Screw, M8x20 mm 8.8 A2K | 3 | | | |
| 4 | 4812129776 | Temperature sensor, cpl. | 1 | | | |
| 5 | 4812120900 | Connector | 1 | | | |
| 6 | 4812129775 | Temperature sensor | 1 | | | |
| 7 | 4812120901 | Connector | 1 | | | |

**Optional equipment** Brake release (option)

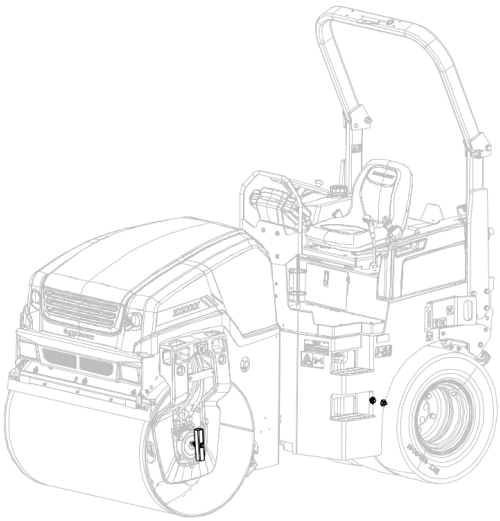

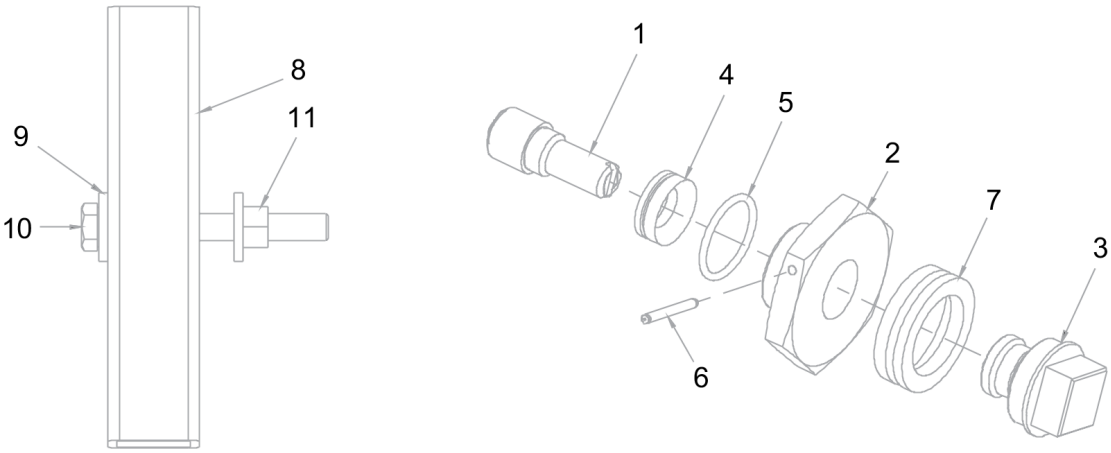

| Item | Part No. | Name | Qty | L | C | SN INFO |
|---|---|---|---|---|---|---|
| 0 | 4812130880 | Bake release device | 2 | | | |
| 1 | 4812130881 | Stud | 1 | | | |
| 2 | 4812130882 | Plug | 1 | | | |
| 3 | 4812130883 | Plug | 1 | | | |
| 4 | 4700904030 | Seal | 1 | | | |
| 5 | 4700160001 | O-ring | 1 | | | |
| 6 | 4700904029 | Pin | 1 | | | |
| 7 | 4700903835 | Seal | 1 | | | |
| 8 | 4700357892 | Stirrup | 1 | | | |
| 9 | 4700904213 | Steel plain washer, 13x30x4 mm HV | 2 | | | |
| 10 | 4700792550 | Screw M12x100 10.9 | 1 | | | |
| 11 | 4700928849 | Nut | 1 | | | |

**Optional equipment** Fire extinguisher

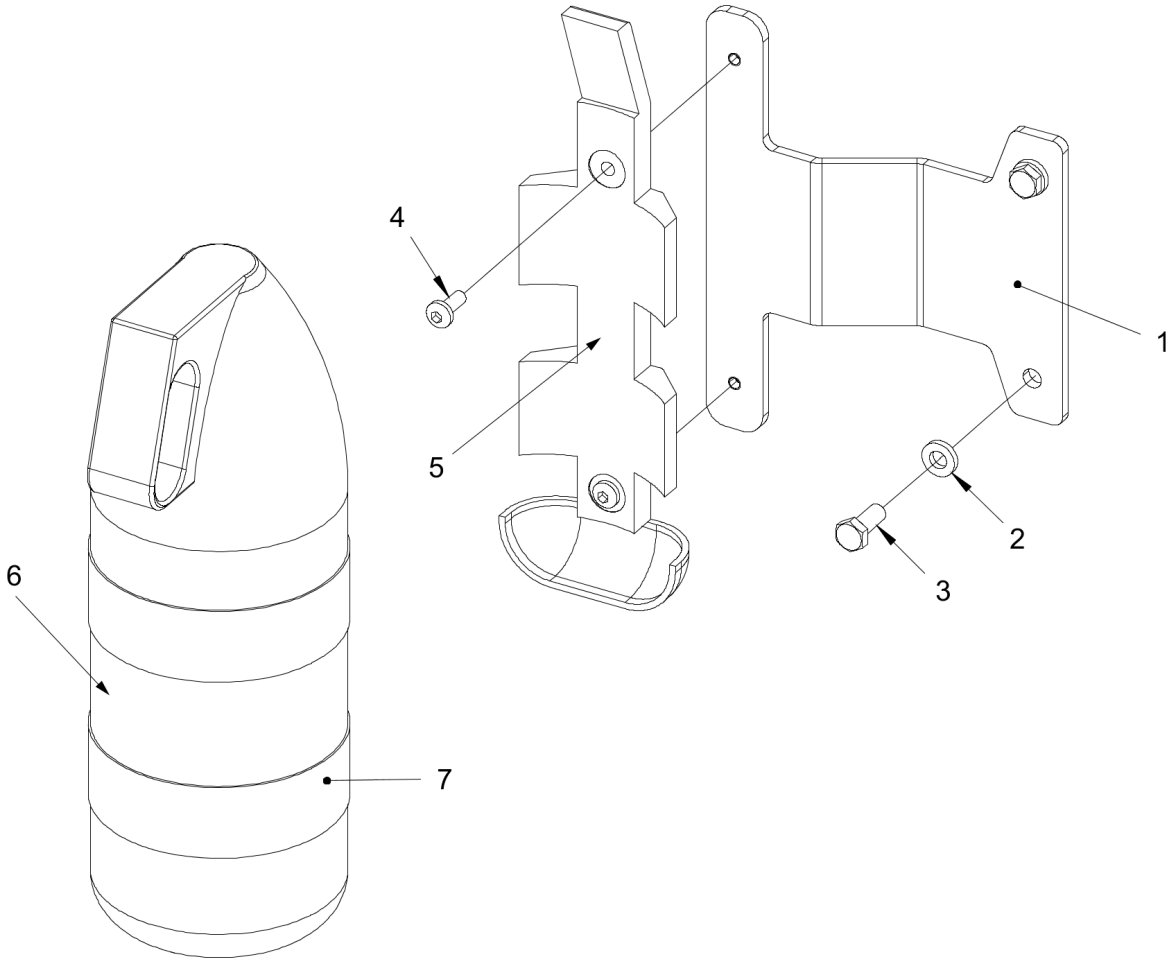

| Item | Part No. | Name | Qty | L | C | SN INFO |
|---|---|---|---|---|---|---|
| 1 | 4812125990 | Bracket | 1 | | | |
| 2 | 4700904556 | Steel plain washer | 2 | | | |
| 3 | 4700500053 | Screw, M8x20 mm 8.8 A2K | 2 | | | |
| 4 | 4700792185 | Screw M6x16 | 2 | | | |
| 5 | 4700378857 | Holder | 1 | | | |
| 6 | - | Fire extinguisher | 1 | | | |
| 7 | 4700378858 | Strap | 2 | | | |

**Optional equipment** SMV-sign

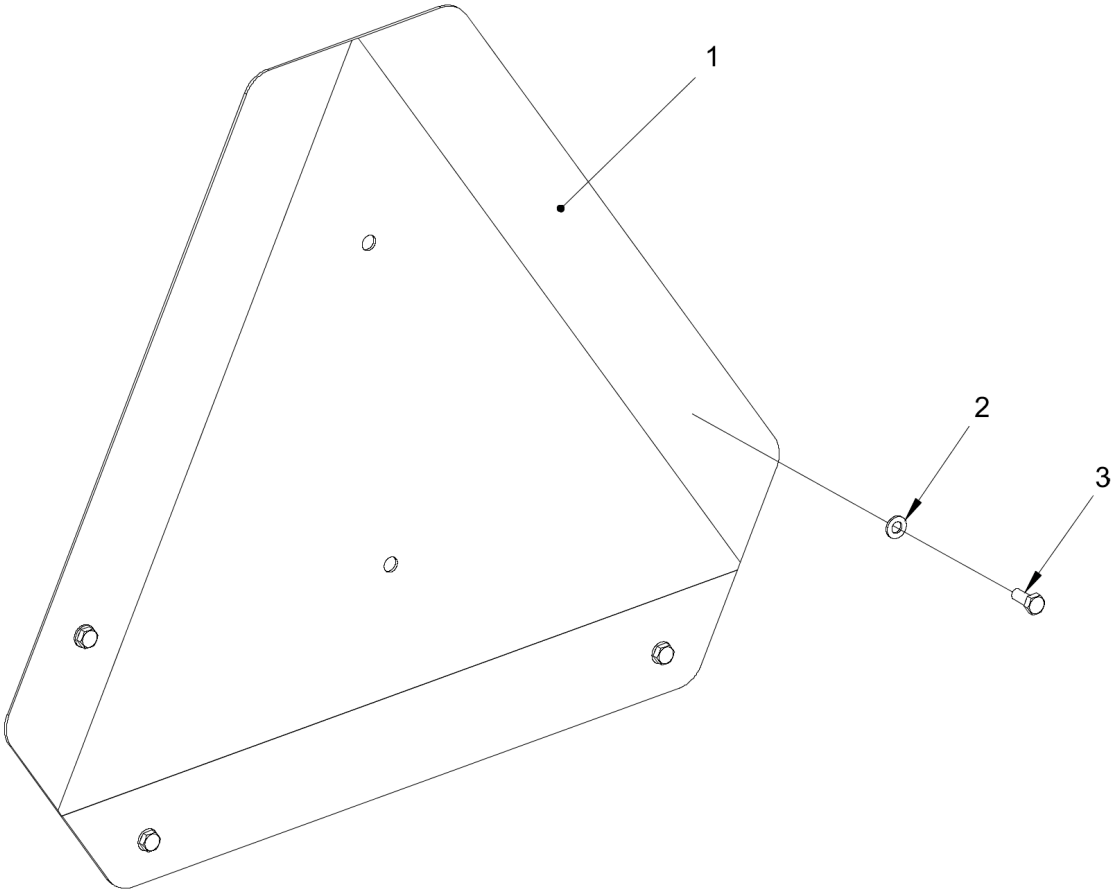

| Item | Part No. | Name | Qty | L | C | SN INFO |
|---|---|---|---|---|---|---|
| 1 | 4700476019 | SMV-sign | 1 | | | |
| 2 | 4700904281 | Steel plain washer | 4 | | | |
| 3 | 4700500004 | Hexagon head screw M5x12 | 4 | | | |

**Optional equipment** Dyn@Link GPS module

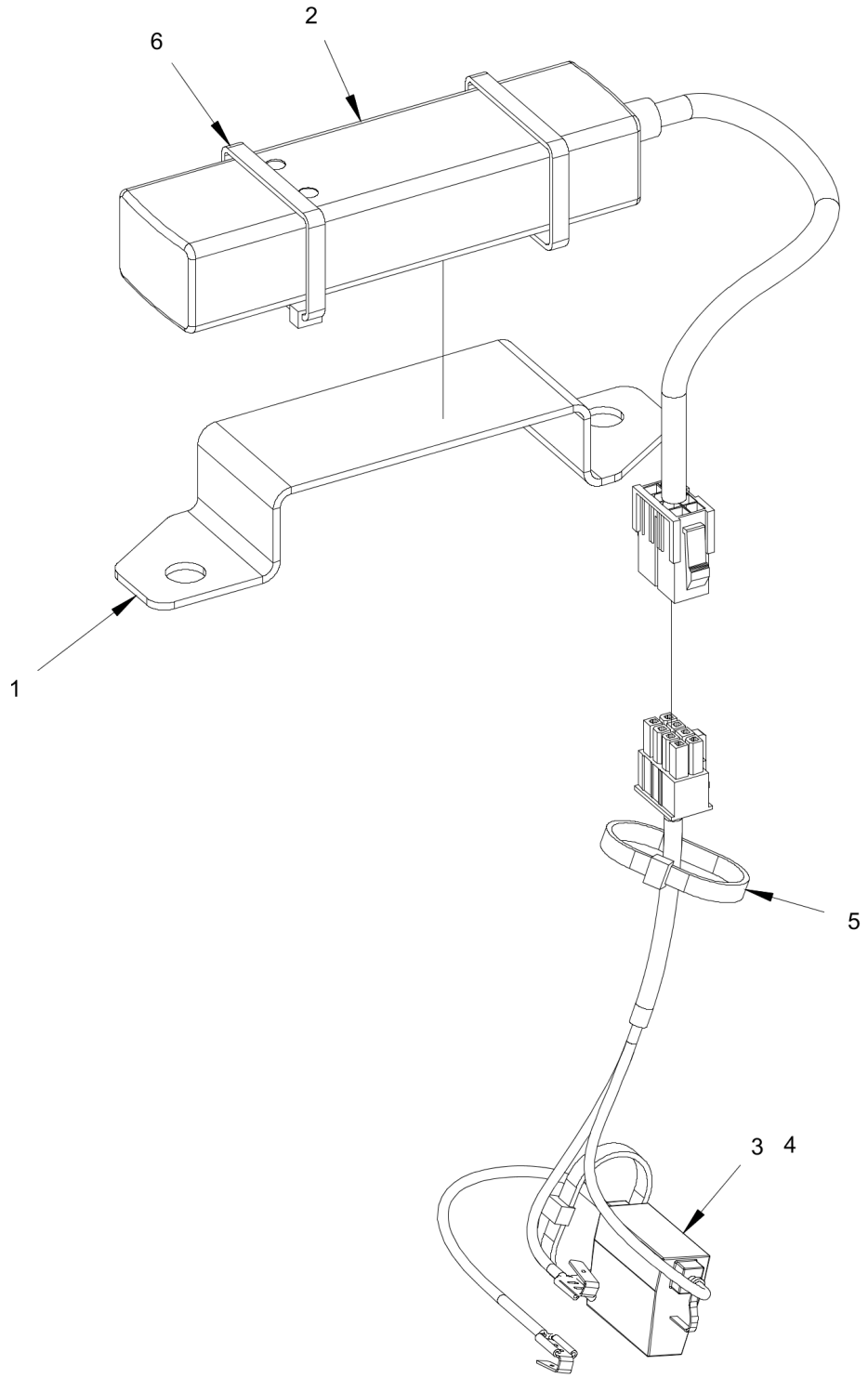

| Item | Part No. | Name | Qty | L | C | SN INFO |
|---|---|---|---|---|---|---|
| 1 | 4812127270 | Bracket | 1 | | | |
| 2 | 4812013038 | GPS Unit | 1 | | | |
| 3 | 4812124961 | Wiring harness | 1 | | | |
| 4 | 4700901225 | Fuse 5A Tan | 1 | | | |
| 5 | 4700313041 | Cable tie | 2 | | | |
| 6 | 4700792609 | Cable tie | 2 | | | |

## **Optional equipment** 4812013038 GPS module

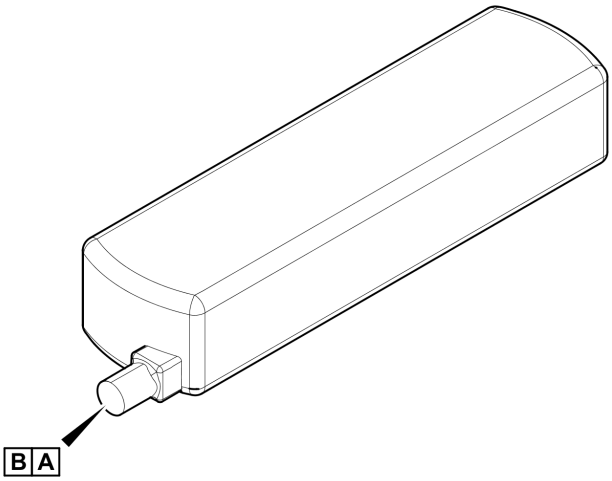


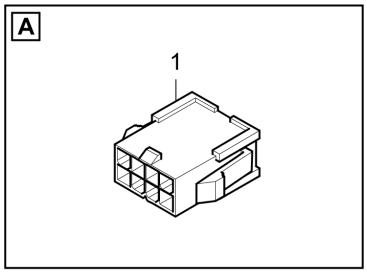


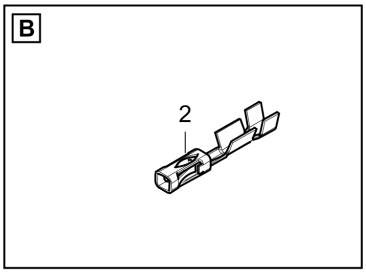


| Item | Part No. | Name | Qty | L | C | SN INFO |
|---|---|---|---|---|---|---|
| 1 | 4812013160 | Socket shell | 1 | | | |
| 2 | 4812013161 | Male contact | 3 | | | |

**Dynapac Compaction Equipment AB**
Box 504, SE 371 23 Karlskrona, Sweden

**www.dynapac.com**