F1000T T4f

Spare parts list

Tracked paver

F1000T s/n 10002124V0C003439-

Engine: Cummins QSB 6.7 – C225 T4f engine

© 2015 Dynapac (China) Compaction & Paving Equipment Co., Ltd | No.COJ_4812242660 | 2015-12

General information

Use only authorized parts. Any damage or malfunction caused by the use of unauthorized parts is not covered by Warranty or Product Liability.
Any unauthorized use or copying of the contents or any part thereof is prohibited. This applies in particular to trademarks, model denominations, part numbers, and drawings.

Instructions for use
This spare parts list contains no safety regulations and is merely intended to assist in the ordering of spare parts.
For information about operating, servicing, or repairing, the relevant Safety and operating instructions must be consulted at all costs.
Please observe the safety instructions listed in the relevant Safety and operating instructions!

Contents

F1000T (IV/T4) s/n 10002134CEC004555 - . . . 1

Service, repair and wear part kits

Service kit, track paver, T4i . . . 3
4812269054 Kit, start up, 100 Hrs . . . 5
4812269055 Kit, Maintenance, 500 Hrs . . . 7
4812269056 Kit, Maintenance, 1000 Hrs . . . 9

4812224490 Auger extensions

4812224490 Auger extensions . . . 11
D722182100 Extension, left . . . 13
D722182200 Extension, right . . . 15
D299010014 Kit, Inboard bearing, A . . . 17
4812224489 Auger extensions . . . 19
4812269057 Kit, hopper skirt . . . 21
4812244099 Kit, Hopper skirt - Low version . . . 23
4812223917 Assembly, conveyor chain . . . 25
4812269058 Kit, Chain, conveyor drive, track paver . . . 27

4812224488 Auger extensions

4812224488 Auger extensions . . . 29
D722182300 Extension, left . . . 31
D722182400 Extension, right . . . 33
4812269060 Kit, guide. conveyor . . . 35
4812269061 Kit, wear plate . . . 37
4812269062 Kit, sprocket, conveyor . . . 39
4812224504 Screed connecting parts . . . 41
D717954677 Kit, outboard bearing . . . 43
4812269064 Kit, conveyor bearing . . . 45
4812269086 Kit, rear plate, wheel . . . 47
Auger lubrication . . . 49
4812222082 Key . . . 51
4812269105 Kit, Auger reinforcement . . . 53
D717955090 Uptime kit . . . 55
4812313163 Bogie wheel kit . . . 57
4812313162 Service cable tool . . . 59

Mechanical

Frame assembly, 10' crawler paver

Frame assembly, 10' crawler paver . . . 61
Front conveyor cover, assembly . . . 65
Guide pole, assembly . . . 67
Adjustable scraper, assembly . . . 69
Fume extractor, assembly . . . 71
D717012501 Blower, Fume extractor . . . 73
4812222081 Beading, sealing plate . . . 75
4812223634 Cover, air filter, assembly . . . 77

Screed arm, assembly

Screed arm, assembly . . . 79
Assembly, slope arm . . . 82

Conveyor, assembly

Conveyor, assembly . . . 85

Assembly, conveyor drive complete

Assembly, conveyor drive complete . . . 87
Assembly, Motor and gear box . . . 89
Assembly, Drive, conveyor . . . 91
Assembly, tension . . . 93
4812223917 Assembly, conveyor chain . . . See page 25
Conveyor lubrication assembly . . . 95

Hopper, assembly 10FT
Hopper, assembly . . . 97
Hopper assembly, left side . . . 99
Hopper assembly, right side . . . 101

Basic auger 3000mm + 250 motor

4812249999 Basic auger 3000mm
4812249999 Basic auger 3000mm . . . 103
4812248248 Auger height guard assembly . . . 107
Auger gear . . . 109
4812203022 Basic auger flight assembly . . . 111
4812203040 Left extend auger 430-154 . . . 113
4812203017 Main auger bearing assembly . . . 115

4812203048 Base backplate assembly
4812203048 Base backplate assembly . . . 117
4812203045 Left main support plate assy . . . 119
4812203050 Right main support plate assy . . . 121
4812203041 Right extend auger . . . 123
Prevent segregation device . . . 125

4812204590 F1000 Center auger hydrl. kit 250 STD
4812204590 F10 Center auger hydraulic kit . . . 127
4812204592 Central auger motor . . . 129
4812204591 Center auger hose kit . . . 131

Operator platform

Platform, assembly
Platform, assembly . . . 133
LH operator station, assembly . . . 136
RH operator station, assembly . . . 140
Side doors, platform, assembly . . . 143
Footwell, assembly . . . 145
Divider complete, assembly . . . 147
Cooler shroud, assembly . . . 150
Anti slip tape, assembly . . . 154
Door assembly . . . 157
Foam complete, assembly . . . 161
Seat lock, assembly . . . 164
Hood frame, assembly . . . 167
Storage box . . . 169

Engine

F1000T/W engine system
F1000T T4f engine system . . . 171

Engine system
Engine system . . . 173
4812243085 Engine system . . . 177

Engine part
Engine part . . . 183
4812242985 QSB6.7 . . . 185
4812222043 Air cleaner . . . 187
Hose, engine oil drain . . . 189
Mounting Bracket Assembly . . . 191
4812243136 DEF Tank . . . 193

Cooling system
Cooling system . . . 195

4812222304 Combi cooler . . . 199
Exhaust system . . . 201

Drive

Track, assembly
Track, assembly . . . 203
Screed leveling guide assembly . . . 205

RH track undercarriage assembly
RH track undercarriage assembly . . . 207

Drive subassembly
Drive subassembly . . . 211
D717170600 Gearbox, track drive . . . 213
D717171014 Motor, propel . . . 217
Cylinder, track tension . . . 222
Assembly, hub, idler wheel . . . 225
Bogie assembly . . . 227

LH track undercarrage assembly
LH track undercarriage assembly . . . 229
Bogie assembly . . . See page 227
Cylinder, track tension . . . See page 222
Assembly, hub, idler wheel . . . See page 225

Drive subassembly
Drive subassembly . . . See page 211
D717170600 Gearbox, track drive . . . See page 213
D717171014 Motor, propel . . . See page 217

Hydraulic system

Hydraulic component, assembly
Hydraulic component, assembly . . . 233
D717091001 Auger lift cylinder . . . 239
D717091503 Cylinder, screed level, front . . . 241
D717091501 Cylinder, hopper pivot . . . 243
Accumulator, Track tension circuit . . . 245

Valve bank, rear, work function
Valve bank, rear, work function . . . 247

D717091507 Valve bank, rear work function
D717091507 Valve bank, rear work function . . . 249
D717953711 HIC, rear valve . . . 251

Front manifold
Front manifold . . . 253
4812200104 Front manifold . . . 255

HIC assy, propel gearbox & pump
HIC assy, propel gearbox & pump . . . 258
D717090503 HIC,propel gearbox & pump . . . 261

Valve assy, vibration
Valve assy, vibration . . . 263
D717091508 Valve, vibration . . . 265
4812220876 Filter, auger charge oil . . . 267

Assembly, hydraulic tank
Assembly, hydraulic tank . . . 269
4812220770 Assembly, hydraulic filter tier IV . . . 273
Assembly, tow point indicator . . . 275

Hose kit . . . 277
Case drain manifold assembly . . . 283
Fuel tank, assembly . . . 285
4812247660 Fuel tank, assembly . . . 289

Pump drive, assembly
Pump drive, assembly . . . 293
4812200078 Gear box, splitter . . . 298
D717191000 Pump, propel front, assembly . . . 303
D717191500 Pump, propel rear, assembly . . . 314
D717192500 Pump, auger tandem, assembly . . . 326
D717193001 Pump, vibration . . . 336
4812222519 Gear pump, fan drive . . . 339
D717193500 Pump, generator, assembly . . . 341
Fittings, assembly . . . 350

Electric system

Electrical system, assembly
Electrical System Assembly . . . 353

Generator drive
Generator drive . . . 357
D717100501 Generator . . . 359
Kit, lovejoy coupling . . . 361
4812246972 Assembly, DC control panel . . . 363

4812223611 Assembly, battery box
Assembly, battery box . . . 367
4812220887 Battery switch mount . . . 369

4812246958 Assembly, operator console, LH
4812246958 Assembly, Operater Console LH . . . 371

D717101501 Controller, propel handle
D717101501 Controller, propel handle . . . 375
4812270342 Maintained center . . . 377

4812246959 Assembly, operator console, RH
4812246959 Assembly Operater Console RH . . . 379

D717101501 Controller, propel handle
D717101501 Controller, propel handle . . . See page 375
4812270342 Maintained center . . . See page 377
D717104500 Assembly, AC main panel . . . 383
Lighting system Tier IV . . . 385
Auger & conveyor controls . . . 388
D717906000 Roading lights assembly . . . 391

Accessories

Accessories
Accessories . . . 393
4812222082 Key . . . See page 51
D717955090 Uptime kit . . . See page 55
D717906000 Roading lights assembly . . . See page 391
Beacon assembly . . . 395
4812224333 Wash down, assembly . . . 397
D717905000 Auxiliary power panel . . . 399
4812224504 Screed connecting parts . . . See page 41

4812223939 Push roller crosshead
4812223939 Push roller crosshead . . . 401
4812223943 Roller assembly . . . 403

Decal installation . . . 405

Options

Extension auger 1ft kit

Extension auger 1 FT kit . . . 410
4812248823 Left extension auger 1FT kit . . . 413
Extend auger 380-2 left . . . 415
4812204563 Left extend auger . . . 417
4812248825 Right extension auger 1FT kit . . . 419
Extend auger 380-2 right . . . 421
4812204580 Right extend auger . . . 423

Extension auger 2ft kit

4812204104 Extend auger 2ft kit . . . 425
4812204465 Extend auger 380-4 left . . . 427
4812204467 Extend auger 380-4 right . . . 429

Extension auger 3ft kit

4812204768 Extend auger 3ft kit . . . 431
4812204766 Left extend auger 3ft kit . . . 433
4812204465 Extend auger 380-4 left . . . See page 427
Left bearing retainer assembly . . . 435
Bearing retainer assembly . . . 437
4812204563 Left extend auger . . . See page 417
4812204767 Right extend auger 3ft kit . . . 439
4812204467 Extend auger 380-4 right . . . See page 429
Right bearing retainer assembly . . . 441
4812204580 Right extend auger . . . See page 423

4812248808 Auger for 19ft paving width

4812248808 Auger for 19 ft paving width . . . 443
4812204102 Striker plate width 320mm kit . . . 445

Extension auger 1ft kit

Extension auger 1 FT kit . . . See page 410
4812248823 Left extension auger 1FT kit . . . See page 413
Extend auger 380-2 left . . . See page 415
4812204563 Left extend auger . . . See page 417
4812248825 Right extension auger 1FT kit . . . See page 419
Extend auger 380-2 right . . . See page 421
4812204580 Right extend auger . . . See page 423

4812204103 Bearing retainer kit

4812204103 Bearing retainer kit . . . 447
Right bearing retainer assembly . . . See page 441
Left bearing retainer assembly . . . See page 435
Bearing retainer assembly . . . See page 437
Extend auger 380-2 left . . . See page 415
4812204467 Extend auger 380-4 right . . . See page 429

4812248828 Auger for 26ft paving width

4812248828 Auger for 26ft paving width . . . 449

Extension auger 2ft kit

Extension auger 2FT kit . . . 451
4812248826 Left extension auger 2FT kit . . . 453
4812204563 Left extend auger . . . See page 417
Extend auger 380-2 left . . . See page 415
4812248829 Right extension auger 2FT kit . . . 455
Extend auger 380-2 right . . . See page 421
4812204580 Right extend auger . . . See page 423
4812204102 Striker plate width 320mm kit . . . See page 445

4812204099 Support rods kit assembly
4812204099 Support rods kit assembly . . . 457
4812204446 Pull rod 2000mm . . . 459
4812204468 Pull rod 3800mm . . . 461
4812204100 Striker plate width 960mm kit . . . 463
4812204101 Striker plate width 640mm kit . . . 465

4812204103 Bearing retainer kit
4812204103 Bearing retainer kit . . . See page 447
Right bearing retainer assembly . . . See page 441
Left bearing retainer assembly . . . See page 435
Bearing retainer assembly . . . See page 437

Extension auger 2ft kit
4812204104 Extend auger 2ft kit . . . See page 425
4812204465 Extend auger 380-4 left . . . See page 427
4812204467 Extend auger 380-4 right . . . See page 429

4812224490 Auger extensions
4812224490 Auger extensions . . . See page 11
D722182100 Extension, left . . . See page 13
D722182200 Extension, right . . . See page 15

4812224488 Auger extensions
4812224488 Auger extensions . . . See page 29
D722182300 Extension, left . . . See page 31
D722182400 Extension, right . . . See page 33
4812224489 Auger extensions . . . See page 19

4812204811 Outboard auger

Auger, assembly
Auger, assembly . . . 467

4812246868 Auger assembly without flight
Auger assembly without flight . . . 470

D722180000 Auger
D722180000 Auger . . . 473
D754111500 Pipeline, grease, auger . . . 475
D722181600 Auger . . . 477
D756183300 Auger gear . . . 479
D722183400 Engine support . . . 483
Hose retention, assembly . . . 485
Auger lubrication . . . See page 49
4812204760 Outboard auger . . . 487

4812204088 Hydraulic tunnel assembly
4812204088 Hydraulic tunnel assy . . . 489
4812204089 Left hydraulic tunnel assy . . . 491
Oil tube protect plate assembly . . . 494
4812204090 Right hydraulic tunnel assy . . . 497
4812204581 F1000 Tunnel option hydrl. kit . . . 499
4812204582 F1000 Tunnel Option Hic Assy . . . 501
4812204588 F1000 Tunnel hose kit . . . 503

4812204813 Hydraulic tunnel field kit
4812204813 Hydraulic tunnel field kit . . . 505

4812204088 Hydraulic tunnel assembly
4812204088 Hydraulic tunnel assy . . . See page 489
4812204089 Left hydraulic tunnel assy . . . See page 491
Oil tube protect plate assembly . . . See page 494

4812204090 Right hydraulic tunnel assy . . . . . See page 497
4812204581 F1000 Tunnel option hydrl. kit . . . . . See page 499
4812204582 F1000 Tunnel Option Hic Assy . . . . . See page 501
4812204588 F1000 Tunnel hose kit . . . . . See page 503

4812204602 Center auger hydraulic kit

4812204602 Center auger hydraulic kit 507
4812204603 Central auger motor 200 509
4812204591 Center auger hose kit . . . . . See page 131

4812222848 Front wheel assist

4812222848 Front wheel assist 511
4812241708 HIC assy, front wheel assist 514
4812241709 Valve assy, steering priori 517
4812222838 Option, Tunnel extensions kit 519
D717102501 Leveling control 521
4812222846 Hand rail assembly 523
D717904500 Umbrella 525
D717900500 Option, layton truck hitch 527

4812244902 AUS country package

4812244902 AUS country package 529
4812244624 AUS cable post assembly 531
4812244517 Pedal assy for AUS 533
4812244105 Tow point indicator AUS 535
Assembly, tow point indicator . . . . . See page 275

4812222847 Kit, wide width paving

4812222847 Kit, wide width paving 537
4812222838 Option, Tunnel extensions kit . . . . . See page 519
4812224357 Kit, mounting components 540
D722182300 Extension, left . . . . . See page 31
D722182100 Extension, left . . . . . See page 13
D722182400 Extension, right . . . . . See page 33
D722182200 Extension, right . . . . . See page 15
Appendix B:Parts Index 544

F1000T (IV/T4) s/n 10002134CEC004555 -

NO DRAWING AVAILABLE FOR THIS BOM

Item	Part No.	Name	Qty	L	SN INFO
1	4812200036	Frame, assembly	1		
2		F1000T/W engine system	1		
3		Platform, assembly	1		
4	4812242660	Fuel tank, assembly	1		
5	4812200014	Pump drive, assembly	1		
6		Hydraulic component, assembly	1		
7	4812223607	Electrical system, assembly	1		
8	4812222834	Conveyor, assembly	1		
9	4812223423	Hopper, assembly 10FT	1		
10	4812223300	Track, assembly	1		
11	4812222835	Auger, assembly	1		
12	4812223532	Screed arm, assembly	1		
13	4812200019	Decal installation	1		
14		Accessories	1		
15		Optional Equipment	1		

Service, repair and wear part kits Service kit, track paver, T4i

NO DRAWING AVAILABLE FOR THIS BOM

Item	Part No.	Name	Qty	L	SN INFO
1	4812269054	Kit, startup, 100hr	1		
2	4812269055	Kit, maintenance, 500hr	1		
3	4812269056	Kit, maintenance, 1000hr	1		
4	D299010014	Kit, inboard bearing	1		
5	4812224489	Kit, 11", auger extension	1		
6	4812224490	Kit, 17", auger extension	1		
7	4812224488	Kit, 34", auger extension	1		
8	4812269057	Kit, hopper front	1		
9	4812244099	Kit, hopper skirt-low version	1		
10	4812223917	Assembly, conveyor chain	1		
11	4812269060	Kit, guide. conveyor	1		
12	4812269061	Kit, wear plate	1		
13	4812269062	Kit, sprocket, conveyor	1		
14	4812224504	Kit, screed, disconnect	1		
15	D717954677	Kit, outboard bearing	1		
16	4812269064	Kit, conveyor bearing	1		
17	4812269086	Kit, rear plate, wheel	1		
18	4812269087	Kit, rear plate, track	1		
19	4812200217	Auger lubrication	1		
20	D717955090	Uptime kit	1		
21	4812222082	Key replacement kit	1		
22	4812269105	Kit, Auger reinforcement	1		
23	4812269058	Kit, chain, conveyor drive	1		

Service, repair and wear part kits 4812269054 Kit, start up, 100 Hrs

NO DRAWING AVAILABLE FOR THIS BOM

Item	Part No.	Name	Qty	L	SN INFO
1	4812220916	Pre-fuel filter element	1		
2	4812220918	Fuel filter element	1		
3	4812220885	Filter, replacement	1		
4	4812269104	Kit, seal	1		
5	4812220749	Element, high pressure filter	1		
6	4812269103	Kit, seal	1		
7	D717951135	Kit, seal rkm400	1		
8	4812220771	Element, filter	1		

Service, repair and wear part kits 4812269055 Kit, Maintenance, 500 Hrs

NO DRAWING AVAILABLE FOR THIS BOM

Item	Part No.	Name	Qty	L	SN INFO
1	4812220919	Engine oil filter	1		
2	4812220916	Pre-fuel filter element	1		
3	4812220918	Fuel filter element	1		
4	4812220921	Airfilter main	1		
5	4812220922	Airfilter safety	1		

Service, repair and wear part kits 4812269056 Kit, Maintenance, 1000 Hrs

NO DRAWING AVAILABLE FOR THIS BOM

Item	Part No.	Name	Qty	L	SN INFO
1	4812220919	Engine oil filter	1		
2	4812220916	Pre-fuel filter element	1		
3	4812220918	Fuel filter element	1		
4	4812220921	Airfilter main	1		
5	4812220922	Airfilter safety	1		
6	4812220920	Belt, v-ribbed	1		
7	4812220885	Filter, replacement	1		
8	4812269104	Kit, seal	1		
9	4812220749	Element, high pressure filter	1		
10	4812269103	Kit, seal	1		
11	D717951135	Kit, seal rkm400	1		
12	4812220771	Element, filter	1		

4812224490 Auger extensions 4812224490 Auger extensions

NO EXPLODED VIEW
AVAILABLE
FOR THIS BOM

Item	Part No.	Name	Qty	L	SN INFO
0	4812224490	Kit, 17", auger extension	1		
1	4812042528	Auger shaft, l.h.	1		
2	4812041337	Wear plate LH	5		
3	4812244891	Wear segment, LH	6		
4	4812245546	Bolt	24		
5	0291118549	Hexagon nut	24		
6	4812042526	Auger shaft, r.h.	1		
7	4812241339	Wear plate RH	5		
8	4812244890	Wear segment, RH	6		

4812224490 Auger extensions D722182100 Extension, left

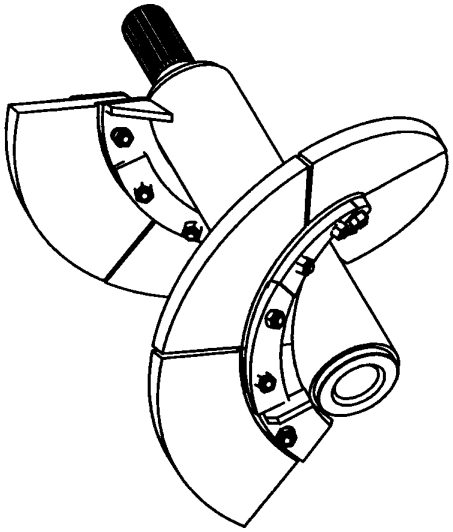

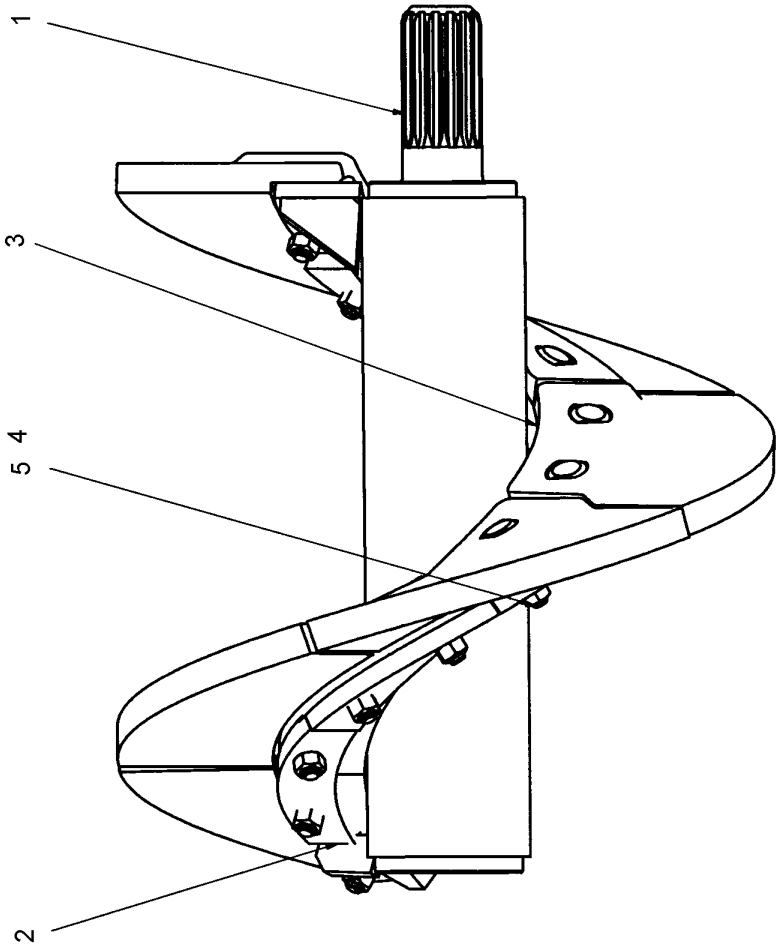

Item	Part No.	Name	Qty	L	SN INFO
1	4812042528	Auger shaft, l.h.	1		
2	4812241337	Wear plate LH	5		
3	4812244891	Wear segment, LH	6		
4	4812245546	Bolt	12		
5	0291118549	Hexagon nut	12		

4812224490 Auger extensions D722182200 Extension, right

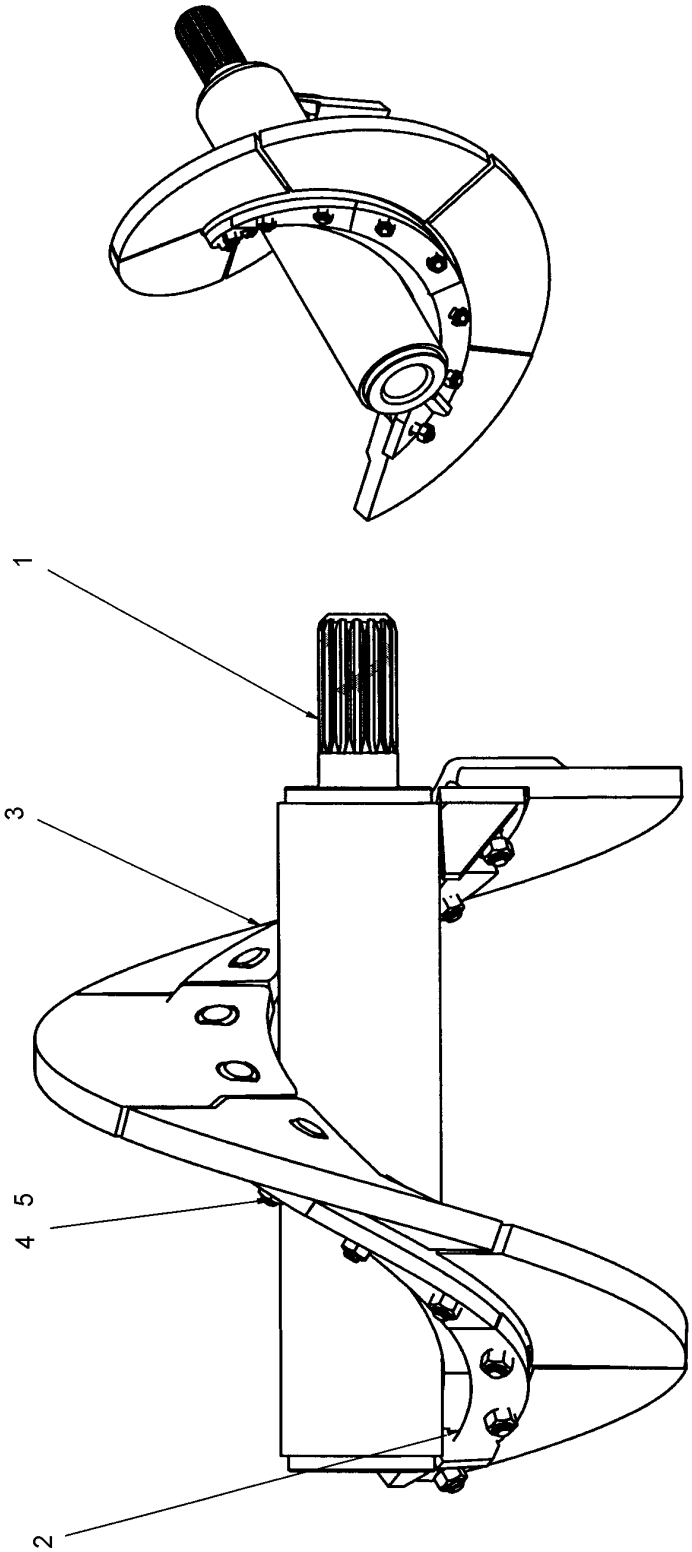

Item	Part No.	Name	Qty	L	SN INFO
1	4812042526	Auger shaft, r.h.	1		
2	4812241339	Wear plate RH	5		
3	4812244890	Wear segment, RH	6		
4	4812245546	Bolt	12		
5	0291118549	Hexagon nut	12		

Service, repair and wear part kits D299010014 Kit, Inboard bearing, A

NO DRAWING AVAILABLE FOR THIS BOM

Item	Part No.	Name	Qty	L	SN INFO
0	D299010014	Kit, inboard bearing	1		
1	D772181750	Bearing bushing, compl.	1		
2	4812040159	Ring	1		
3	0324155212	Adjusting washer	1		
4	0324155213	Adjusting washer	1		
5	0324155224	Adjusting washer	1		
6	D932211691	O-ring	2		
7	D935194411	Bearing	1		
8	D935194413	Bearing	1		
9	D935022420	Roller bearing	1		
10	4812040158	Ring	1		

Service, repair and wear part kits 4812224489 Auger extensions

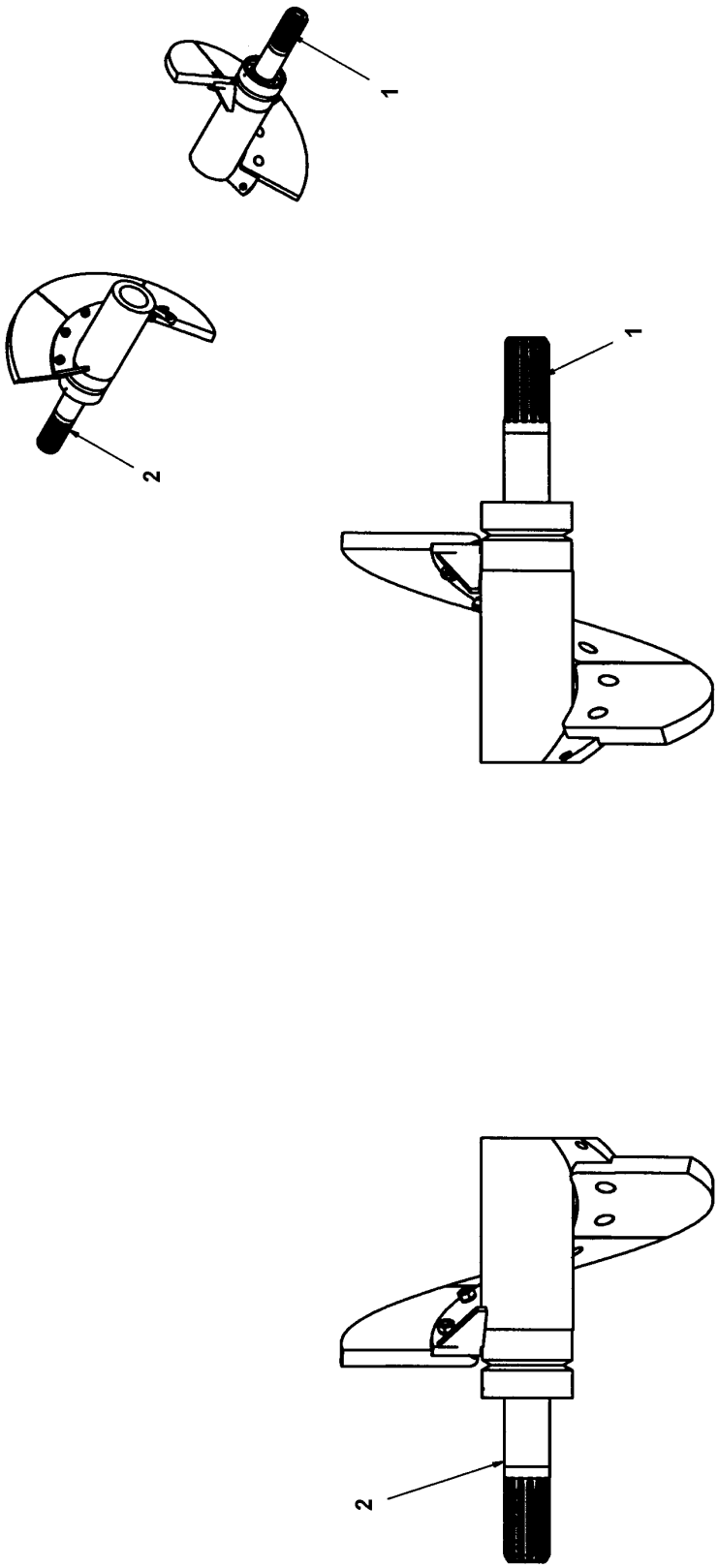

Item	Part No.	Name	Qty	L	SN INFO
1	D722181900	Auger, left 290 mm	1		
2	D722182000	Auger right 290 mm	1		

Service, repair and wear part kits 4812269057 Kit, hopper skirt

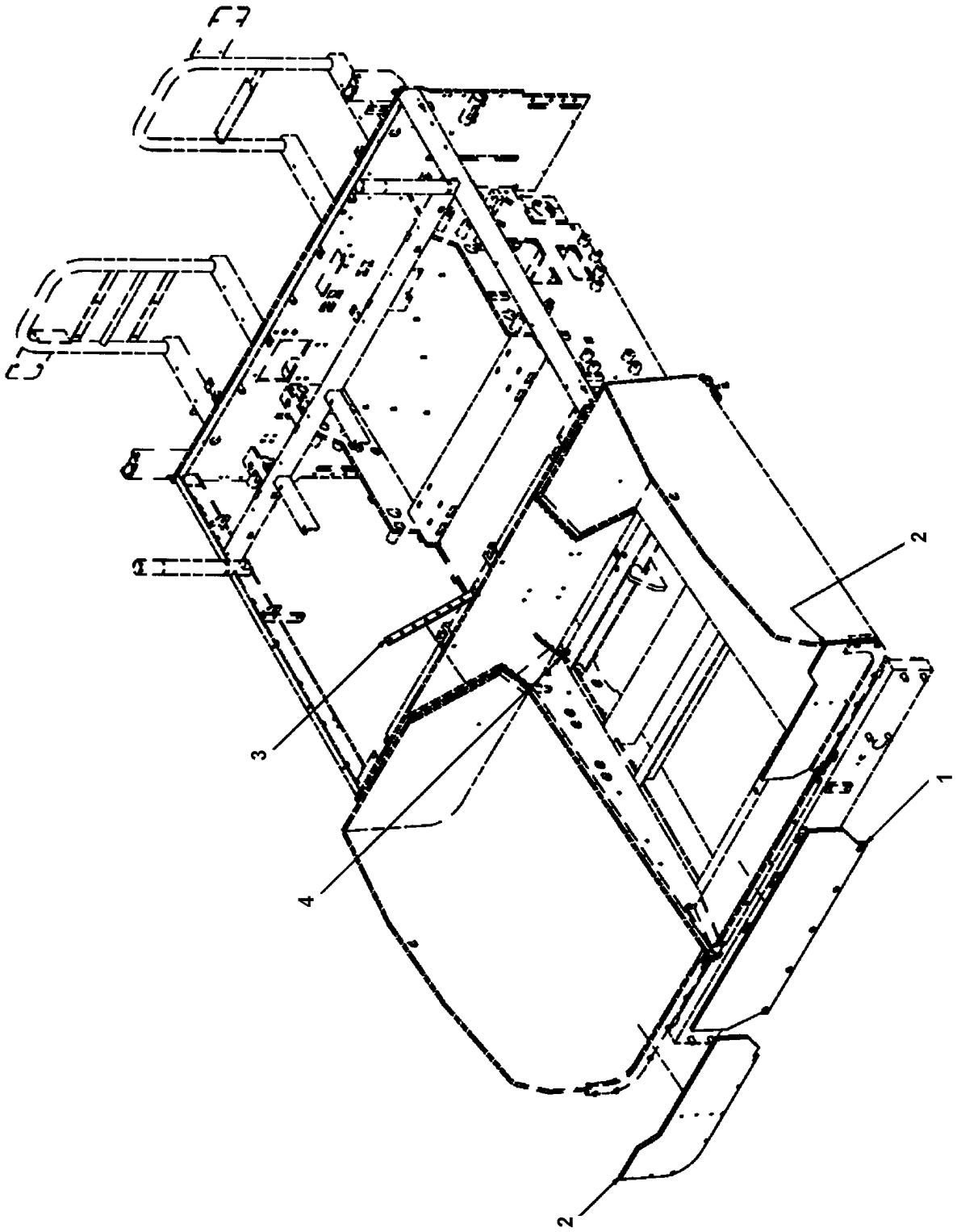

Item	Part No.	Name	Qty	L	SN INFO
1	4812223788	Skirt, hopper front	1		
2	4812223789	Skirt, hopper sides	2		
3	4812223540	Wiper, long	2		
4	4812223541	Wiper	2		

Service, repair and wear part kits 4812244099 Kit, Hopper skirt - Low version

NO DRAWING AVAILABLE FOR THIS BOM

Item	Part No.	Name	Qty	L	SN INFO
1	4812243390	Skirt hopper sides	2		
2	4812243391	Skirt, hopper front	1		
3	4812243392	Skirt LH, hopper	1		
4	4812243393	Skirt RH, hopper	1		

Service, repair and wear part kits 4812223917 Assembly, conveyor chain

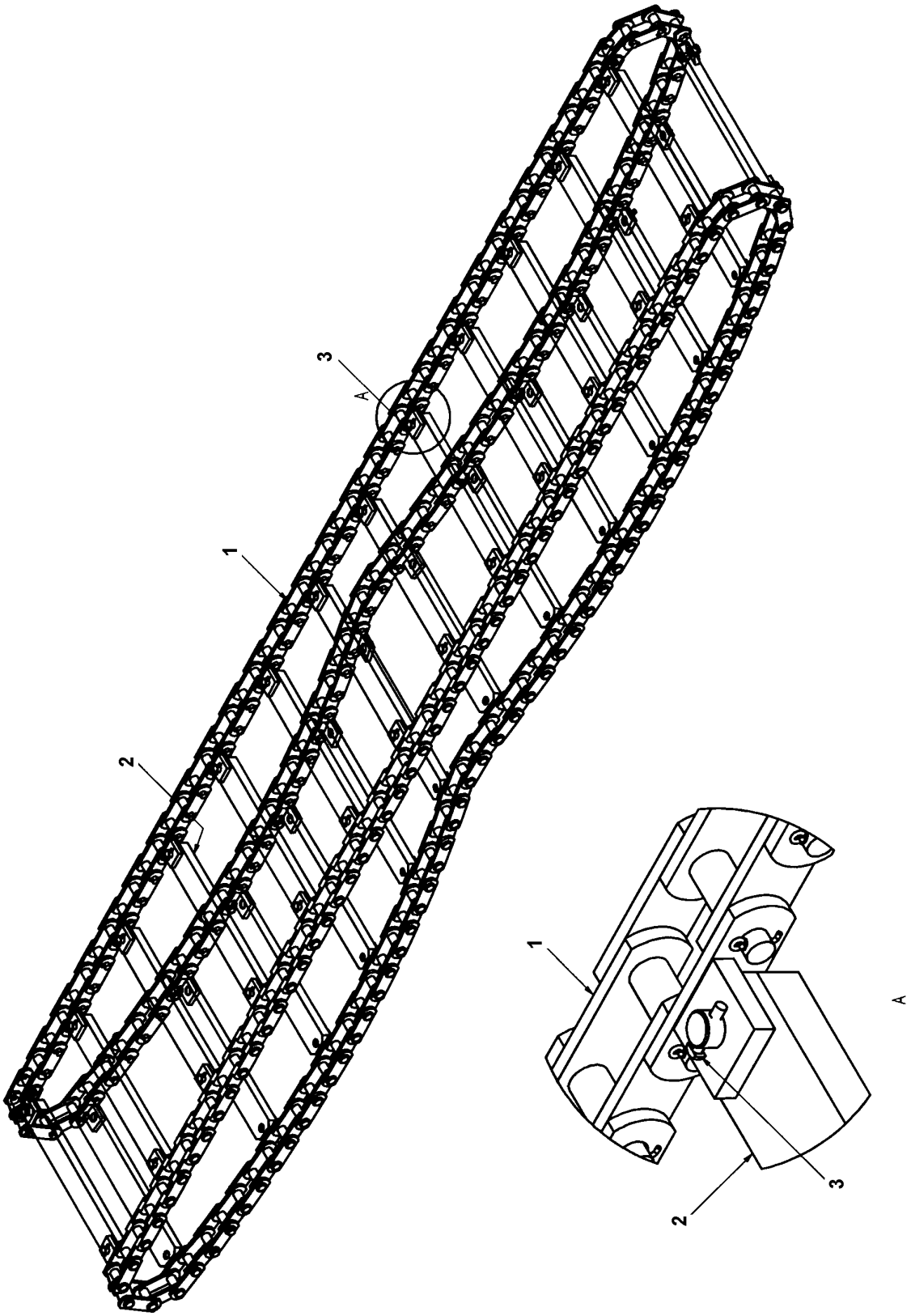

Item	Part No.	Name	Qty	L	SN INFO
1	D717061501	Chain	2		
2	4812223918	Conveyor crossbar	26		
3	4812200009	Lock pin	52		

Service, repair and wear part kits 4812269058 Kit, Chain, conveyor drive, track paver

NO DRAWING AVAILABLE FOR THIS BOM

Item	Part No.	Name	Qty	L	SN INFO
0	4812269058	Kit, chain, conveyor drive	1		
1	4812222240	Roller chain	2		
2	4812242602	Sprocket	2		
3	D717061001	Sprocket, no.100	2		
4	D717952374	Key,driveshaft	2		

4812224488 Auger extensions 4812224488 Auger extensions

NO EXPLODED VIEW
AVAILABLE
FOR THIS BOM

Item	Part No.	Name	Qty	L	SN INFO
0	4812224488	Kit, 34", auger extension	1		
1	4812042532	Auger shaft, l.h.	1		
2	4812041337	Wear plate LH	11		
3	4812244891	Wear segment, LH	12		
4	4812245546	Bolt	48		
5	0291118549	Hexagon nut	48		
6	4812042530	Auger shaft, r.h.	1		
7	4812241339	Wear plate RH	11		
8	4812244890	Wear segment, RH	12		

4812224488 Auger extensions D722182300 Extension, left

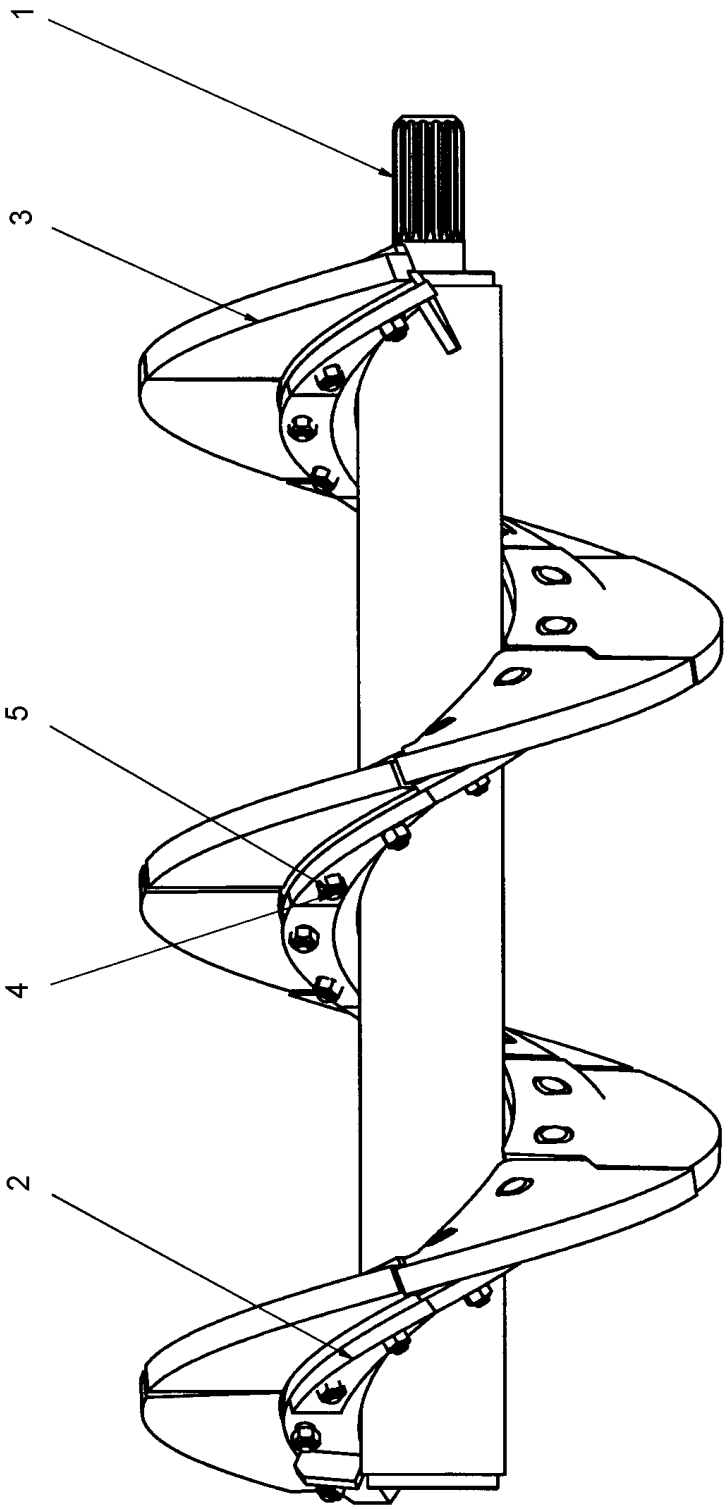

Item	Part No.	Name	Qty	L	SN INFO
1	4812042532	Auger shaft, l.h.	1		
2	4812241337	Wear plate LH	11		
3	4812244891	Wear segment, LH	12		
4	4812245546	Bolt	24		
5	0291118549	Hexagon nut	24		

4812224488 Auger extensions D722182400 Extension, right

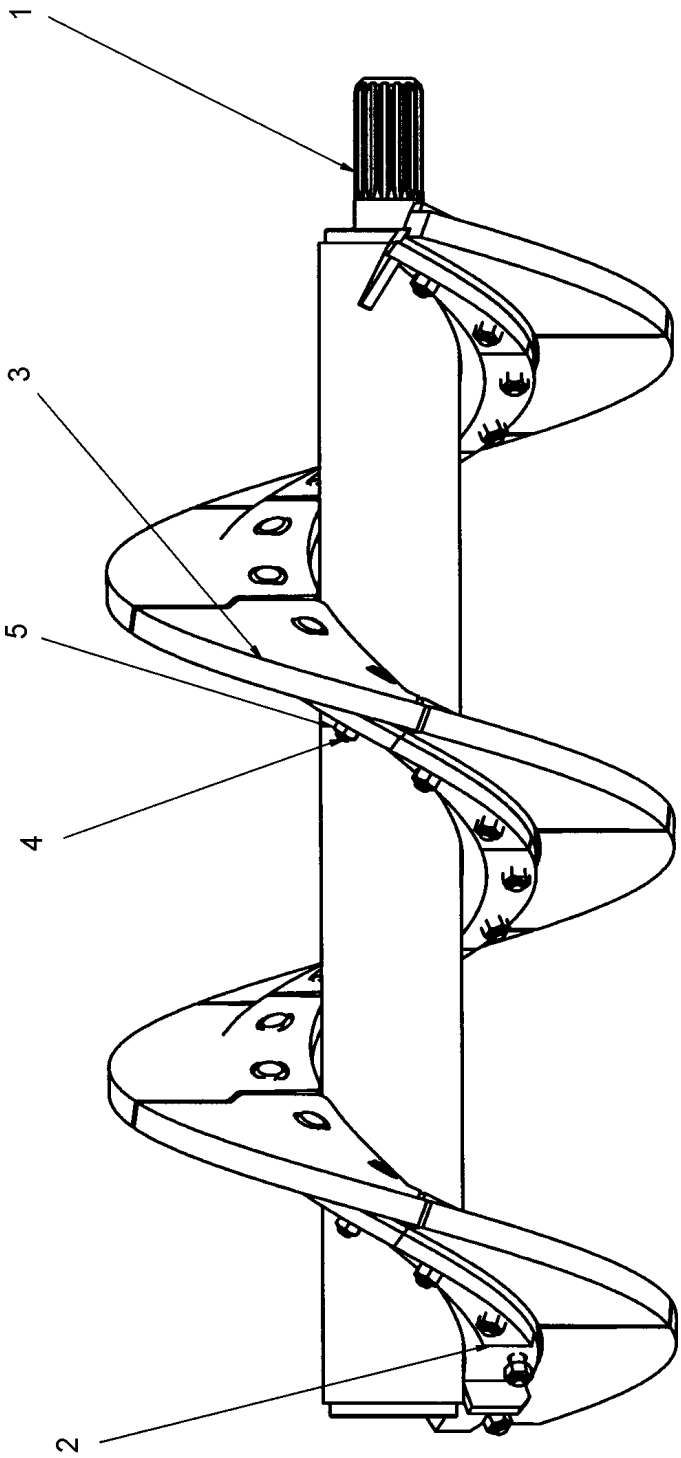

Item	Part No.	Name	Qty	L	SN INFO
1	4812042530	Auger shaft, r.h.	1		
2	4812241339	Wear plate RH	11		
3	4812244890	Wear segment, RH	12		
4	4812245546	Bolt	24		
5	0291118549	Hexagon nut	24		

Service, repair and wear part kits 4812269060 Kit, guide. conveyor

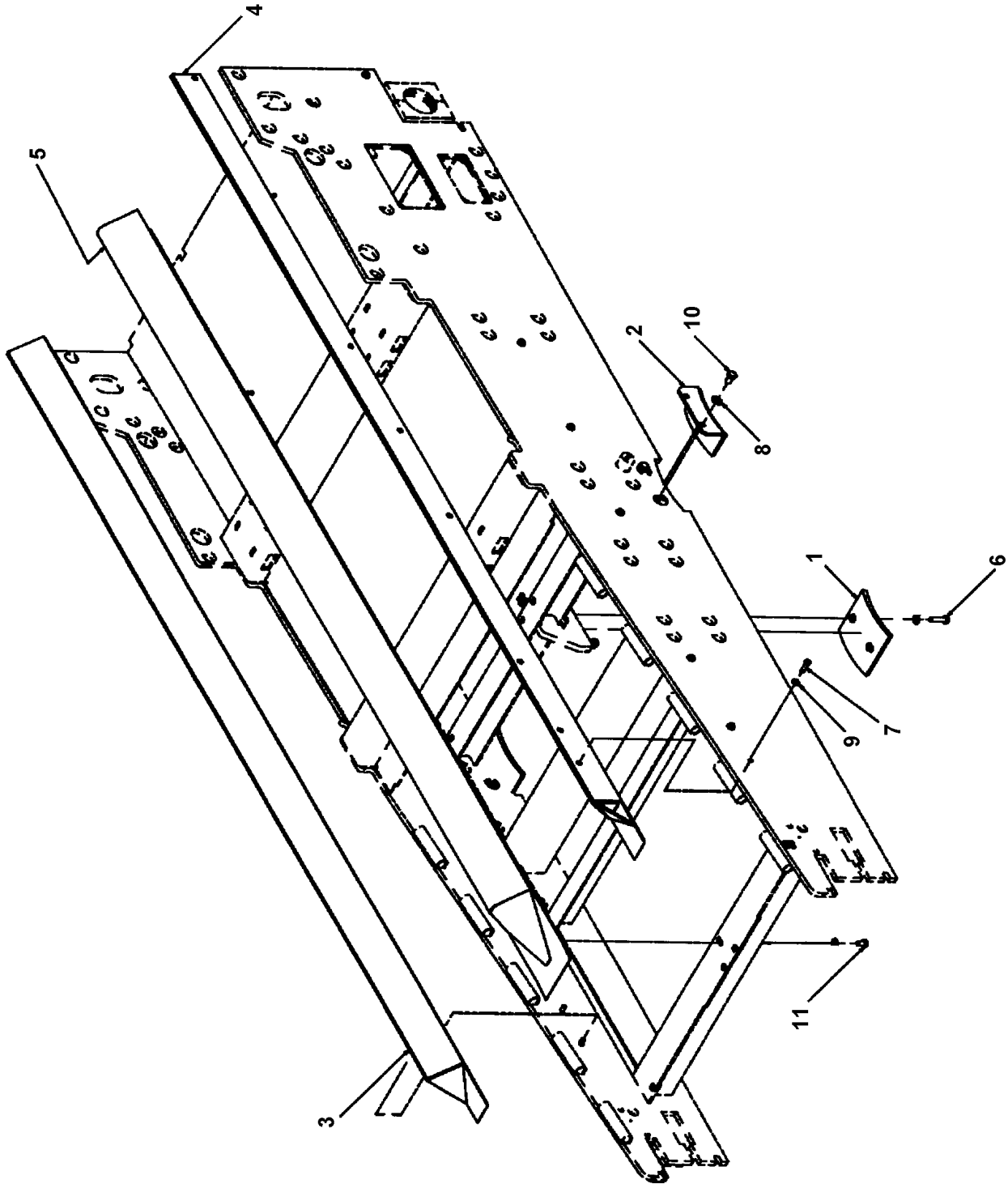

Item	Part No.	Name	Qty	L	SN INFO
0	4812269060	Kit, guide. conveyor			
1	4812223926	Guide plate, right			
2	4812223928	Guide plate, middle			
3	4812223921	Guide plate, left			
4	4812223997	Screw			
5	4812223878	Washer			
6	4812223935	Outer chain support			
7	D939776124	Washer			
8	5540084600	Hexagon head screw			
9	4812223501	Middle chain support			
10	4812223998	Screw			
11	4812223999	Washer			
12	4812224001	Screw			
13	D939776113	Washer			
14	0147132303	Hex head screw M8 x 20			

Service, repair and wear part kits 4812269061 Kit, wear plate

NO EXPLODED VIEW
AVAILABLE
FOR THIS BOM

Item	Part No.	Name	Qty	L	SN INFO
0	4812269061	Kit, wear plate			
1	4812223913	Floor, rear right			
2	4812223909	Floor, front right			
3	4812223907	Floor, front left			
4	4812223911	Floor, rear left			
5	4812223881	Conveyor drive cover			
6	0291118549	Hexagon nut			
7	4812223879	Narrow washer			
8	D939776115	Washer			

Service, repair and wear part kits 4812269062 Kit, sprocket, conveyor

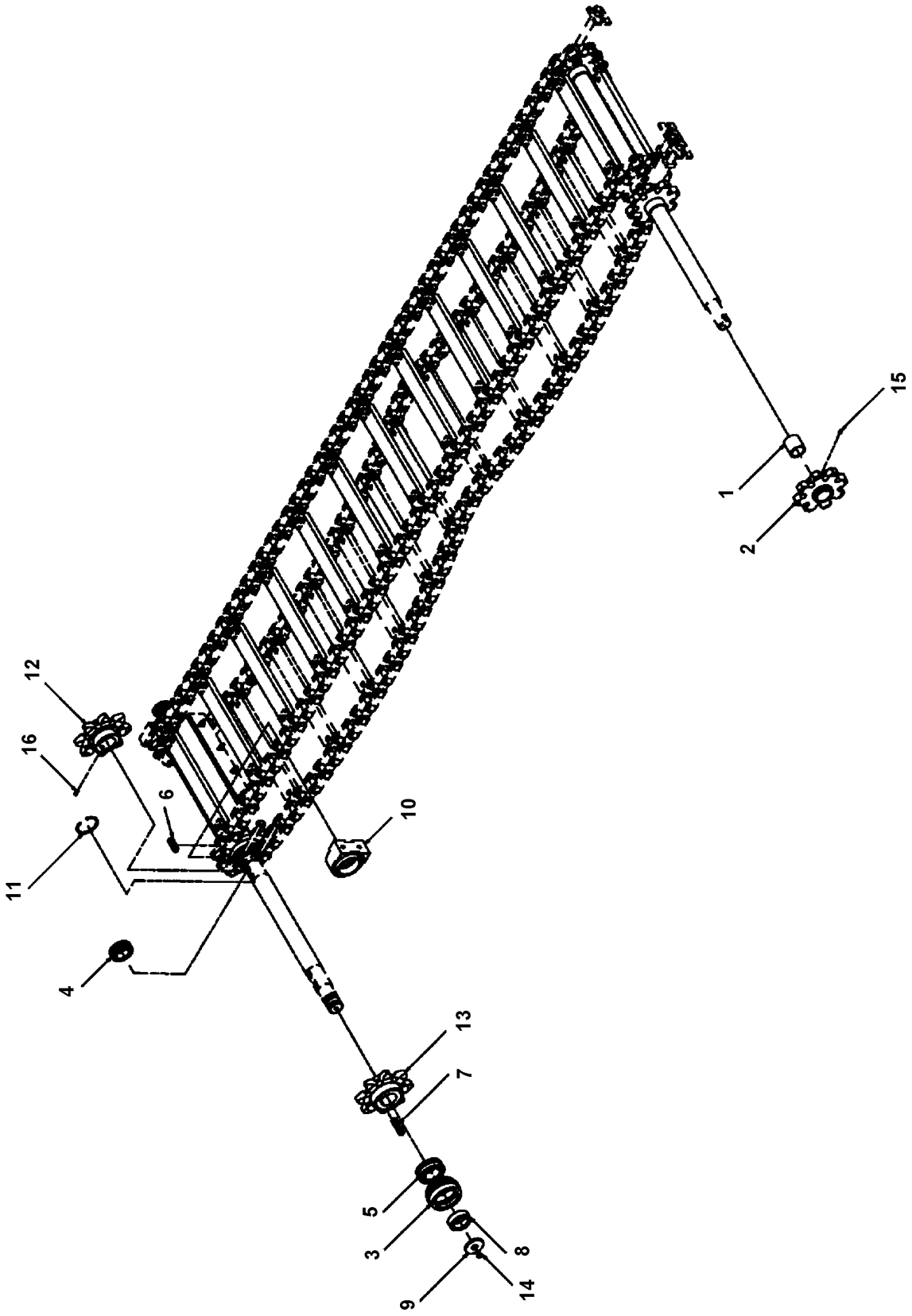

Item	Part No.	Name	Qty	L	SN INFO
1	D717060504	Bearing, shaft	4		
2	4812223916	Assembly, sprocket	4		
3	4812223891	Housing, end bearing	2		
4	D717061003	Bearing, conveyor drive middle	2		
5	D717061004	Bearing, conveyor drive end	2		
6	D717061022	Key, 2.375'	2		
7	D717061023	Key, 3.125'	2		
8	4812223893	Spacer, outer conv sp	2		
9	4812223894	Cap, shaft end	2		
10	4812223895	Housing, bearing	1		
11	4812240170	Circlip	2		
12	4812242654	Weldment, sprocket & hub	2		
13	4812242627	Weldment, sprocket & hub	2		
14	0216110059	Countersunk screw	2		
15	4732512399	Threaded pin	4		
16	4749900615	Threaded pin	4		

Service, repair and wear part kits 4812224504 Screed connecting parts

NO DRAWING AVAILABLE FOR THIS BOM

Item	Part No.	Name	Qty	L	SN INFO
1	4812220098	Screed spacer 1', 13.50'	4		
2	4812220161	Hhcs., 3/4-10 unc - 5.5lg., zi	8		
3	D717800841	Hex. nylon insert lock nut, 3/4	8		
4	D717801072	Hard flat washer, 3/4 - narrow	16		
5	4812222599	Tee., 08mj-08fjs-08mj	1		
6	4812200390	Hose assy	2		
7	4812200388	Hose assy	1		
8	4812222600	Hose assy., f08x084 j45/j--	1		
9	D717920632	F08x054j--/j45	2		
10	4812222601	Hose assy., f08x040 j45/j--	1		
11	4812248132	Adapter	1		
12	4700330383	Cap JIC, steel	4		
13	D717801436	HHCS., 3/4-10 UNC-4LG., ZINC CAEM00162	1		

Service, repair and wear part kits D717954677 Kit, outboard bearing

NO DRAWING AVAILABLE FOR THIS BOM

Item	Part No.	Name	Qty	L	SN INFO
1	D722181611	Stop	4		
2	D932211701	O-ring	4		
3	D935128427	Internal ring	4		
4	D935183934	Bearing	4		
5	0196124700	Threaded pin	8		

Service, repair and wear part kits 4812269064 Kit, conveyor bearing

NO DRAWING AVAILABLE FOR THIS BOM

Item	Part No.	Name	Qty	L	SN INFO
1	D717060504	Bearing, shaft	4		
2	4812223891	Housing, end bearing	2		
3	D717061003	Bearing, conveyor drive middle	2		
4	D717061004	Bearing, conveyor drive end	2		
5	4812240170	Circlip	2		

Service, repair and wear part kits 4812269086 Kit, rear plate, wheel

NO DRAWING AVAILABLE FOR THIS BOM

Item	Part No.	Name	Qty	L	SN INFO
0	4812269086	Kit, rear plate, wheel	1		
1	4812223881	Conveyor drive cover	2		

Service, repair and wear part kits Auger lubrication

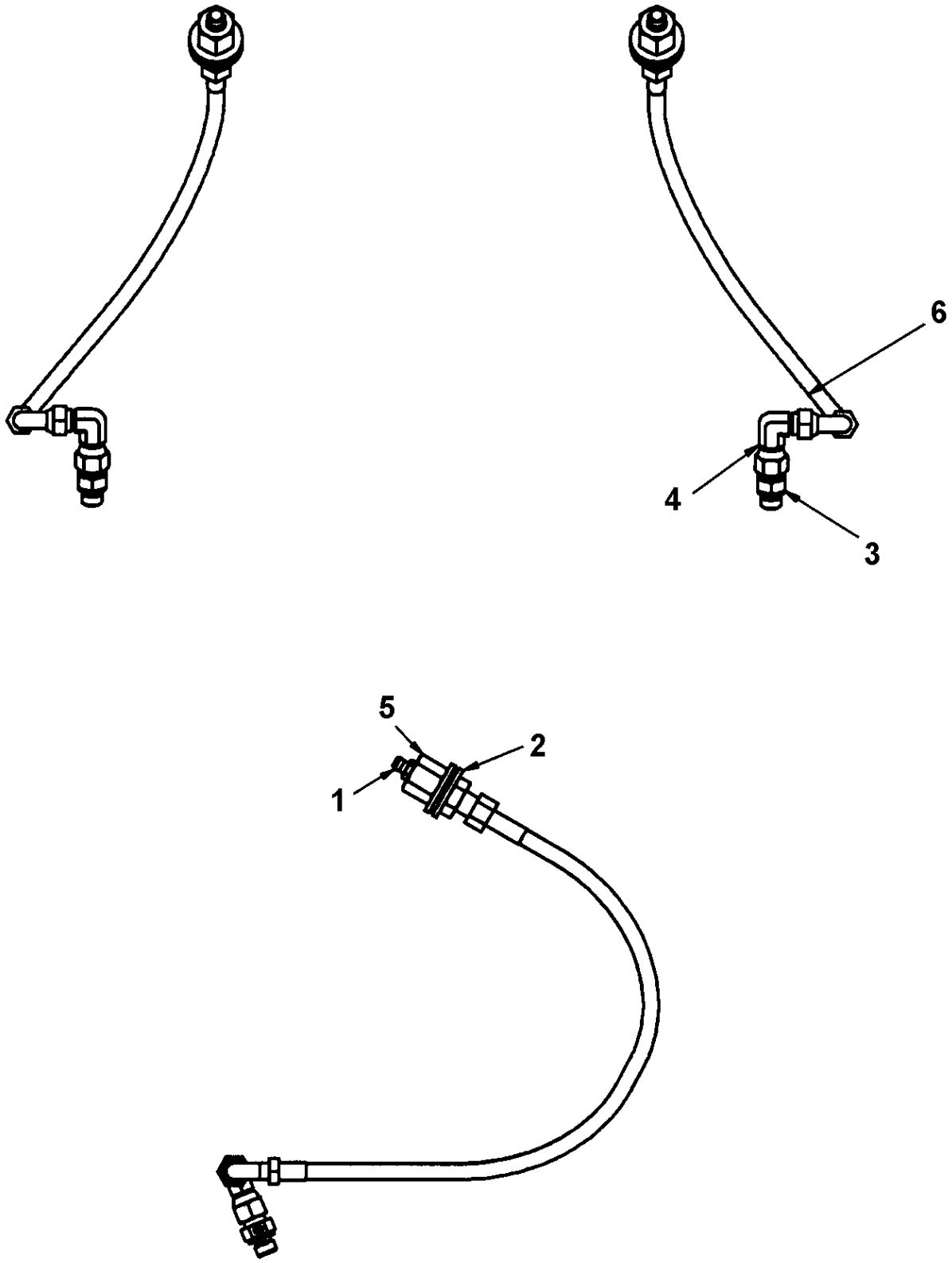

Item	Part No.	Name	Qty	L	SN INFO
1	D717061027	Zerk	2		
2	D717801086	Flat washer, 0.5'	4		
3	4812200224	Adapter, male-male	2		
4	4812200226	Elbow	2		
5	4812200233	Adapter, bulkhead	2		
6	4812200216	Auger grease hose	2		

Service, repair and wear part kits 4812222082 Key

NO DRAWING AVAILABLE FOR THIS BOM

Item	Part No.	Name	Qty	L	SN INFO
1	4700940451	Ignition key	2		
2	4812222078	Door latch key	4		
3	4700358881	Pad lock	2		

Service, repair and wear part kits 4812269105 Kit, Auger reinforcement

NO DRAWING AVAILABLE FOR THIS BOM

Item	Part No.	Name	Qty	L	SN INFO
1	4812245546	Bolt	56		
2	4812245547	Bolt	4		
3	4812244890	Wear segment, RH	30		
4	4812244891	Wear segment, LH	30		
5	0291118549	Hexagon nut	60		
6	4812241337	Wear plate LH	14		
7	4812241339	Wear plate RH	14		

Service, repair and wear part kits D717955090 Uptime kit

NO EXPLODED VIEW
AVAILABLE
FOR THIS BOM

Item	Part No.	Name	Qty	L	SN INFO
1	D717951695	Box	1		
2	4812221070	Coil cable, auger sensor	1		
3	4812220979	Coil cable, conveyor	1		
4	D717101509	Pressure switch	1		
6	D717101013	Relay starter solenoid	1		
7	D717951247	Coil	1		
8	D717103022	Toggle switch, 3	3		
9	D717104006	Relay latch	1		
10	D717103021	Toggle switch, 1	3		
11	D717103010	Push button, parking brake	1		
12	D717103003	Toggle switch, 7	3		
13	D717103018	Toggle switch, 3	3		
14	D717103001	Push button e-stop	1		
15	D717104005	Relay, 24V	1		
16	D717103011	Push button, horn	1		
17	D717103016	NO contact	1		
18	D717103015	NC contact, block	1		
19	D717103017	Maintained action block	1		
20	D717104041	Relay, 24V	1		
21	D717101024	Fuse, 3A	5		
22	D717101025	Fuse, 5A	5		
23	D717101026	Fuse, 10A	5		
24	D717101027	Fuse, 15A	5		
25	D717101045	Fuse, 30A	1		
26	D717101047	Fuse, 50A	2		
27	D717101046	Fuse, 100A	2		
28	D717101048	Fuse, 125A	2		

Service, repair and wear part kits 4812313163 Bogie wheel kit

NO EXPLODED VIEW
AVAILABLE
FOR THIS BOM

Item	Part No.	Name	Qty	L	SN INFO
1	4812242551	Drive wheel, LH	2		
2	4812242562	Drive wheel, RH	2		
3	4812242548	Idler wheel	4		
4	4812242545	Bogie wheel	24		

Service, repair and wear part kits 4812313162 Service cable tool

NO EXPLODED VIEW
AVAILABLE
FOR THIS BOM

Item	Part No.	Name	Qty	L	SN INFO
0	4812313162	Service cable tool	1		
1	D717951884	Harness	1		
2	4700792584	SERVICE CABLE	1		

Frame assembly, 10' crawler paver Frame assembly, 10' crawler paver

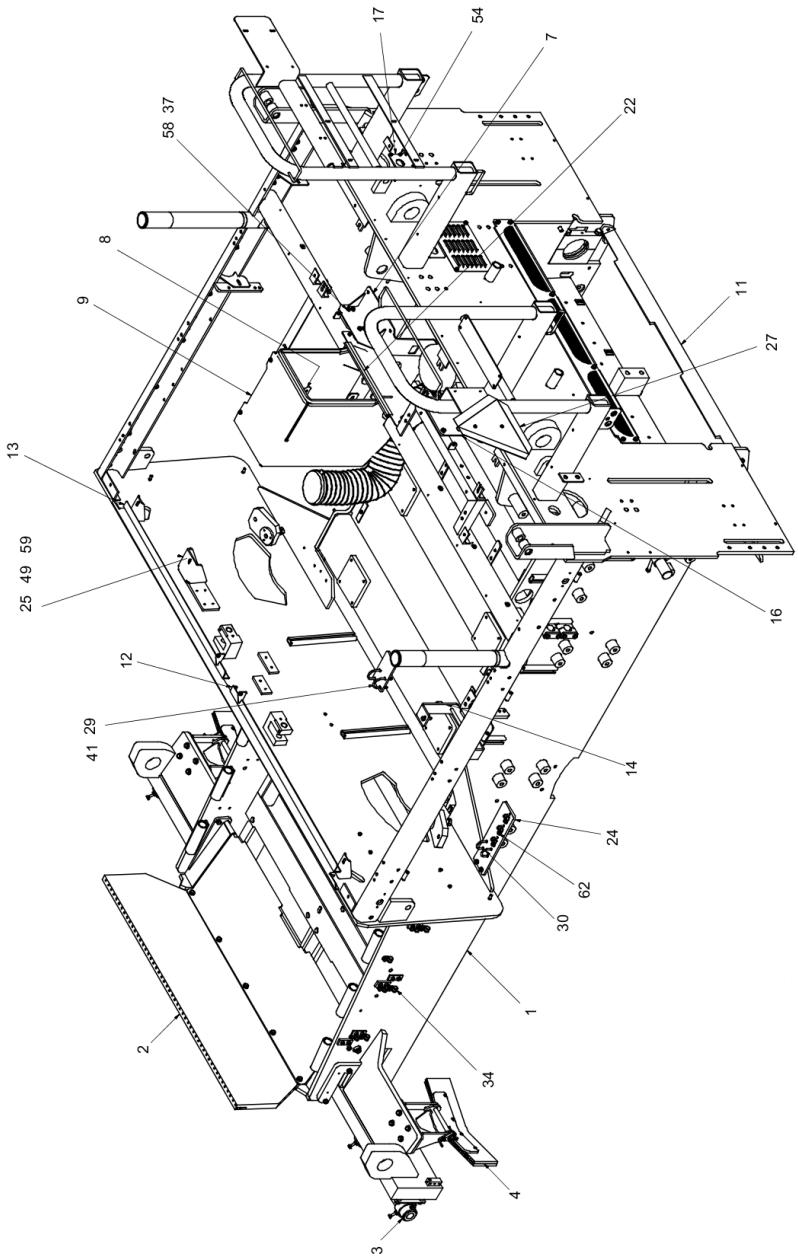

Item	Part No.	Name	Qty	L	SN INFO
1	4812222830	Main frame, weldment	1		
2		Front conveyor cover, assembly	1		
3		Guide pole, assembly	1		
4		Adjustable scraper, assembly	1		
5		Fume extractor, assembly	1		
6	4812223631	Fume screen, weldment	1		
7	4812223632	Bracket, AC box / hand pump	1		
8	4812223633	Air filter bracket	1		
9	4812223634	Cover, air filter, assembly	1		
10	4812223651	Splash guard side plate	2		
11	4812223635	Conveyor guard	1		
12	4812223645	Latch, LH	1		
13	4812223650	latch, RH	1		
14	4812223646	Hose tray	1		
15	4812223647	Scraper	2		
16	4812223643	Bracket, vibe valve	1		
17	4812223640	Plate, bulk head mounting	1		
18	4812223636	Cover, Inspection	2		
19	4812223639	Cover, upper inspection	2		
20	4812223655	Plate, cover	1		
21	4812223649	Cross tube, sealing plate	1		
22	4812222081	Sealing plate beading	1		
23	4812223641	Cover, generator access hole	1		
24	4812223642	Ball valve	1		
25	4812223653	Bracket, cooler top support	1		
26	4812223644	Plate, hopper stop	2		
27	D717113043	Placard, slow moving	1		
28	4812223638	Shaft, screed bar, support	2		
29	4812221881	U bolt	2		
30	D717083019	U-bolt	2		
34	4700921104	Pipe clamp	17		
35	0301233500	Plain washer(A) 8.4 x 16 x 1.6	4		
36	4749901794	Screw	2		
37	0147132603	Screw DIN933	8		
38	0216195761	Hex. Sock screw, M8x25, 8.8	16		
39	0301235800	Plain washer(A) 13 x 24 x 2.5	8		
40	0147141503	Hexagon bolt	2		

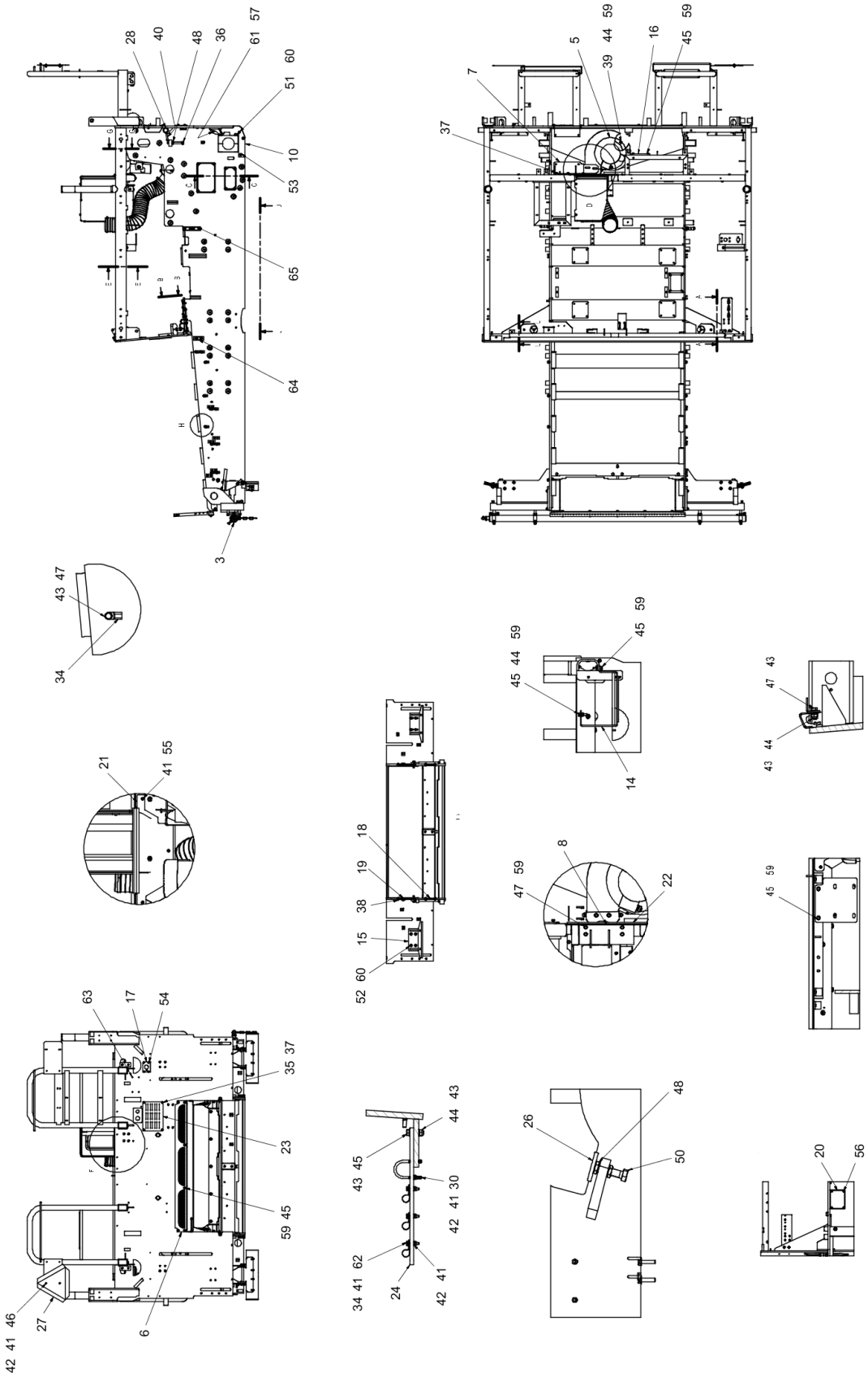
28 40 48 36 61 57 60 51 10 53 65 64 3
7 37 5 39 44 59 16 45 59
43 47 34
21 41 55
18 19 38 15 60 52
45 59 45 44 14
8 47 59 22
43 47 44 43
45 59
63 17 54 35 37 23 59 45 46 27 42 41 6
43 45 44 43 41 30 42 62 34 41 24 42 41
26 48 50
20 56

Item	Part No.	Name	Qty	L	SN INFO
41	0301232100	Washer DIN125	25		
42	0291112854	Hexagon nut	13		
43	0301234400	Washer plain	26		
44	0291118549	Hexagon nut	15		
45	0147196264	Hex. head screw	12		
46	D717801443	Screw, 1/4'	2		
47	0147136203	Hex. head screw M10 x 25	22		
48	0261109911	Hexagon nut	6		
49	0147136003	Hexagon bolt	4		
50	D938150986	Hex. screw	2		
51	0147140203	Hex head screw M12 x 35	4		
52	0147140103	Hex head screw M12 x 30	8		
53	0147143803	Hexagon head screw	2		
54	0147125112	Hex. head screw	4		
55	0147124703	Screw M6 x 20	3		
56	0216195783	Countersunk screw	4		
57	5730015260	Hexagon head screw	2		
58	D939776113	Washer	4		
59	4749901807	Washer	27		
60	4749901808	Washer	12		
61	4812223878	Washer	4		
62	5730015168	Hexagon head screw	3		
63	4700791709	Blind rivet	4		
64	4812247915	Hose clip, track tensioning	2		
65	4812247929	Hose clip, propel motor	4		

Frame assembly, 10' crawler paver Front conveyor cover, assembly

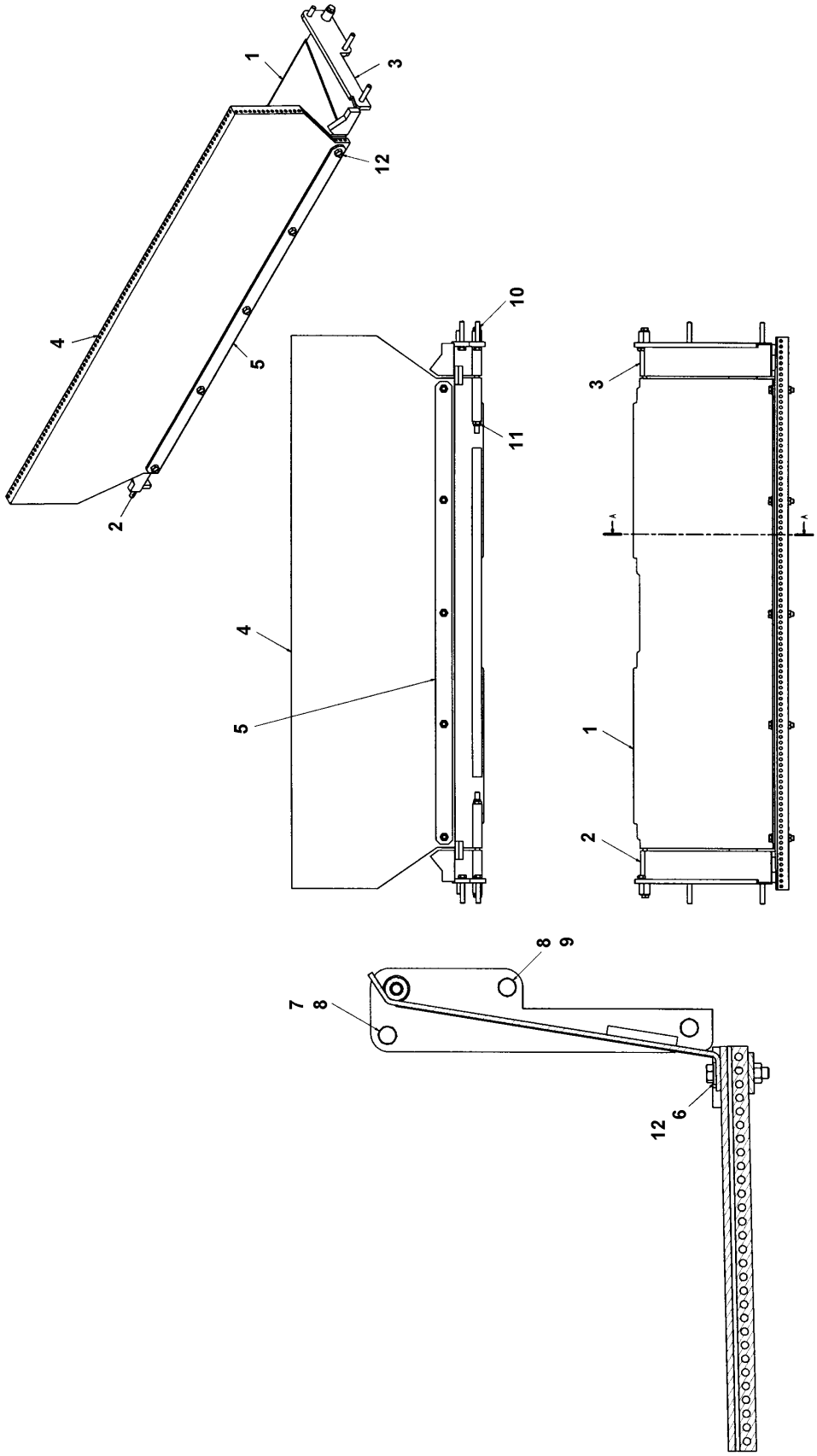

Item	Part No.	Name	Qty	L	SN INFO
1	4812223657	Front conveyor cover	1		
2	4812223658	Conveyor cover mount	1		
3	4812223659	Conveyor cover mount	1		
4	4812223788	Skirt, hopper front	1		
5	4812223660	Front handle support	1		
6	0301235800	Plain washer(A) 13 x 24 x 2.5	7		
7	5530999900	Hexagon head screw	2		
8	4749901808	Washer	6		
9	D938150770	Hex. screw	4		
10	4812223668	Bolt	2		
11	5730008013	Hexagon nut	2		
12	0147140705	Hexagon head screw	5		

Frame assembly, 10' crawler paver Guide pole, assembly

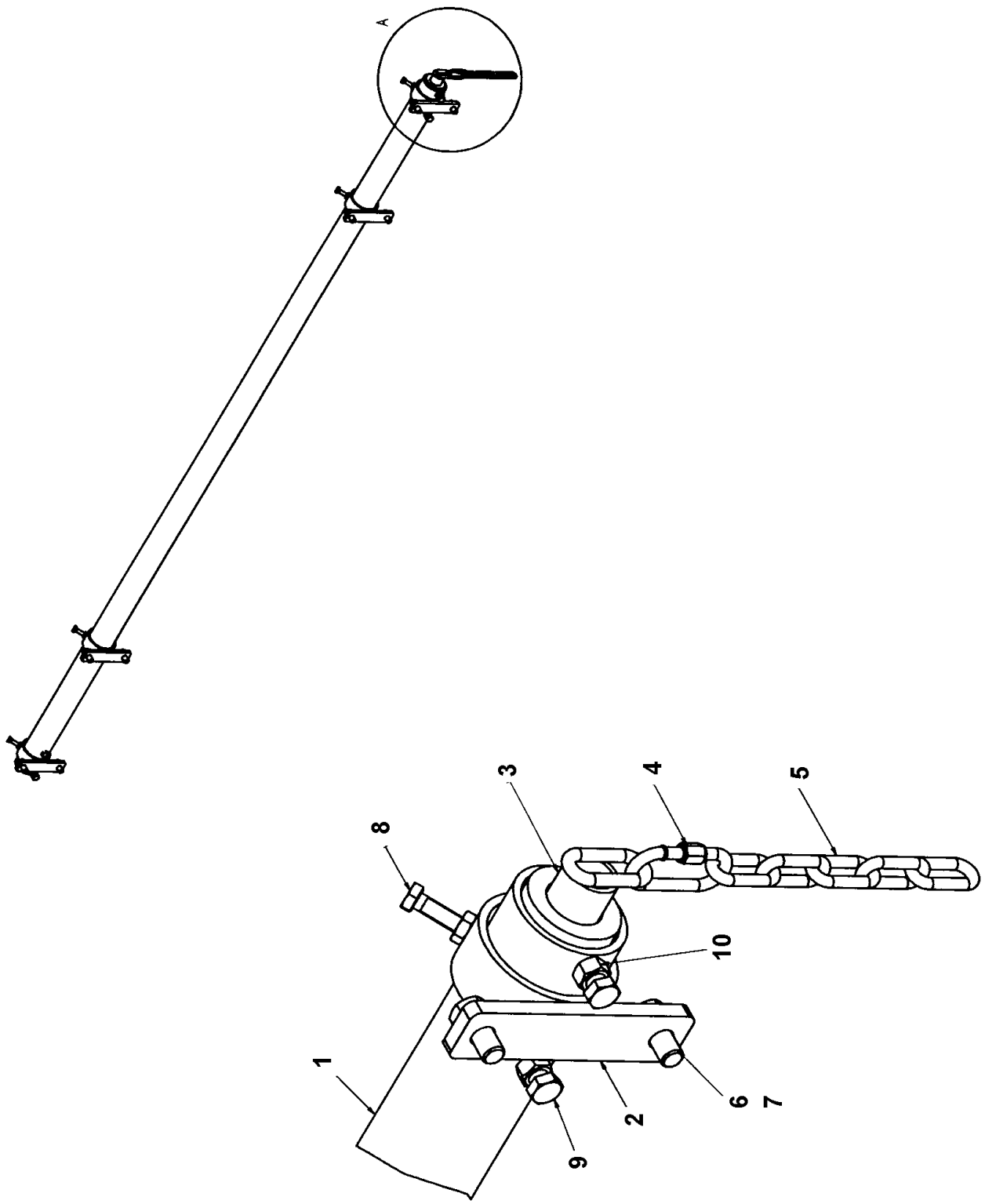

Item	Part No.	Name	Qty	L	SN INFO
1	4812223674	Paving guide pole	1		
2	4812223675	Guide pole support	4		
3	4812223676	Pole, steering guide inner	1		
4	4812223255	Chain connecting link	1		
5	D717011523	Chain, guide pole	1		
6	0147143803	Hexagon head screw	8		
7	4812223878	Washer	8		
8	0147136403	Hex. head screw	4		
9	0147140203	Hex head screw M12 x 35	4		
10	0266211200	Hexagon nut M12	4		

Frame assembly, 10' crawler paver Adjustable scraper, assembly

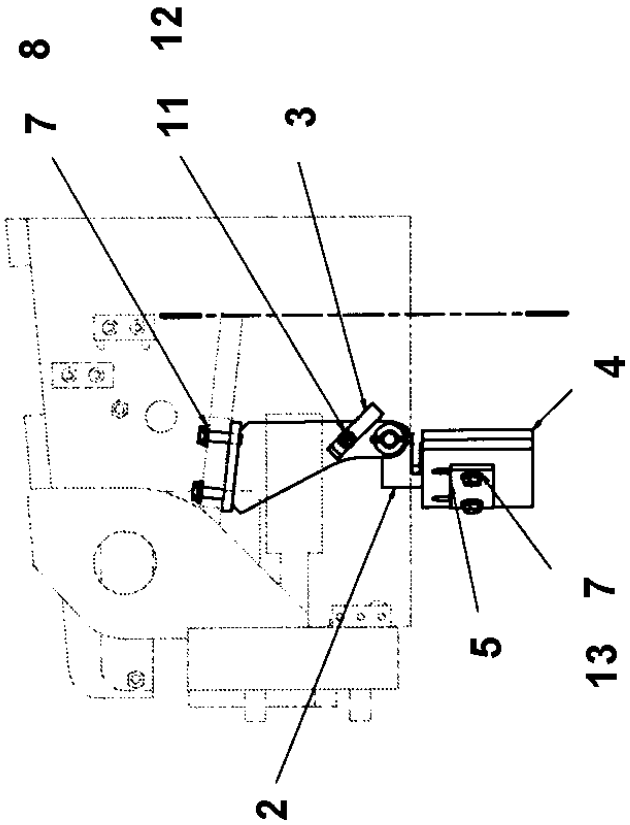

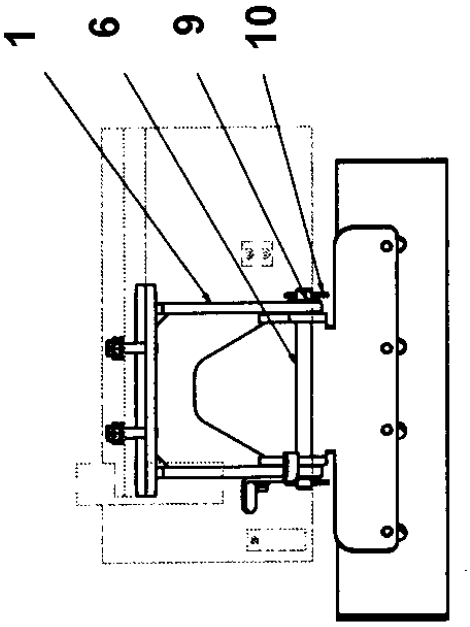

Item	Part No.	Name	Qty	L	SN INFO
1	4812223715	Weldment, scraper bracket	2		
2	4812223719	Plate, rubber holding	2		
3	4812223720	Plate, lock	2		
4	4812223721	Pad, wear	4		
5	4812223722	Plate, elastomer mount	4		
6	4812223723	Pin, mounting	2		
7	D939776117	Flat washer	16		
8	5530999900	Hexagon head screw	8		
9	0300027413	Washer	4		
10	4812045879	Splint	4		
11	0301234400	Washer plain	2		
12	4812223656	Hexagon socket head shoulder screws	2		
13	0147196101	Hex. head screw	8		

Frame assembly, 10' crawler paver Fume extractor, assembly

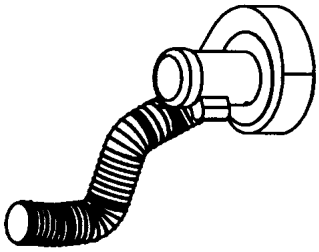

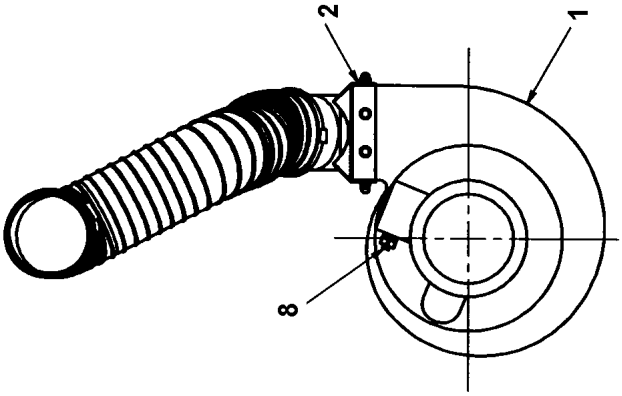

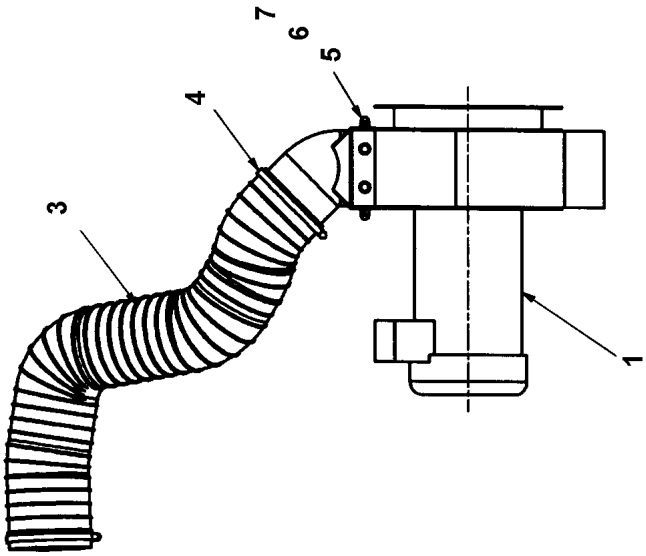

Item	Part No.	Name	Qty	L	SN INFO
1	D717012501	Blower fume extractor	1		
2	4812223669	Transition, fume extractor	1		
3	4812220754	Duct	1		
4	D717091021	Clamp, hose	2		
5	0215001085	Hexagon socket button head screw	8		
6	0301234400	Washer plain	16		
7	0277131100	Hexagon domed cap nut	8		
8	D717104516	Fitting straight, 1/2'	1		

Frame assembly, 10' crawler paver D717012501 Blower, Fume extractor

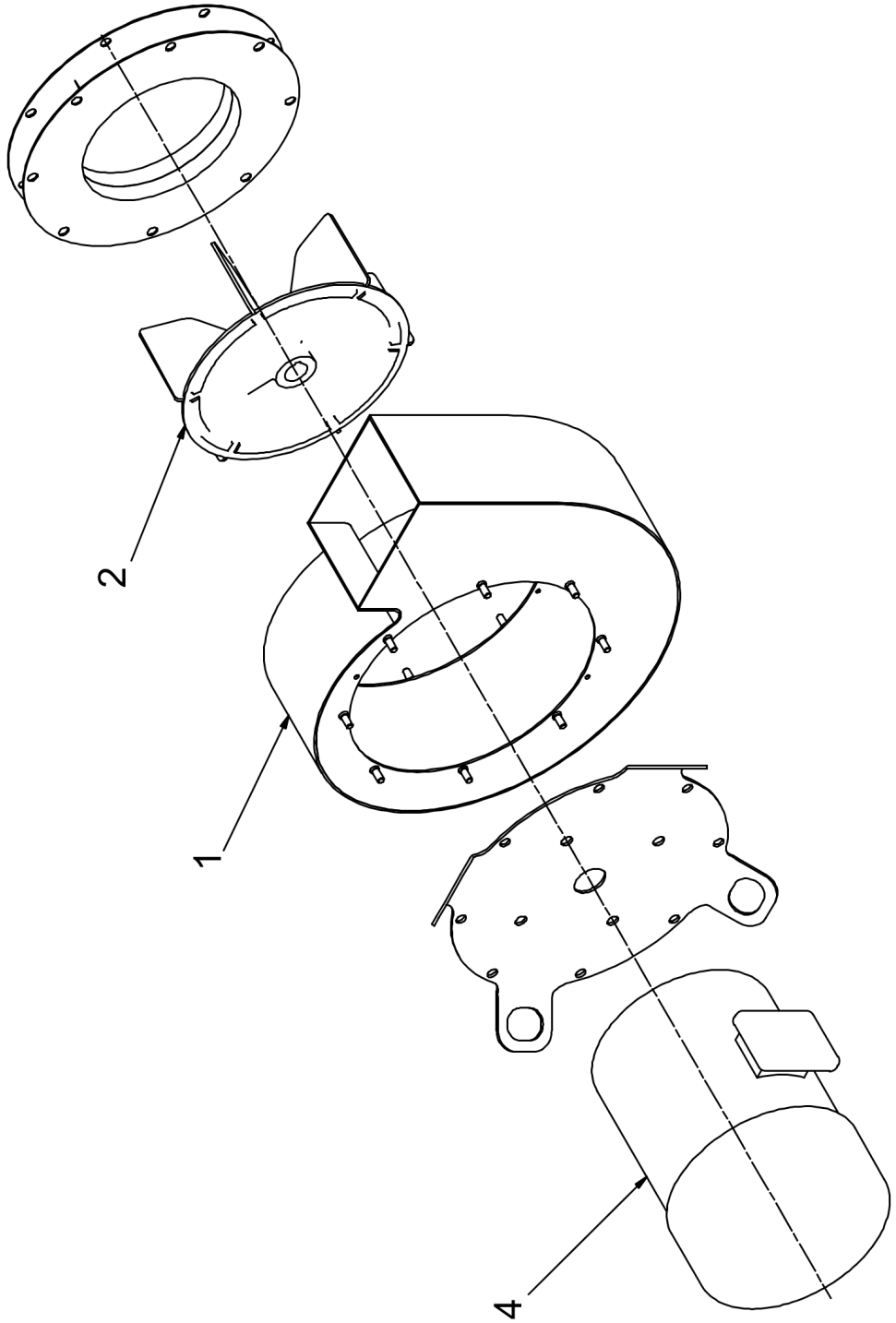

Item	Part No.	Name	Qty	L	SN INFO
1	4812313168	Housing	1		
2	4812313169	Machined aluminum wheel	1		
4	4812313170	Motor	1		

Frame assembly, 10' crawler paver 4812222081 Beading, sealing plate

NO DRAWING
AVAILABLE
FOR THIS BOM

Item	Part No.	Name	Qty	L	SN INFO
1	4812200193	Edge trim	1		

Frame assembly, 10' crawler paver 4812223634 Cover, air filter, assembly

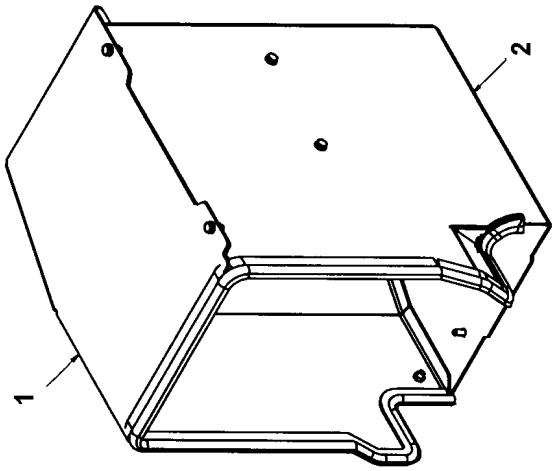

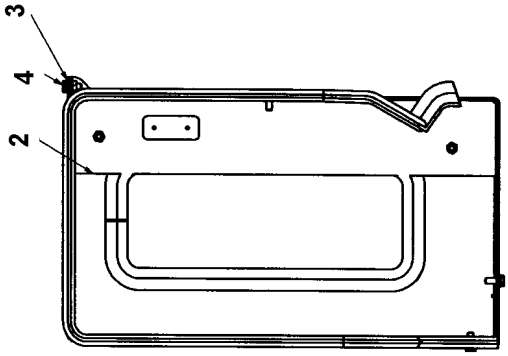

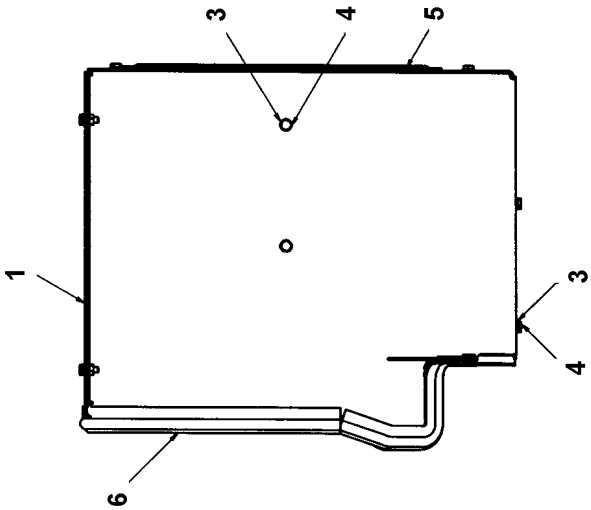

Item	Part No.	Name	Qty	L	SN INFO
1		Air intake mount	1		
2		Air intake cover	1		
3		Plain washer(A) 8.4 x 16 x 1.6	9		
4		Hex head screw M8 x 20	9		
5		Air filter rear cover beading	1		
01	4812200193	Edge trim	1		
6		Air filter front cover beading	1		
01	4812200193	Edge trim	1		

Screed arm, assembly Screed arm, assembly

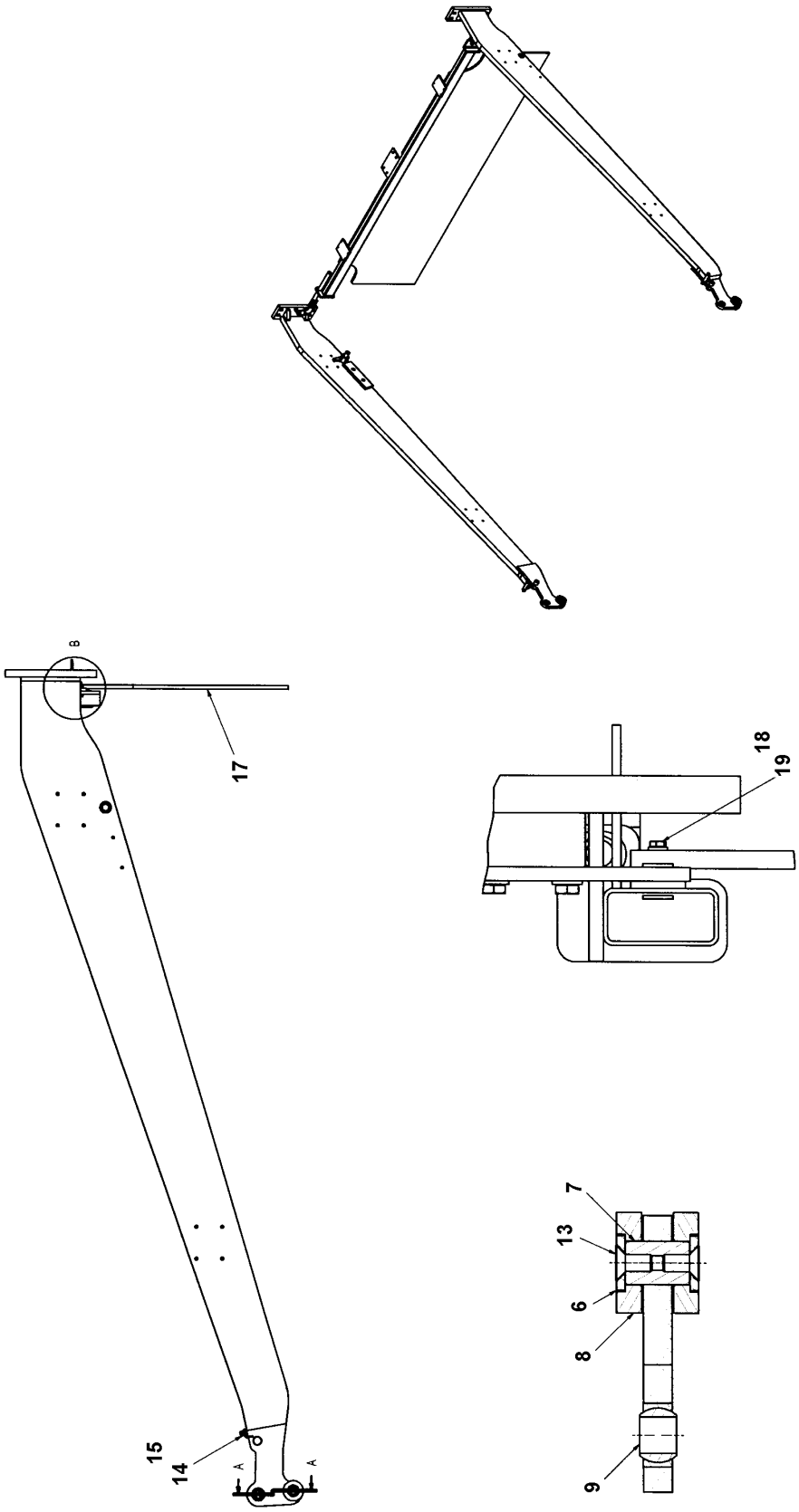

Item	Part No.	Name	Qty	L	SN INFO
1	4812223513	Screed arm weldment, left side	1		
2	4812223515	Screed arm weldment, right side	1		
3	4812223514	Plate, slider	2		
4	4812223517	Pin, screed cylinder pivot	2		
5	5730015470	Countersunk screw	4		
6	4812223120	Washer	4		
7	4812224147	Spacer, roller	2		
8	4812224146	Roller, screed arm	4		
9	D717040509	Ball bearing	2		
10	4812223516	Plate, tow point gage pointer	2		
11	0147110672	Screw DIN933	2		
12	0291111000	Nut DIN985	2		
13	0216110059	Countersunk screw	4		
14	D939776115	Washer	2		
15	0291118549	Hexagon nut	2		
16		Assembly, slope arm	1		
17	4812221580	Rubber pad	1		
18	D939776111	Washer	9		
19	D938155547	Hexagon bolt	9		
20	4812223530	Spacer	2		

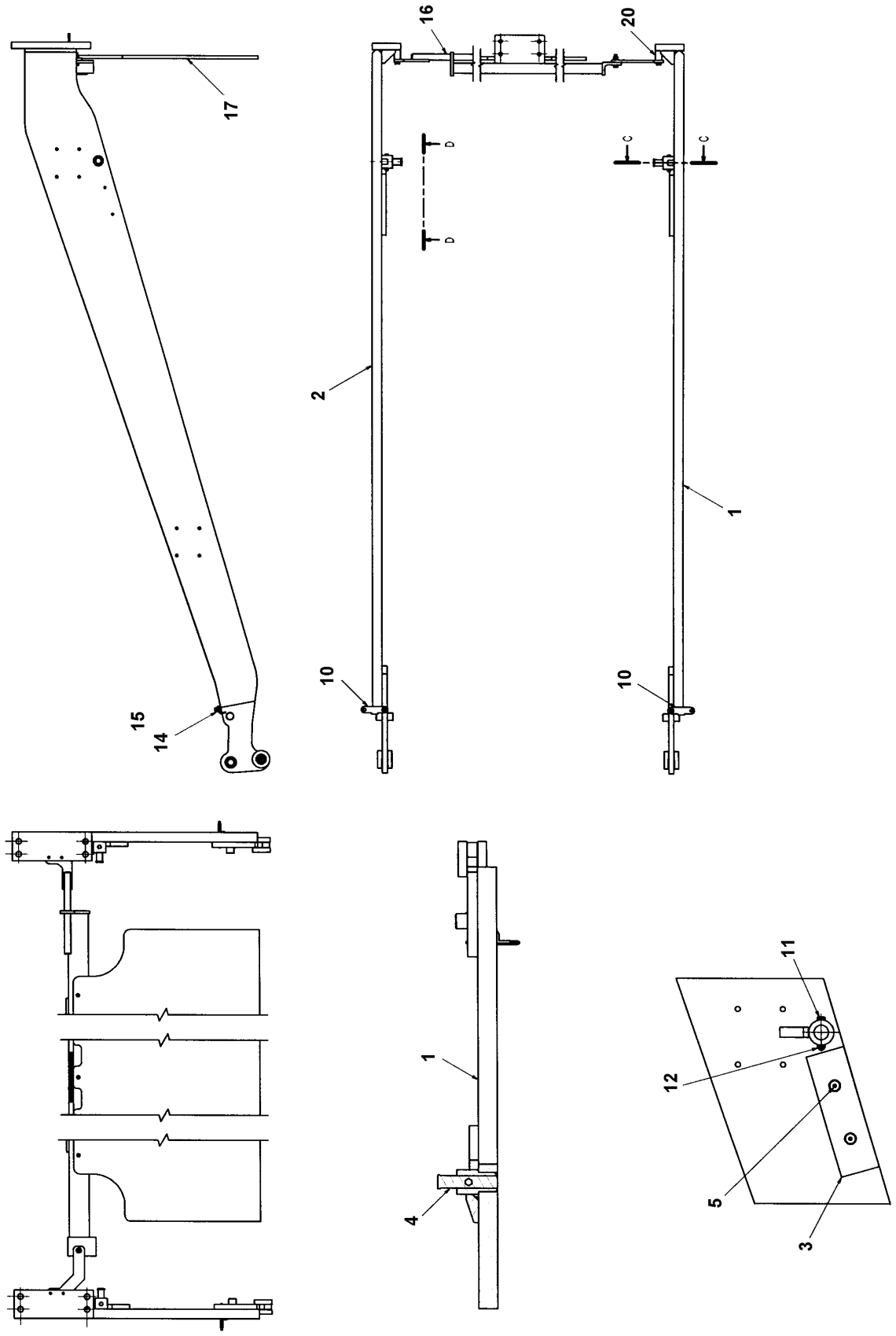
17
15
14
16
20
2
10
10
1
D
D
C
C
1
4
11
12
5
3

This page intentionally left blank

Screed arm, assembly Assembly, slope arm

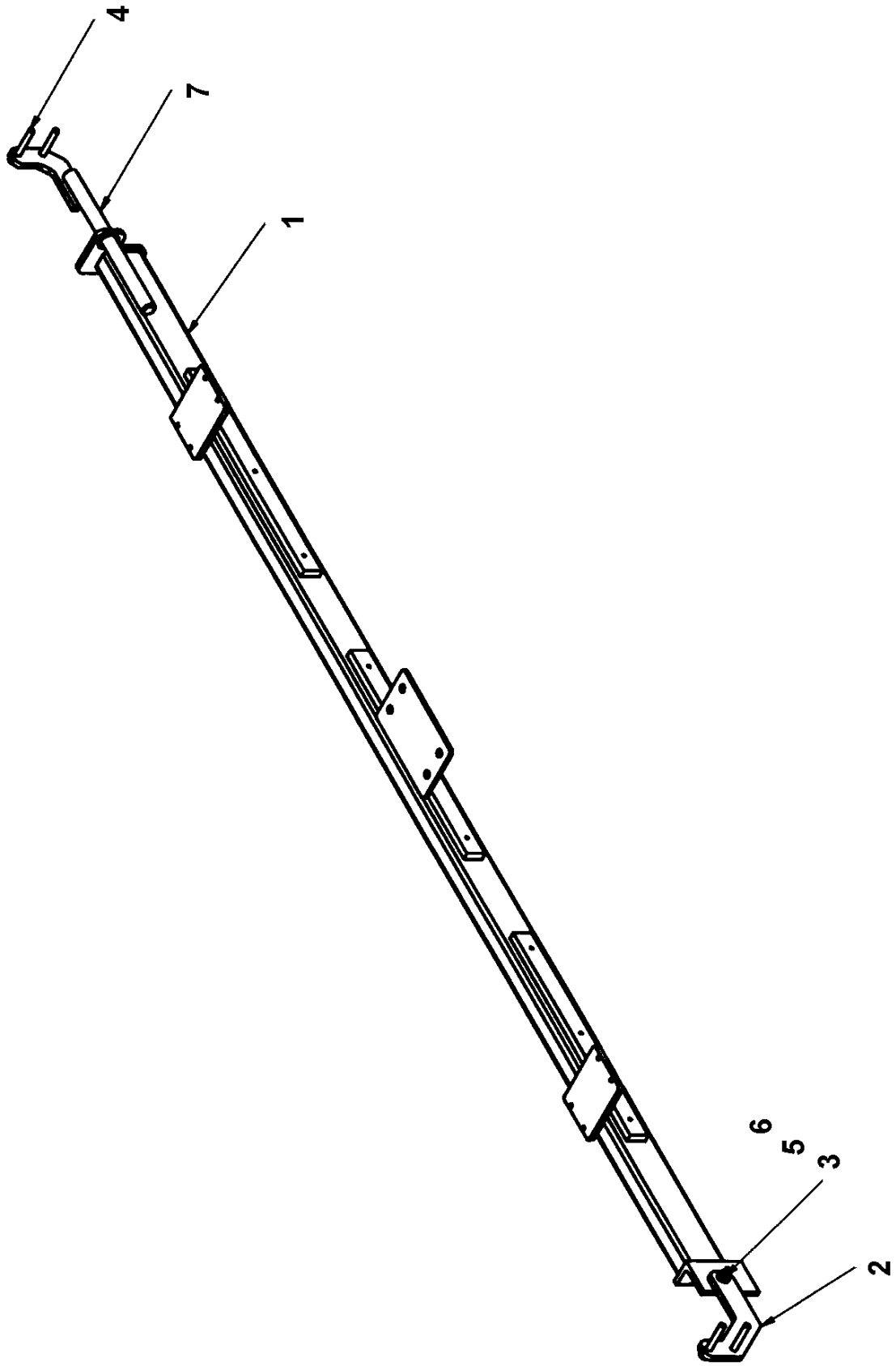

Item	Part No.	Name	Qty	L	SN INFO
1	4812223527	Slope beam	1		
2	4812248595	Mount	1		
3	0291118549	Hexagon nut	1		
4	0147137103	Hex head screw M10x70	4		
5	0147196394	Hexagon head screw	1		
6	D939776115	Washer	6		
7	4812248594	Weldment, slide	1		

Conveyor, assembly Conveyor, assembly

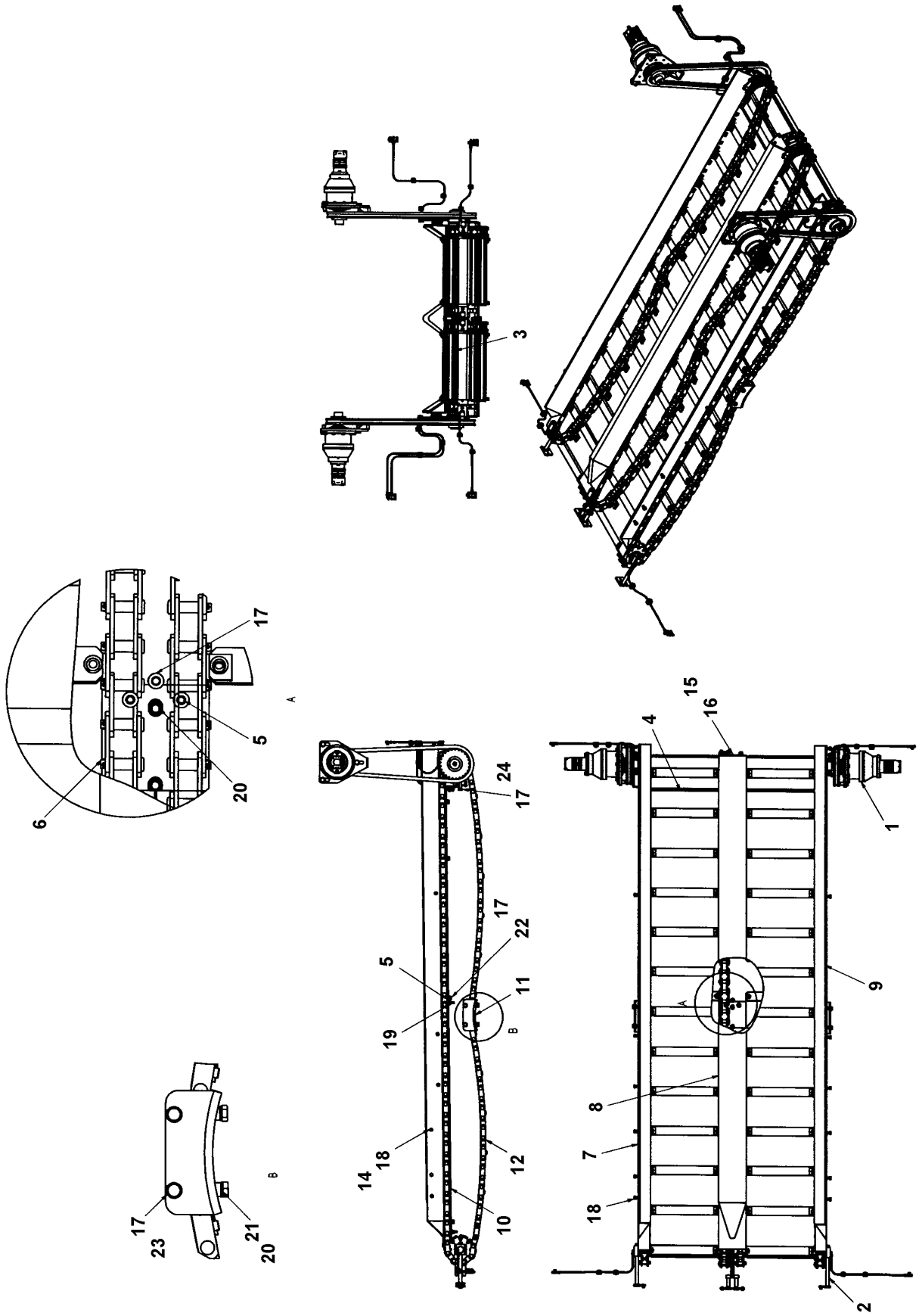

Item	Part No.	Name	Qty	L	SN INFO
1		Assembly, conveyor drive complete	1		
2		Assembly, tensioner	1		
3	4812223909	Floor, front right	1		
4	4812223913	Floor, rear right	1		
5	4812223911	Floor, rear left	1		
6	4812223501	Middle chain support	1		
7	4812223926	Guide plate, right	1		
8	4812223928	Guide plate, middle	1		
9	4812223921	Guide plate, left	1		
10	4812223907	Floor, front left	1		
11	4812223935	Outer chain support	1		
12	4812223917	Assembly, conveyor chain	2		
13		Conveyor lubrication assembly	2		
14	4812223878	Washer	14		
15	D939776113	Washer	3		
16	0147132303	Hex head screw M8 x 20	3		
17	D939776124	Washer	18		
18	4812223997	Screw	14		
19	5730008013	Hexagon nut	8		
20	4812223998	Screw	2		
21	4812223999	Washer	2		
22	4812224001	Screw	4		
23	5540084600	Hexagon head screw	4		
24	5730082761	Hexagon head screw	2		

Assembly, conveyor drive complete Assembly, conveyor drive complete

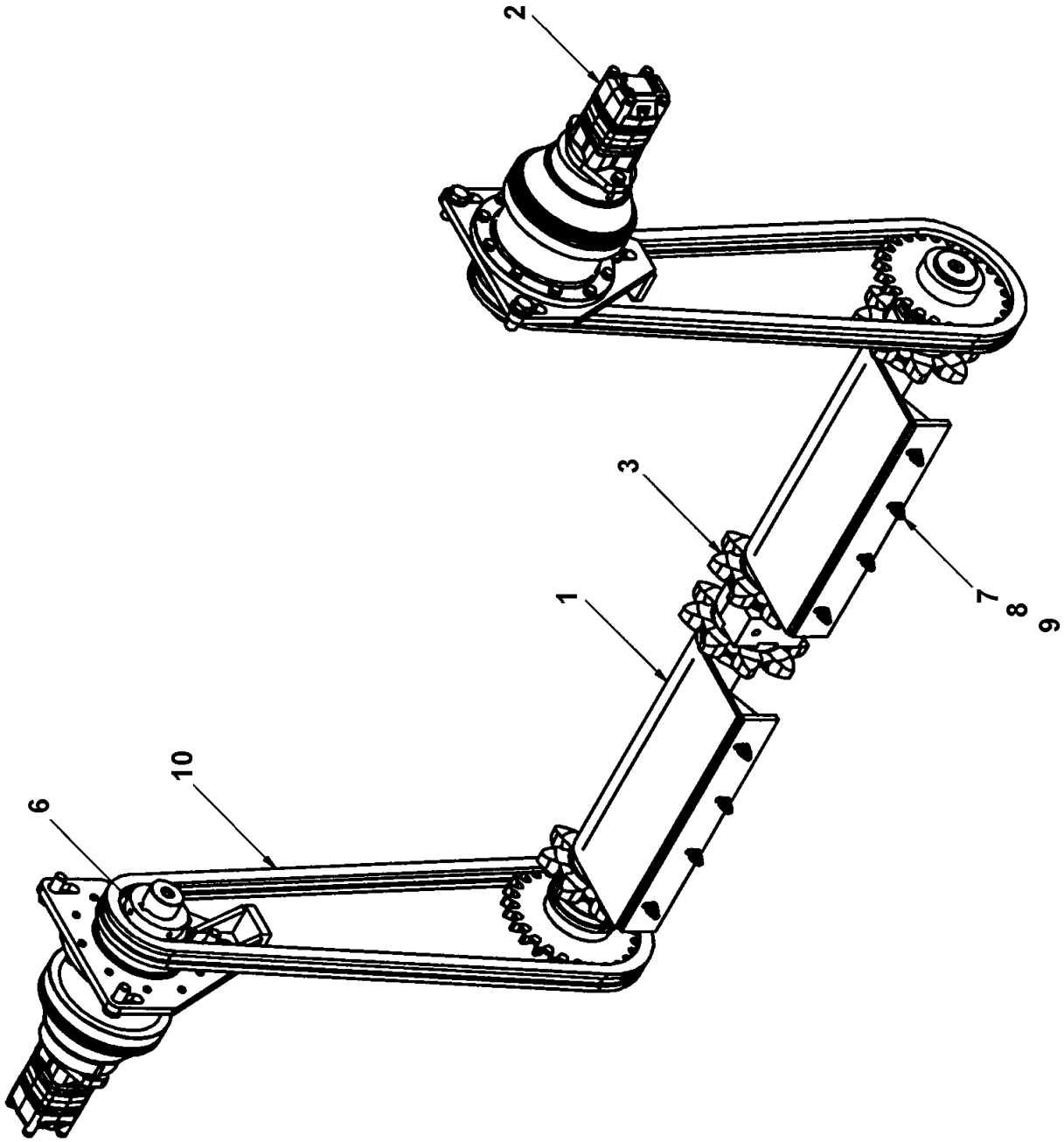

Item	Part No.	Name	Qty	L	SN INFO
1	4812223881	Conveyor drive cover	2		
2		Motor and gear box	2		
3		Drive, conveyor	1		
6	D717061001	Sprocket, no.100	2		
7	0291118549	Hexagon nut	8		
8	4812223879	Narrow washer	8		
9	D939776115	Washer	16		
10	4812222240	Roller chain	2		

Assembly, conveyor drive complete Assembly, Motor and gear box

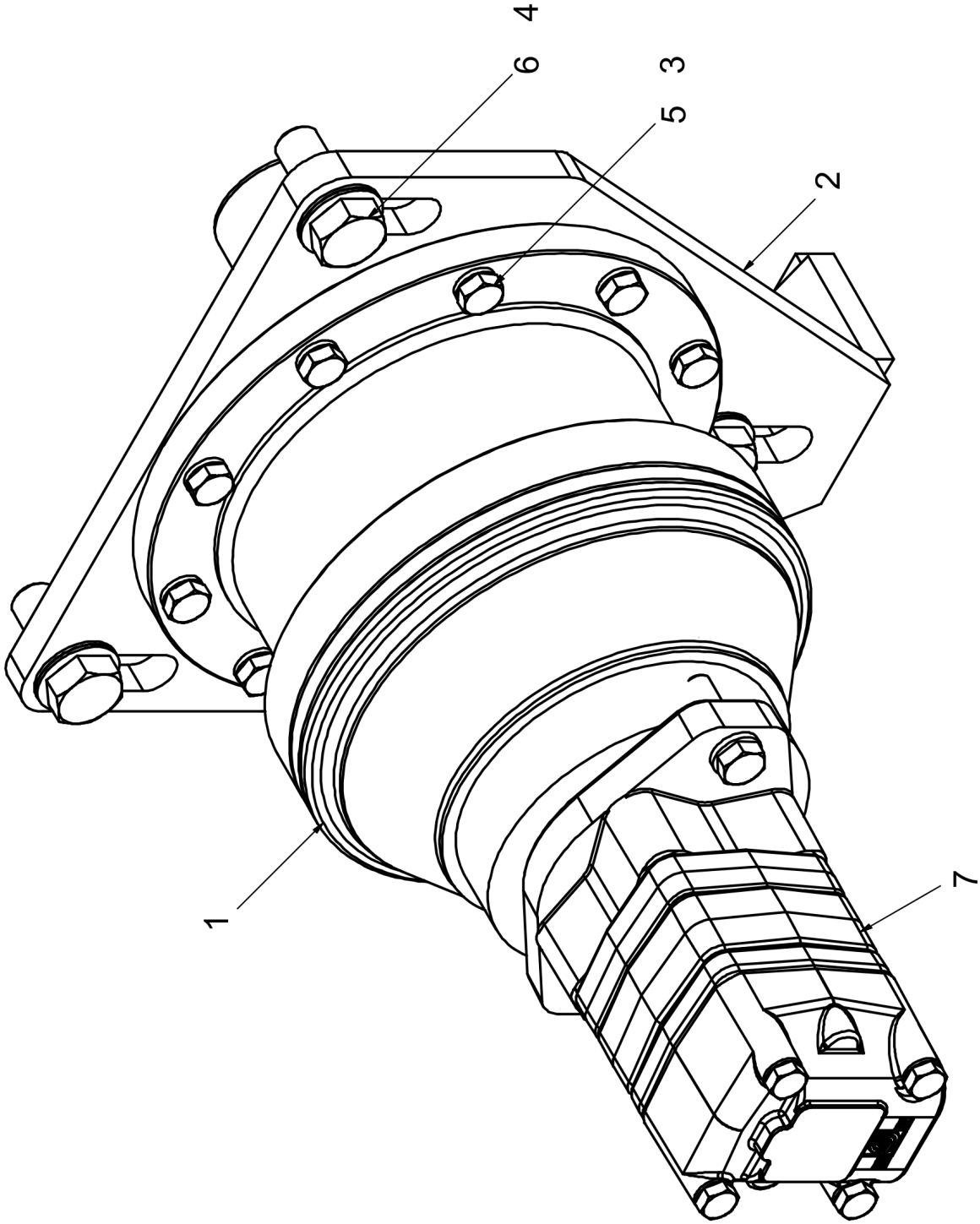

Item	Part No.	Name	Qty	L	SN INFO
1	D717061012	Gearbox	1		
2	4812223886	Mount	1		
3	4749901808	Washer	10		
4	D939776129	Locking washer	3		
5	4812223914	Hexagon screw	10		
6	D938116929	Hex. screw	3		
7	D717061035	Motor	1		

Assembly, conveyor drive complete Assembly, Drive, conveyor

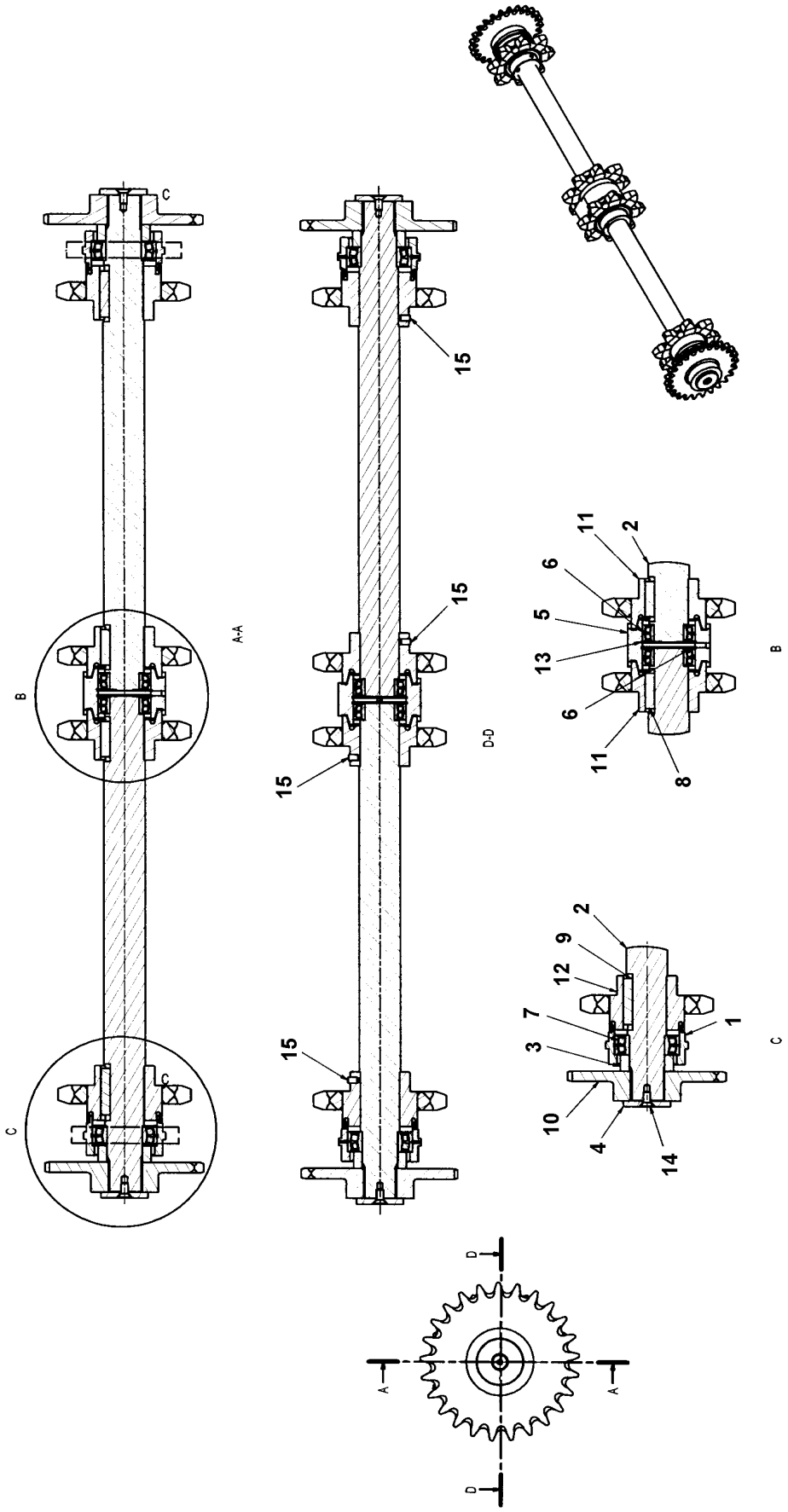

Item	Part No.	Name	Qty	L	SN INFO
1	4812223891	Housing, end bearing	2		
2	4812223892	Drive shaft	2		
3	4812223893	Spacer, outer conv sp	2		
4	4812223894	Cap, shaft end	2		
5	4812223895	Housing, bearing	1		
6	D717061003	Bearing, conveyor drive middle	2		
7	D717061004	Bearing, conveyor drive end	2		
8	D717061022	Key, 2.375'	2		
9	D717061023	Key, 3.125'	2		
10	4812242602	Sprocket	2		
11	4812242654	Weldment, sprocket & hub	2		
12	4812242627	Weldment, sprocket & hub	2		
13	4812240170	Circlip	2		
14	0216110059	Countersunk screw	2		
15	4749900615	Threaded pin	4		

Conveyor, assembly Assembly, tension

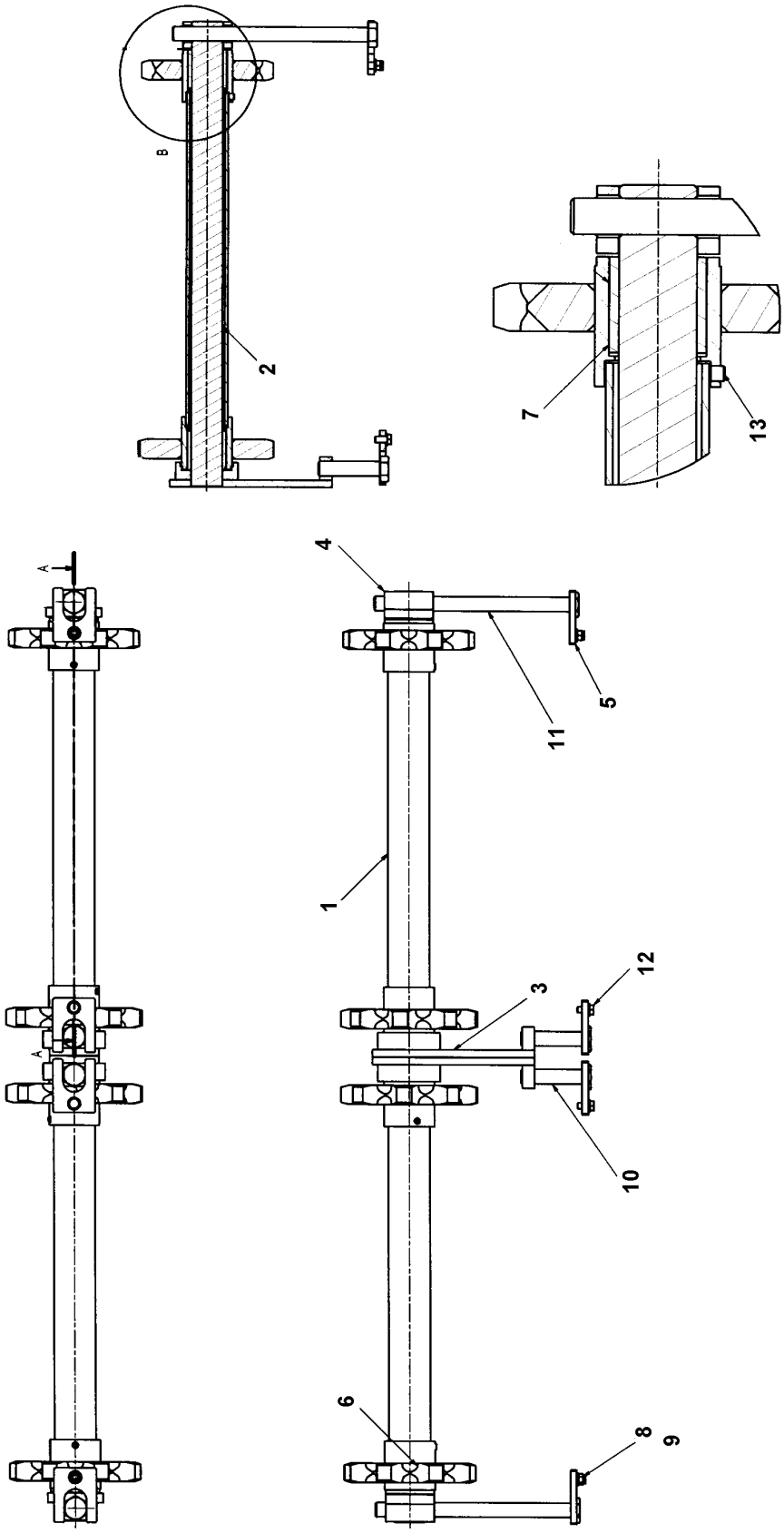

Item	Part No.	Name	Qty	L	SN INFO
1	4812223897	Housing, shaft spacer	2		
2	4812223898	Shaft, conveyor roller	2		
3	4812223899	Inner shaft slide	2		
4	4812223903	Slide, outer shaft	2		
5	4812223906	Tab, adjuster lock	4		
6	4812223916	Assembly, sprocket	4		
7	D717060504	Bearing, shaft	4		
8	0291118549	Hexagon nut	2		
9	D939776115	Washer	4		
10	5730006245	Hexagon head screw	2		
11	4812223904	Hexagon screw	2		
12	0147136003	Hexagon bolt	2		
13	4732512399	Threaded pin	4		

Conveyor, assembly Conveyor lubrication assembly

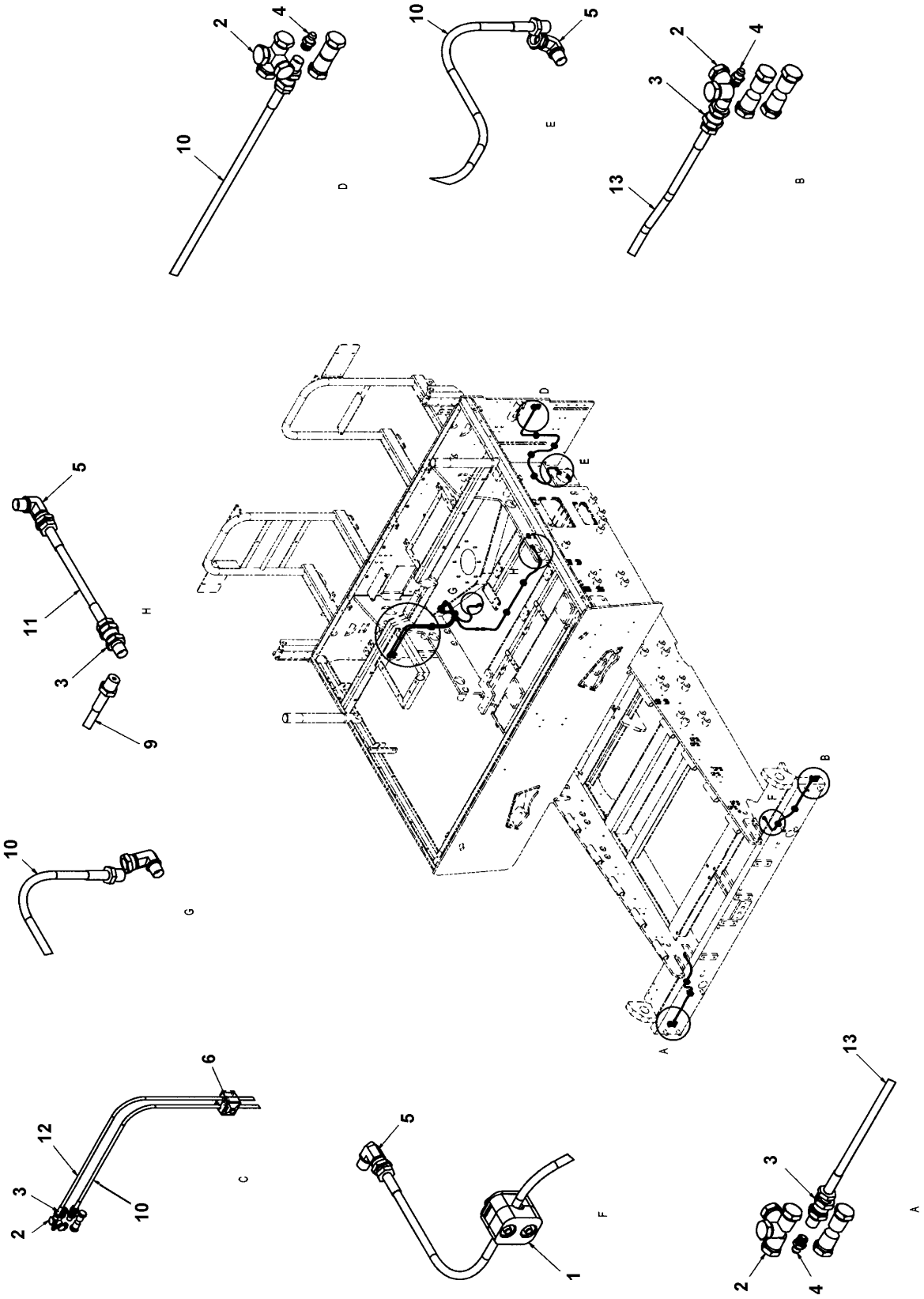

Item	Part No.	Name	Qty	L	SN INFO
1	4812200407	Pipe clamps	10		
2	D717064511	Plug, pipe	22		
3	D717064512	Connector, straight	9		
4	D717061027	Zerk	5		
5	D717064513	Elbow, pipe	5		
6	4812200525	Stauff	4		
9	4812222521	Grease hose	1		
10	4812200455	Grease hose	2		
11	4812222524	Grease hose	1		
12	4812200468	Grease hose	1		
13	4812200454	Grease hose	2		

Hopper, assembly 10FT Hopper, assembly

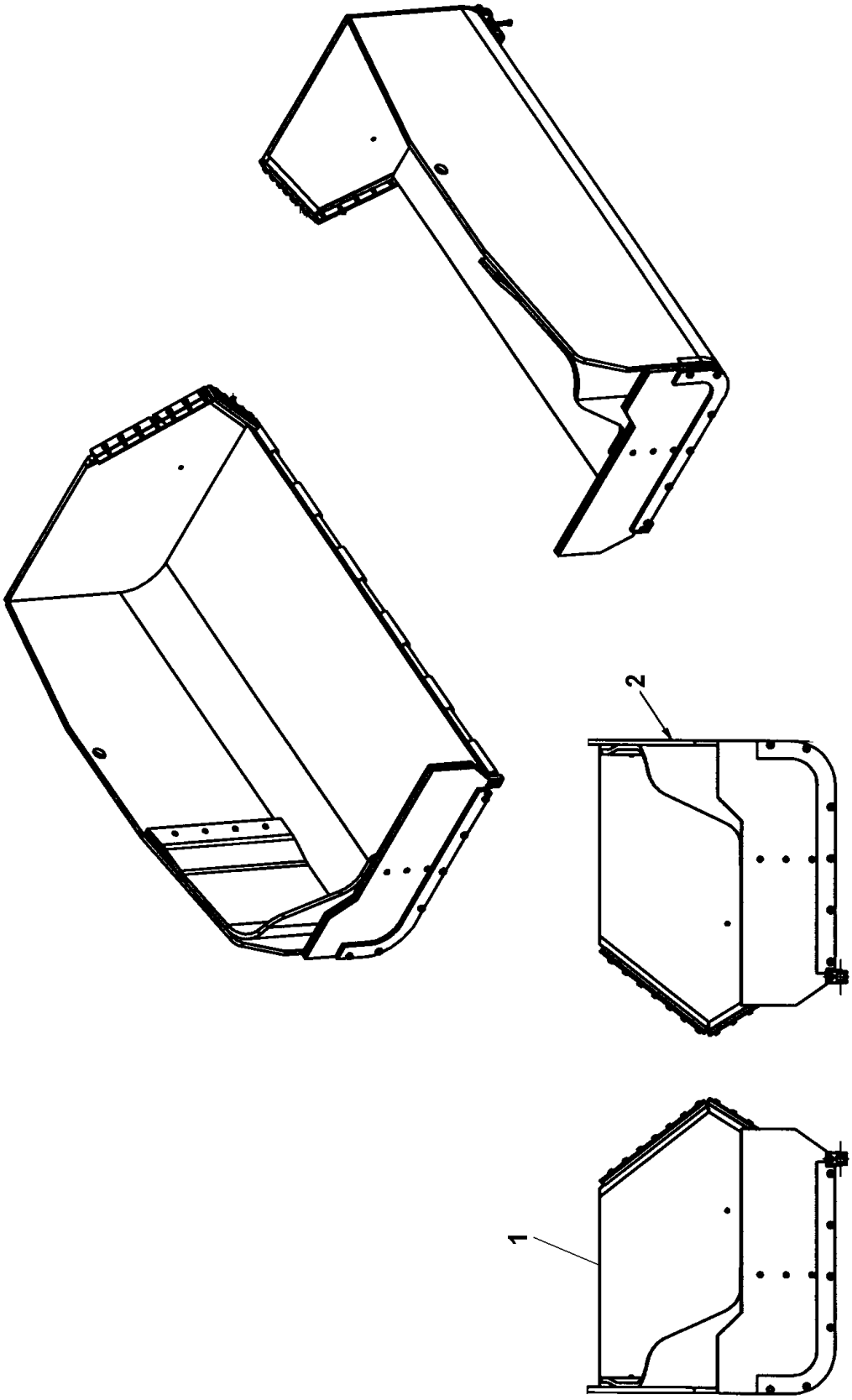

Item	Part No.	Name	Qty	L	SN INFO
1		Hopper assembly, left side	1		
2		Hopper assembly, right side	1		

Hopper, assembly 10FT Hopper assembly, left side

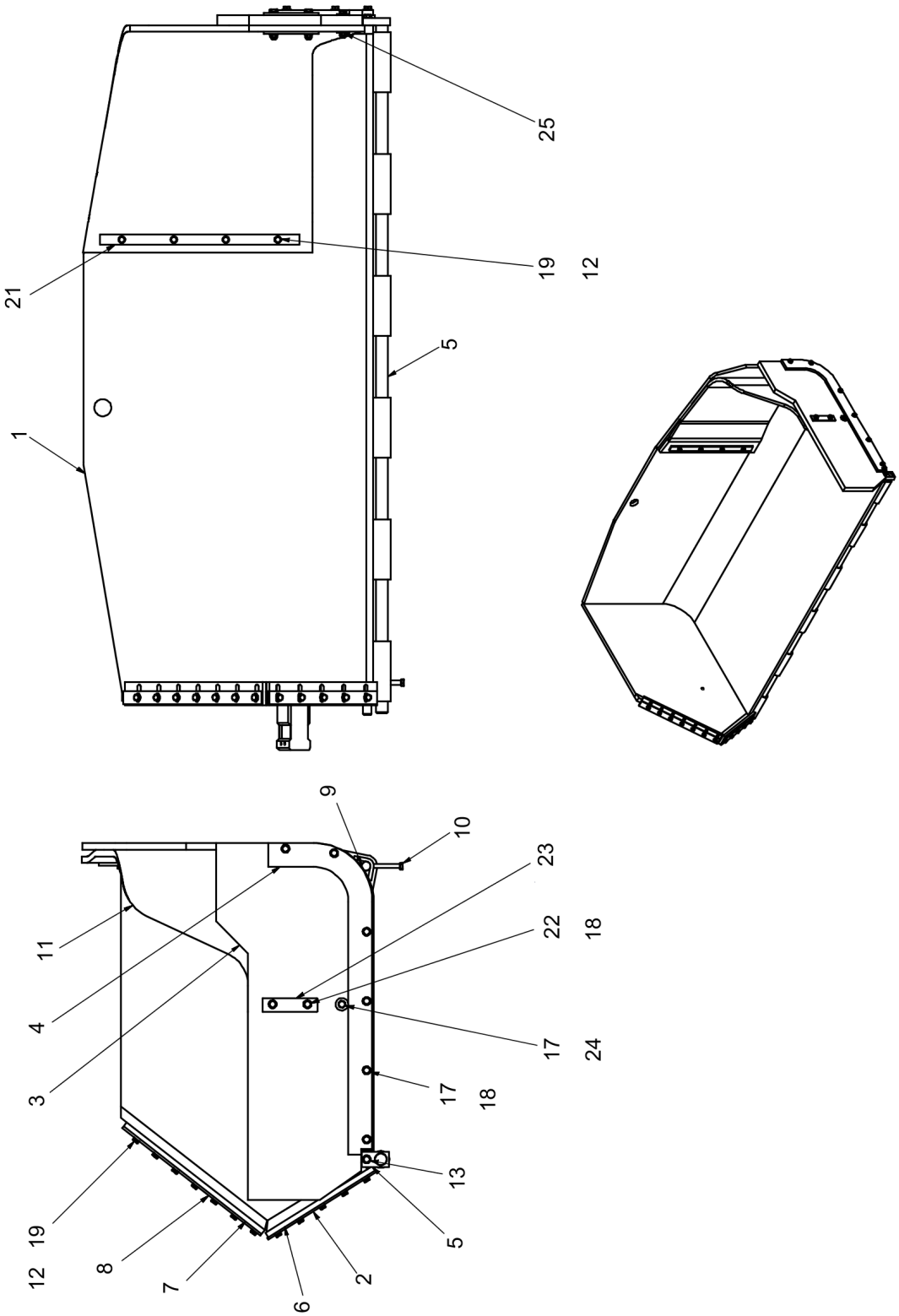

Item	Part No.	Name	Qty	L	SN INFO
1	4812223419	Hopper, left side	1		
2	4812223409	Wiper backing, bottom	1		
3	4812223789	Skirt, hopper sides	1		
4	4812223411	Plate, clamp	1		
5	4812223414	Hopper pivot pin	1		
6	4812223541	Wiper	1		
7	4812223540	Wiper, long	1		
8	4812223410	Wiper backing plate, long	1		
9	4812223417	Pin	1		
10	0147110904	Hexagon head screw	1		
11	4812221566	Hopper skirt	1		
12	0301234400	Washer plain	16		
13	5530999900	Hexagon head screw	1		
17	D938150770	Hex. screw	7		
18	0301235800	Plain washer(A) 13 x 24 x 2.5	11		
19	0147196264	Hex. head screw	16		
21	4812247539	Pressing plate	1		
22	0147141112	Hexagon head screw	2		
23	4812204190	Press plate	2		
24	0300013042	Flat washer	2		
25	5730008013	Hexagon nut	3		

Hopper, assembly 10FT Hopper assembly, right side

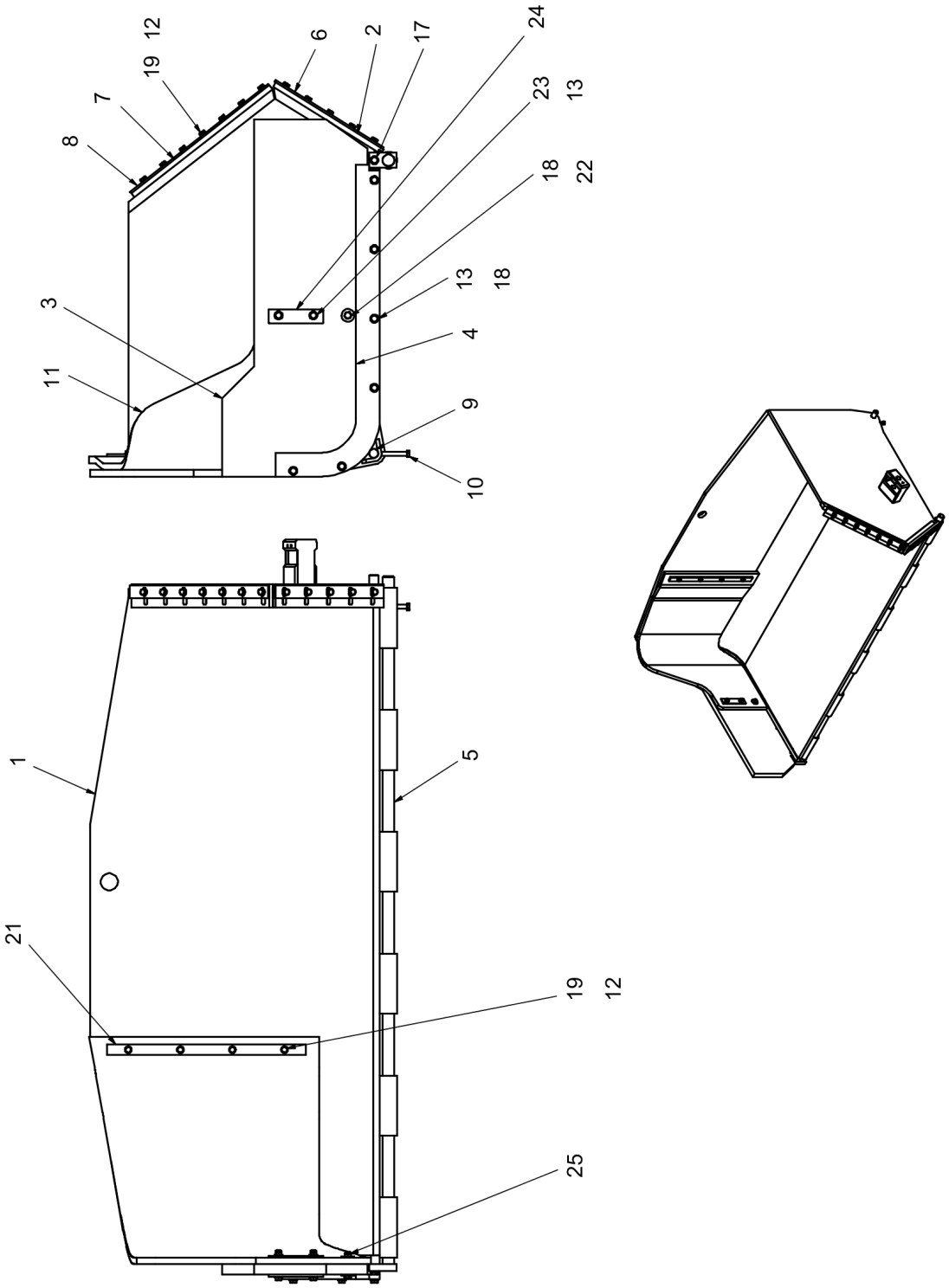

Item	Part No.	Name	Qty	L	SN INFO
1	4812223421	Right side hopper	1		
2	4812223541	Wiper	1		
3	4812223789	Skirt, hopper sides	1		
4	4812223411	Plate, clamp	1		
5	4812223414	Hopper pivot pin	1		
6	4812223409	Wiper backing, bottom	1		
7	4812223540	Wiper, long	1		
8	4812223410	Wiper backing plate, long	1		
9	4812223417	Pin	1		
10	0147110904	Hexagon head screw	1		
11	4812221567	Hopper skirt	1		
12	0301234400	Washer plain	16		
13	0301235800	Plain washer(A) 13 x 24 x 2.5	11		
17	5530999900	Hexagon head screw	1		
18	D938150770	Hex. screw	7		
19	0147196264	Hex. head screw	16		
21	4812247539	Pressing plate	1		
22	0300013042	Flat washer	2		
23	0147141112	Hexagon head screw	2		
24	4812204190	Press plate	2		
25	5730008013	Hexagon nut	3		

4812249999 Basic auger 3000mm 4812249999 Basic auger 3000mm

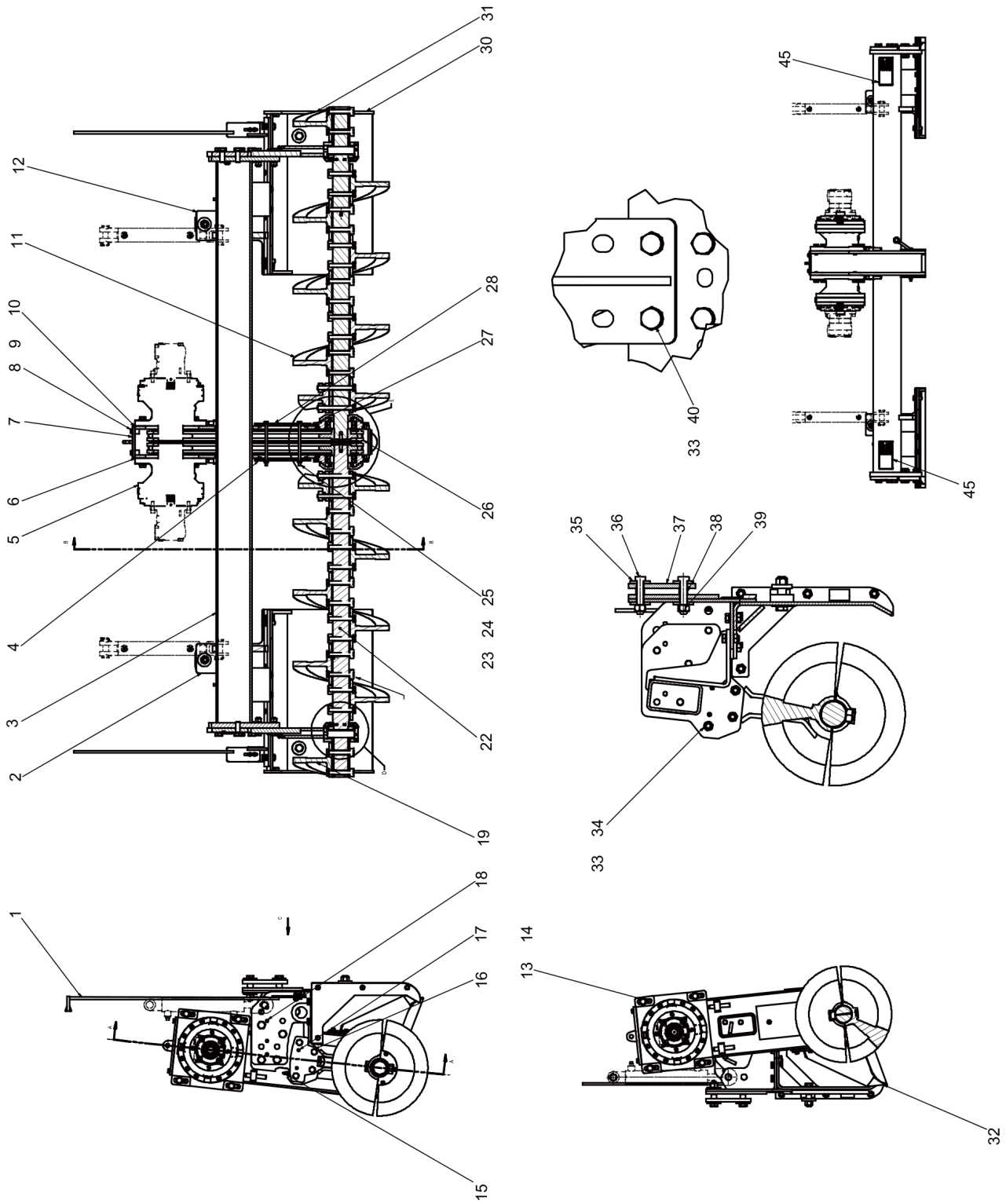

Item	Part No.	Name	Qty	L	SN INFO
1		Auger height guard assembly	1		
2	4812203042	Left sprocket box suspension	1		
3	4812249188	Adjusting sprocket box	1		
4	4730000369	Side part	1		
5		Auger drive assembly	2		
6	4812027539	Sealing	2		
7	4812026850	Cover	1		
8	0147136303	Screw hexagon	4		
9	0333310024	washer	4		
10	4812027538	Sealing	1		
11	4812203022	Basic auger flight assembly	1		
12	4812203043	Right sprocket box suspension	1		
13	0147147903	Screw DIN933	8		
14	0333310049	Lock washer	8		
15	D110080101	Dipstick	1		
16	5540204700	Hexagon head screw	8		
17	4812240304	Pin	4		
18	0108142500	Dowel pin	4		
19	4812203040	Left extent auger 430-154 assembly	1		
20	4749901853	Washer	11		
21	0147155103	Screw din933	9		
22		Main auger bearing assembly	2		
23	D932702032	Sealing	2		
24	5541396800	Hexagon nut	2		
25	4749900429	Screw	2		
26	4812027408	Chain	2		
27	4812006106	Seal	2		
28	4812027565	Cover	1		
29	0196155317	Threaded pin	4		
30		Base backplate assembly	1		
31	4812203041	Right extent auger 430-154 assembly	1		
32	4812246230	Prevent segregation device	1		
33	4749901809	Schnorr-lock washer	12		
34	5730007616	Hexagon nut	8		
35	4812243527	Washer	8		
36	5540165300	Hexagon head screw	4		
37	4812243526	Plate	2		

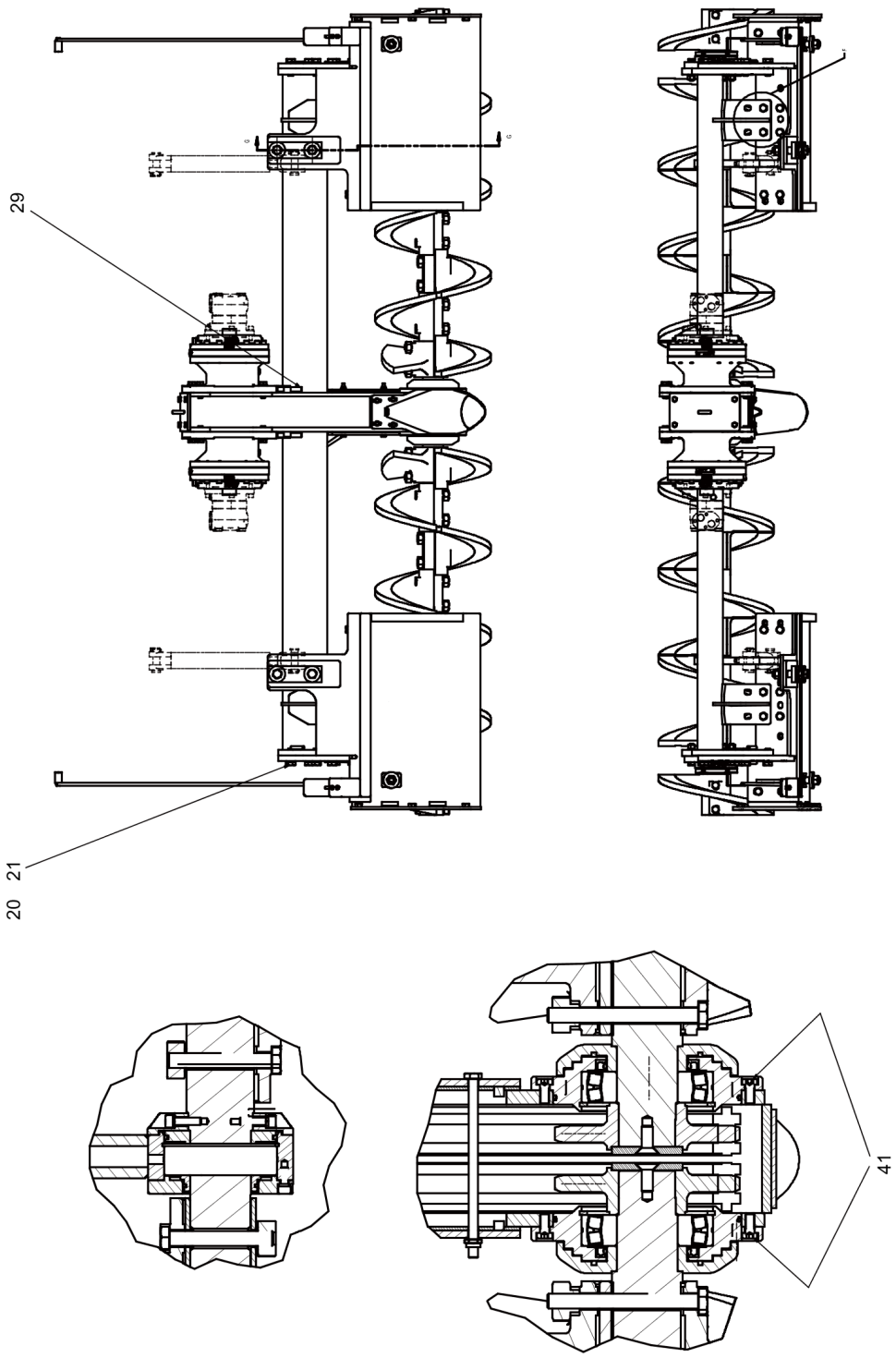
29
20
21
41

Item	Part No.	Name	Qty	L	SN INFO
38	4812223795	Bushing, bolt	4		
39	5730007674	Hexagon nut	4		
40	0147147703	Hex head screw M16 x 40	4		
41	0215001065	Hexagon socket head cap screw	20		
42		Glue x l	0.02		
43		Lubricating oil x L	3		
44		Lubrication oil	3.5		
45		Caution auger	2		
46		Grease	1.5		

4812249999 Basic auger 3000mm 4812248248 Auger height guard assembly

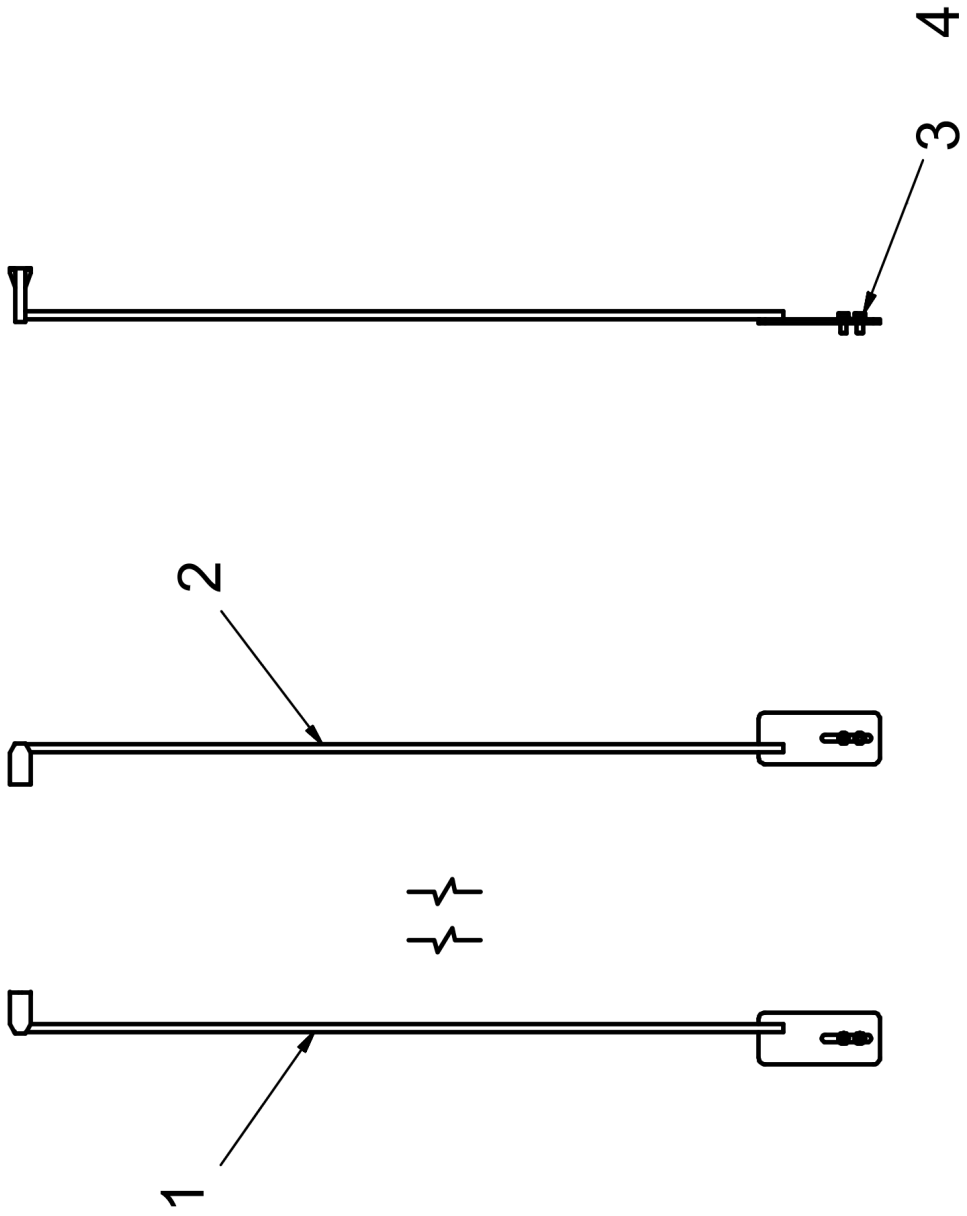

Item	Part No.	Name	Qty	L	SN INFO
1	4812203192	Auger height guard weldment-L	1		
2	4812203221	Auger height guard weldment-R	1		
3	D939390333	Cylinder screw	4		
4	4749901806	Washer	4		

4812249999 Basic auger 3000mm Auger gear

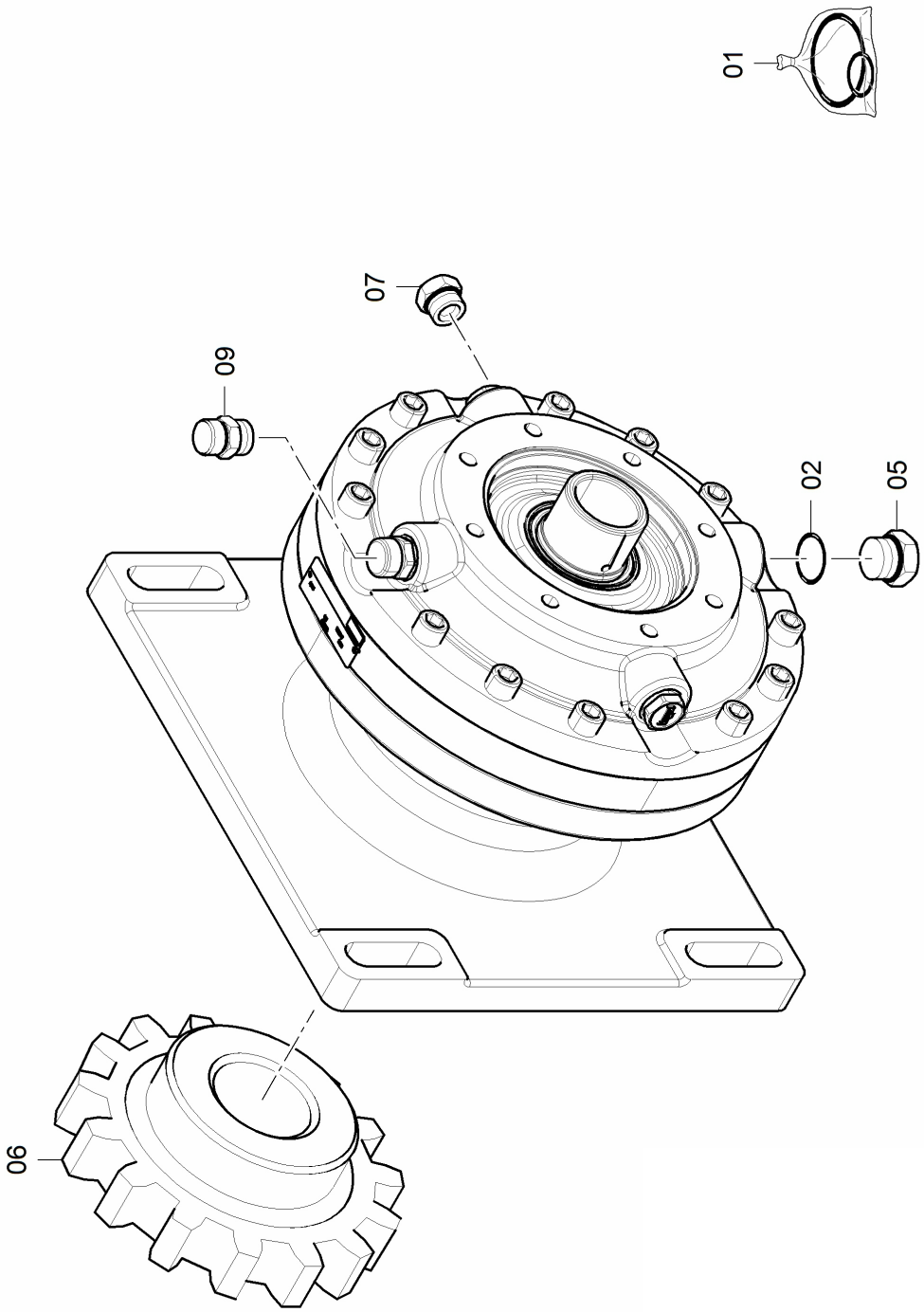

Item	Part No.	Name	Qty	L	SN INFO
Not Shown	4812045075	Auger gear			
1	4812009443	Seal kit	1		
2	4812009399	Washer	1		
5	4812034472	Plug screw	1		
6	4812009396	Drive sprocket	1		
7	4812009402	Plug	2		
9	4812034470	Screw	1		

4812249999 Basic auger 3000mm 4812203022 Basic auger flight assembly

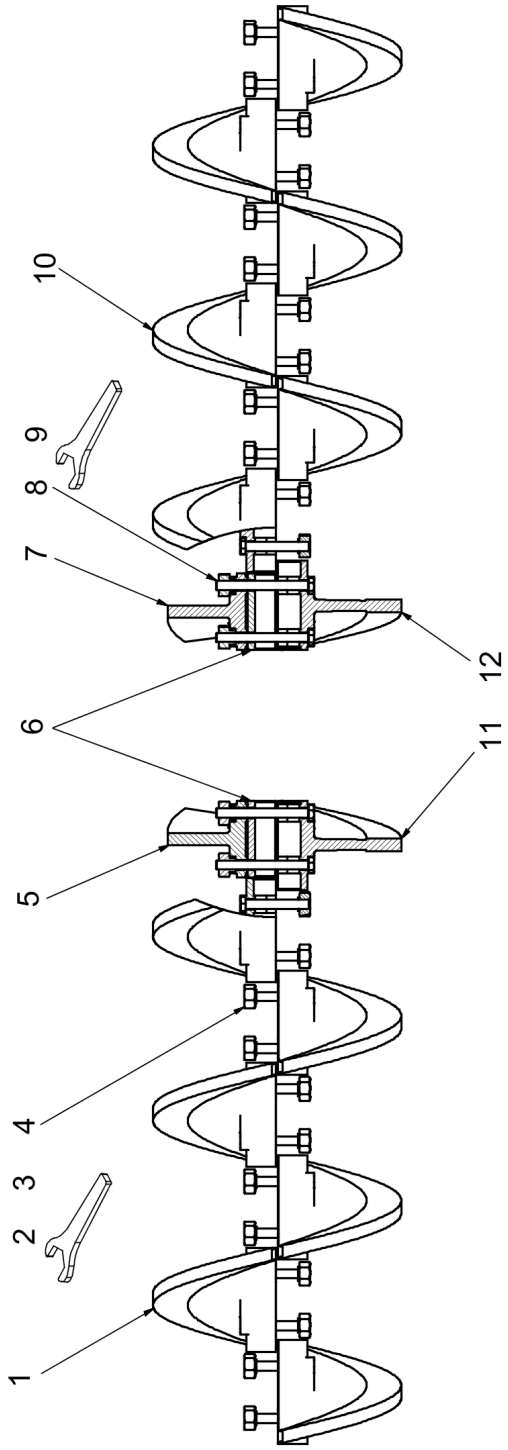

Item	Part No.	Name	Qty	L	SN INFO
1	4812243446	Half auger 430-180 left	6		
2	0147149103	Hex head screw	24		
3	0333310042	Schnorr-lock washer	24		
4	4749901556	Nut	24		
5	4812247883	Special auger, right 380MM	1		
6	4812249995	Half sleeve	2		
7	4812247882	Special auger, left 380MM	1		
8	0147195899	Screw m16x150	4		
9	4812249965	Nut	4		
10	4812243447	Half snail right, 430mm	6		
11	4812203324	Left auger flight 430-154	1		
12	4812203325	Right auger flight 430-154	1		
13	4812043214	Glue x l	0.01		

4812249999 Basic auger 3000mm 4812203040 Left extend auger 430-154

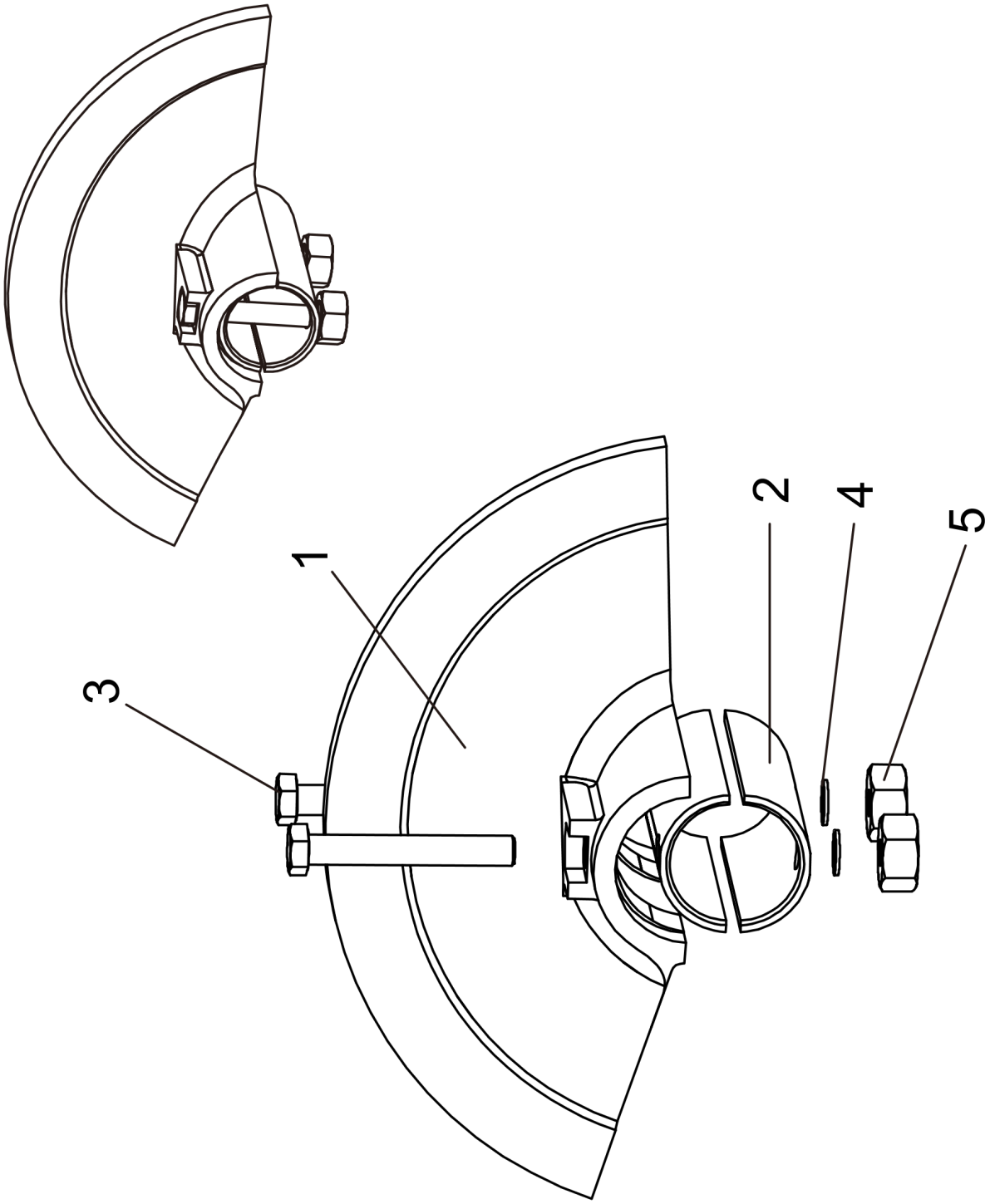

Item	Part No.	Name	Qty	L	SN INFO
1	4812203324	Left auger flight 430-154	1		
2	4812203211	Sleeve	2		
3	0147149103	Hex head screw	2		
4	0333310042	Schnorr-lock washer	2		
5	4749901556	Nut	2		

4812249999 Basic auger 3000mm 4812203017 Main auger bearing assembly

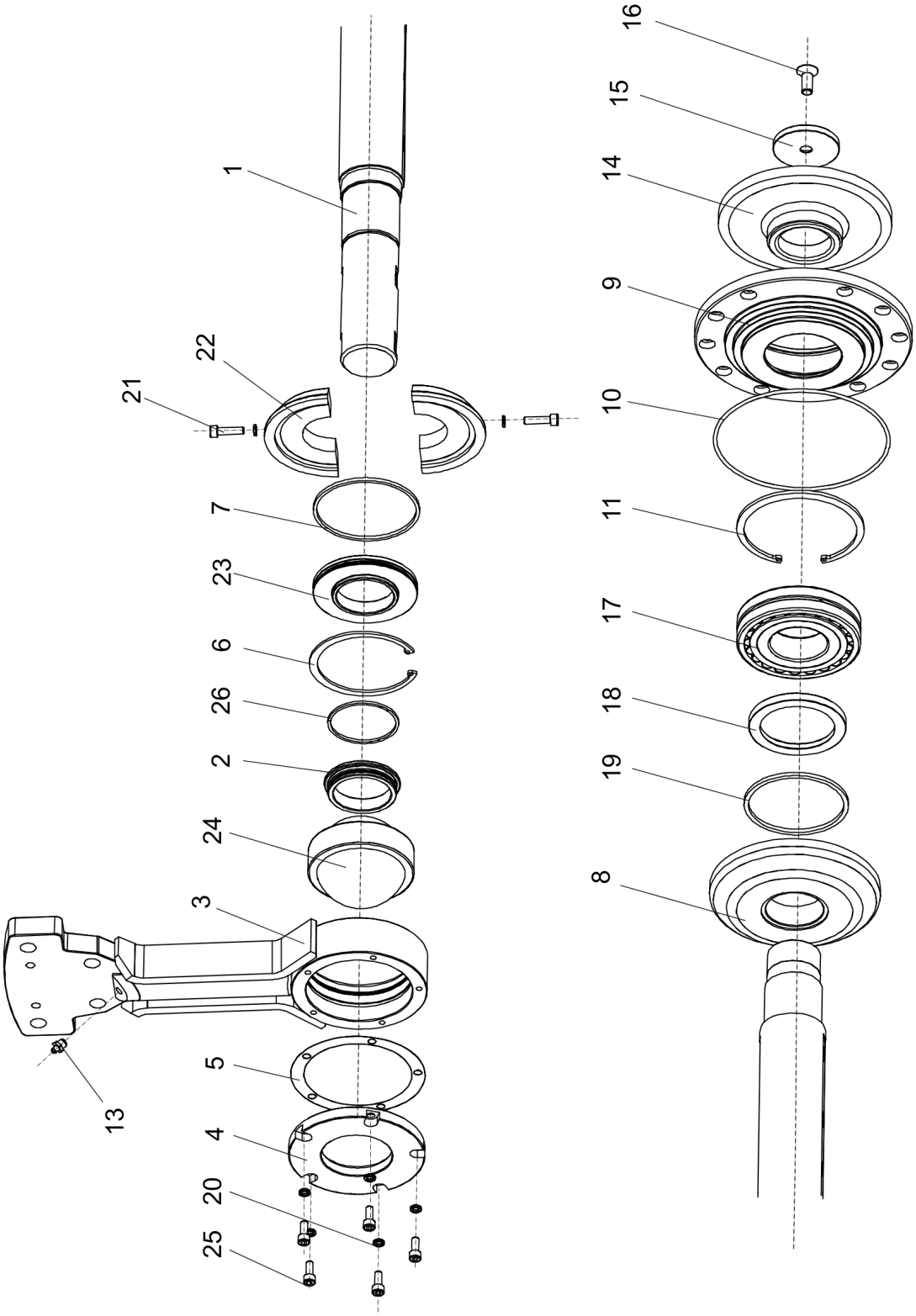

Item	Part No.	Name	Qty	L	SN INFO
1	4812203018	Main auger shaft	1		
2	4812246301	Sleeve	1		
3	4812246303	Bearing retainer	1		
4	4812246302	Bearing cap	1		
5	4812246283	Sealing	1		
6	4812240178	Circlip	1		
7	4812240135	Sealing	1		
8	4812004444	Bearing cap	1		
9	4812004445	Bearing flange	1		
10	D932315443	O-ring	1		
11	D936034092	Circlip	1		
12	4812040894	Grease	0.12		
13	4812240234	Grease nipple	1		
14	4812030443	Sprocket	1		
15	4812026723	Cover	1		
16	0216195762	Countersunk screw	1		
17	4812030667	Bearing	1		
18	4812007433	Radial shaft seal	1		
19	D932776590	Sealing packing x m	1		
20	4812240307	Washer	7		
21	0211132603	Hexagon socket head cap screw	2		
22	4812246299	Bearing cap up	2		
23	4812246300	Bearing cap	1		
24	4812240177	Bearing	1		
25	0211132303	Hex sock screw	5		
26	4812246286	Sealing	1		

4812203048 Base backplate assembly 4812203048 Base backplate assembly

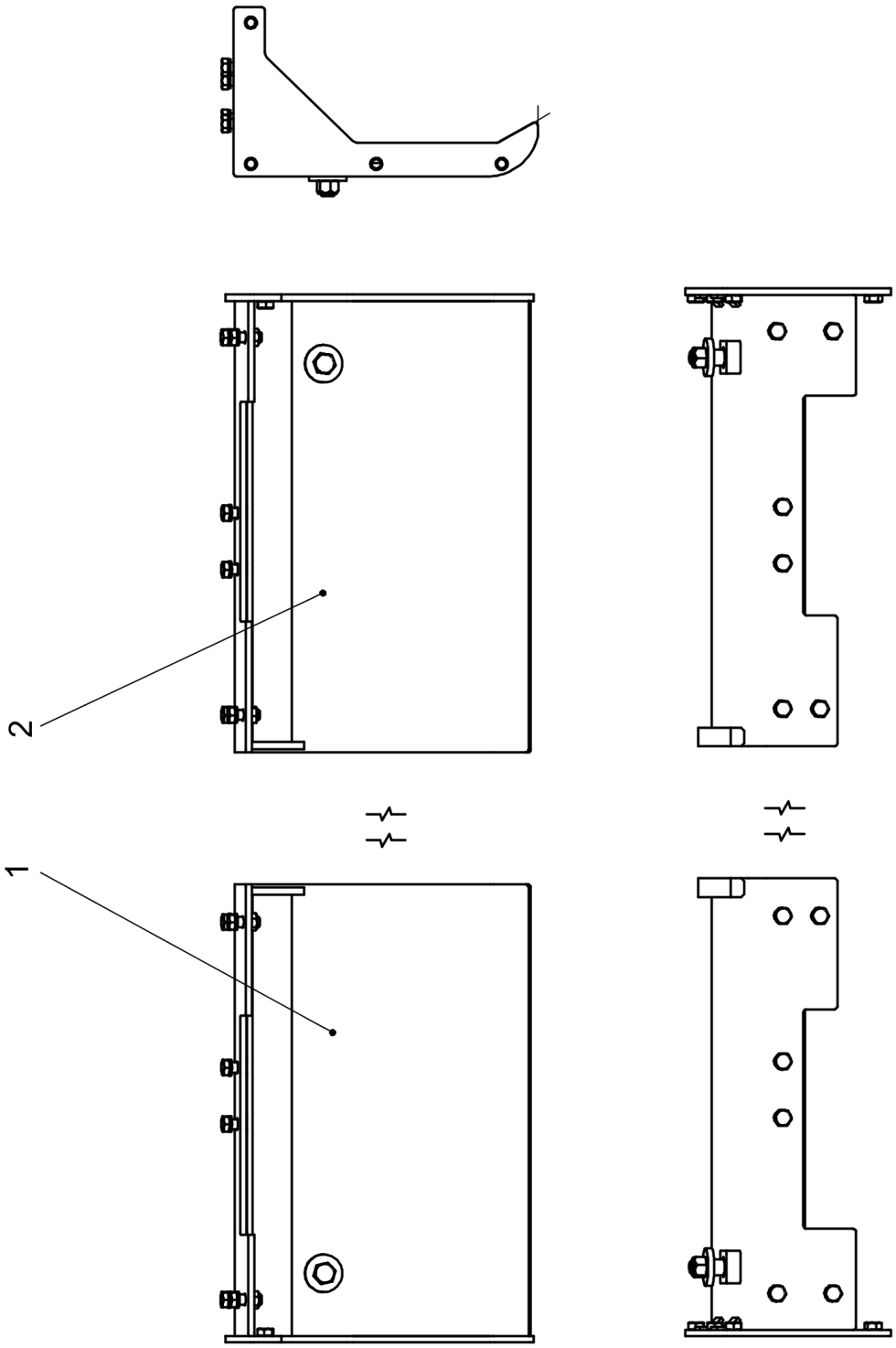

Item	Part No.	Name	Qty	L	SN INFO
1		Left main support plate assy	1		
2		Right main support plate assy	1		

4812203048 Base backplate assembly 4812203045 Left main support plate assy

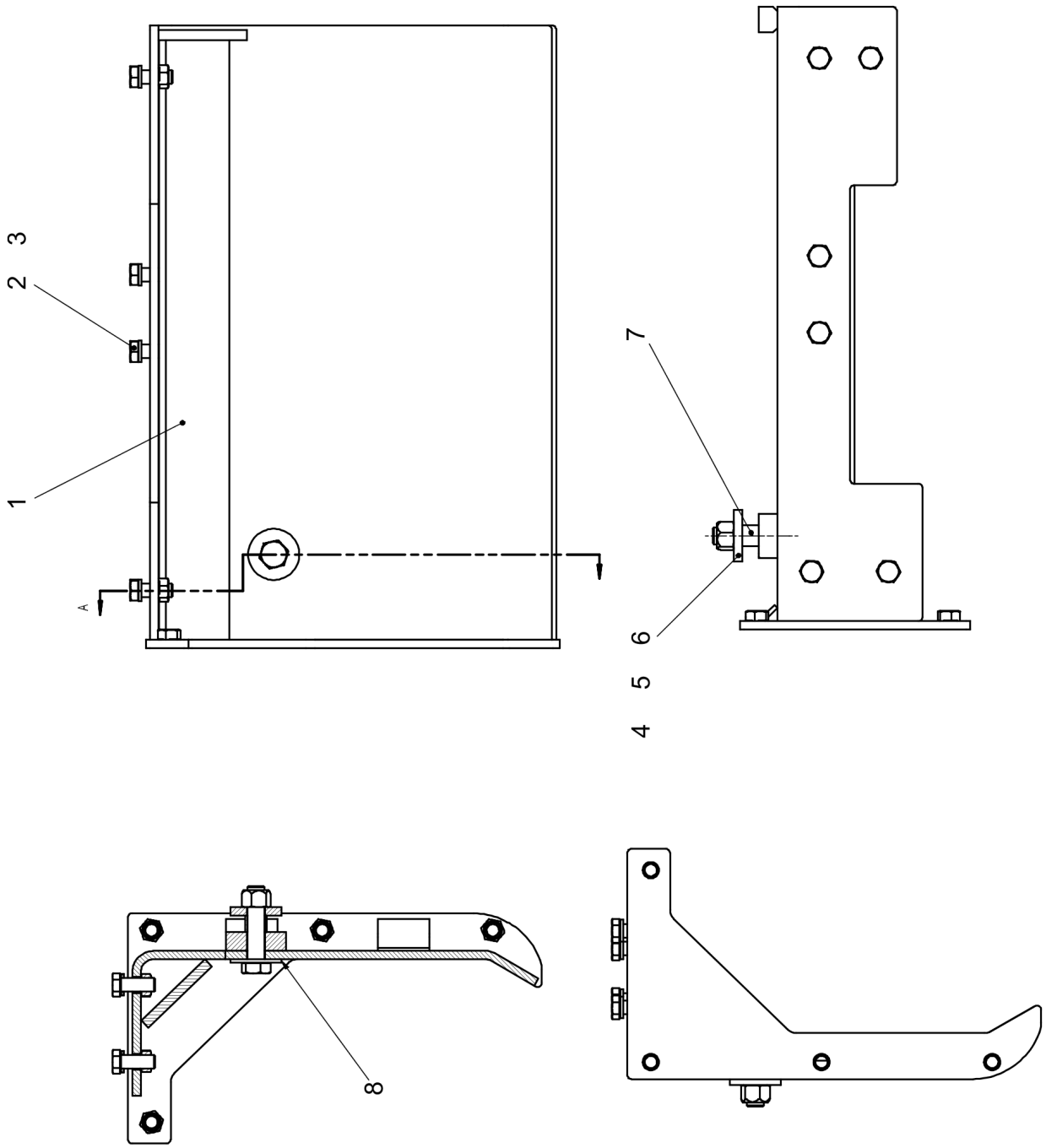

Item	Part No.	Name	Qty	L	SN INFO
1	4812203046	Left main support plate weldment	1		
2	147147703	HEX. HEAD SCREW	6		
3	4749901809	Schnorr-lock washer	6		
4	5730007674	Hexagon nut	1		
5	4812223294	Hexagon bolt	1		
6	4812243710	Washer	1		
7	4812223795	Bushing, bolt	1		
8	0300013036	flat washer	1		

4812203048 Base backplate assembly 4812203050 Right main support plate assy

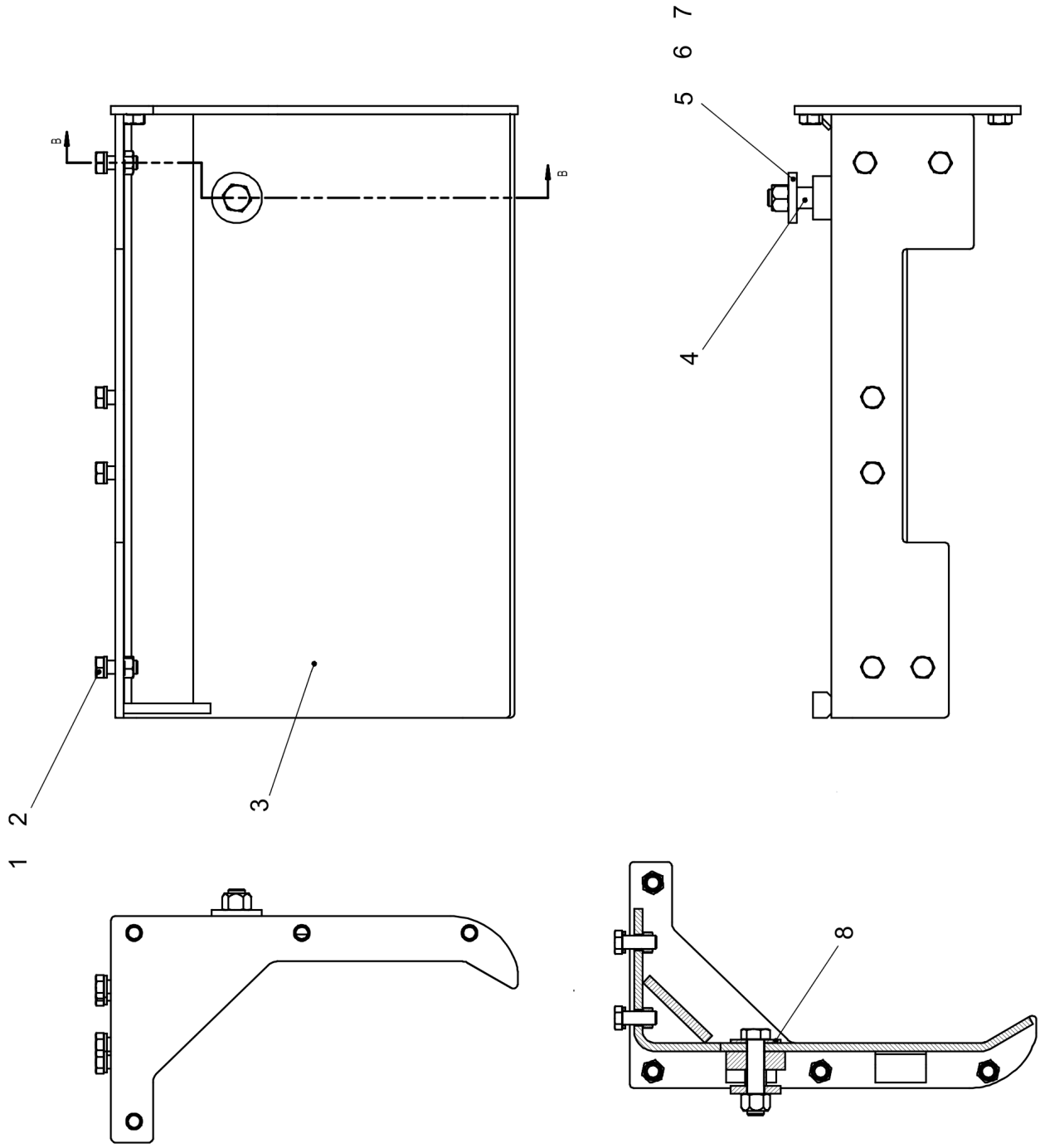

Item	Part No.	Name	Qty	L	SN INFO
1	4749901809	Schnorr-lock washer	6		
2	0147147703	Hex head screw M16 x 40	6		
3	4812203051	Right main support plate weldment	1		
4	4812223795	Bushing, bolt	1		
5	4812243710	Washer	1		
6	4812223294	Hexagon bolt	1		
7	5730007674	Hexagon nut	1		
8	0300013036	flat washer	1		

4812249999 Basic auger 3000mm 4812203041 Right extend auger

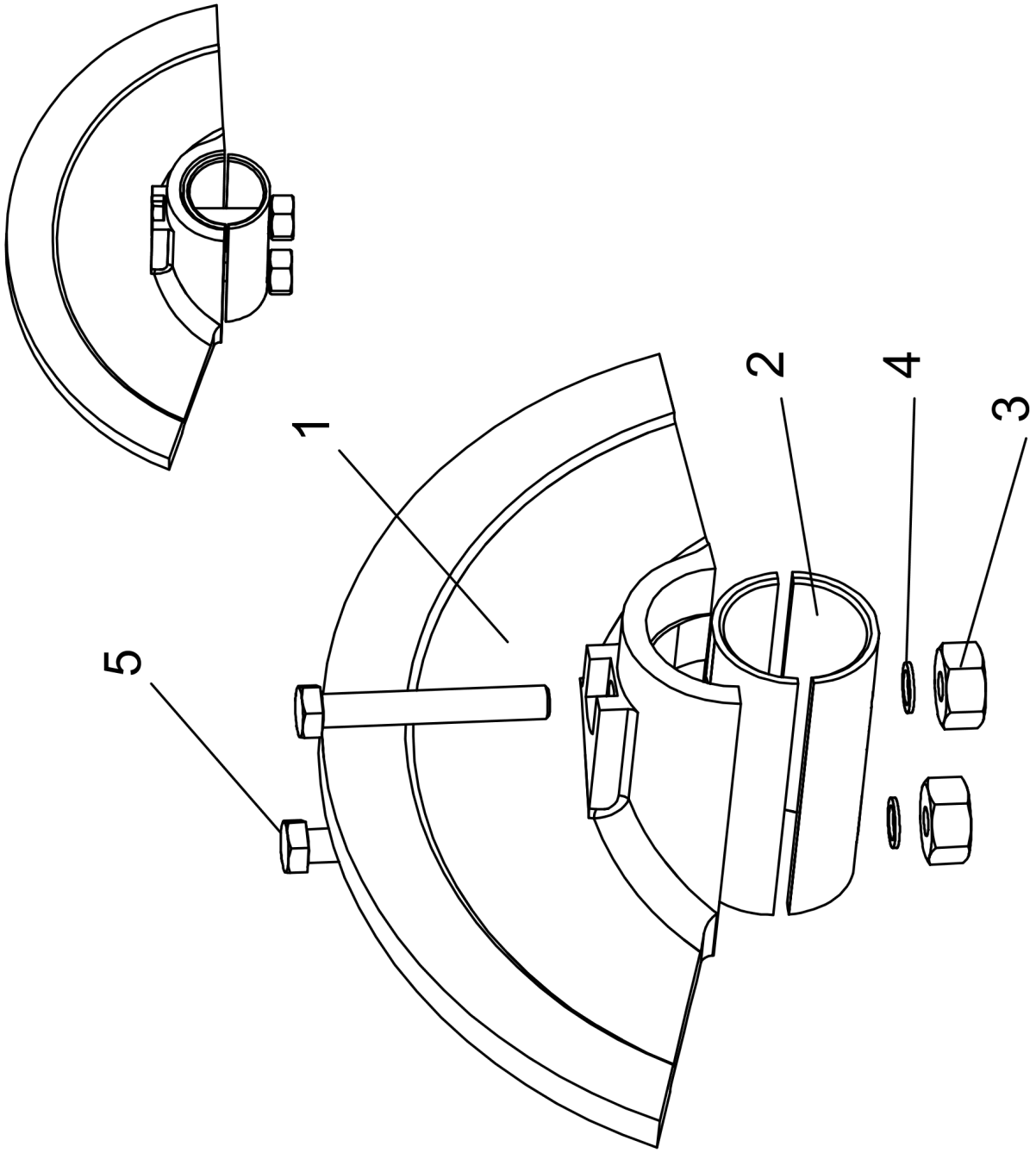

Item	Part No.	Name	Qty	L	SN INFO
1	4812203325	Right auger flight 430-154	1		
2	4812203211	Sleeve	2		
3	4749901556	Nut	2		
4	0333310042	Schnorr-lock washer	2		
5	0147149103	Hex head screw	2		

4812249999 Basic auger 3000mm Prevent segregation device

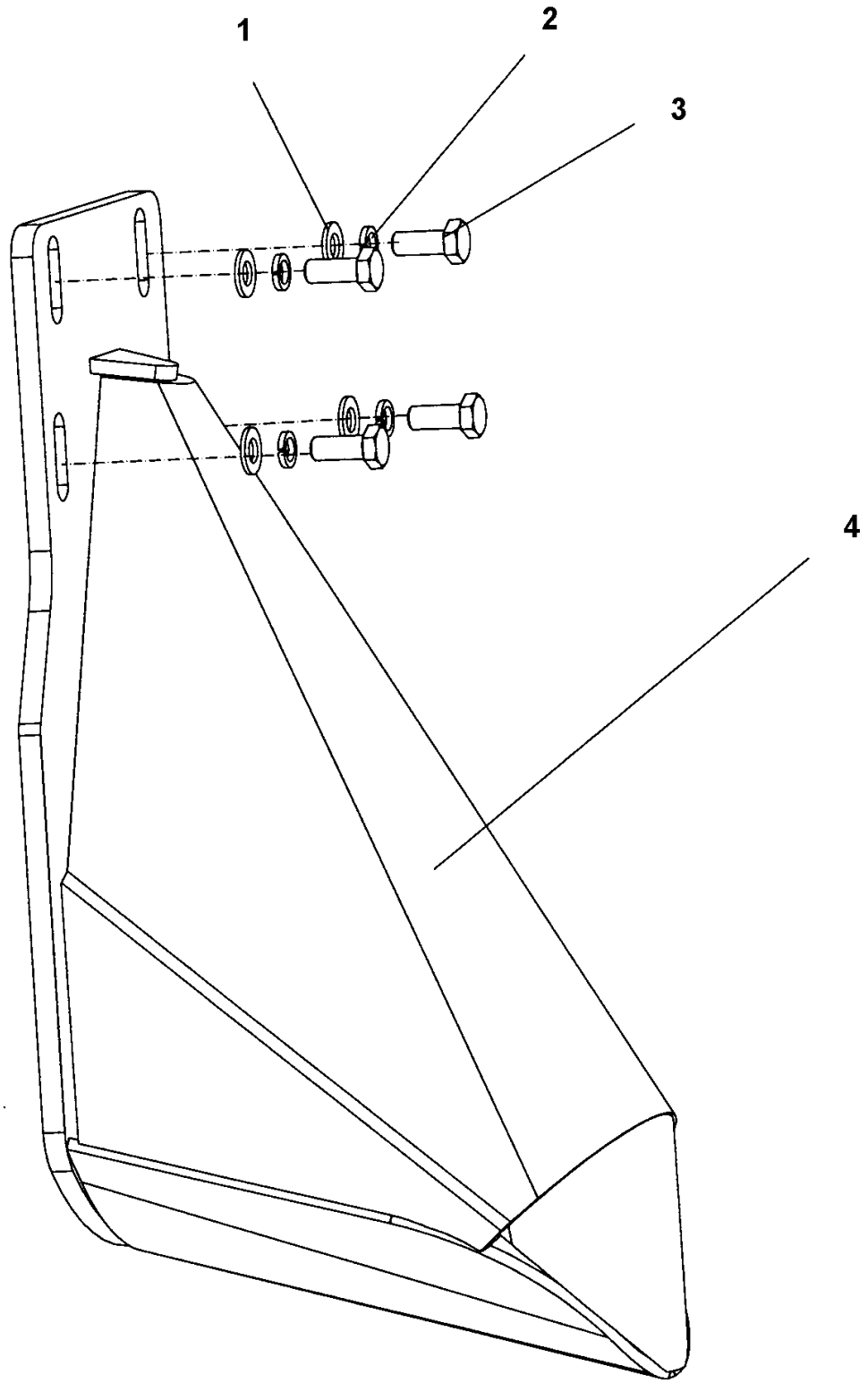

Item	Part No.	Name	Qty	L	SN INFO
1	0301233500	Plain washer(A) 8.4 x 16 x 1.6	4		
2	4812240307	Washer	4		
3	0147132303	Hex head screw M8 x 20	4		
4	4812246229	Prevent segregation device	1		

4812204590 F1000 Center auger hydrl. kit 250 STD 4812204590 F10 Center auger hydraulic kit

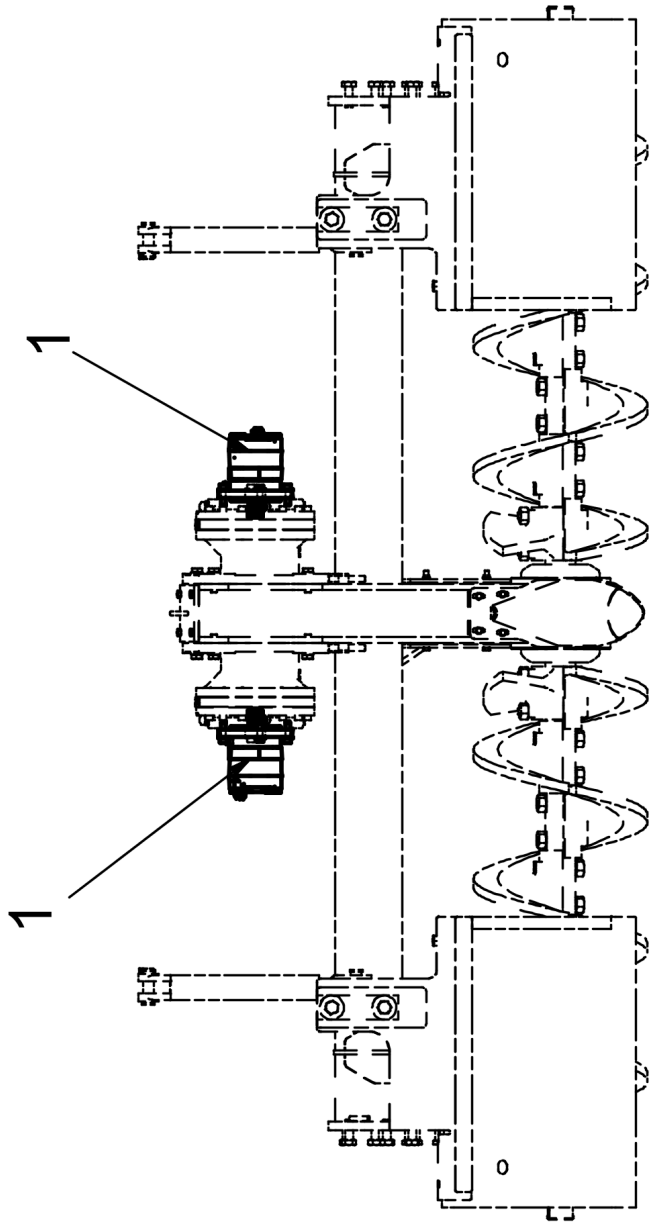

Item	Part No.	Name	Qty	L	SN INFO
1	4812204592	F1000 Central auger motor 250	2		
2	4812204591	F1000 Central auger hose kit	1		

4812204590 F1000 Center auger hydrl. kit 250 STD 4812204592 Central auger motor

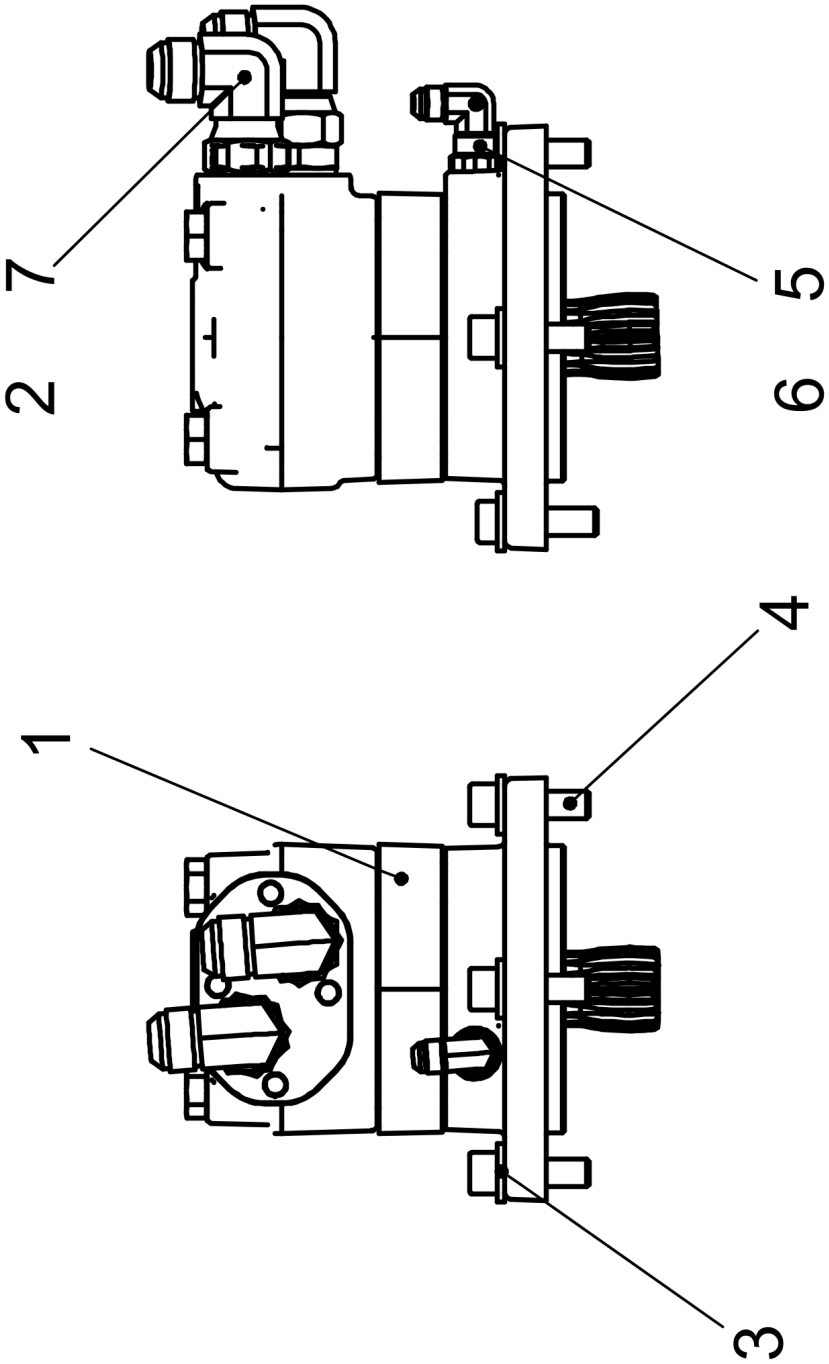

Item	Part No.	Name	Qty	L	SN INFO
1	4812204514	Motor	1		
2	4812241444	Adapter, straight	2		
3	D939776117	Flat washer	4		
4	0211140303	Hex sock. Screw M12 x 40	4		
5	4812204769	Adapter	1		
6	4812204770	Adapter	1		
7	D717801912	Elbow, 12-12	2		

4812204590 F1000 Center auger hydrl. kit 250 STD 4812204591 Center auger hose kit

NO EXPLODED VIEW
AVAILABLE
FOR THIS BOM

Item	Part No.	Name	Qty	L	SN INFO
1	4812204333	Hose	2		
2	4812204709	Hose	4		

Platform, assembly Platform, assembly

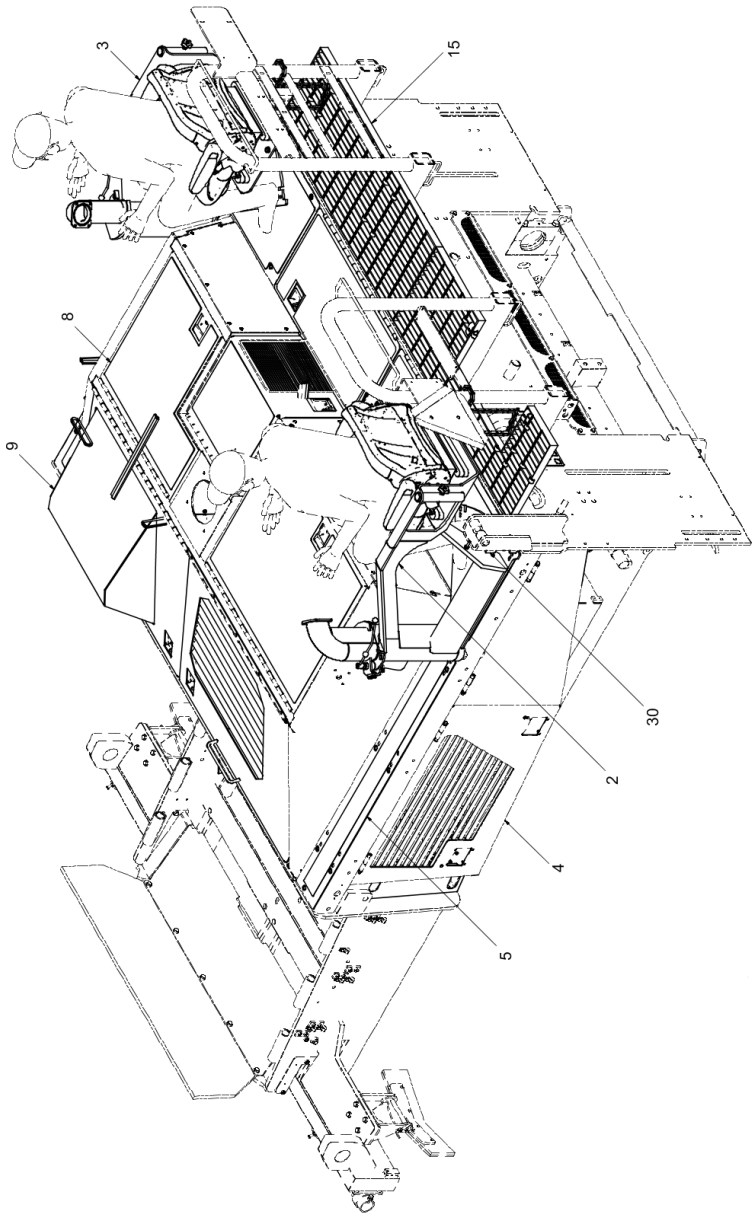

Item	Part No.	Name	Qty	L	SN INFO
2		LH operator station, assembly	1		
3		RH operator station, assembly	1		
4		Side doors, platform, assembly	1		
5		Footwell, assembly	1		
6		Divider complete, assembly	1		
7		Cooler shroud, assembly	1		
8		Anti slip tape, assembly	1		
9		Door assembly	1		
13		Foam assembly	1		
15	4812223956	Grating, rear	1		
16	4812223959	Bracket, sensor connector	2		
17	4812223957	Clip, Grating tie down	6		
18	4812223958	Clip, Grating tie down	2		
19	0147136403	Hex. head screw	10		
20	0291118549	Hexagon nut	6		
21	0301234400	Washer plain	4		
22	D939776115	Washer	12		
23	4812001284	Hexagon screw	6		
24	D939776113	Washer	22		
25	0291111000	Nut DIN985	8		
26	0147125103	Hex. Head screw	4		
27	0147132503	Hex head screw	6		
28	0301232100	Washer DIN125	16		
29	0291112854	Hexagon nut	4		
30	4812224269	Bracket, seat lock	2		
33	D938155547	Hexagon bolt	4		
34	0298010400	Hexagon weld nut	4		
35	4749301479	Clip	110		
36	4812224462	Seat lock, assembly	2		
40		Hood frame assembly	1		
41		Storage box	1		
42	4812247645	Grating	1		
42	4812249361	Grating	1		
43	4812247646	Clip	2		
44	0147196448	Hexagon head screw	2		

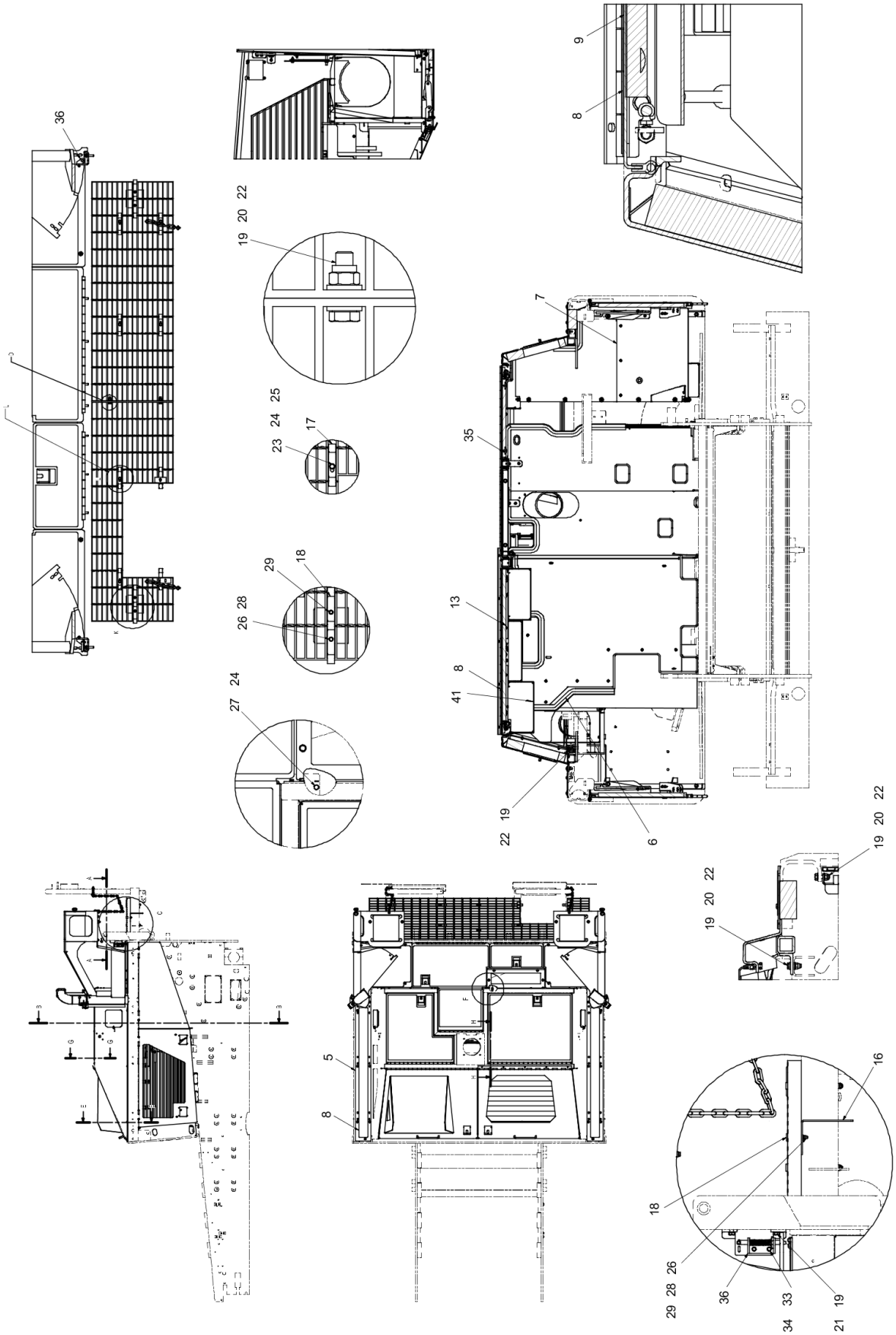
36
22
20
19
25
24
23
17
29
18
28
26
24
27
9
8
7
35
13
8
41
19
22
6
22
20
19
22
20
19
5
8
16
18
26
29
28
36
33
34
19
21

This page intentionally left blank

Platform, assembly LH operator station, assembly

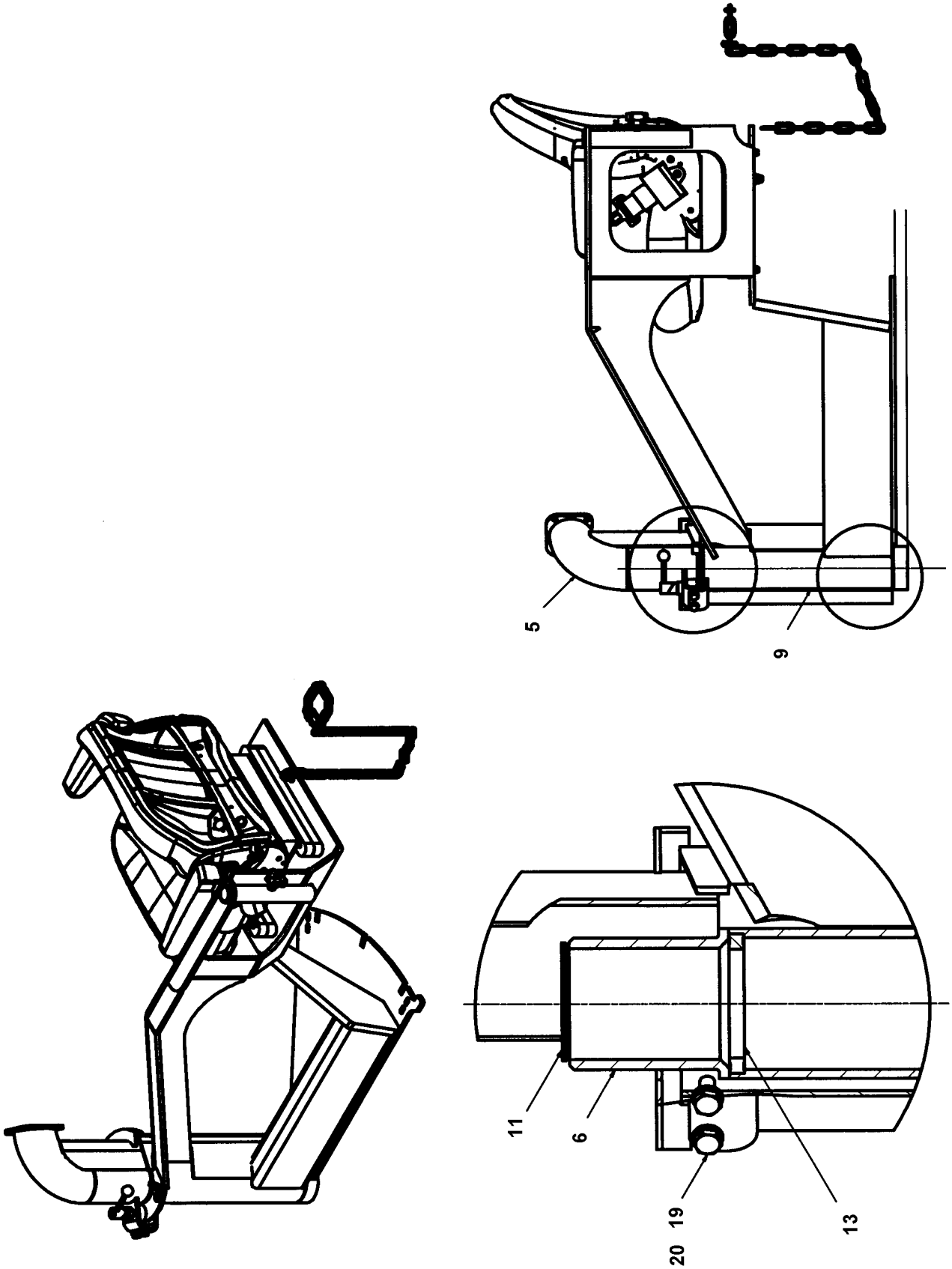

Item	Part No.	Name	Qty	L	SN INFO
2	4812223790	Seat spacer	4		
3	4812222544	Set screw	1		
4	4812223254	Chain assy, operator station	1		
5	4812223264	Swing arm, LH weldment	1		
6	4812223274	Spacer, swing arm	1		
7	4812223275	Stop, lower bearing	1		
8	4812223276	Lock clamp	1		
9	4812223288	LH swing station	1		
10	4812223293	Knob, umbrella clamp	1		
11	4812223297	Snap ring	1		
12	D717113021	Seat	1		
01	4812250003	Seat	1		
13	D717113047	Bearing, operator swing arm	2		
14	D717800736	Screw, 1/2'	2		
15	D717800827	Lock nut, 5/16'	4		
16	D717800862	Lock nut, 1/2'	2		
17	D717801051	Narrow washer, 0.313'	4		
18	D717801086	Flat washer, 0.5'	4		
19	0147136003	Hexagon bolt	2		
20	0301234400	Washer plain	2		
21	4812221830	Plunger	1		

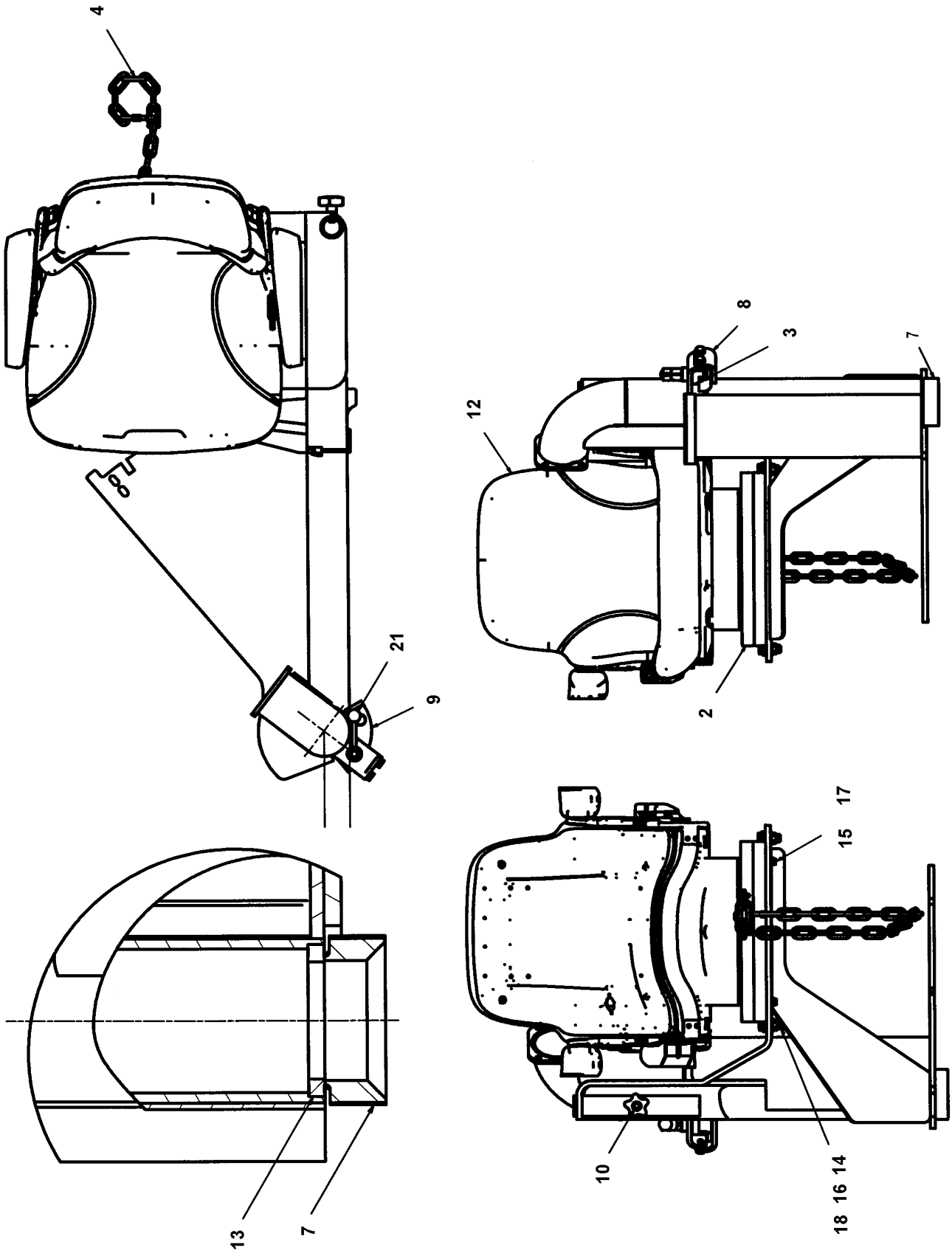
4
21
9
13
7
8
3
7
12
2
17
15
10
18 16 14

This page intentionally left blank

Platform, assembly RH operator station, assembly

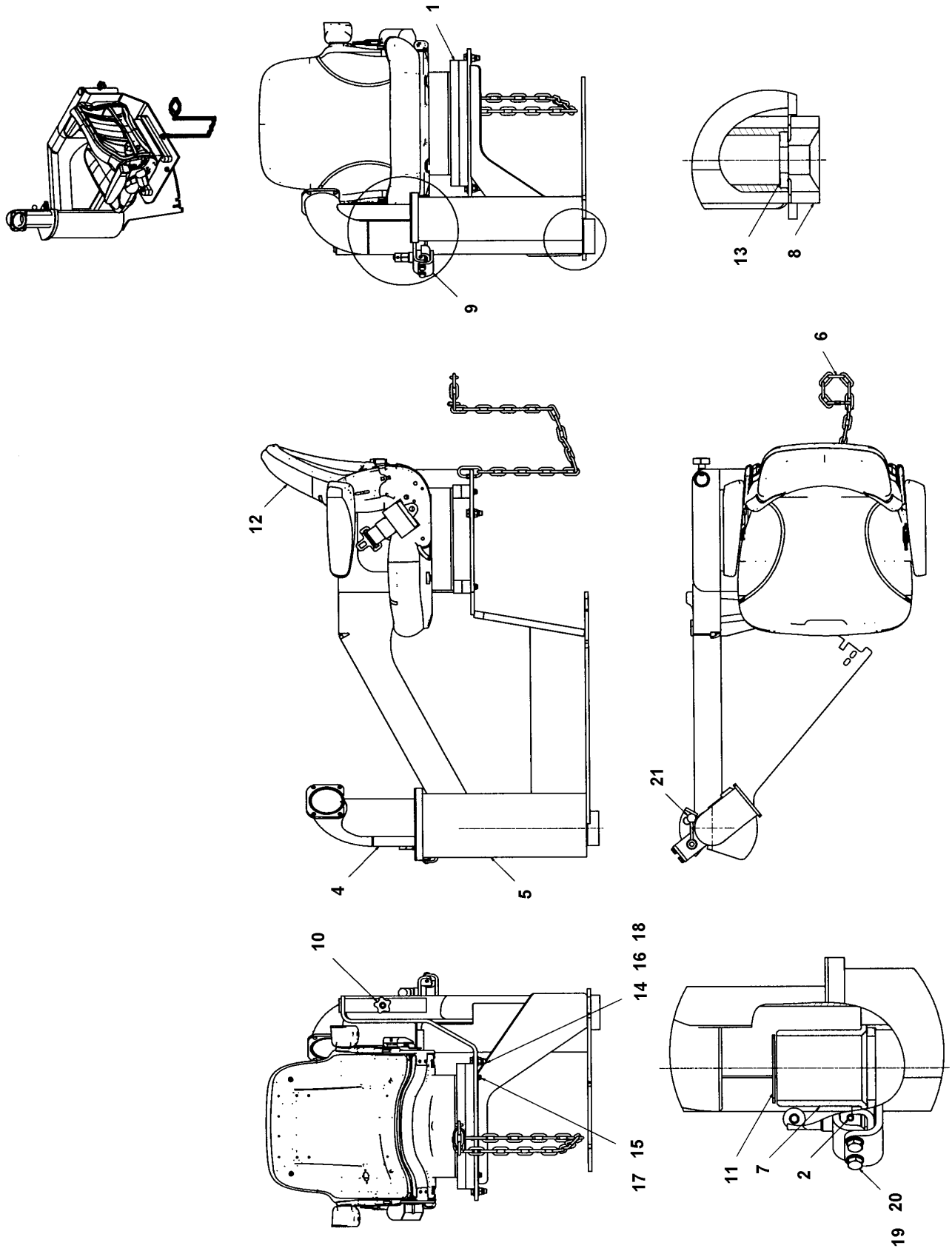

Item	Part No.	Name	Qty	L	SN INFO
1	4812223790	Seat spacer	4		
2	4812222544	Set screw	1		
4	4812223248	Swing arm, RH weldment	1		
5	4812223253	RH swing station	1		
6	4812223254	Chain assy, operator station	1		
7	4812223274	Spacer, swing arm	1		
8	4812223275	Stop, lower bearing	1		
9	4812223276	Lock clamp	1		
10	4812223293	Knob, umbrella clamp	1		
11	4812223297	Snap ring	1		
12	D717113021	Seat	1		
01	4812250003	Seat	1		
13	D717113047	Bearing, operator swing arm	2		
14	D717800736	Screw, 1/2'	2		
15	D717800827	Lock nut, 5/16'	4		
16	D717800862	Lock nut, 1/2'	2		
17	D717801051	Narrow washer, 0.313'	4		
18	D717801086	Flat washer, 0.5'	4		
19	0301234400	Washer plain	2		
20	0147136003	Hexagon bolt	2		
21	4812221830	Plunger	1		

Platform, assembly Side doors, platform, assembly

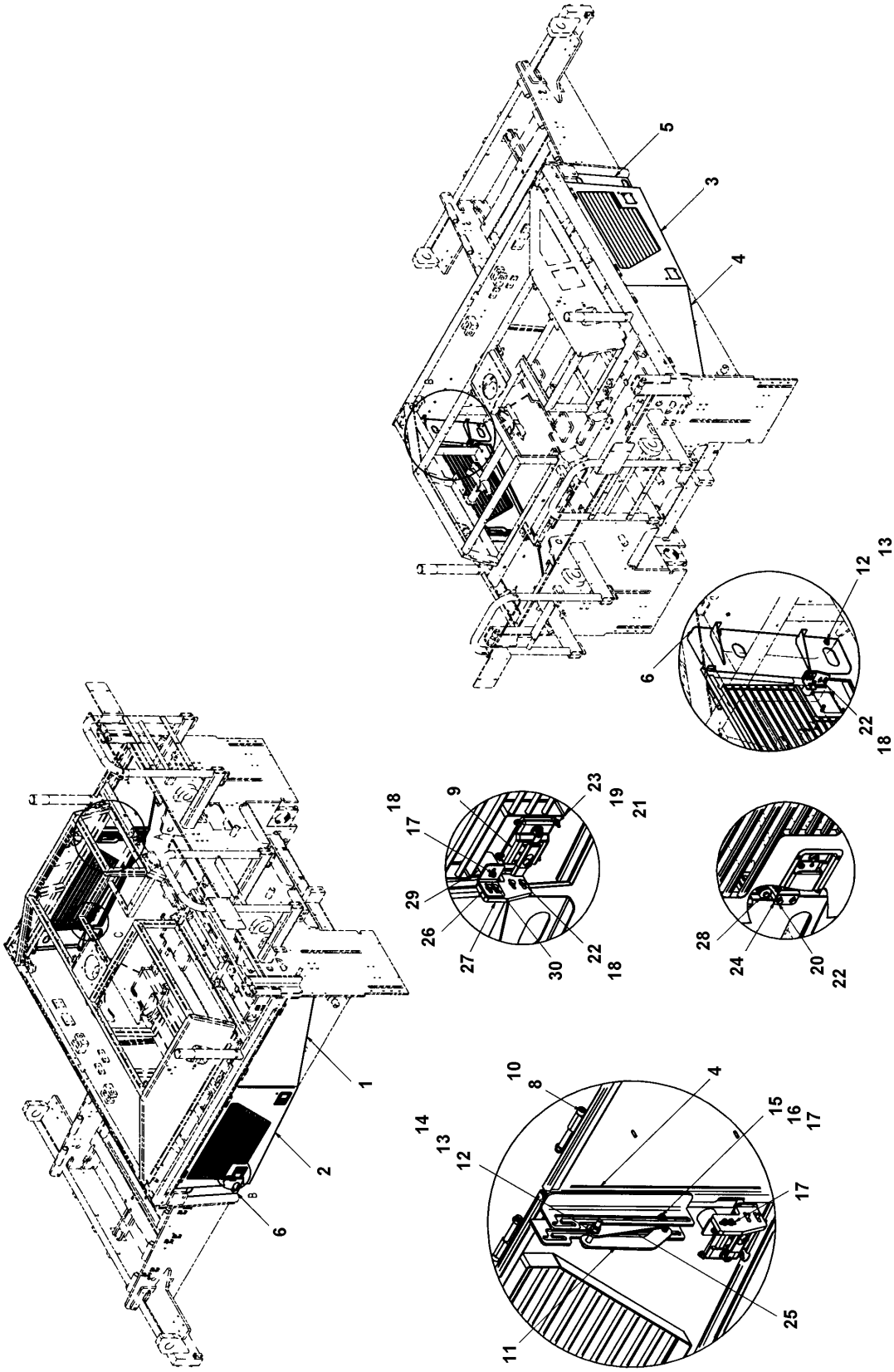

Item	Part No.	Name	Qty	L	SN INFO
1	4812223550	LH side panel, rear	1		
2	4812223551	LH side panel	1		
3	4812223552	RH side panel	1		
4	4812223553	RH side panel, rear	1		
5	4812223554	Bracket, right side door, assembly	1		
6	4812223555	Bracket, left side door, assembly	1		
8	D717800820	Lock nut, M10	8		
9	D717111535	Paddle latch	4		
10	D717111580	Screw, M10	8		
11	4812223557	Plate, door stop	2		
12	0301234400	Washer plain	8		
13	0291118549	Hexagon nut	6		
14	0147137003	Screw	2		
15	4812223877	Shoulder screw	4		
16	0301233500	Plain washer(A) 8.4 x 16 x 1.6	4		
17	5730015118	Hexagon nut	21		
18	0147124703	Screw M6 x 20	12		
19	D717801142	Washer, 10	16		
20	0147124403	Hex head screw M6 x 12	8		
21	D717801002	Hex nut, M10	16		
22	0301232100	Washer DIN125	36		
23	D717800883	Lock nut, M10	16		
24	4812223558	Catch, side door	4		
25	4812247480	Plate, side door stop	2		
26	4812224217	Angle mounting	4		
27	4812224218	Latch plate	4		
28	4812221388	Door latch plunger	4		
29	4812221389	Door latch socket	4		
30	D938155547	Hexagon bolt	12		

Platform, assembly Footwell, assembly

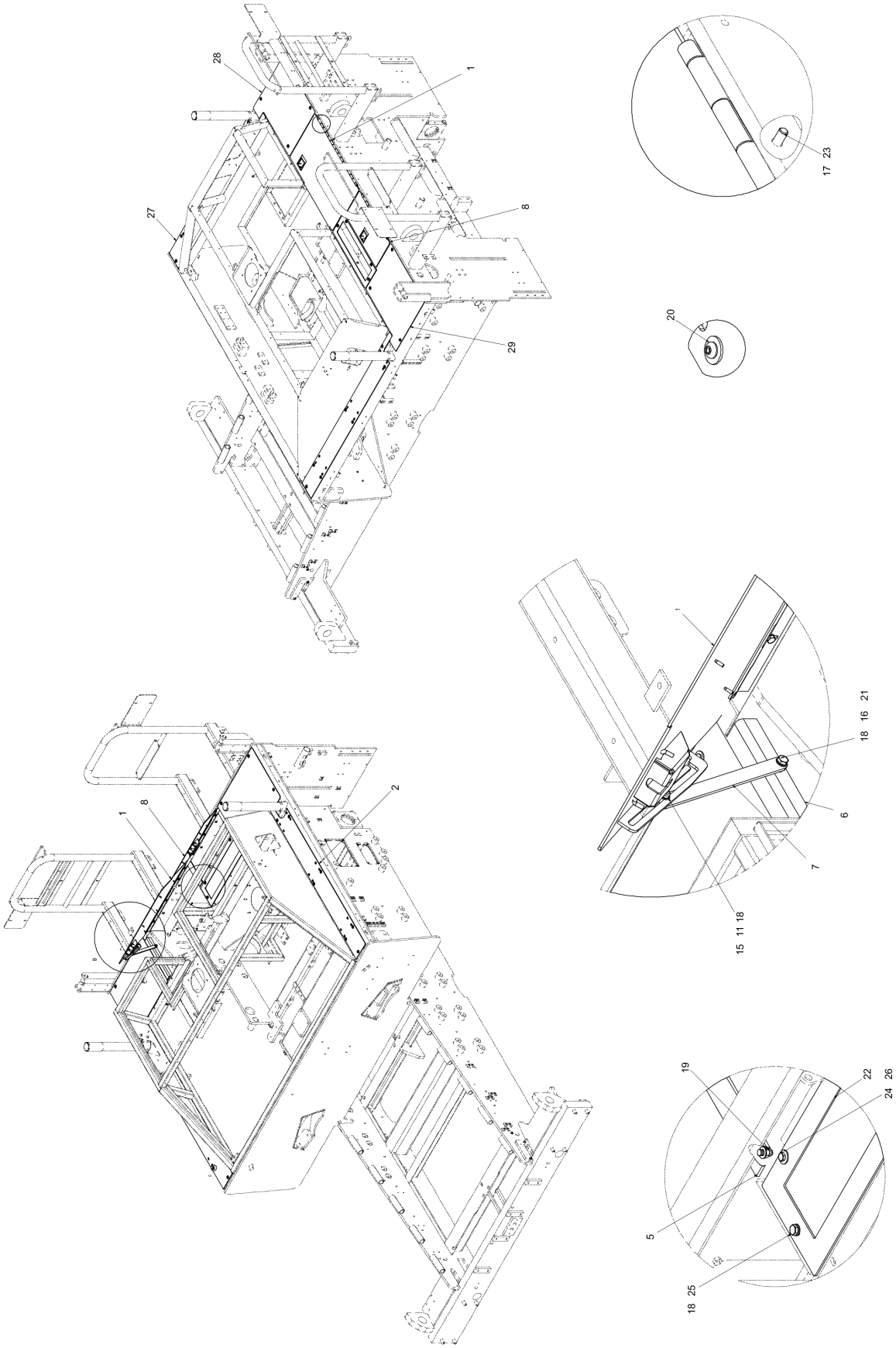

Item	Part No.	Name	Qty	L	SN INFO
1	4812223210	Middle door	1		
2	4812223215	Plate, left side extension	1		
5	4812223218	Middle door, weldment	2		
6	4812223220	Center floor support	1		
7	4812223222	Door stop, rear hood	1		
8	4812223223	Middle door	1		
11	4812223244	Hexagon socket head shoulder	1		
15	0266211000	Nut DIN934	1		
16	0147196264	Hex. head screw	1		
17	0301233500	Plain washer(A) 8.4 x 16 x 1.6	7		
18	0301234400	Washer plain	12		
19	0291118549	Hexagon nut	6		
20	D939142413	Round head screw	22		
21	0266211100	Hexagon nut	1		
22	4812224279	Cover plate, DC box	1		
23	0147132503	Hex head screw	7		
24	0147132303	Hex head screw M8 x 20	2		
25	0147136003	Hexagon bolt	2		
26	0300013040	Flat washer	24		
27	4812224309	Right side extension	1		
28	4812224311	Base plate	1		
29	4812224310	Base plate	1		

Platform, assembly Divider complete, assembly

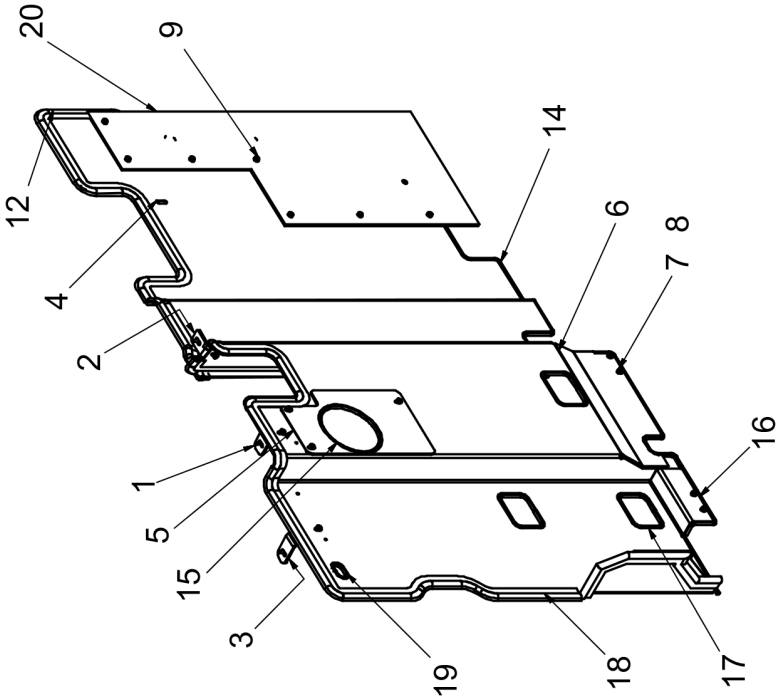

Item	Part No.	Name	Qty	L	SN INFO
1	4812223361	Driver mounting, center	1		
2	4812223363	Driver mounting, LH	1		
3	4812223365	Driver mounting, RH	1		
4	4812223367	Driver plate, LH	1		
5	4812223368	Cover, divider plate, RH	1		
6	4812223369	Divider plate, RH	1		
7	0147124403	Hex head screw M6 x 12	4		
8	0301232100	Washer DIN125	16		
9	0147124703	Screw M6 x 20	12		
12	4812222341	Beading, divider plate, LH	1		
14	4812222089	Beading, divider plate, LH	1		
15	4812222090	Beading, divider plate, RH	1		
16	4812222340	Beading, divider plate, RH	1		
17	4812222093	Beading, divider plate, RH	3		
18	4812222332	Beading, divider plate, RH	1		
19	4812222347	Beading, divider plate, RH	1		
20	4812248177	Rubber plate	1		
21	0298010400	Hexagon weld nut	7		

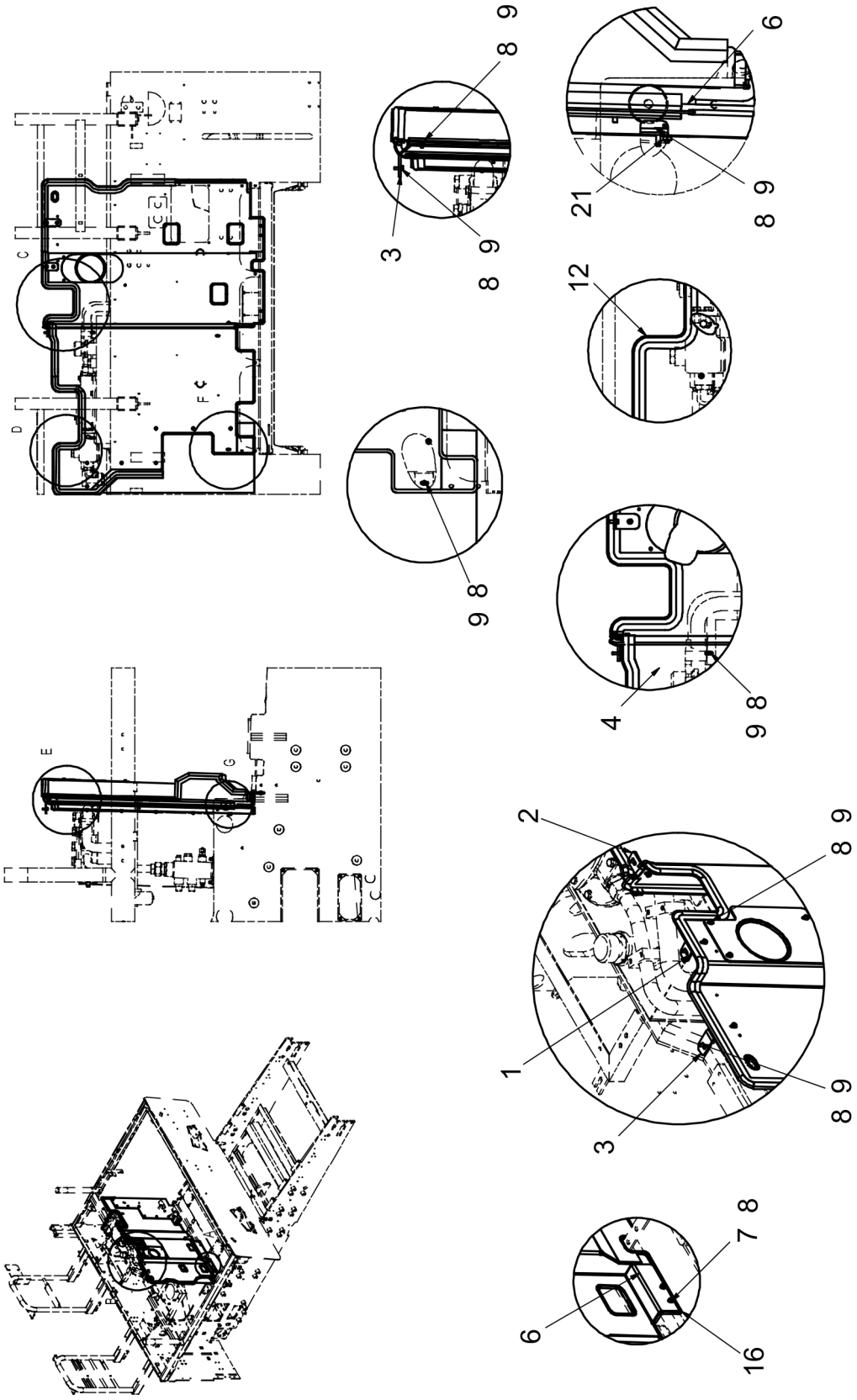
C
D
F
E
G
C
3
8 9
8 9
21
6
8 9
12
9 8
4
9 8
2
8 9
1
3
8 9
6
7 8
16

This page intentionally left blank

Platform, assembly Cooler shroud, assembly

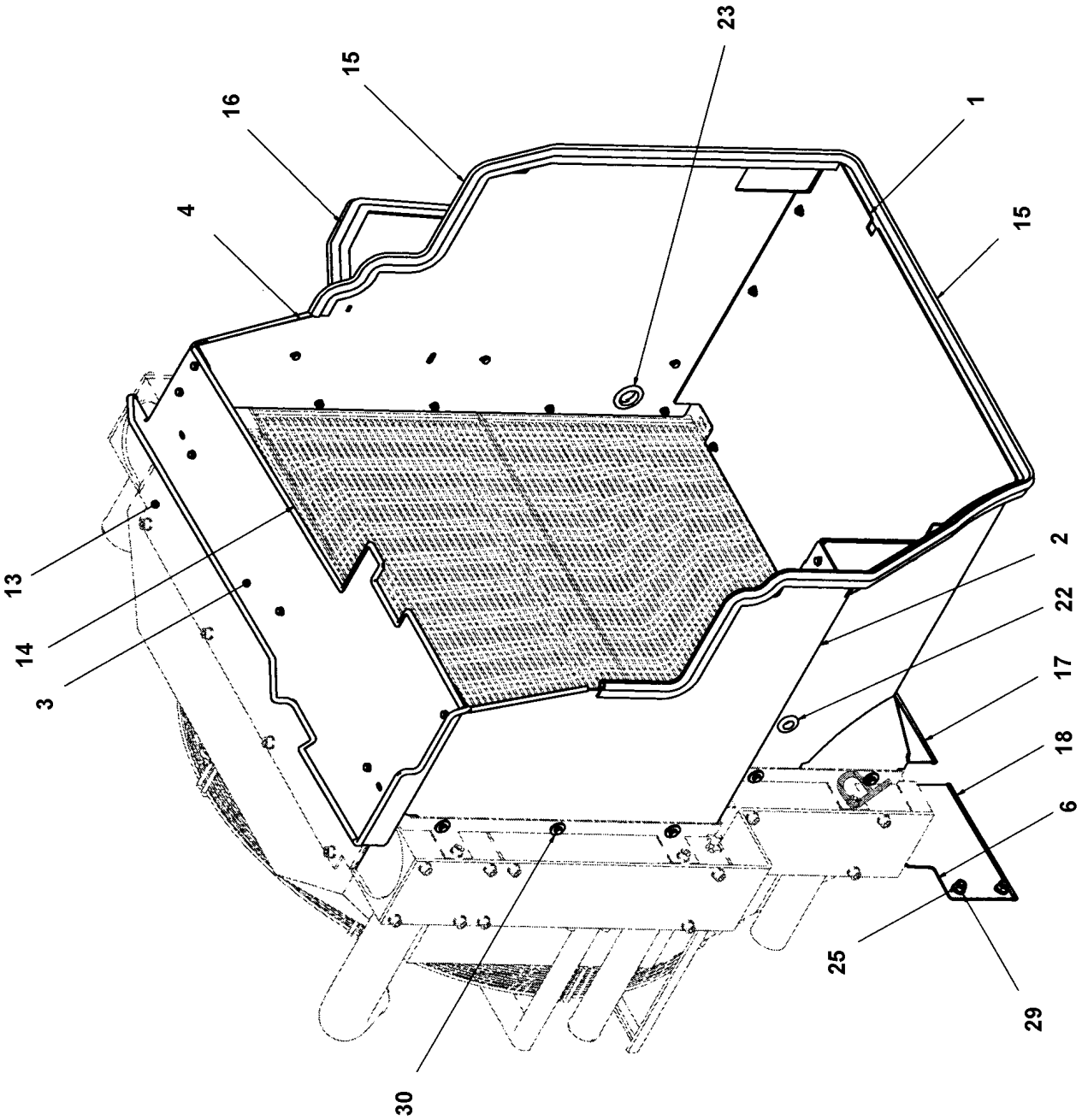

Item	Part No.	Name	Qty	L	SN INFO
1	4812223372	Shroud bottom	1		
2	4812223373	Shroud left	1		
3	4812223374	Shroud top	1		
4	4812223375	Shroud right	1		
5	4812223376	Shroud left corner	1		
6	4812223377	Shroud bottom cover	1		
8	4812223379	Cover plate	1		
9	4812223381	Right cover	1		
11	4812221425	Hard tubes beading	2		
13	4812222378	Top cooler shroud beading	1		
14	4812222380	Cooler top beading	1		
15	4812222376	Side cover plate beading	1		
16	4812222379	Side cooler plate beading	1		
17	4812222387	Cooler middle beading	1		
18	4812222388	Cooler plate beading	1		
22	4812221352	Grommet, 0.6875'	2		
23	4812222366	Grommet, 1.25'	1		
25	0291118549	Hexagon nut	4		
26	0301232100	Washer DIN125	57		
27	0147124703	Screw M6 x 20	32		
28	5730015118	Hexagon nut	25		
29	D939776115	Washer	4		
30	4812224029	Spacer	16		
31	D717909507	Grommet, rubber 1.25 DIA	2		

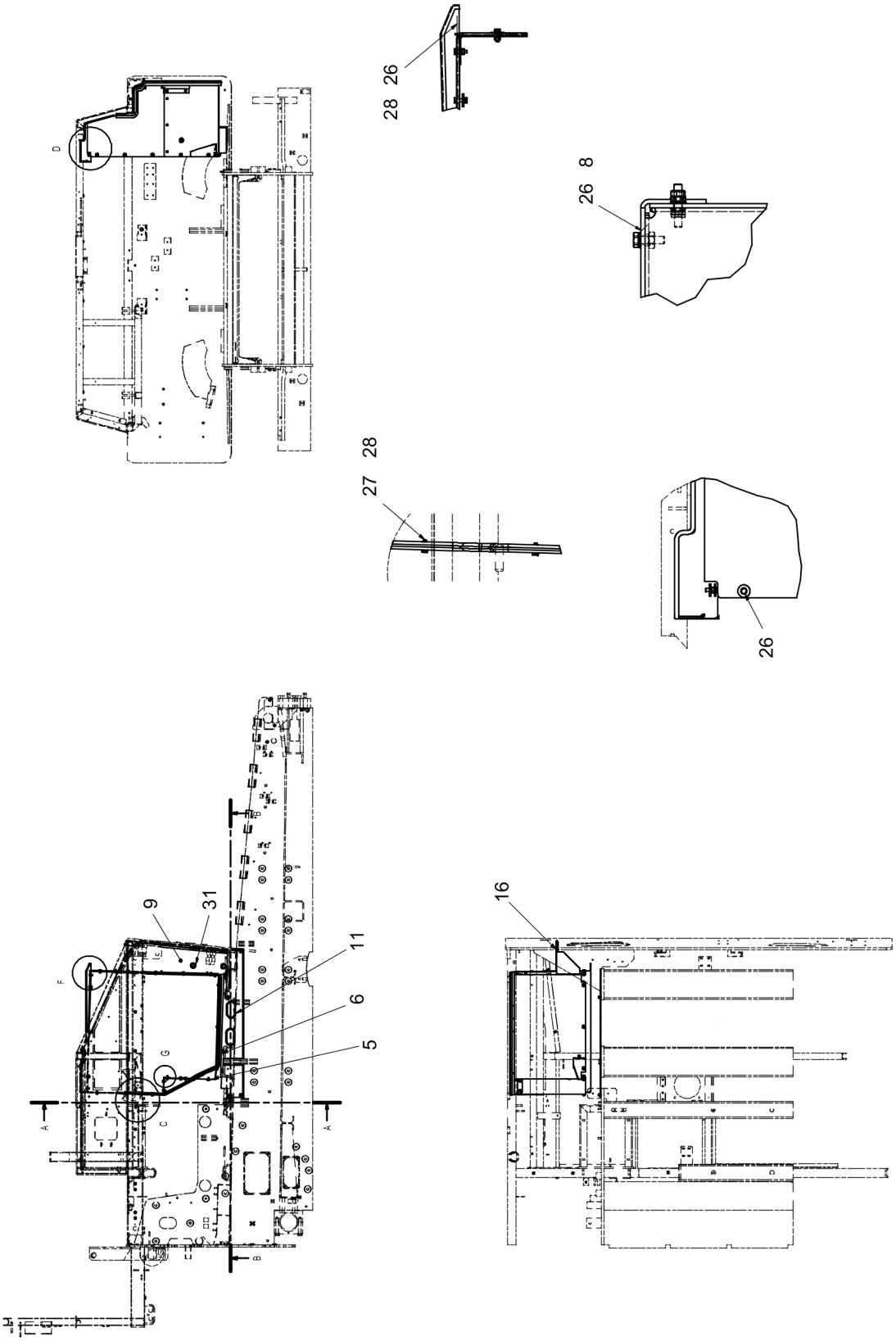
26
28
8
26
28
27
26
9
31
11
6
5
16

This page intentionally left blank

Platform, assembly Anti slip tape, assembly

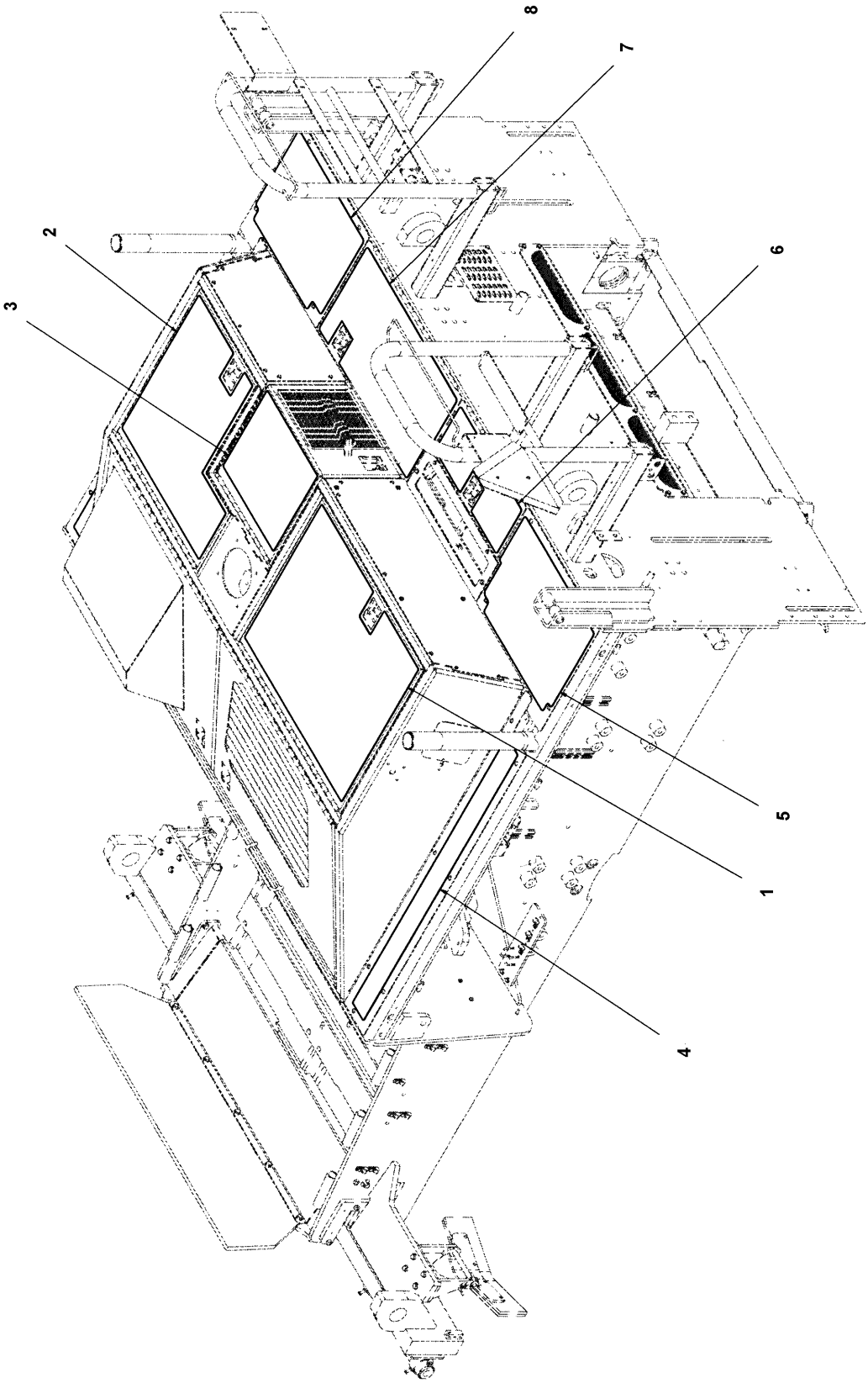

Item	Part No.	Name	Qty	L	SN INFO
1	4812222382	Anti-slip tape, left hood cover	1		
2	4812222383	Anti-slip tape, right hood cover	1		
3	4812222384	Anti-slip tape, air intake cover	1		
4	4812222385	Anti-slip tape, side walk	2		
5	4812222386	Anti-slip tape, rear walk	1		
6	4812222390	Anti-slip tape, rear walk	1		
7	4812222391	Anti-slip tape, rear walk	1		
8	4812222392	Anti-slip tape, rear walk	1		

Platform, assembly Door assembly

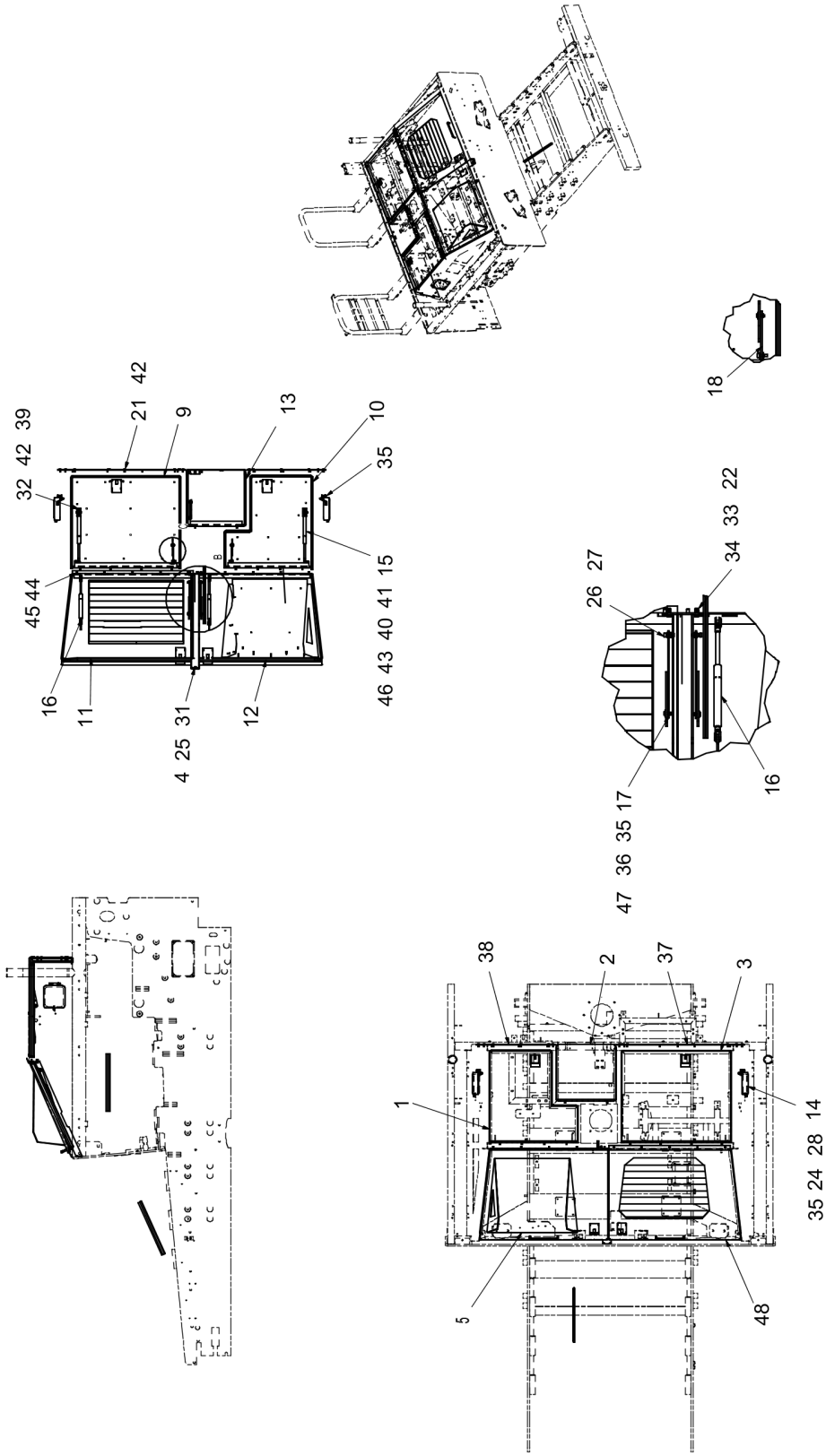

Item	Part No.	Name	Qty	L	SN INFO
1	4812223454	Hood cover, right	1		
2	4812223455	Air intake cover	1		
3	4812223456	Hood cover, left	1		
4	4812223457	Support, hood frame	1		
5	4812223458	Front door, right	1		
9	4812222215	Top door left beading	1		
10	4812222216	Top door right beading	1		
11	4812222217	Front door left beading	1		
12	4812222218	Front door right beading	1		
13	4812222219	Air intake door beading	2		
14	4812223462	Fuel door	2		
15	4812223960	Gas spring-700N	2		
16	4812223961	Gas spring-2500N	2		
17	4812223559	Plate, door stop	2		
18	4812223217	Plate, door stop	3		
21	0147124703	Screw M6 x 20	14		
22	4749901806	Washer	4		
24	0301233500	Plain washer(A) 8.4 x 16 x 1.6	8		
25	4749901807	Washer	1		
26	4812223244	Hexagon socket head shoulder	5		
27	0301234400	Washer plain	10		
28	0291112854	Hexagon nut	4		
31	0291118549	Hexagon nut	1		
32	0215000620	Hexagon socket button head screw	4		
33	0147132503	Hex head screw	2		
34	0291111000	Nut DIN985	2		
35	4812223656	Hexagon socket head shoulder screws	9		
36	5730015118	Hexagon nut	5		
37	4812224089	Rear cover left	1		
38	4812224104	Rear cover right	1		
39	4812224288	Bracket, gas spring	2		
40	4812224289	Pin, gas spring	2		
41	4812224290	Split pin	2		
42	0301232100	Washer DIN125	18		
43	D936870016	Washer	1		
44	D939776115	Washer	20		
45	0147136003	Hexagon bolt	20		

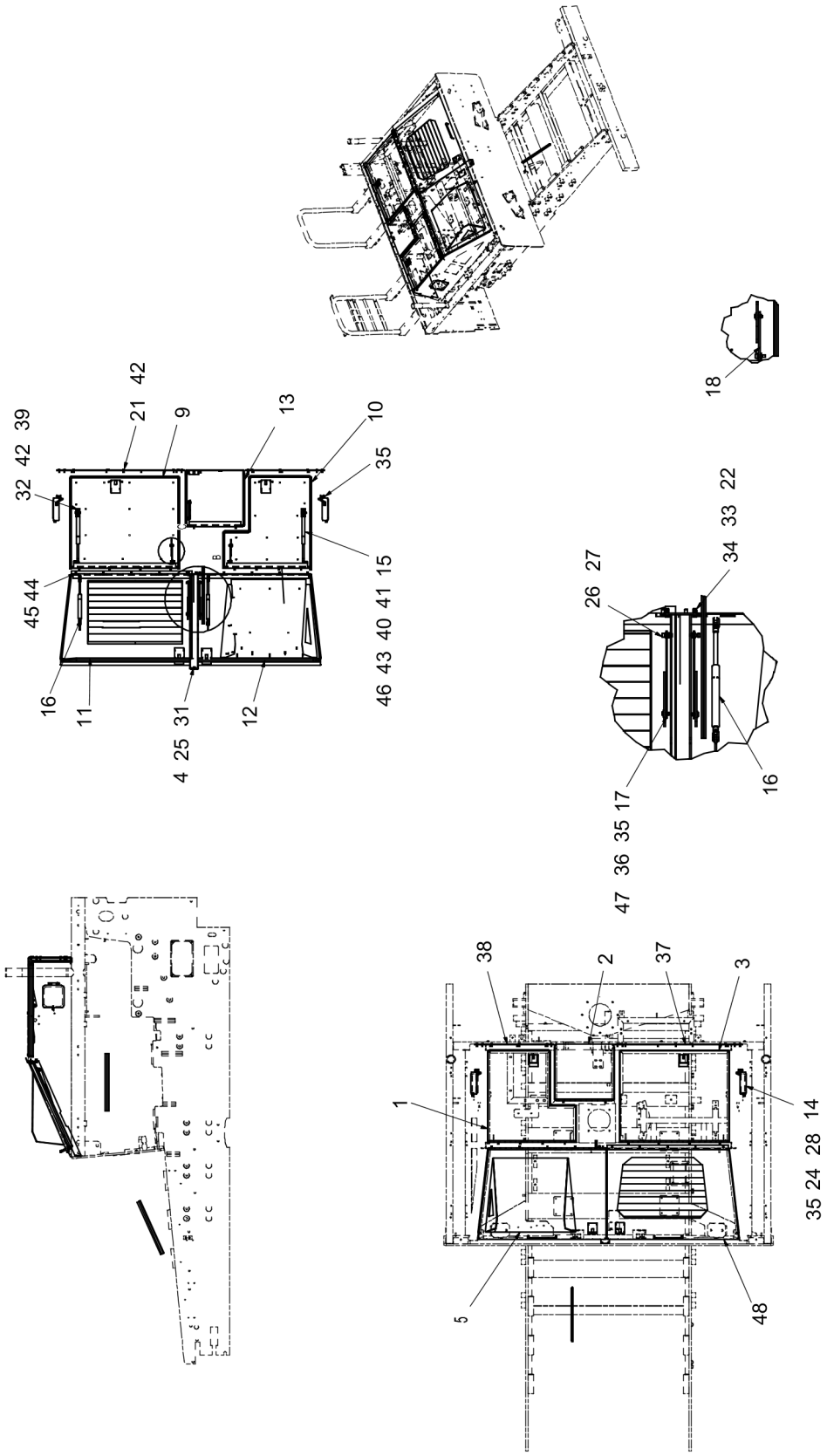
39
42
32
44
45
16
11
4
25
31
12
46
43
40
41
15
35
10
13
9
21
42
18
22
33
34
27
26
16
17
35
36
47
1
5
38
2
37
3
14
28
24
35
48

Item	Part No.	Name	Qty	L	SN INFO
46	0261109954	Hexagon nut	2		
47	D939570014	Washer	5		
48	4812247191	Weldment, front door, LH	1		

Platform, assembly Foam complete, assembly

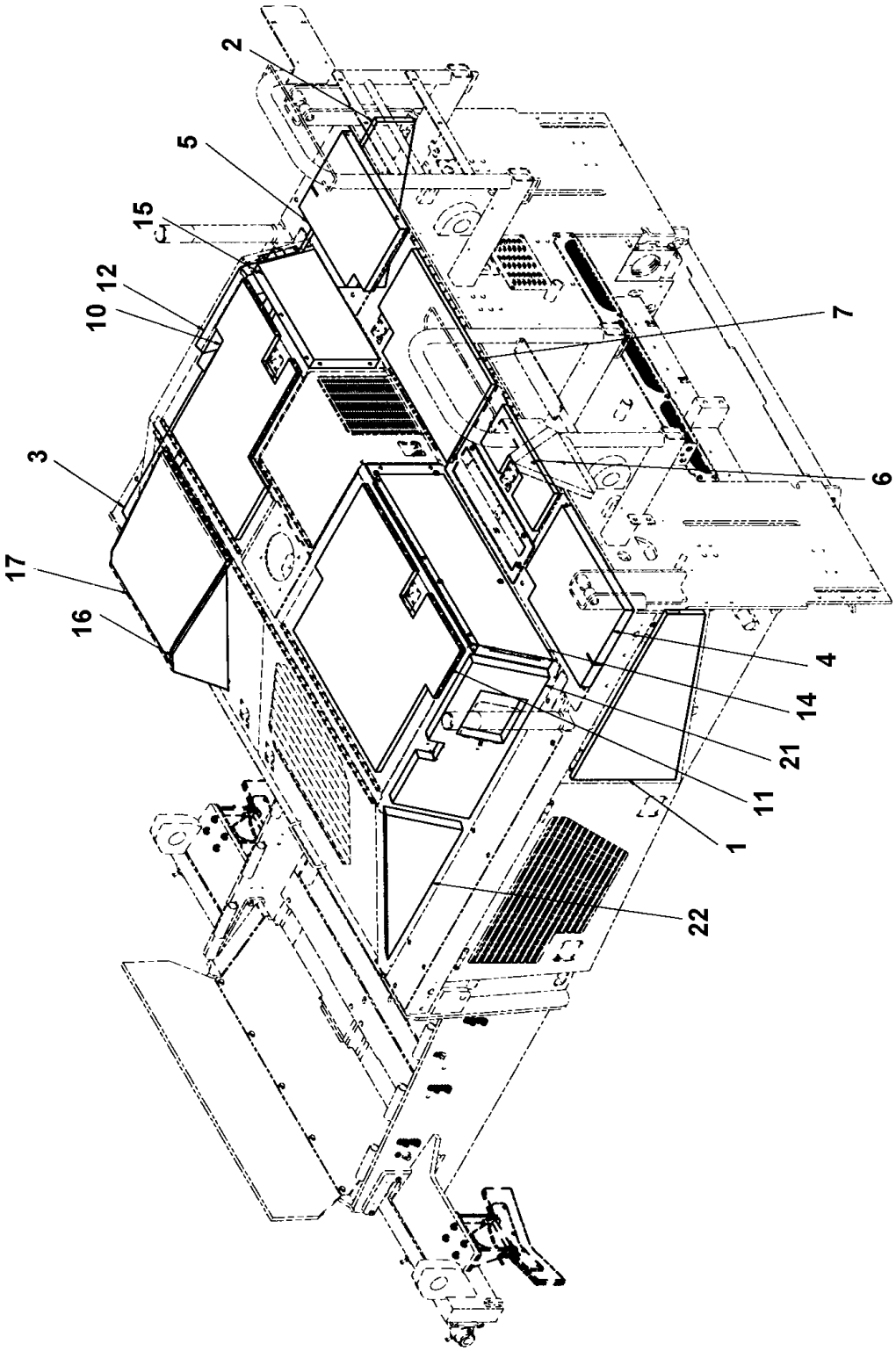

Item	Part No.	Name	Qty	L	SN INFO
1	4812221024	Insulation pad, left side panel	1		
2	4812221025	Insulation pad, right side panel	1		
3	4812221166	Insulation pad, footwell side extension	1		
4	4812221168	Insulation pad, footwell side extension	1		
5	4812221171	Insulation pad, footwell, left door	1		
6	4812221172	Insulation pad, footwell, middle door	1		
7	4812221173	Insulation pad, footwell, right door	1		
10	4812221177	Insulation pad, hood cover right	1		
11	4812221178	Insulation pad, hood cover left	1		
12	4812221179	Insulation pad, hood side cover right	1		
14	4812221181	Insulation pad, rear cover left	1		
15	4812221182	Insulation pad, rear cover right	1		
16	4812221225	Insulation pad, front door, right	1		
17	4812221226	Insulation pad, front door, right	1		
21	4812221232	Insulation pad, hood side cover left	1		
22	4812221364	Insulation pad, hood side cover left	1		

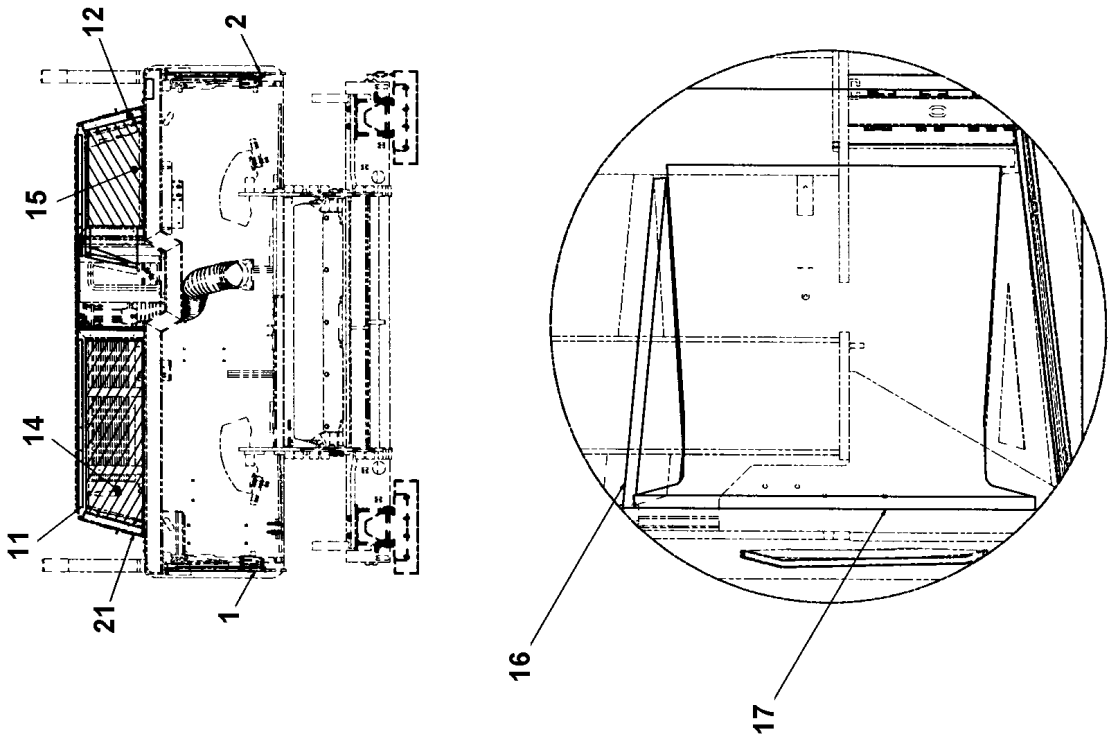
12
2
15
14
11
21
1
16
17

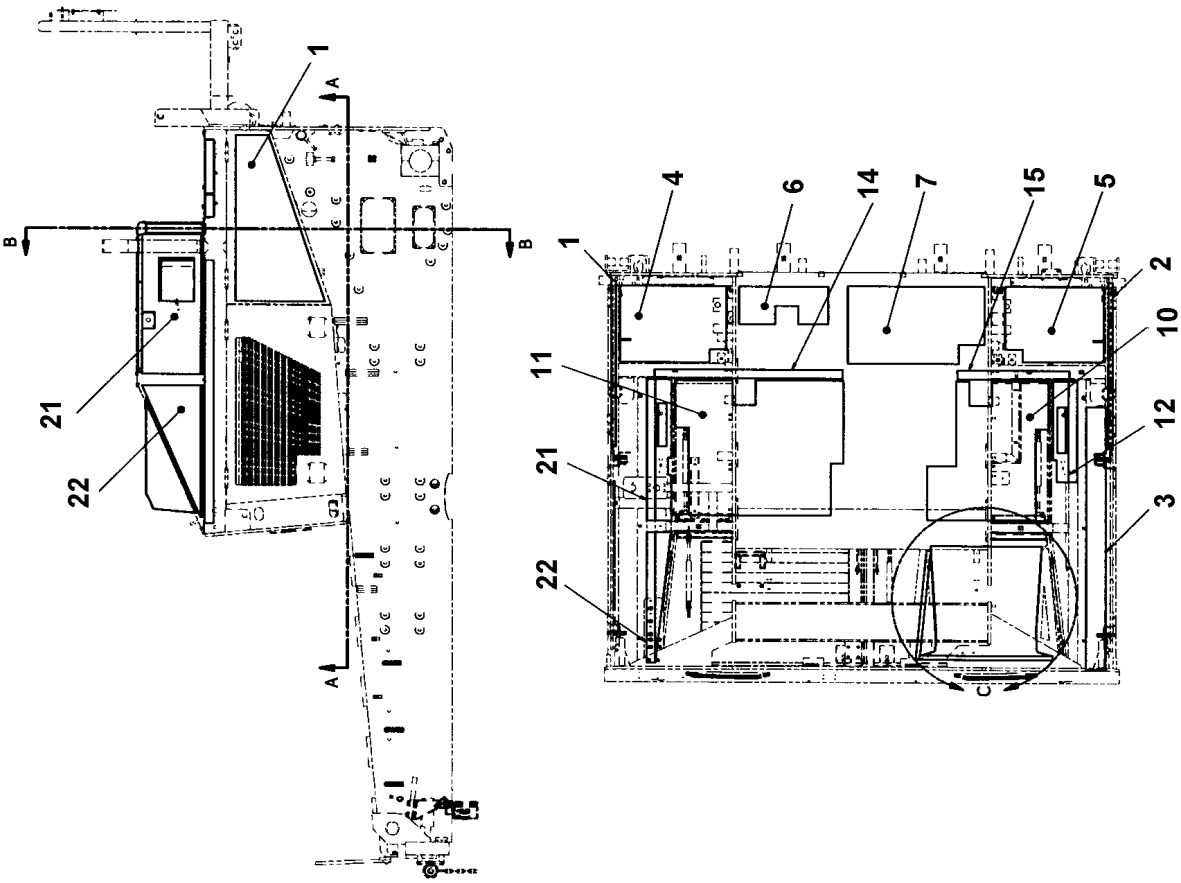
1
A
B
B
21
22
A
1
4
6
14
7
15
5
2
10
11
12
21
3
22
C

This page intentionally left blank

Platform, assembly Seat lock, assembly

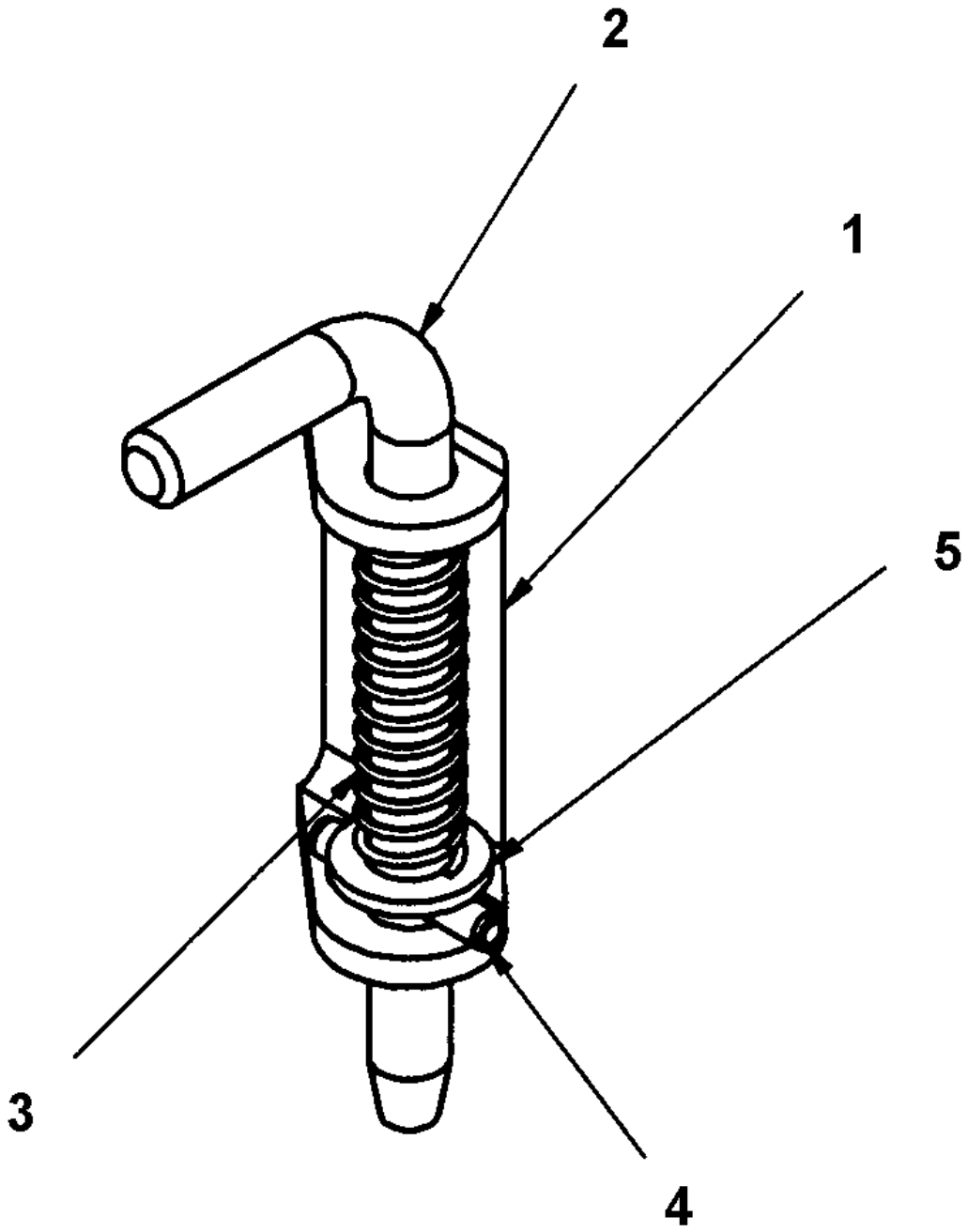

Item	Part No.	Name	Qty	L	SN INFO
1		Seat lock bracket	1		
2		Plunger, seat lock	1		
3		Compression spring	1		
4		Dowel pin	1		
5		Plain washer(A) 13 x 24 x 2.5	1		

Platform, assembly Hood frame, assembly

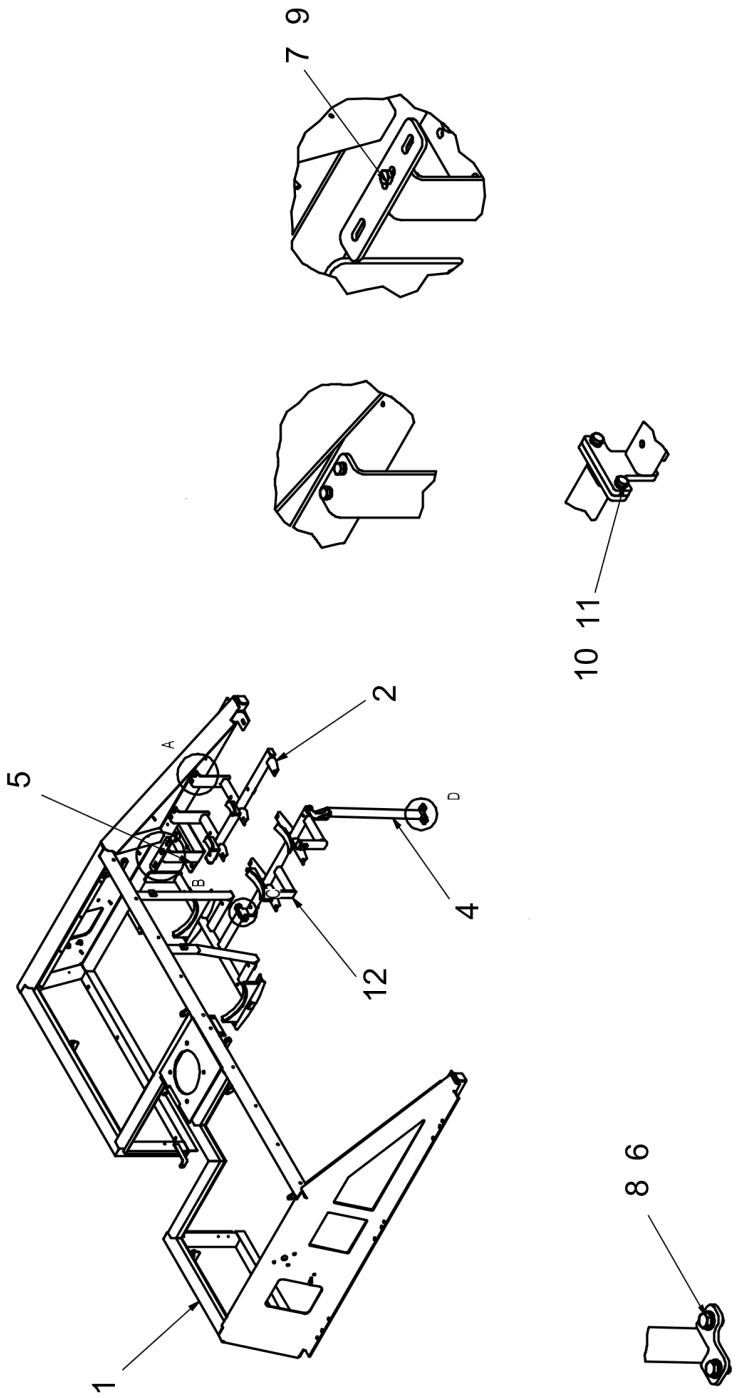

Item	Part No.	Name	Qty	L	SN INFO
1	4812247179	Hood frame weldment	1		
2	4812247197	DRT mount	1		
4	4812243153	DOC mount	1		
5	4812247182	Hose tray weldment	1		
6	D939776115	Washer	5		
7	0147196264	Hex. head screw	2		
8	0147136003	Hexagon bolt	3		
9	0291118549	Hexagon nut	1		
10	4749901806	Washer	6		
11	0147132303	Hex head screw M8 x 20	6		
12	4812247195	DOC mount	1		

Platform, assembly Storage box

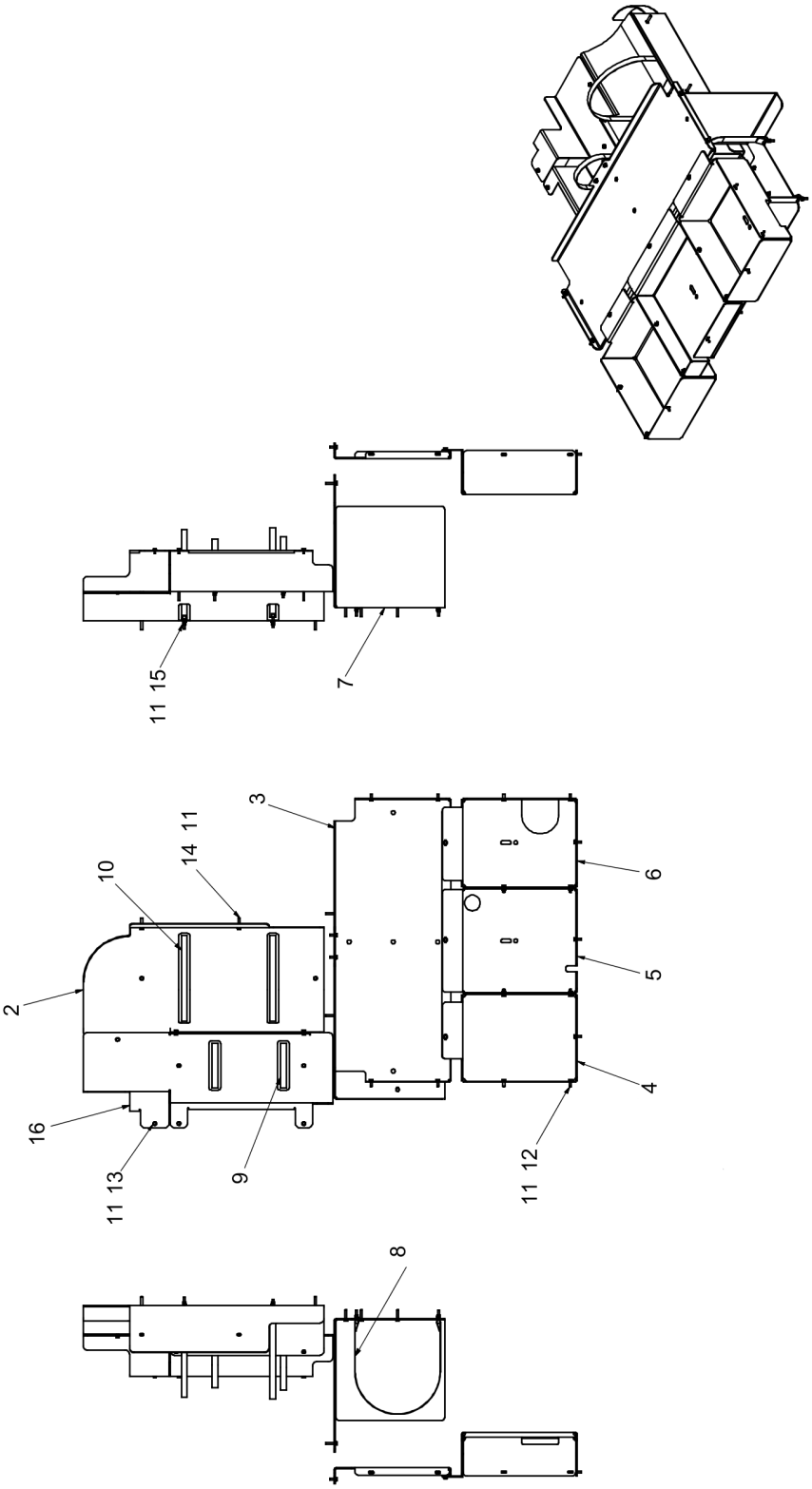

Item	Part No.	Name	Qty	L	SN INFO
2	4812243371	Insulation plate	1		
3	4812243179	Heat shield cover	1		
4	4812223863	Storge box, battery	1		
5	4812223862	Storage box	1		
6	4812224247	Storage box, battery	1		
7	4812247190	SCR insulation plate	1		
8	4812243375	Strap	2		
9	4812243377	Strap	2		
10	4812243378	Strap	2		
11	0301232100	Washer DIN125	50		
12	0147124703	Screw M6 x 20	20		
13	D938155540	Screw	6		
14	0147125112	Hex. head screw	12		
15	0291112854	Hexagon nut	12		
16	4812247198	DRT insulation plate	1		

F1000T/W engine system F1000T T4f engine system

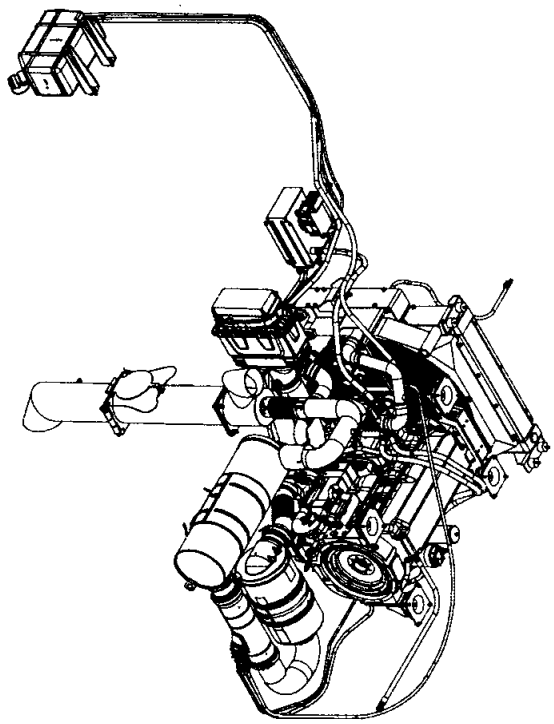

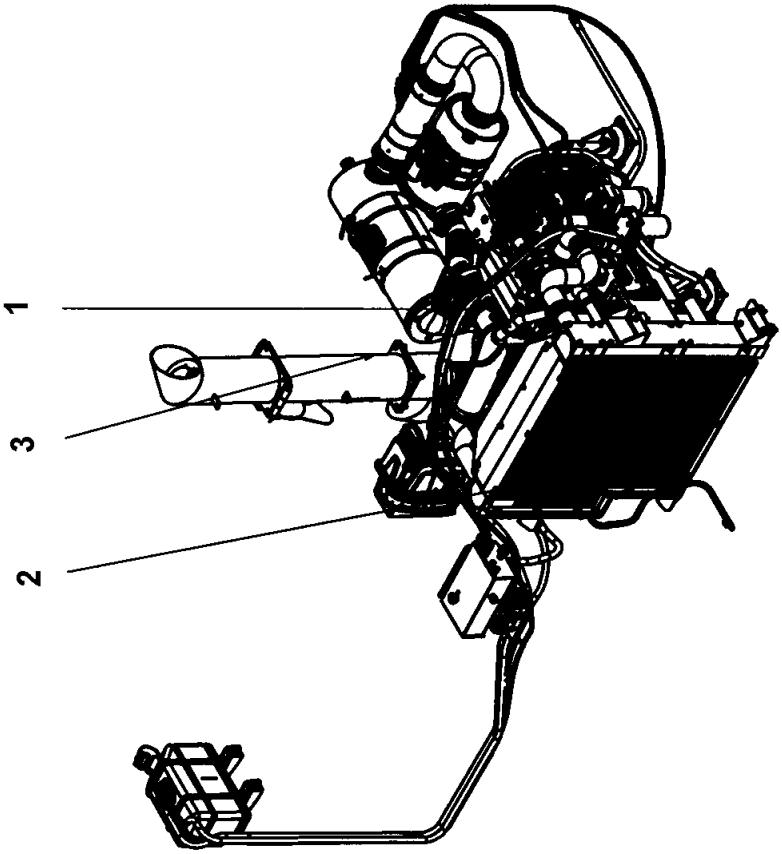

Item	Part No.	Name	Qty	L	SN INFO
1		Engine system	1		
2		Cooling system	1		
3		Exhaust system	1		

Engine system Engine system

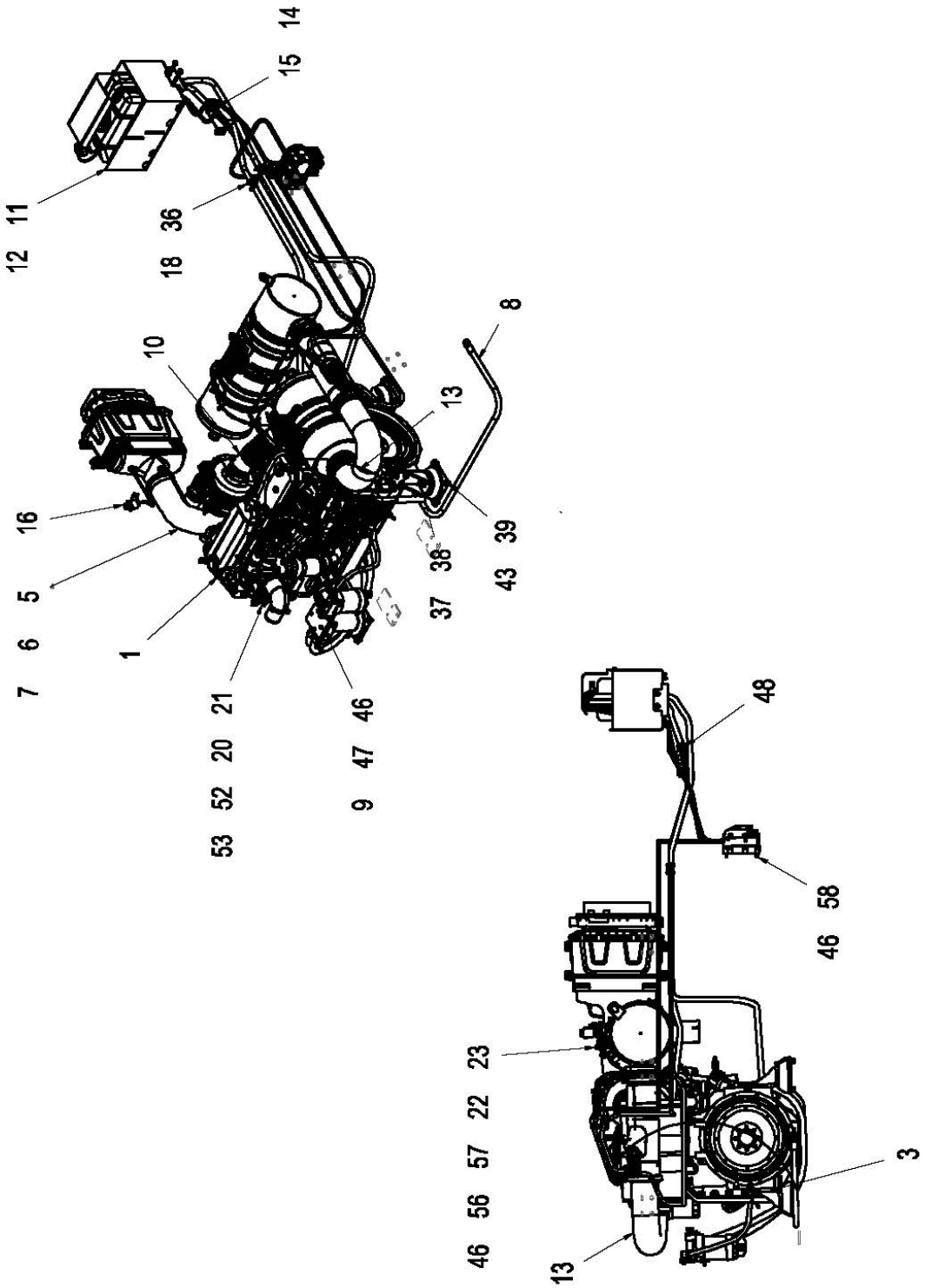

Item	Part No.	Name	Qty	L	SN INFO
1		Engine part	1		
2	4812223444	Engine mounting bracket, front	1		
3	4812223440	Engine mounting bracket, rear	2		
4	4812220644	Engine mounting isolator	4		
5	4812220508	Hose, air intake	1		
6	4812200433	Hose clamp, 5 1/4'	1		
7	D717082009	Clamp, 4 1/2'	1		
8		Hose, engine oil drain	1		
9	4812247676	Bracket	1		
10	4812243539	Bellows	1		
11		Mounting bracket assembly	1		
12	4812243136	DEF tank	1		
13	4812243544	Elbow	1		
14	4812247677	Valve bracket	1		
15	4812243459	Coolant flow valve	1		
16	D717082016	Kit, restriction indicator remote mount	1		
17	4812222060	Exhaust gasket	1		
18	4812243524	T-junction	2		
19	4812243546	Straight joint	1		
20	4812243573	Plate	1		
21	D717101014	Relay, intake air heater, engine controls	1		
22	4812246882	Plate	2		
23	4812221656	P clamp	2		
24	4812248242	Pipeline	2		
26	4812248243	Dosing pressure line	1		
27	4812243561	Coolant hose	1		
01	4812243557	Coolant hose	1		
28	4812243565	Coolant hose	1		
01	4812243557	Coolant hose	1		
29	4812243560	Coolant hose	1		
01	4812243557	Coolant hose	1		
30	4812243564	Coolant hose	1		
01	4812243557	Coolant hose	1		
31	4812243556	Coolant hose	1		
32	4812243567	Coolant hose	1		
01	4812243566	Coolant hose	1		
33	4812243568	Coolant hose	1		

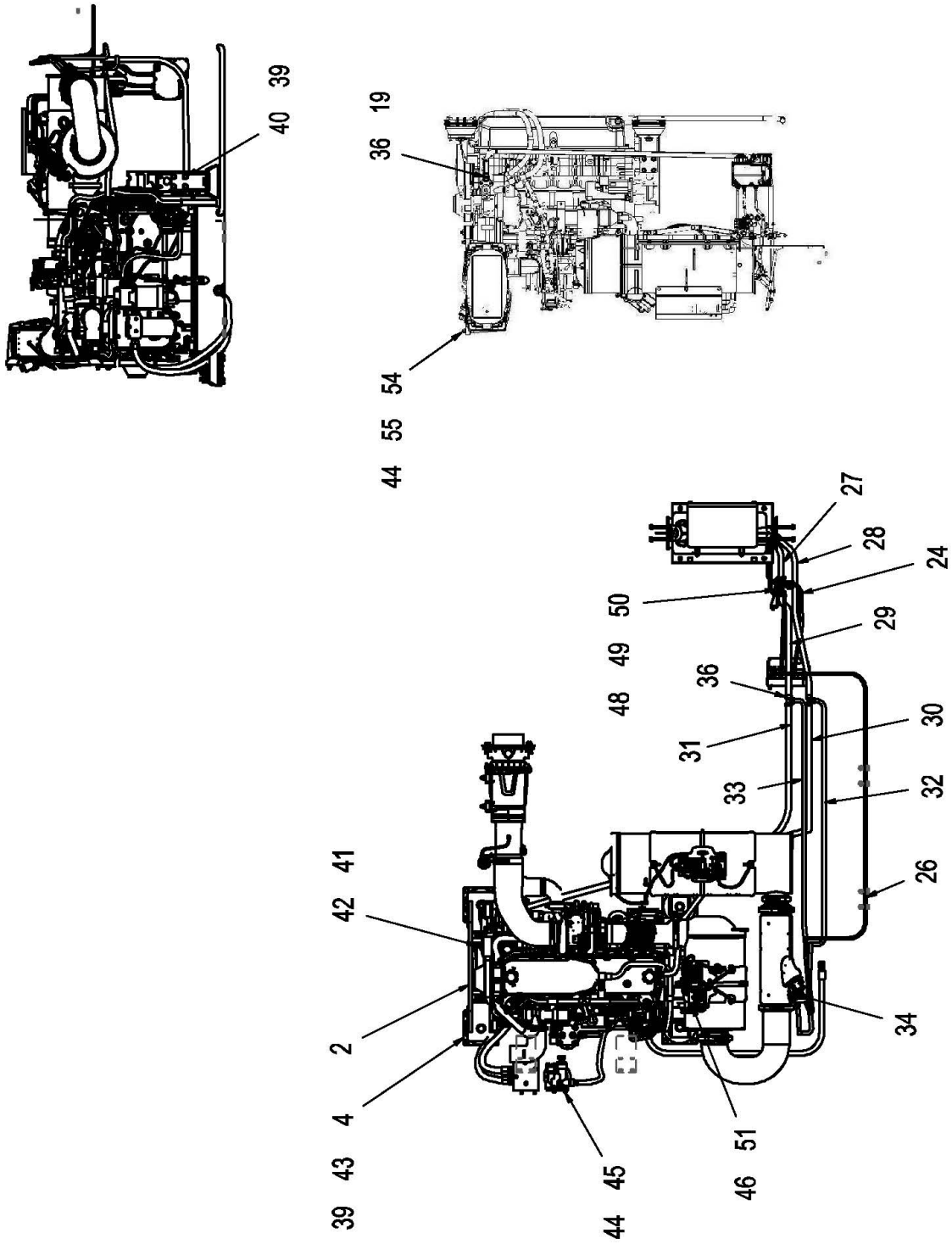
39
40
19
36
54
55
44
27
28
24
50
29
49
36
48
30
31
33
32
41
42
26
2
34
4
43
39
45
44
51
46

Item	Part No.	Name	Qty	L	SN INFO
01	4812243566	Coolant hose	1		
34	4812119085	Quick coupling	2		
35	4812248341	Hose clamp	4		
36	4812248342	Hose clamp	10		
37	D939776129	Locking washer	4		
38	D717800449	Screw, M20	4		
39	D939776117	Flat washer	24		
40	D717800470	Screw, M12	8		
41	D939515032	Washer	4		
42	4812220896	Cap screw, 7/16'	4		
43	4812223500	Bolt	16		
44	D939776115	Washer	14		
45	4812223284	Hexagon bolt	4		
46	4749901806	Washer	13		
47	D717800442	Screw, M8	4		
48	0211125003	Hexagon socket head cap screw	4		
49	4749901860	Washer	8		
50	5730015118	Hexagon nut	6		
51	0147132203	Hex head screw M8 x 16	4		
52	D717800505	Screw, M10	2		
53	0147124703	Screw M6 x 20	2		
54	0147196394	Hexagon head screw	4		
55	0291118549	Hexagon nut	4		
56	0266211000	Nut DIN934	2		
57	0147132303	Hex head screw M8 x 20	2		
58	D938165668	Hexagon screw	3		

Comments for Page: Engine system

(L)OCAL REMARK

This page age apply to SN: 10002124V0C003439; SN: 10002134CEC004555

Engine system 4812243085 Engine system

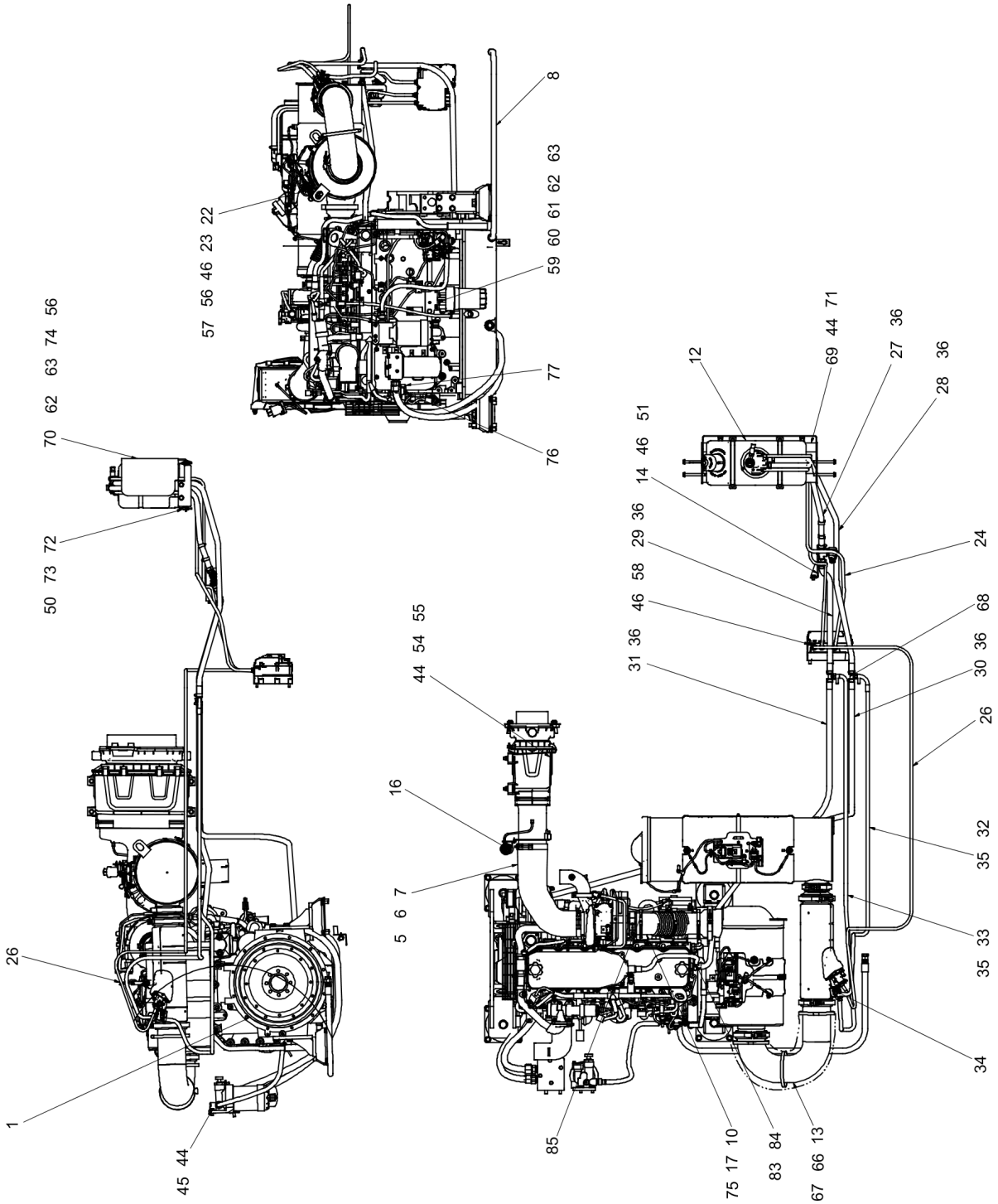

Item	Part No.	Name	Qty	L	SN INFO
1	4812243056	Engine part	1		
2	4812223444	Engine mounting bracket, front	1		
3	4812223440	Engine mounting bracket, rear	2		
4	4812220644	Engine mounting isolator	4		
5	4812220508	Hose, air intake	1		
6	4812200433	Hose clamp, 5 1/4'	1		
7	D717082009	Clamp, 4 1/2'	1		
8	4812246888	Hose, engine oil drain	1		
9	4812247676	Bracket	1		
10	4812243539	Bellows	1		
12	4812243136	DEF tank	1		
13	4812243544	Elbow	1		
14	4812247677	Valve bracket	1		
16	D717082016	Kit, restriction indicator remote mount	1		
17	4812222060	Exhaust gasket	1		
19	4812243546	Straight joint	1		
20	4812243573	Plate	1		
22	4812246882	Plate	2		
23	4812221656	P clamp	2		
24	4812248242	Pipeline	2		
26	4812248243	Dosing pressure line	1		
27		Coolant hose	1	A	
28		Coolant hose	1	A	
29		Coolant hose	1	A	
30		Coolant hose	1	A	
31		Coolant hose	1	A	
32		Coolant hose	1	B	
33		Coolant hose	1	B	
34	4812119085	Quick coupling	2		
35	4812248341	Hose clamp	4		
36	4812248342	Hose clamp	14		
37	D939776129	Locking washer	4		
38	D717800449	Screw, M20	4		
39	D939776117	Flat washer	24		
40	D717800470	Screw, M12	8		
41	D939515032	Washer	4		
42	4812220896	Cap screw, 7/16'	4		

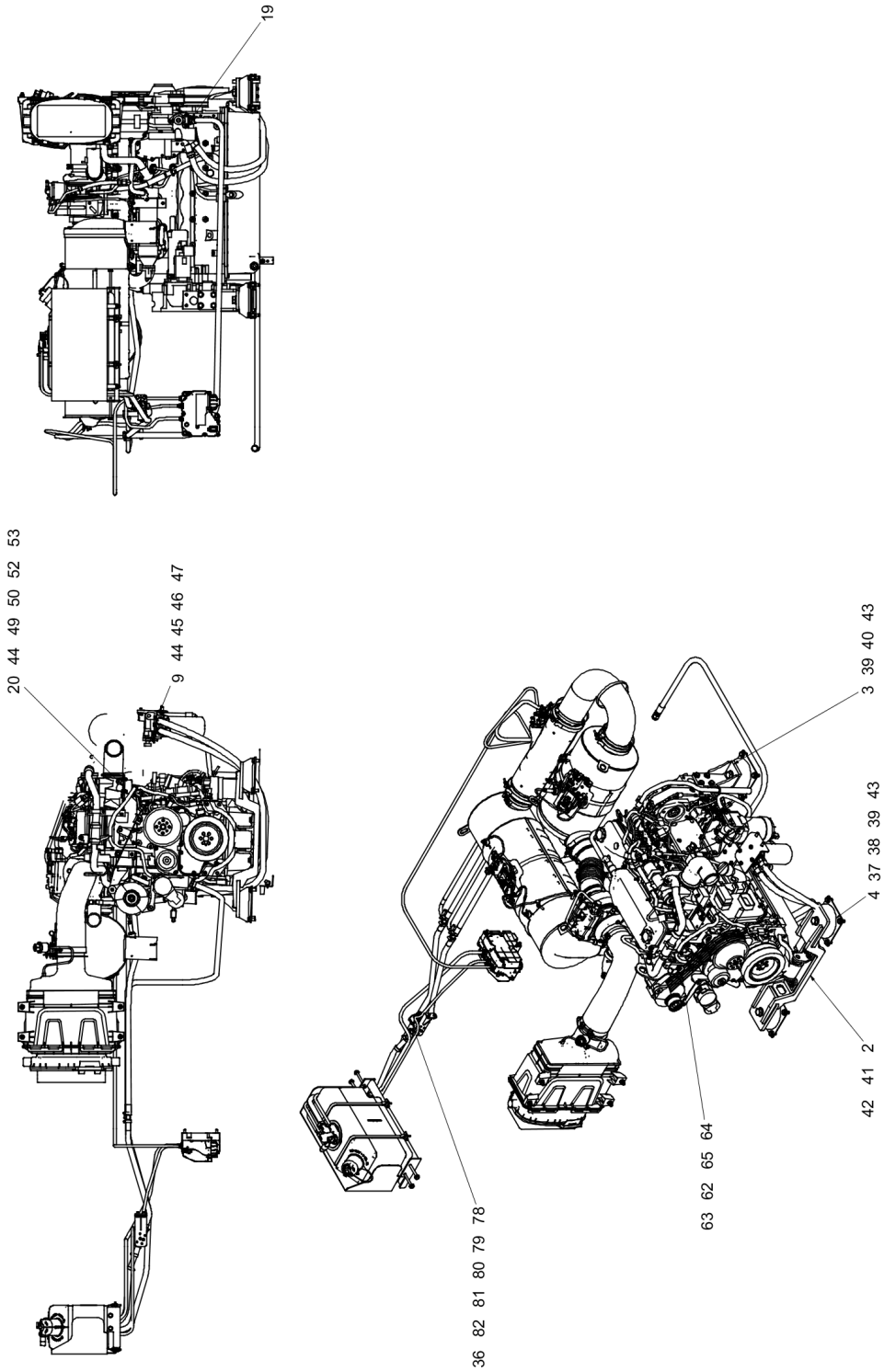
19
20 44 49 50 52 53
9 44 45 46 47
36 82 81 80 79 78
63 62 65 64
42 41 2
4 37 38 39 43
3 39 40 43

Item	Part No.	Name	Qty	L	SN INFO
43	4812223500	Bolt	16		
44	D939776115	Washer	18		
45	4812223284	Hexagon bolt	4		
46	4749901806	Washer	13		
47	D717800442	Screw, M8	4		
49	4749901860	Washer	4		
50	5730015118	Hexagon nut	6		
51	0147132203	Hex head screw M8 x 16	4		
52	D717800505	Screw, M10	2		
53	0147124703	Screw M6 x 20	2		
54	0147196394	Hexagon head screw	4		
55	0291118549	Hexagon nut	4		
56	0266211000	Nut DIN934	4		
57	0147132303	Hex head screw M8 x 20	2		
58	D938165668	Hexagon screw	3		
59	4812249588	Plate, fuel filter	1		
60	0333310043	Schnorr-lock washer	2		
61	0147140103	Hex head screw M12 x 30	2		
62	0301233500	Plain washer(A) 8.4 x 16 x 1.6	9		
63	0147132503	Hex head screw	9		
64	4812248799	Belt cover	1		
65	0300013045	Flat washer	1		
66	4812247598	Heat resistant bandage 10 meter	0.33		
67	D717091021	Clamp, hose	3		
68	4812249580	T-junction	2		
69	4812249355	Def holder	1		
70	4812249352	Sun shield	1		
71	0147137603	Hexagon head screw	4		
72	4812247652	Steel strap	2		
73	D939776111	Washer	4		
74	D939776113	Washer	2		
75	4812249575	Heat resistant bandage	1		
76	4812204299	Fitting	1		
77	4812204300	Fitting	1		
78	4812204357	Coolant flow valve	1		
79	0300013029	Flat washer	2		
80	0160605800	Slotted screw	2		

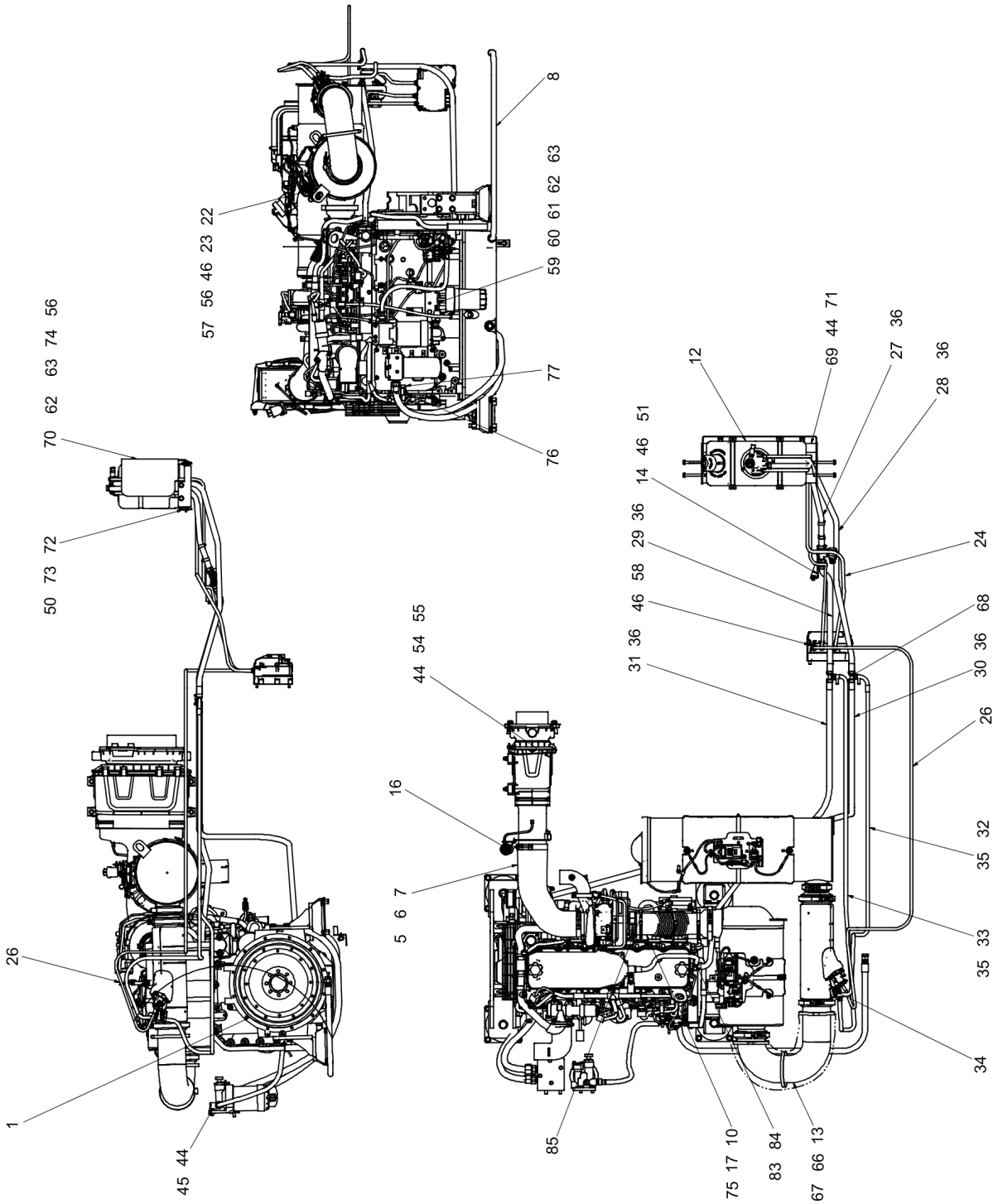
8
63
62
61
60
59
77
76
22
23
46
56
57
56
74
63
62
70
72
73
50
26
1
44
45
12
51
46
14
36
29
58
46
36
31
44
71
69
36
27
36
28
24
68
36
30
26
32
35
33
35
34
55
54
44
16
7
6
5
85
10
17
75
84
83
13
66
67

Item	Part No.	Name	Qty	L	SN INFO
81		Coolant hose, L=700mm	1	C	
82	4812204070	Coolant hose	2		
83	4812204532	Connector female	1		
84	4812204533	Coupling elbow hose	1		
85	4812204538	Hose clamp	3		

Comments for Page: 4812243085 Engine system

(L)OCAL REMARKS

A | 1. Material: Gummi EPDM(Std:DIN73411)

2. Dimention: ID=16mm, OD=24±1mm, tolerances valid for the length 0.5XD from end of the hose.

3. Temperature range: -40ºC till +130ºC

4. Other:Pressure resistance=2 bar at +130ºC, increase of tube areamax 15%, Min burst pressure=6bar

B | 1. Material: Gummi EPDM(Std:DIN73411)

2. Dimention: ID=10mm, OD=17±1mm

3. Temperature range: -40ºC till +130ºC

4. Other:Pressure resistance=2 bar at +130ºC, increase of tube areamax 15%, Min burst pressure=6bar

C | 1. Material: Gummi EPDM(Std:DIN73411)

2. Dimention:ID=14mm,OD=22±0.8mm,L=700mm

3. Temperature range:-40ºC till +130ºC

4. Pressure resistance=2 bar at +130ºC, increase of tube areamas 15%, Min burst pressure=6bar, tolerances valid for the length 0.5XD from end of the hose

(L)OCAL REMARK

This page apply to machine from SN: 10002134CFC005052

Engine part Engine part

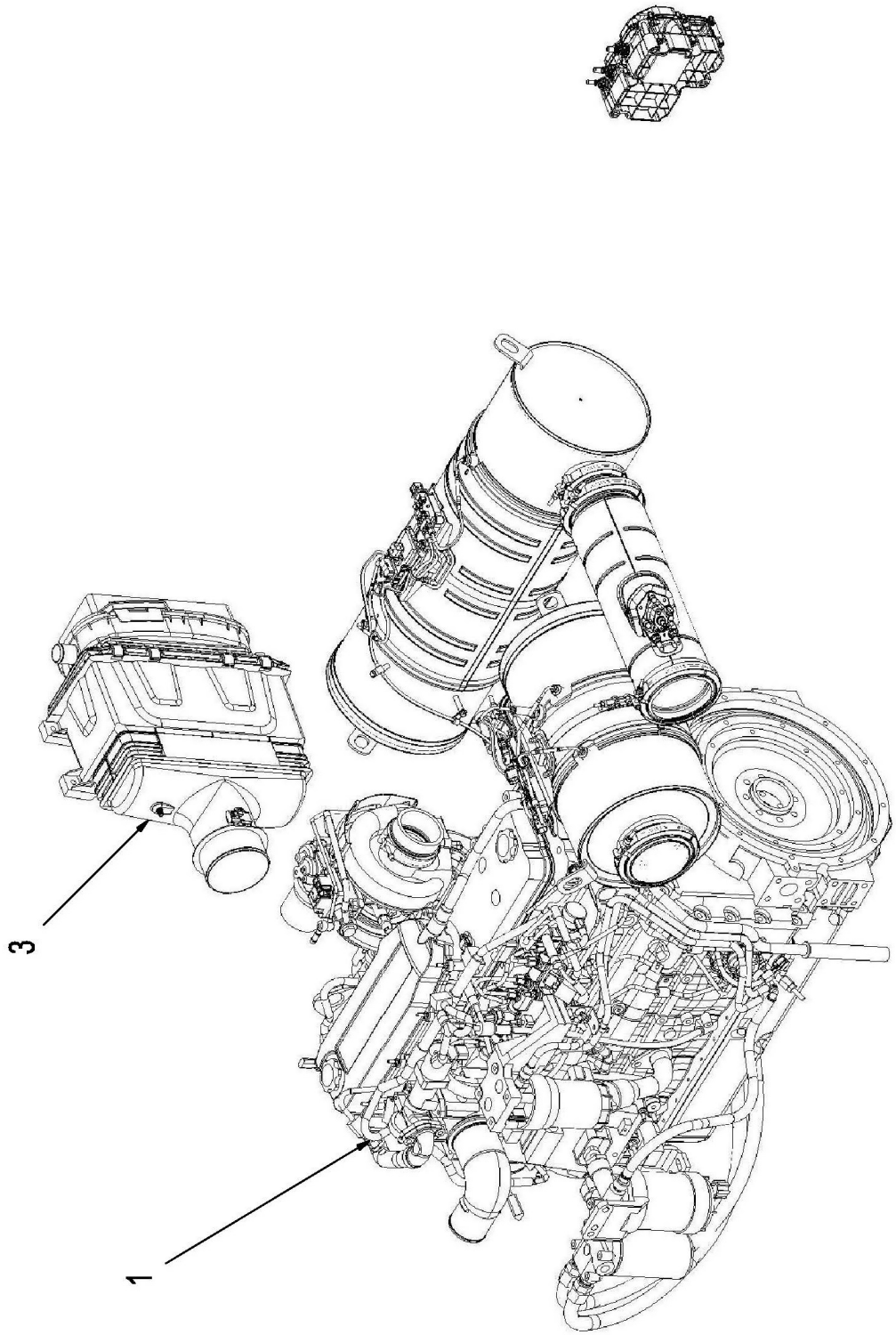

Item	Part No.	Name	Qty	L	SN INFO
1	4812242699	F1000W/T T4F engine	1		
2	4812242985	QSB6.7 after treatment assembly	1		
3	4812222043	Air cleaner assembly	1		

Engine part 4812242985 QSB6.7

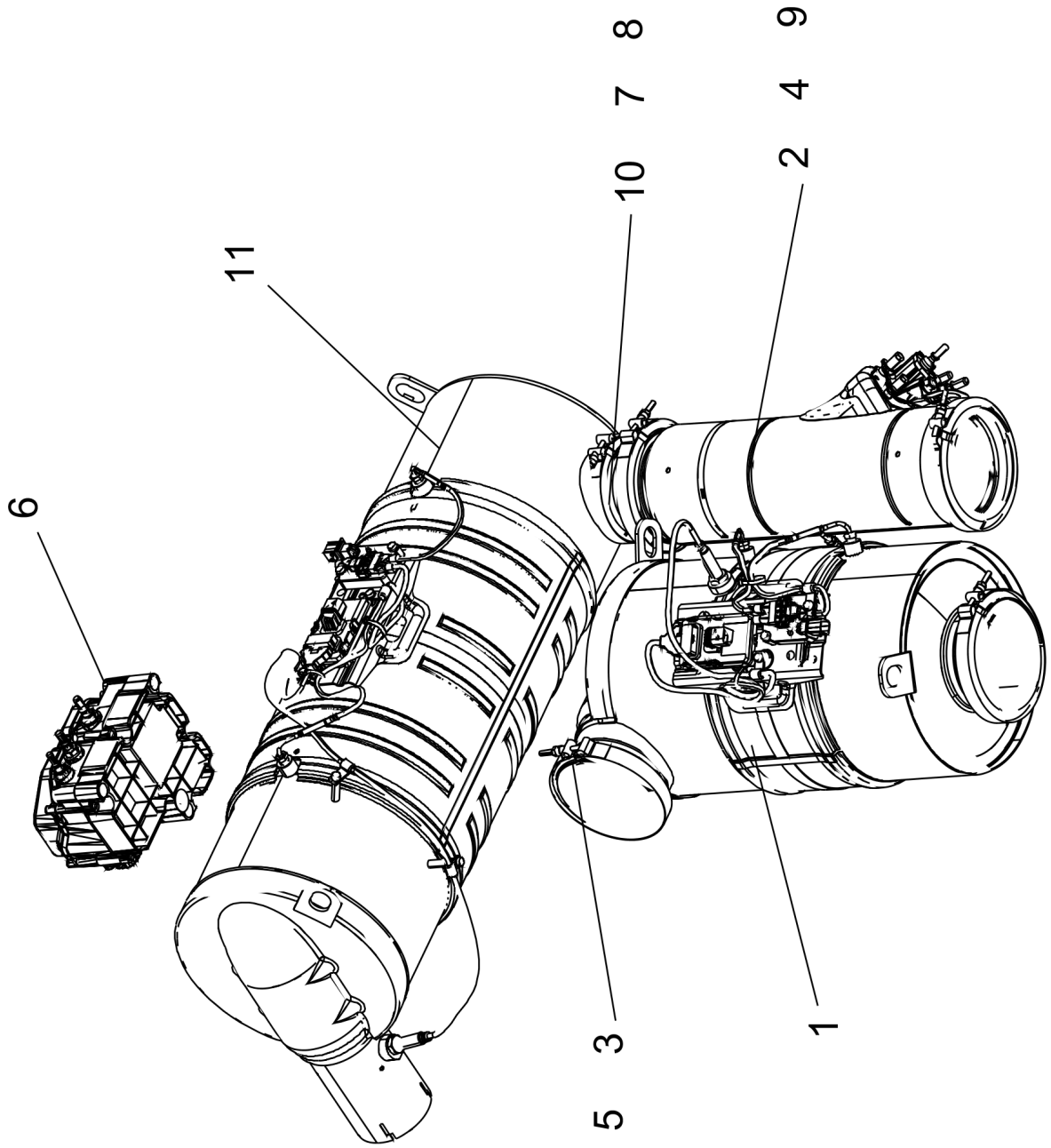

Item	Part No.	Name	Qty	L	SN INFO
1	4812243450	Device, aftertreatment	1		
2	4812242697	Muffler	1		
3	4812243451	Clamp	1		
4	4812243457	Clamp	3		
5	4812243452	Gasket	1		
6	4812242700	DEF supply module	1		
7	4812243454	Gasket	1		
8	4812243455	Clamp	1		
9	4812243456	Gasket	3		
10	4812247620	Reducers	1		
11	4812243549	Muffler	1		

Engine part 4812222043 Air cleaner

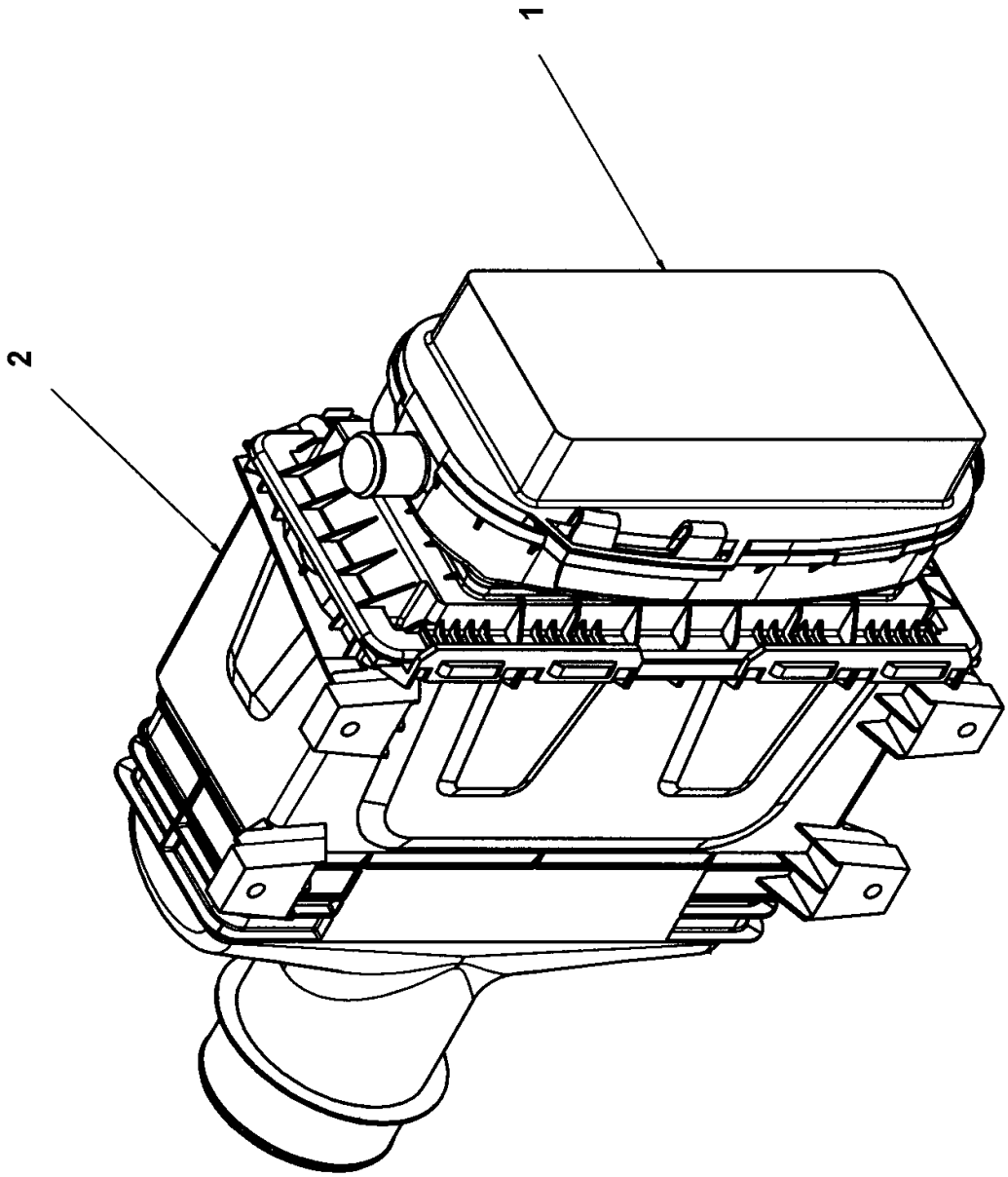

Item	Part No.	Name	Qty	L	SN INFO
1	4812220921	Airfilter main	1		
2	4812220922	Airfilter safety	1		

Engine system Hose, engine oil drain

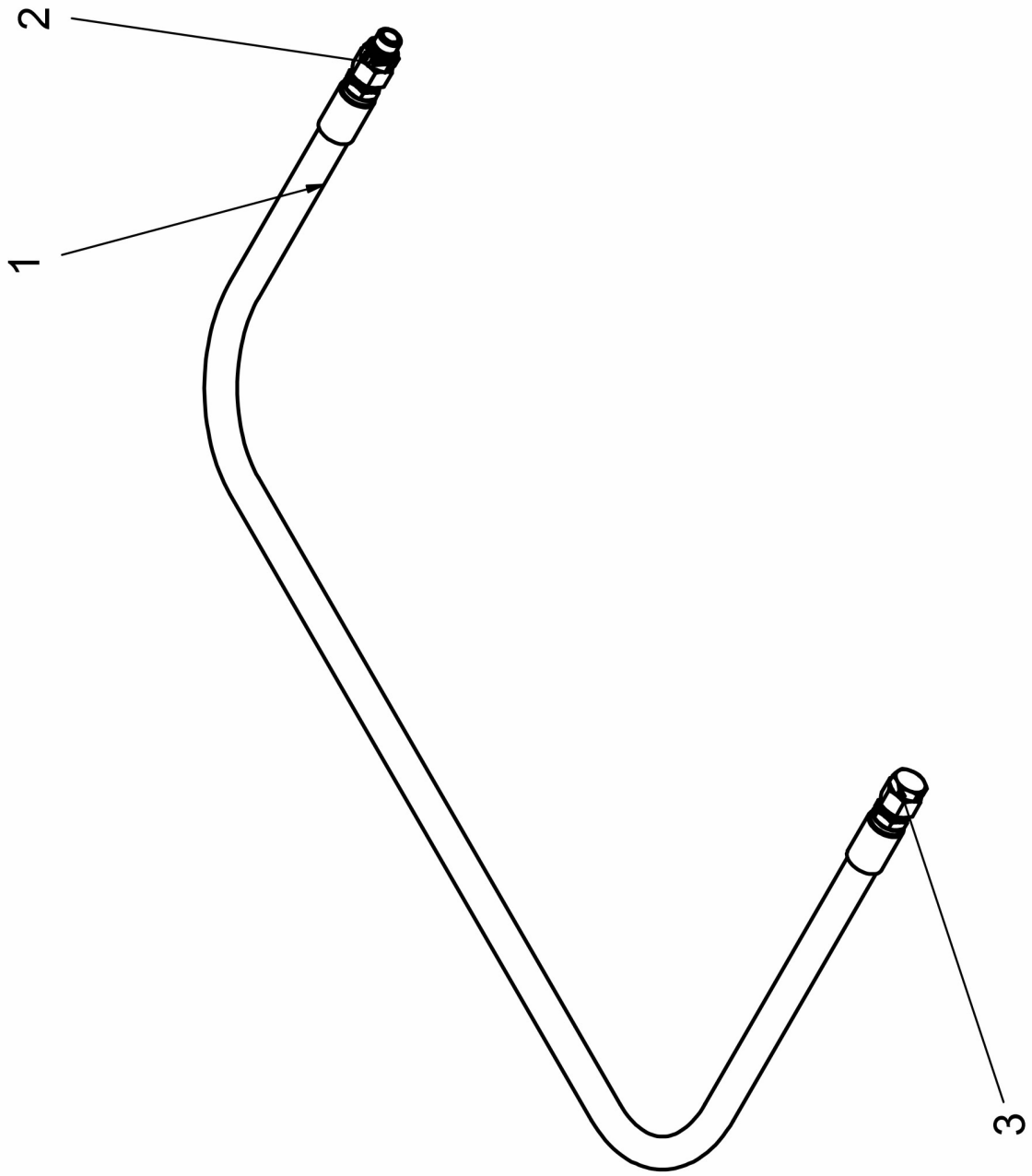

Item	Part No.	Name	Qty	L	SN INFO
1	4812246887	Engine oil drain hose	1		
2	4812224697	Fitting straight M18X1.5	1		
3	D717801877	Plug, 10	1		

Engine system Mounting Bracket Assembly

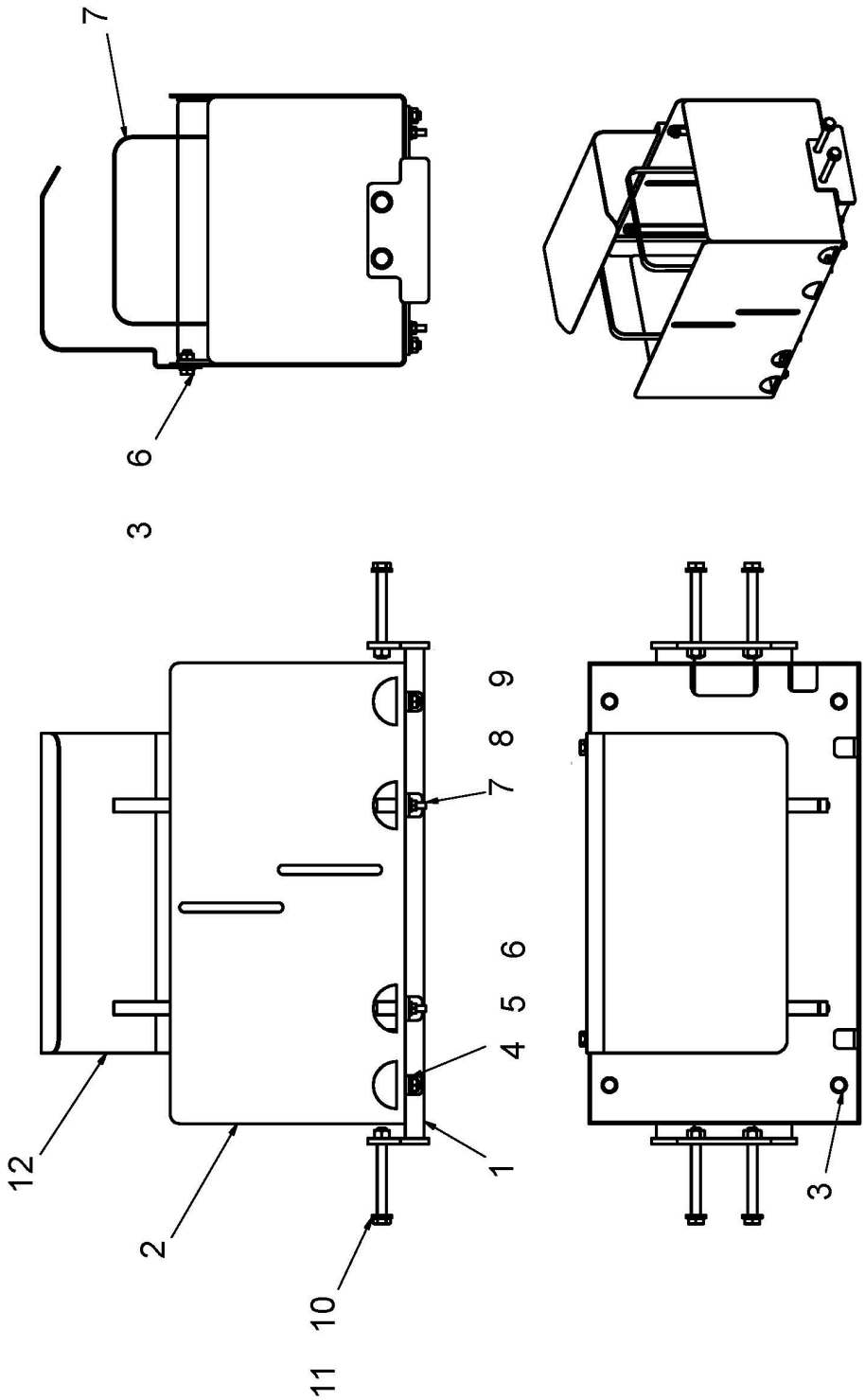

Item	Part No.	Name	Qty	L	SN INFO
1	4812247649	Mounting bracket	1		
2	4812247650	Sun canopy	1		
3	0301233500	Plain washer(A) 8.4 x 16 x 1.6	6		
4	D939776113	Washer	4		
5	0266211000	Nut DIN934	4		
6	0147132303	Hex head screw M8 x 20	6		
7	4812247652	Steel strap	2		
8	D939776111	Washer	4		
9	5730015118	Hexagon nut	4		
10	D939776115	Washer	4		
11	0147137603	Hexagon head screw	4		
12	4812247651	Top cover	1		

Engine system 4812243136 DEF Tank

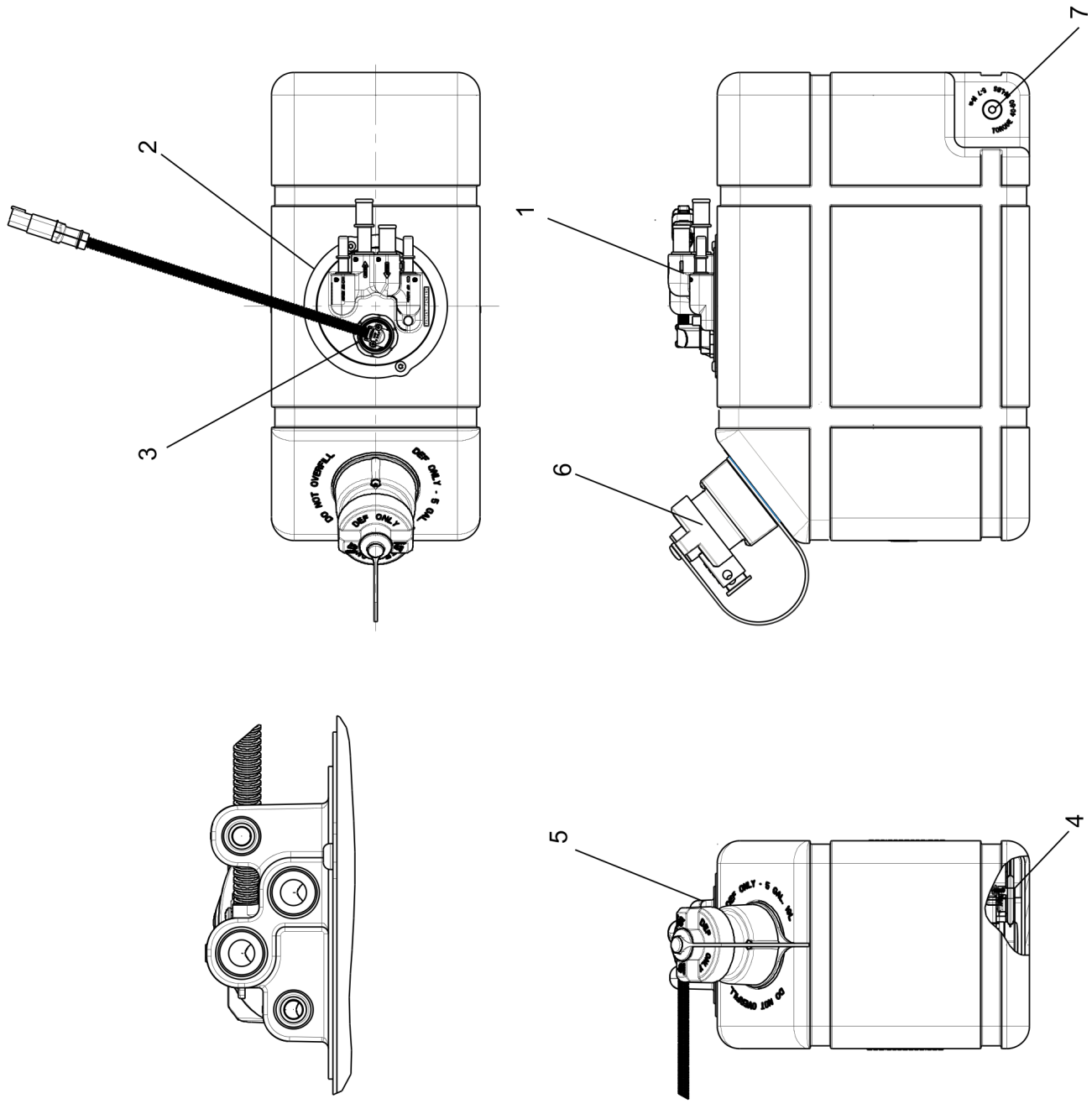

Item	Part No.	Name	Qty	L	SN INFO
1	4812274581	Multifunction head	1		
2	4812274582	Ring and screw	1		
3	4812274583	Level sensor kit	1		
4	4812274584	Suction strainer	1		
5	4812274585	Tank and cap adapter	1		
6	4812274586	DEF cap	1		
7	4812274587	Drain plug	1		
8	4812274588	Multifunction head oring	1		

Cooling system Cooling system

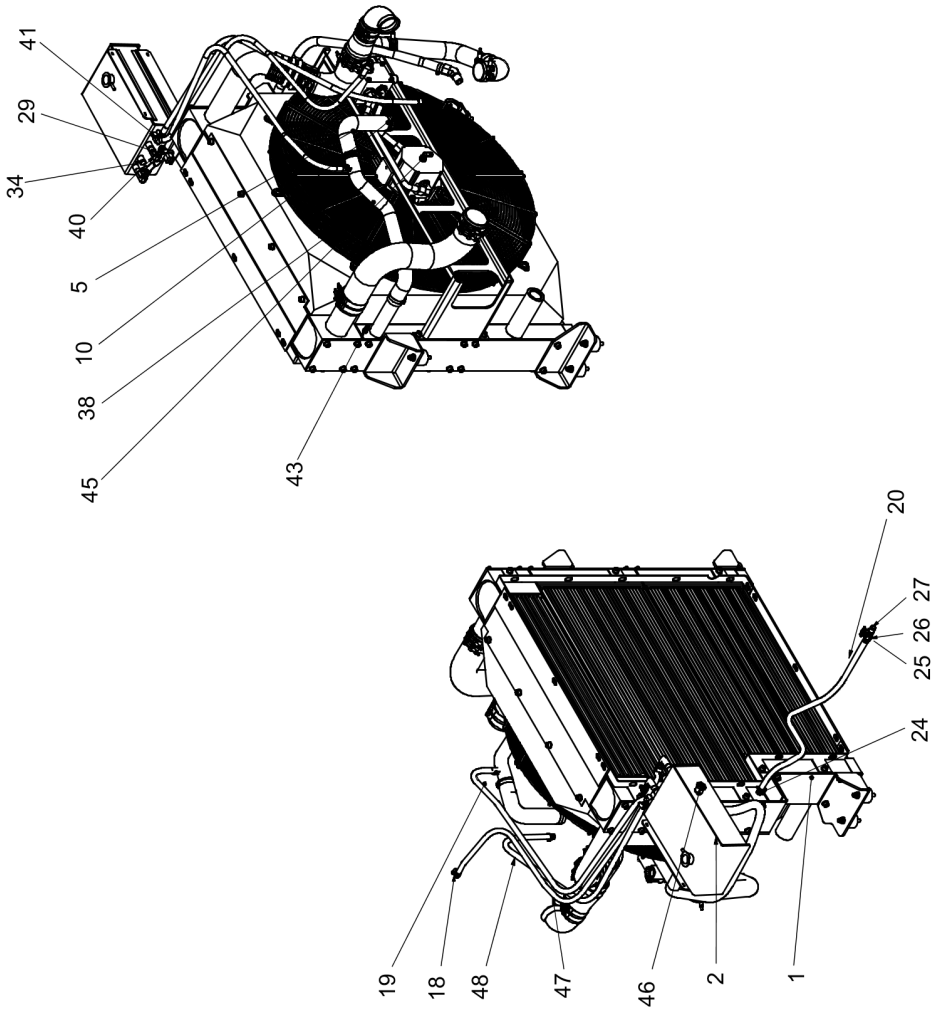

Item	Part No.	Name	Qty	L	SN INFO
1	4812222304	Combi cooler	1		
2	4812222303	Coolant surge tank	1		
01	4812200309	Cap	1		
3	4812220516	Elbow, radiator out	1		
4	4812220515	Elbow, radiator out	1		
5	4812220521	Elbow, radiator in	1		
6	4812223777	CAC in	1		
7	4812223780	Elbow, CAC in	1		
8	D717085041	Hose, cac hump	1		
9	4812200432	Hose clamp, 3 1/4'	10		
10	4812220960	T-bolt clamp, 2'	4		
11	4812220881	Cooler isolator	6		
12	D939776115	Washer	8		
13	D717800820	Lock nut, M10	8		
14	4812200419	Hose clamp, 2 3/4'	4		
15	D717085054	Sensor, coolant level	1		
18	D717909516	Clamp, worm drive	8		
19	4812220910	Hose vent	1		
01	4812222099	Stripe heater hose	1372		
20	4812222299	Drain hose	1		
01	4812222099	Stripe heater hose	939		
21	4812222300	Coolant hose, engine to surge tank	1		
01	4812222097	Stripe heater hose	1346		
22	D717801933	Plug, 06	1		
23	4812220509	Elbow, CAC out	1		
24	D717802045	Hose barb, 06-04	1		
25	D717085102	Needle valve	1		
26	4812220956	Adapter, 1/4'-3/8'	1		
27	4812220957	Plug, 1/4'	1		
28	4812220912	T-bolt clamp, 2 7/8'	2		
29	4812221839	Adapter, 06-06	3		
30	4812221840	Adapter, 16-12	1		
31	4812221841	Adapter, 12-12	2		
32	4812221842	Elbow, 12-12	1		
34	4812222086	Plug, 3/8'	1		
35	D717085061	Clamp	2		
36	4812222291	Hose, CAC out	1		

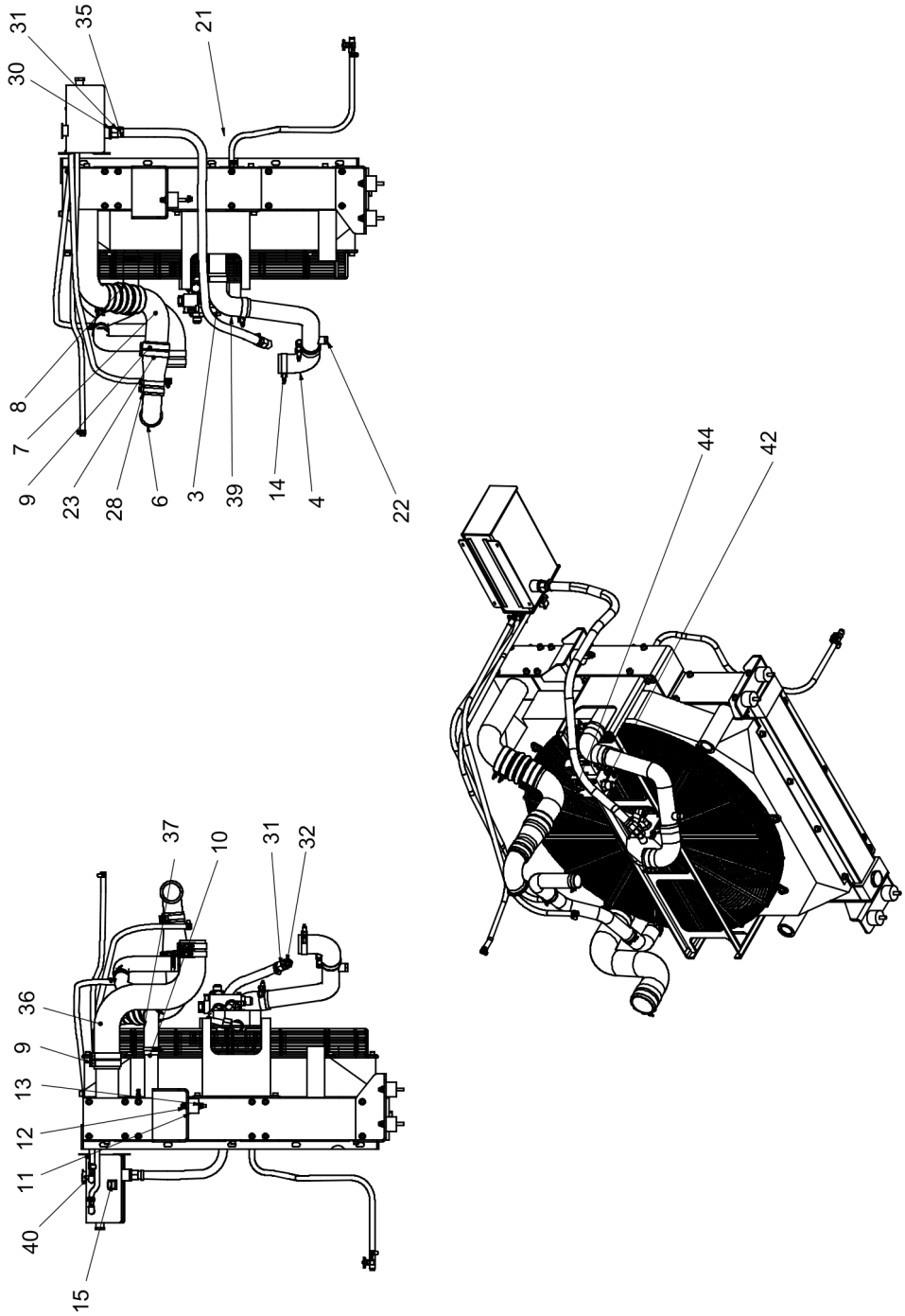
31
35
21
30
8
7
9
23
28
6
3
39
14
4
22
44
42
37
10
31
32
36
9
13
12
11
40
15

Item	Part No.	Name	Qty	L	SN INFO
37	4812222293	Elbow, RAD in	1		
38	4812223785	Pipe, PAD in	1		
39	4812223786	Pipe assy, PAD out	1		
40	4812200418	Elbow, 06-06 long	2		
41	4812200417	Elbow, 06-06	1		
42	D717800066	Adapter, 12-12	1		
43	4812200120	Plug, 1/4'	1		
44	D717802689	ADAPTER,STR,-12 M JIC	1		
45	4812200081	Elbow, 06-04	1		
46	D717085078	Sight gauge	1		
47	4812247141	Hose, vent	1		
01	4812222099	Stripe heater hose	1500		
48	4812247142	Hose, vent	1		
01	4812222099	Stripe heater hose	1400		

Cooling system 4812222304 Combi cooler

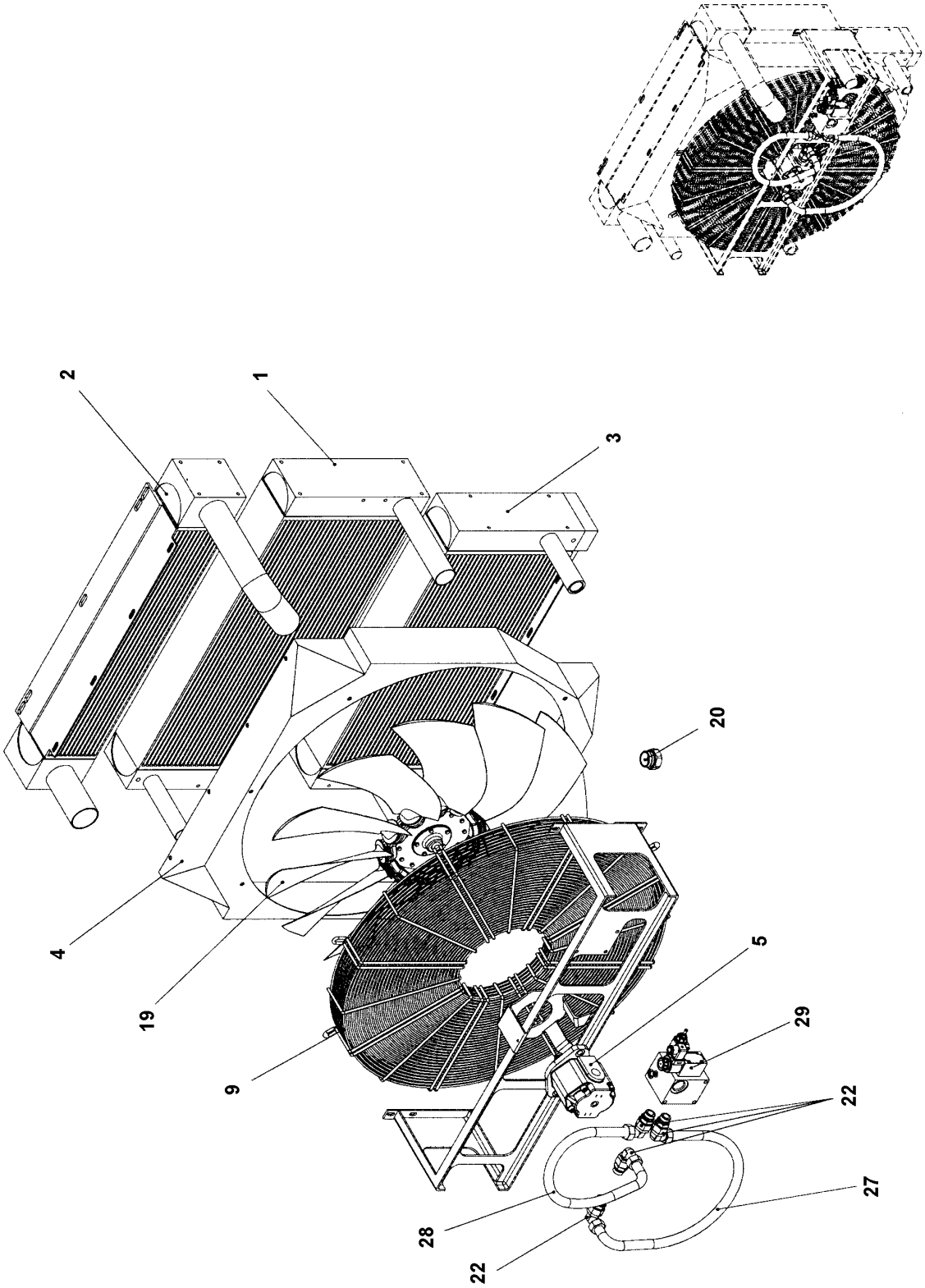

Item	Part No.	Name	Qty	L	SN INFO
1	4812270229	HE rad 1070x423x140 Reg 1P	1		
2	4812270230	HE CAC 1070x162x140 Reg 1P	1		
3	4812270231	HE oil 940x397x140 Reg 1P	1		
4	4812270232	Housing	1		
5	4812270233	Hydraulic motor	1		
9	4812270234	Fan grill	1		
19	4812270235	Fan	1		
20	4812270236	IBT45 2 bar assembly	1		
22	4812270237	Fitting	4		
27	4812270238	Hose assembly, left	1		
28	4812270239	Hose assembly, right	1		
29	4812270240	Block	1		

F1000T/W engine system Exhaust system

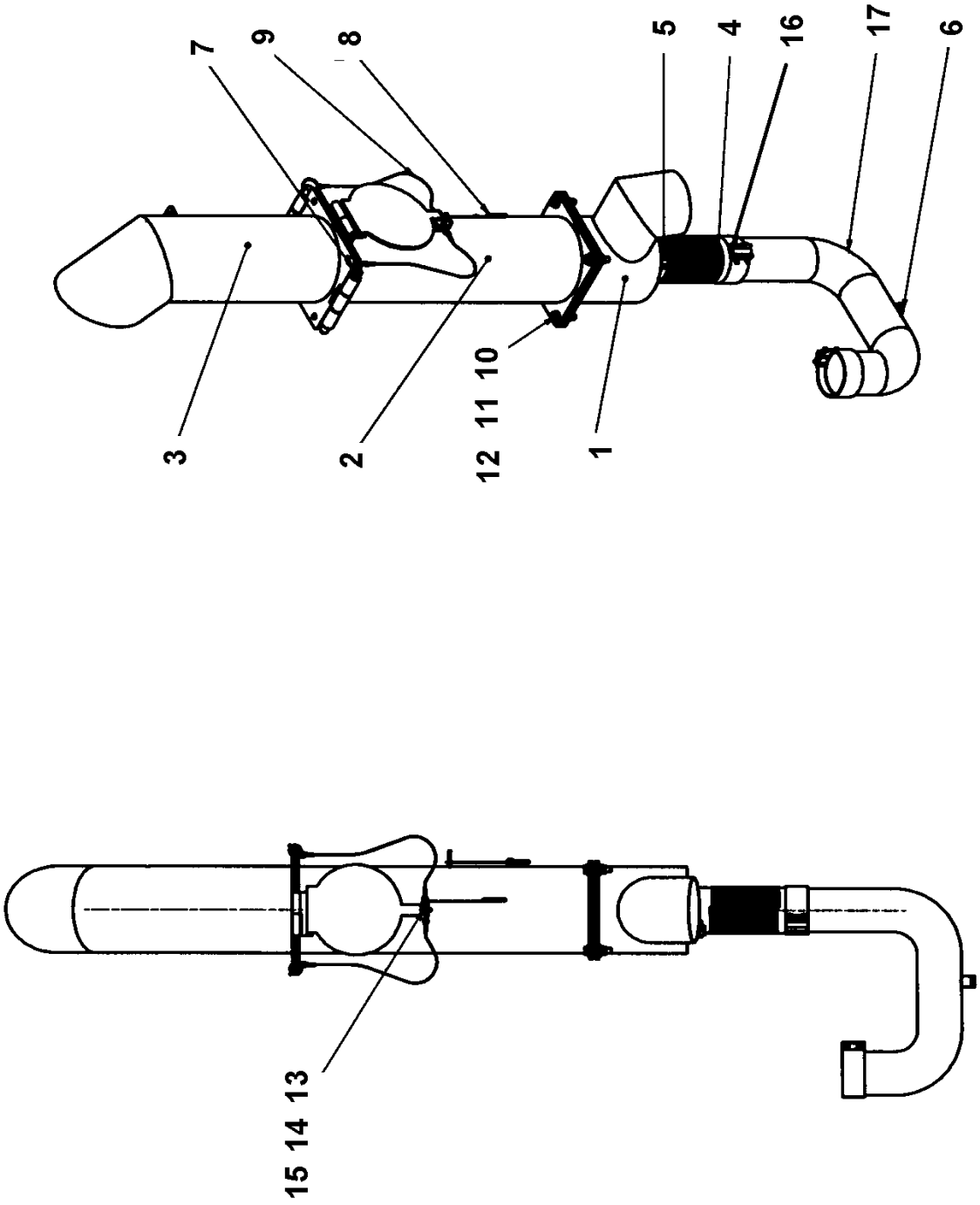

Item	Part No.	Name	Qty	L	SN INFO
1	4812223730	Exhaust tee	1		
2	4812223736	Hood mount, bottom	1		
3	4812223745	Mount, top hood	1		
4	4812223753	Flexible pipe	1		
5	4812220715	Clamp, flat	1		
6	D717801933	Plug, 06	1		
7	D717081527	Pin, stack hinge	2		
8	D717081528	Quick pin with lanyard	2		
9	D717081533	Lanyard, hinge pin	2		
10	0147196069	Screw	4		
11	D939776117	Flat washer	8		
12	5730008013	Hexagon nut	4		
13	0147117303	Hex. head screw	1		
14	4812025391	Washer	2		
15	0291112862	Hexagon nut	1		
16	4812221856	Band clamp	2		
17	4812243127	Exhause pipe	1		
18	4812247598	Heat resistant bandage 10 meter	1		

Track, assembly Track, assembly

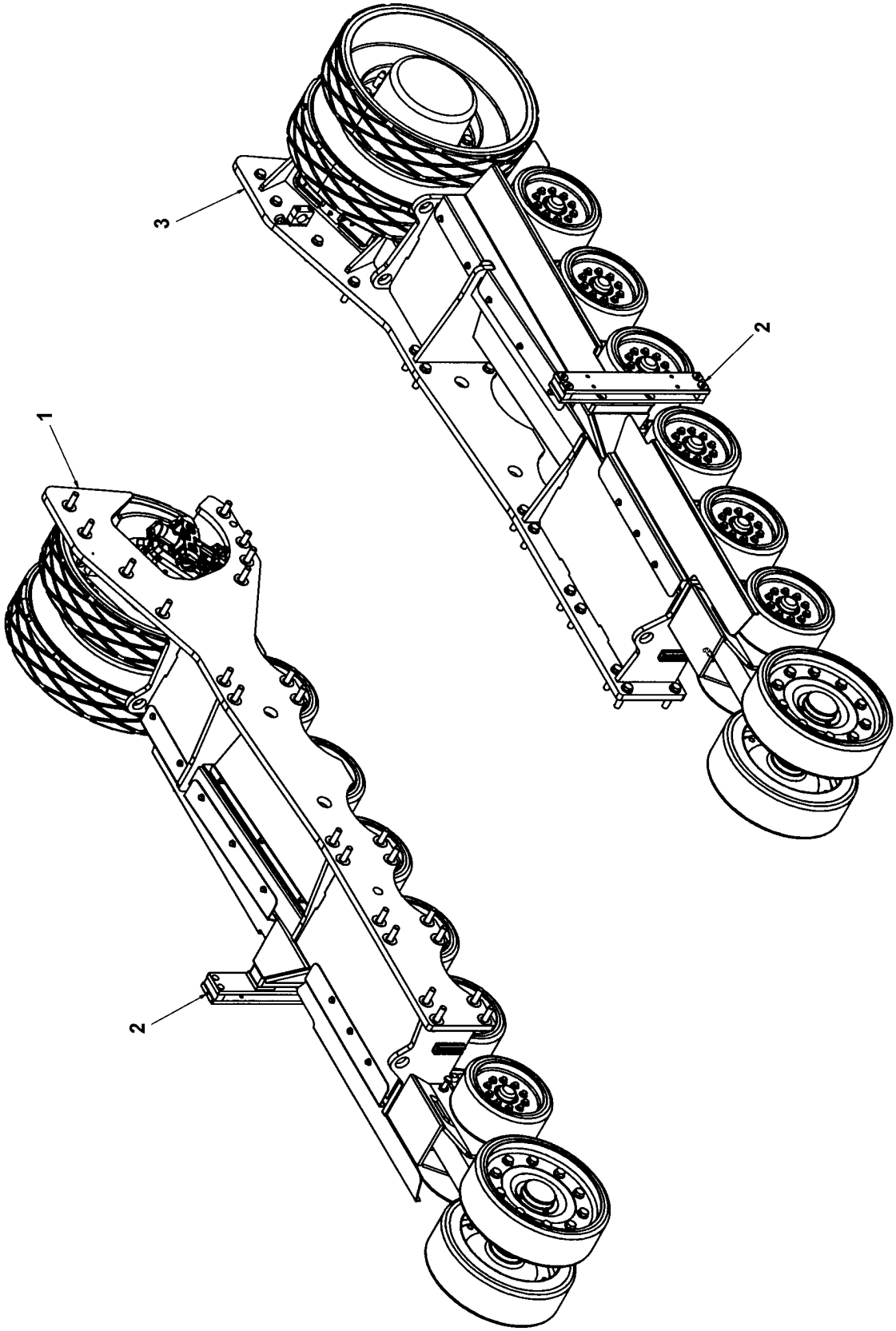

Item	Part No.	Name	Qty	L	SN INFO
1		RH track undercarriage assembly	1		
2		Screed leveling guide assembly	1		
3		LH track undercarrage assembly	1		

Track, assembly Screed leveling guide assembly

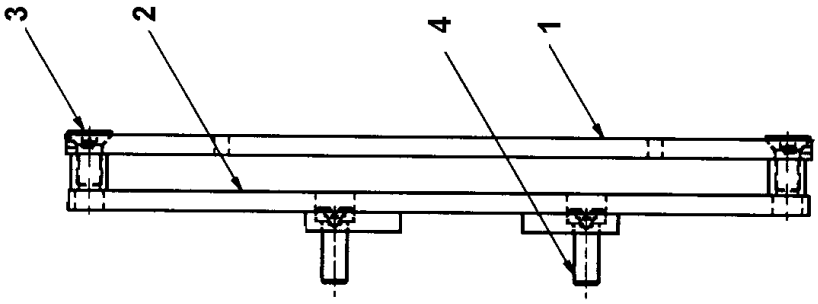

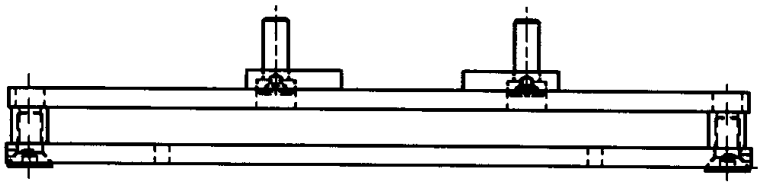

Item	Part No.	Name	Qty	L	SN INFO
1	4812223150	Cover, arm bracket	2		
2	4812223149	Arm retainer weldment	2		
3	4812223289	Screw	8		
4	4812223301	Hexagon socket head cap screw	8		

RH track undercarriage assembly RH track undercarriage assembly

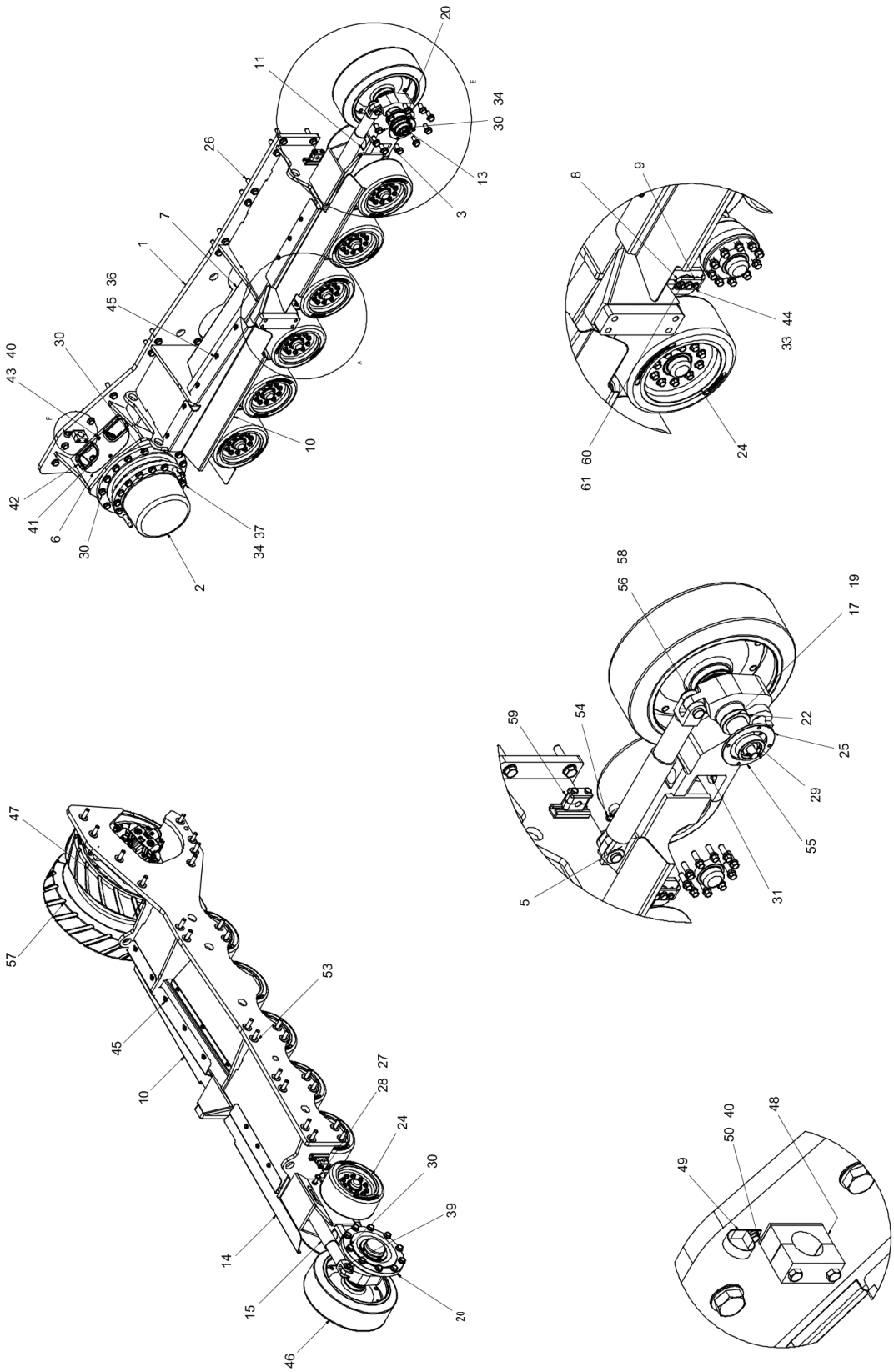

Item	Part No.	Name	Qty	L	SN INFO
1	4812223122	Weldment, track frame RH	1		
2		Drive subassembly	1		
3	4812223398	Idler frame	1		
5	4812223435	Pin, tensioning cylinder bore end	1		
6	4812223123	Cover plate	1		
7	4812223124	Inner track guard	1		
8	4812223125	Pin, bogie	3		
9	4812223126	Lock plate	3		
10	4812223127	Rear track guard, right	1		
11	4812223128	Pin, tension	1		
12	4812223129	Retainer, tension assembly	1		
13	4812045878	Crown nut	2		
14	4812223130	Front track guard, right	1		
15	4812249596	Cylinder, track tension	1		
01	4812313153	Cylinder 4812249596 seal kit	1		
16	4812223131	Cover,dust, bolt	2		
17	D717170630	O-ring	2		
18	4812223132	Bushing	1		
19	4812223133	Spacer, seal, idler wheel hub	2		
20		Assembly, hub, idler wheel	2		
21	4812223138	Weldment, track tensioner pin	1		
22	4812242270	Bushing, tensioner	1		
23	4812223141	Block, tensioner	1		
24		Bogie assembly	3		
25	4812223144	Washer	2		
26	4812223294	Hexagon bolt	24		
27	4812223285	Hexagon nut	2		
28	4812223292	Hexagon bolt	2		
29	4700904234	Steel plain washer	2		
30	4812223296	Hexagon bolt	36		
31	0216195773	Countersunk screw	2		
32	0147132503	Hex head screw	8		
33	D939776113	Washer	11		
34	D939776129	Locking washer	74		
35	4812223284	Hexagon bolt	3		
36	D939776115	Washer	16		
37	D938116929	Hex. screw	14		

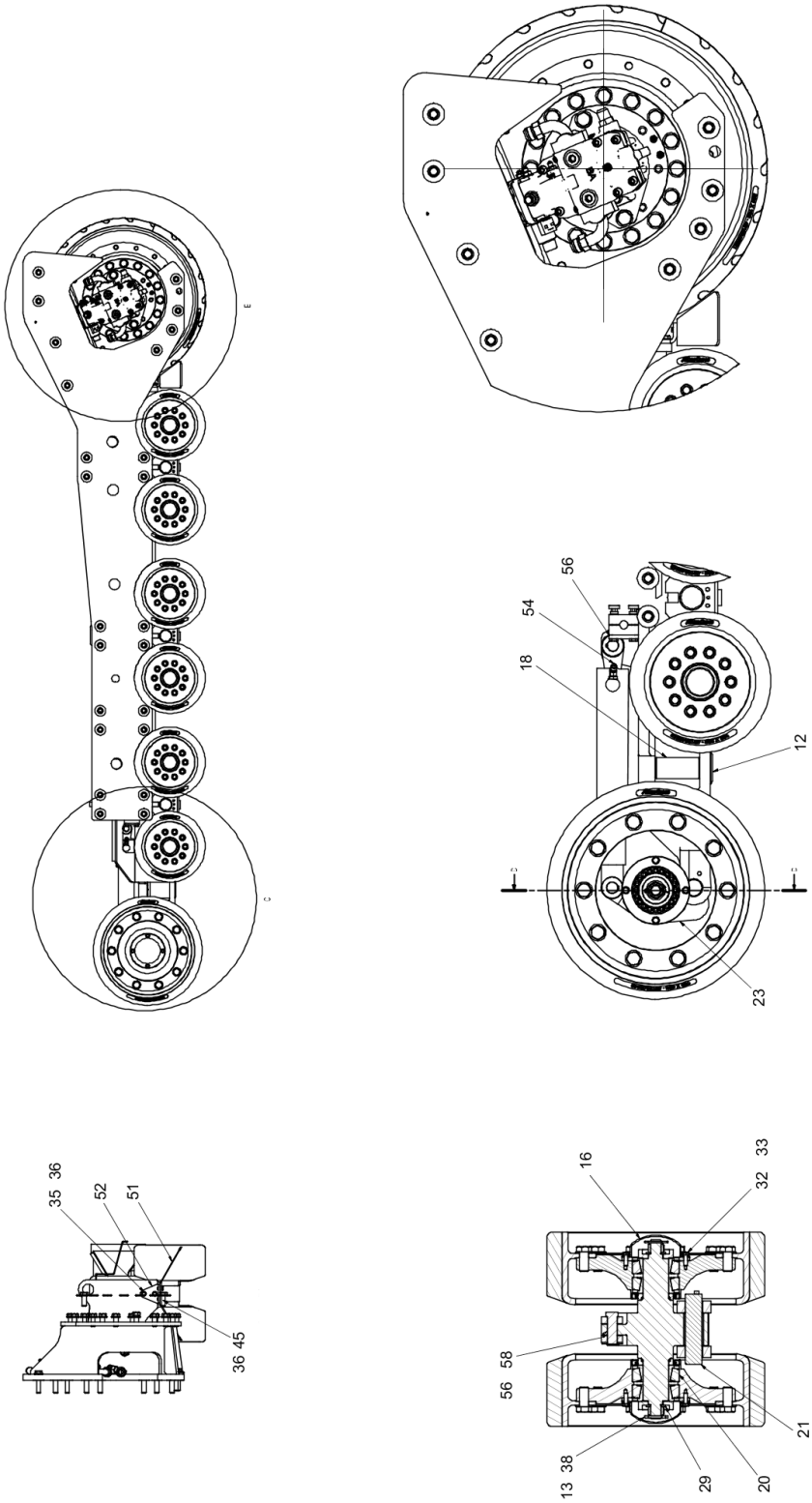
56
54
18
12
23
16
33
32
58
56
21
13 38
29
20
35 36
52
51
36 45

Item	Part No.	Name	Qty	L	SN INFO
38	4812241125	Split pin	2		
39	4812223436	Ring, external retaining	2		
40	D939776111	Washer	3		
41	D717172928	Protective strip	2		
42	D717172929	Protective strip	2		
43	0147124703	Screw M6 x 20	2		
44	0147110836	Hexagon head screw	3		
45	0147136003	Hexagon bolt	13		
46	4812242548	Idler wheel	2		
47	4812242551	Drive wheel, LH	1		
48	4812221694	Stauff clamp	1		
49	D717104038	P clamp, 1.25'	1		
50	D938155547	Hexagon bolt	1		
51	4812223154	Dirt guard	1		
52	4812223153	Dirt guard support	1		
53	4812223152	Shim kit	24		
54	D717802619	Elbow	1		
55	4812240808	Spacer	2		
56	4812242606	Washer	2		
57	4812242562	Drive wheel, RH	1		
58	4812223434	Pin, tensioning cylinder rod end	1		
59	4812247915	Hose clip, track tensioning	1		
60	4812223500	Bolt	6		
61	D939776117	Flat washer	6		

Drive subassembly Drive subassembly

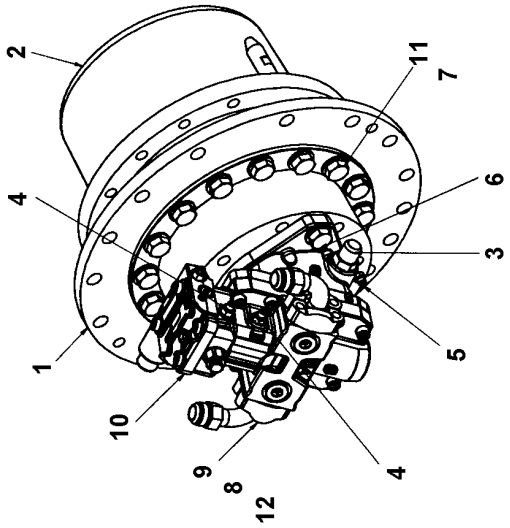

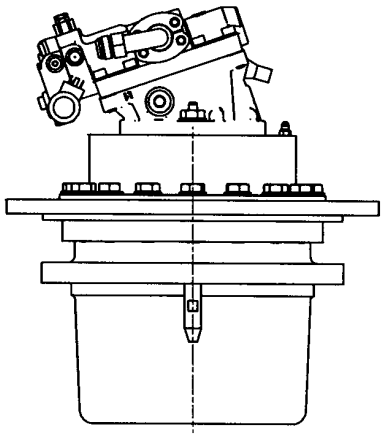

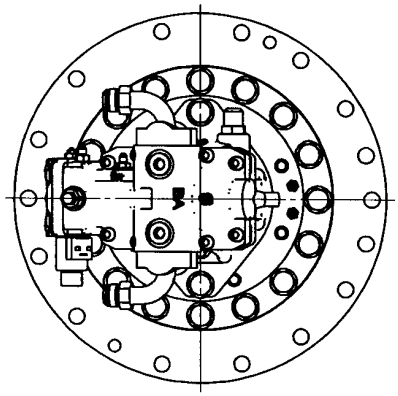

Item	Part No.	Name	Qty	L	SN INFO
1	4812223119	Adapter plate	1		
2	D717170600	Gearbox, track drive	1		
3	D717800066	Adapter, 12-12	1		
4	D717800281	Straight	2		
5	D717801534	Adapter	2		
6	D938116929	Hex. screw	2		
7	D939776129	Locking washer	18		
8	D932323235	O-ring	2		
9	D717800134	Flange	4		
10	D717171014	Motor track assy	1		
11	4812223298	Hexagon screw	16		
12	D717800155	Fitting	2		

Drive subassembly D717170600 Gearbox, track drive

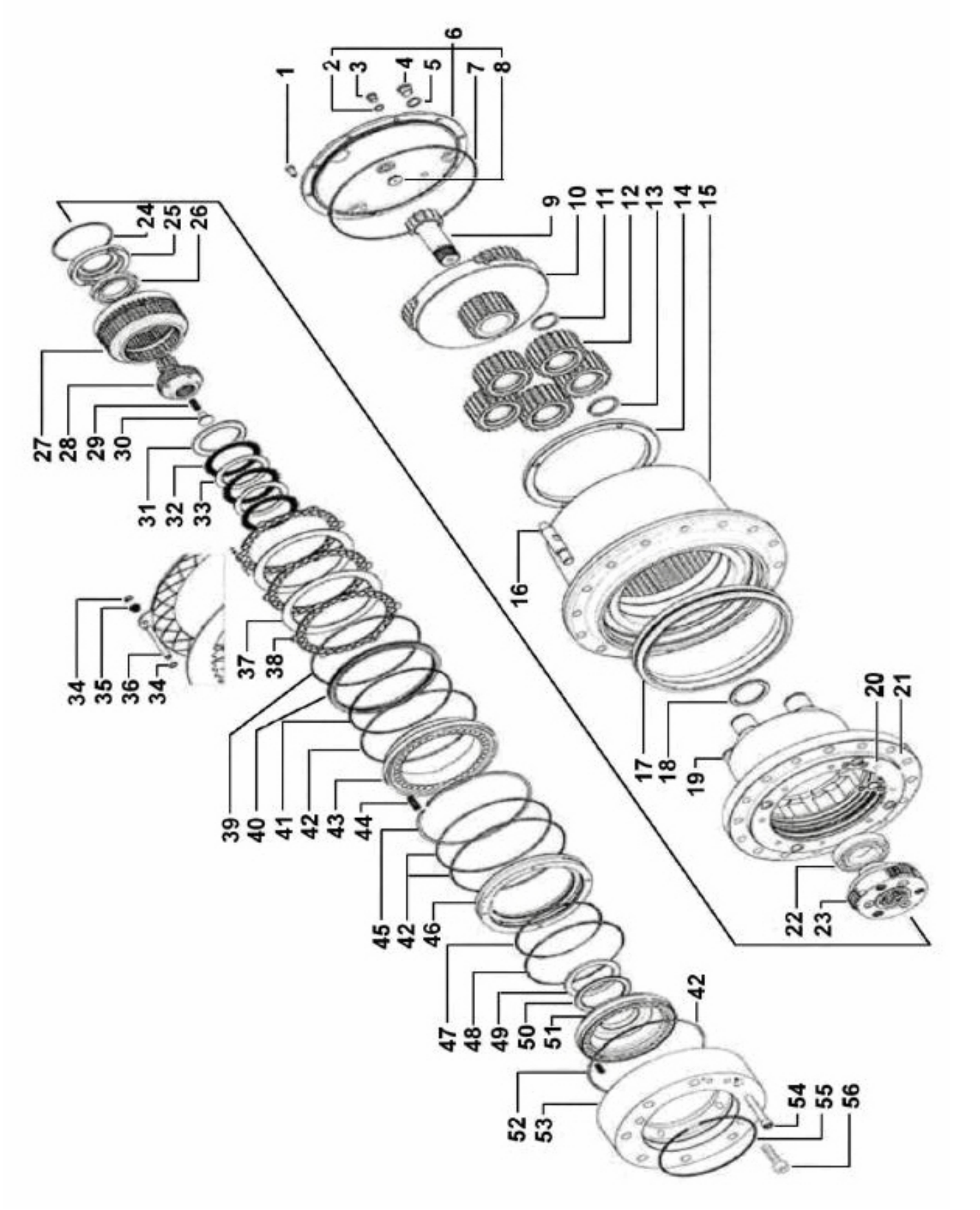

Item	Part No.	Name	Qty	L	SN INFO
1	D717951156	Screw	1		
2	D717951163	Washer	1		
3	D717951170	Plug	1		
4	D717951177	Plug	1		
5	D717951184	Washer	1		
6	D717951191	Cover	1		
7	D717951198	O-ring	1		
8	D717951205	Pad	1		
9	D717951212	Gear	1		
10	D717951219	Reduction	1		
11	D717951317	Circlip	1		
12	D717951324	Planetary	1		
13	D717951331	Spacer	1		
14	D717951338	Nut	1		
15	D717951345	Housing and bearing	1		
16	D717951352	Pin	1		
17	D717951359	Seal	1		
18	D717951366	Ring	1		
19	D717951373	Hub	1		
20	D717951380	O-ring	1		
21	D717951387	O-ring	1		
22	D717951394	Bearing	1		
23	D717951401	Reduction	1		
24	D717951408	Circlip	1		
25	D717951415	Spring retaining plate	1		
26	D717951422	Bearing	1		
27	D717951429	Ring	1		
28	D717951436	Gear	1		
29	D717951443	Spring	1		
30	D717951450	Disc	1		
31	D717951457	Spacer	1		
32	D717951464	Disc	1		
33	D717951471	Disc	1		
34	D717951478	Circlip	1		
35	D717951485	Spring	1		
36	D717951492	Pin	1		
37	D717951499	Disc	1		

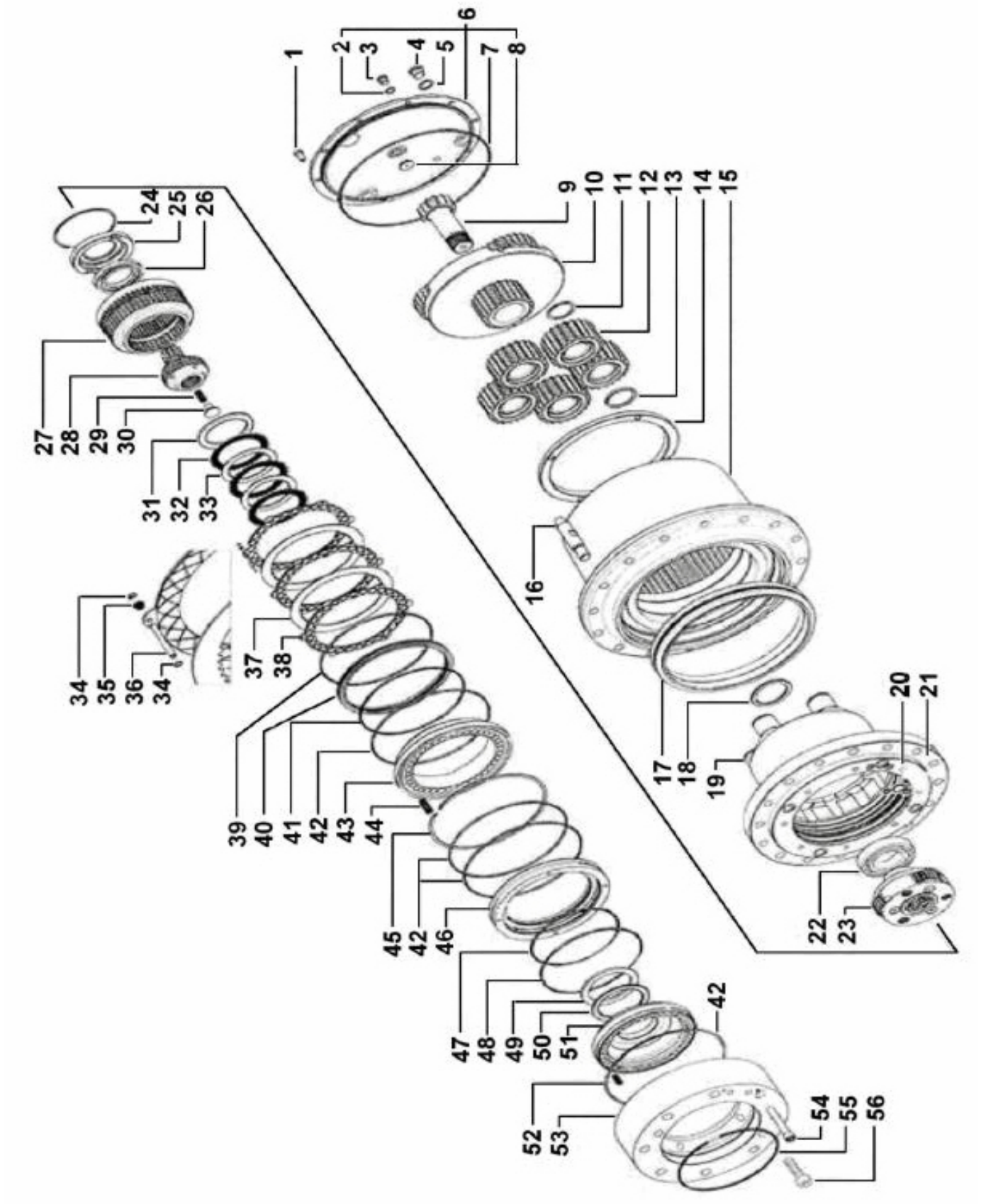
1
2
3
4
5
6
7
8
9
10
11
12
13
14
15
16
17
18
19
20
21
22
23
24
25
26
27
28
29
30
31
32
33
34
35
36
34
37
38
39
40
41
42
43
44
45
42
46
47
48
49
50
51
42
52
53
54
55
56

Item	Part No.	Name	Qty	L	SN INFO
38	D717951506	Disc	1		
39	D717951513	O-ring	1		
40	D717951520	Spacer	1		
41	D717951527	O-ring	1		
42	D717951534	O-ring	1		
43	D717951541	Piston	1		
44	D717951548	Spring	1		
45	D717951555	Circlip	1		
46	D717951562	Spacer	1		
47	D717951569	O-ring	1		
48	D717951576	O-ring	1		
49	D717951583	Thrust washer	1		
50	D717951590	Bearing	1		
51	D717951597	Piston	1		
52	D717951604	Spring	1		
53	D717951611	Adapter	1		
54	D717951618	Screw	1		
55	D717951625	O-ring	1		
56	D717951632	Screw	1		

Drive subassembly D717171014 Motor, propel

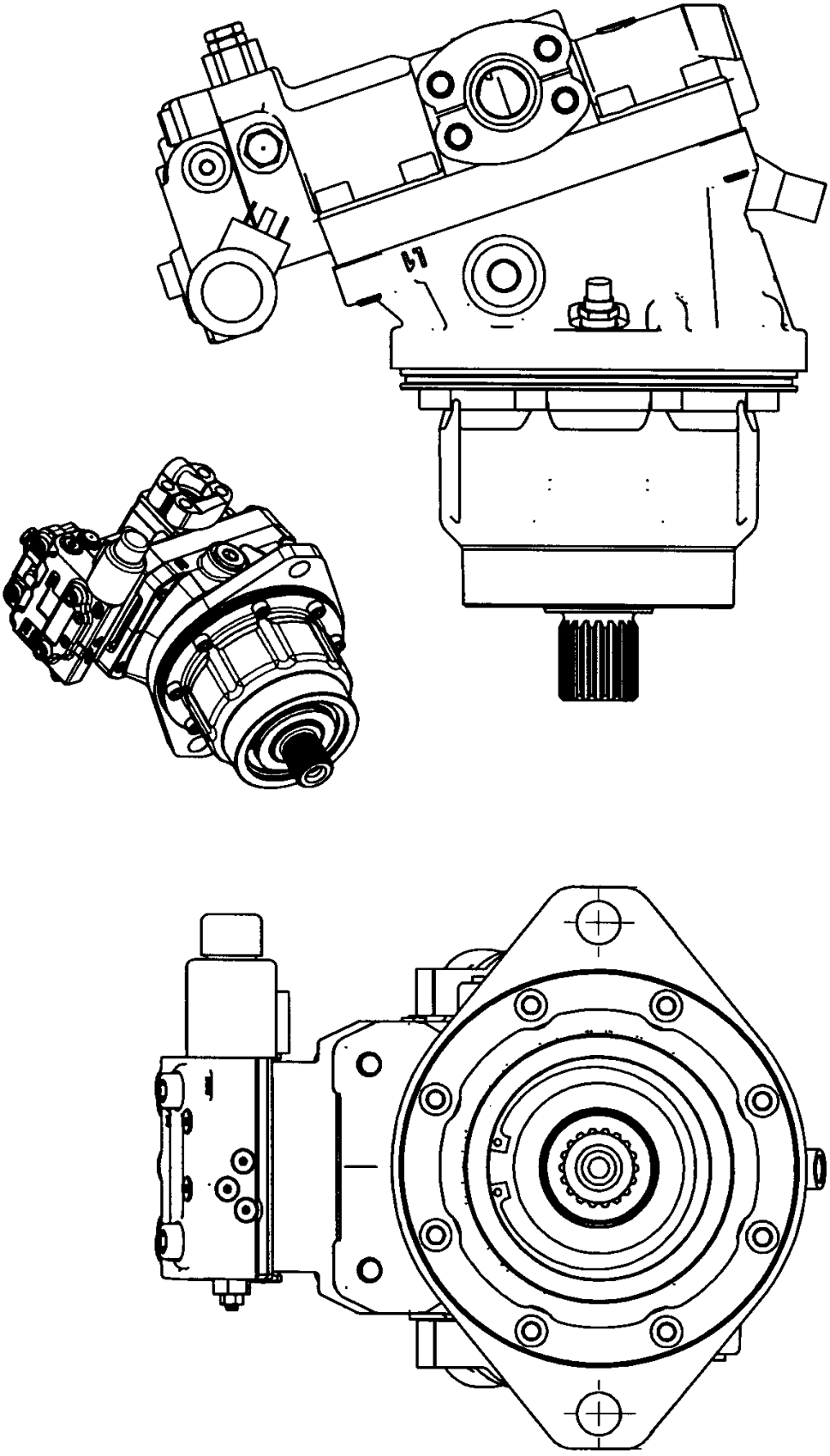

Item	Part No.	Name	Qty	L	SN INFO
1	D717950778	Set screw	1		
2	D717950785	Screw	2		
3	D717950792	Plug	3		
4	D717950799	Cylinder block	1		
5	D717950806	Motor housing	1		
6	D717950813	Gasket	1		
7	D717950827	O-ring	1		
8	D717950834	Plug	9		
9	D717950855	O-ring	1		
10	D717950862	Valve segment	1		
11	D717950869	Screw adjusting assembly	1		
12	D717950876	Seal carrier assembly	1		
13	D717950883	Housing	1		
14	D717950890	O-ring gasket seal	1		
15	D717950897	Shaft	1		
16	D717950904	Support pin	2		
17	D717950911	Spring guide	2		
18	D717950918	Bearing plate	1		
19	D717950925	Gasket	1		
20	D717950932	Relief valve	1		
21	D717950939	Synch shaft kit	1		
22	D717950946	End cap	1		
23	D717950953	Plug	2		
24	D717950960	Spring	1		
25	D717950967	Lip seal	1		
26	D717950974	Ring seal	1		
27	D717950981	Orifice	1		
28	D717950988	Retaining ring	2		
29	D717950995	Safety cap	1		
30	D717951002	Piston ring kit	1		
31	D717951009	Charge relief cartridge kit	1		
32	D717951016	Spool	1		
33	D717951037	Nut seal	1		
34	D717951044	O-ring	1		
35	D717951051	O-ring	1		
36	D717951058	O-ring	9		
37	D717951065	O-ring	9		

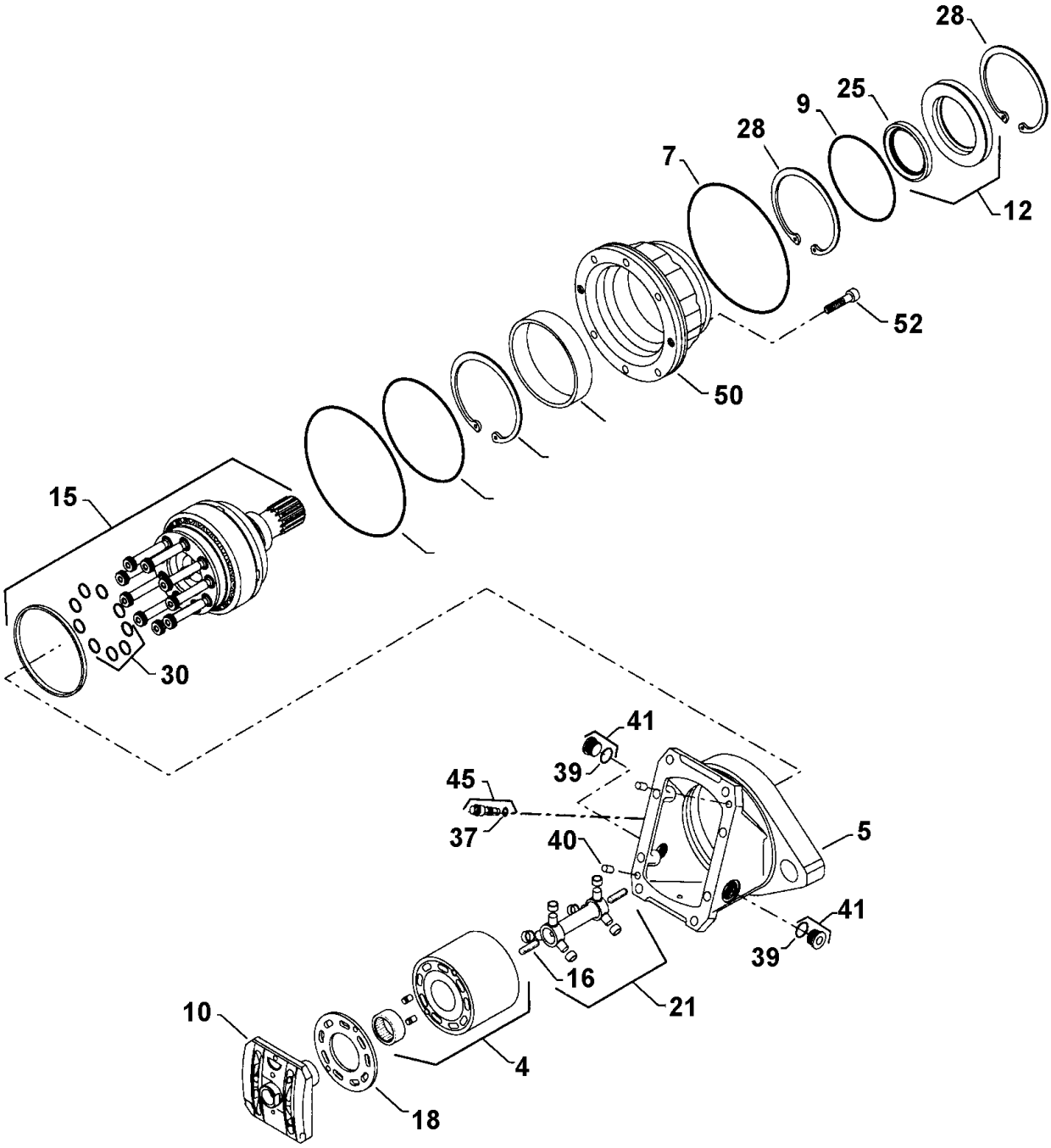
28
25
9
28
7
12
52
50
15
30
41
39
45
37
40
5
41
39
16
21
10
4
18

Item	Part No.	Name	Qty	L	SN INFO
38	D717951072	O-ring	1		
39	D717951079	O-ring	4		
40	D717951086	Pin	2		
41	D717951093	Plug	4		
42	D717951107	Socket-head screw	8		
43	D717951114	Screw	2		
44	D717951121	Set screw	2		
45	D717951128	Sensor	1		
49	D717952955	Servo piston assembly	1		
50	D717953557	Bearing housing	1		
51	D717953620	Solenoid valve	1		
52	D717954138	Socket-head screw	8		

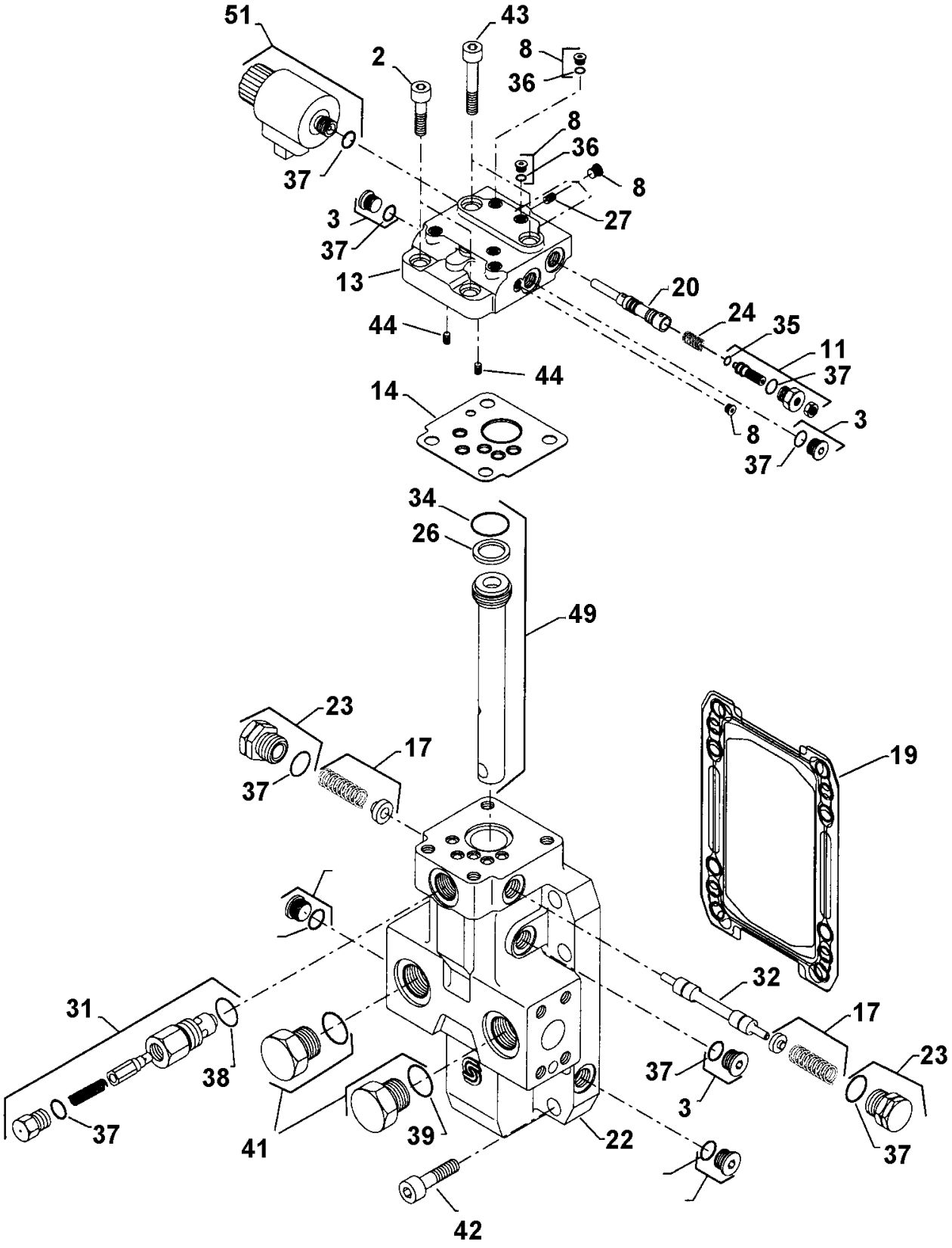
51
43
2
8
36
8
36
37
8
3
27
37
13
20
24
35
44
11
44
37
14
3
8
37
34
26
49
23
17
19
37
32
31
17
38
37
23
3
37
41
39
22
37
42

This page intentionally left blank

RH track undercarriage assembly Cylinder, track tension

NO DRAWING AVAILABLE FOR THIS BOM

Item	Part No.	Name	Qty	L	SN INFO
1	4812269127	Seal kit piston	1		
2	4812269128	Seal kit gland	1		
3	4812269129	Wear ring piston	2		
4	4812269130	Wear ring gland	1		

RH track undercarriage assembly Assembly, hub, idler wheel

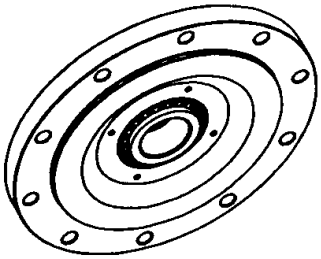

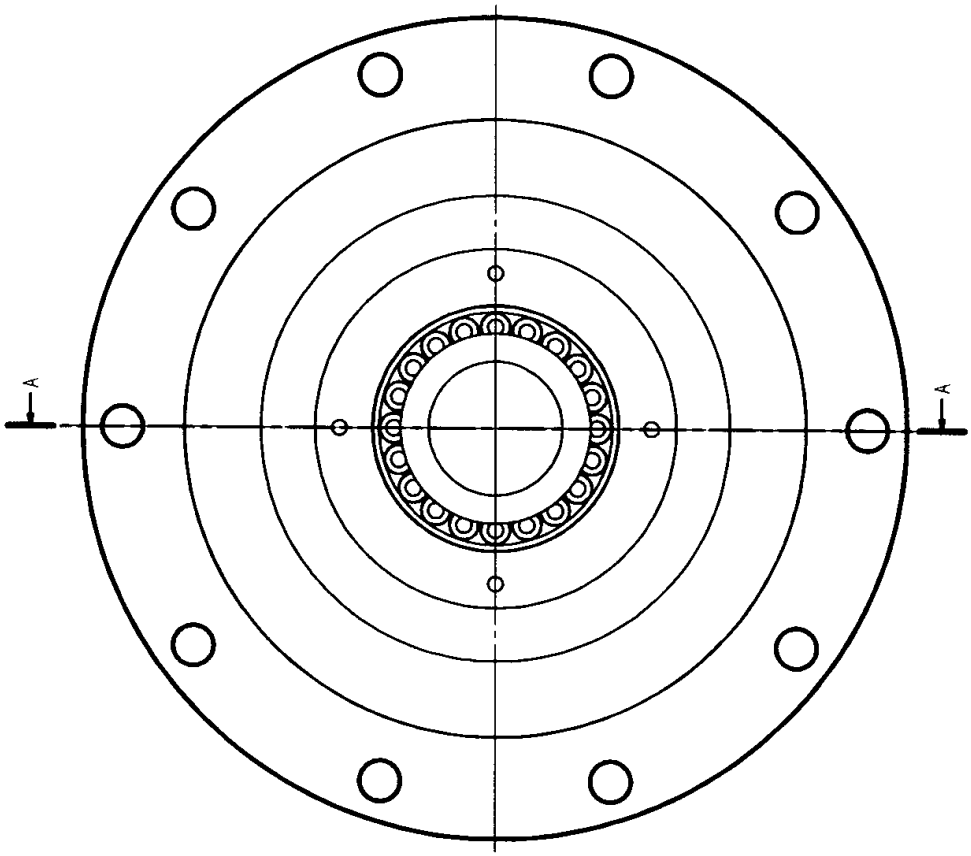

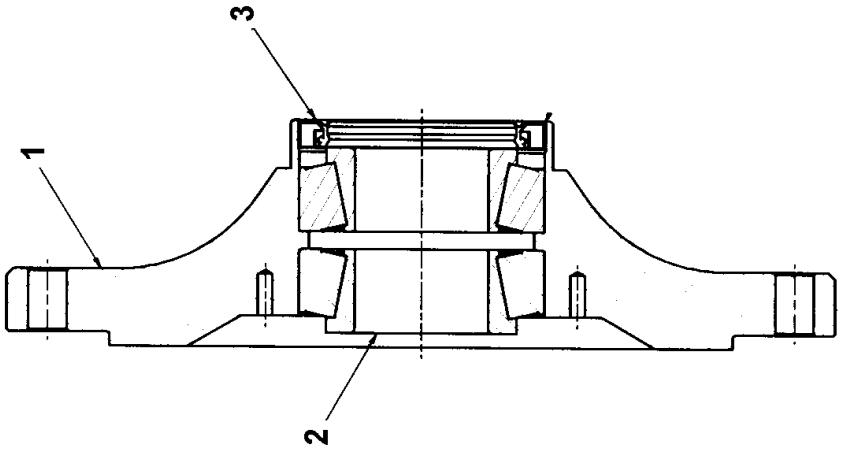

Item	Part No.	Name	Qty	L	SN INFO
1	4812223134	Hub, idler wheel	1		
2	D717170629	Tapered roller bearing	2		
3	D717170628	Seal	1		

RH track undercarriage assembly Bogie assembly

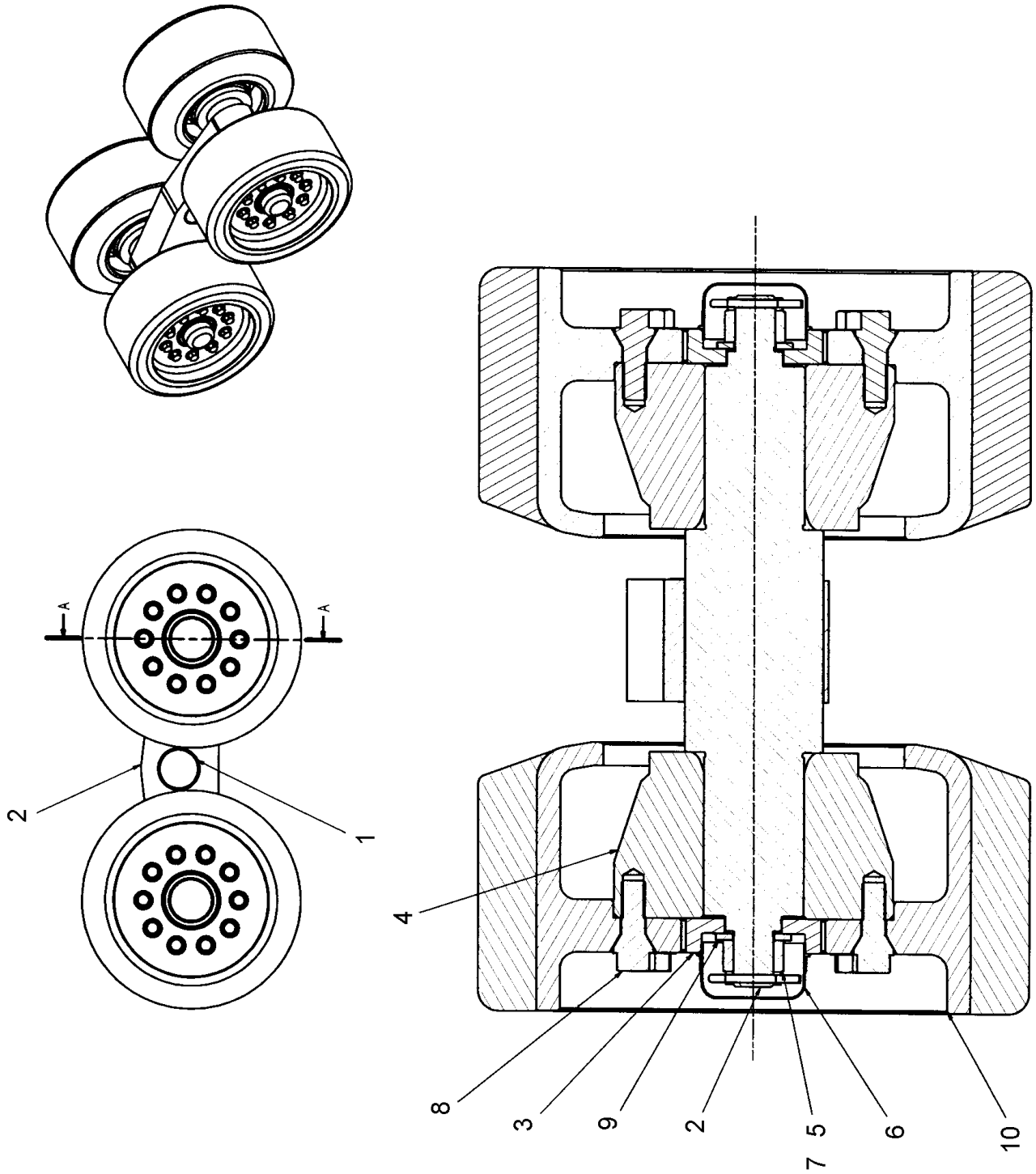

Item	Part No.	Name	Qty	L	SN INFO
1	D717170547	Bushing, bogie	1		
2		Weldment, bogie spindle	1		
3	4812223144	Washer	4		
4	D717170550	Hub, bogie wheel	4		
5	4812045878	Crown nut	4		
6	D717170603	Dust cap	4		
7	4812241125	Split pin	4		
8	D717170626	Wheel lug bolt, M14	40		
9	4700904234	Steel plain washer	4		
10	4812242545	Bogie wheel	4		

LH track undercarrage assembly LH track undercarriage assembly

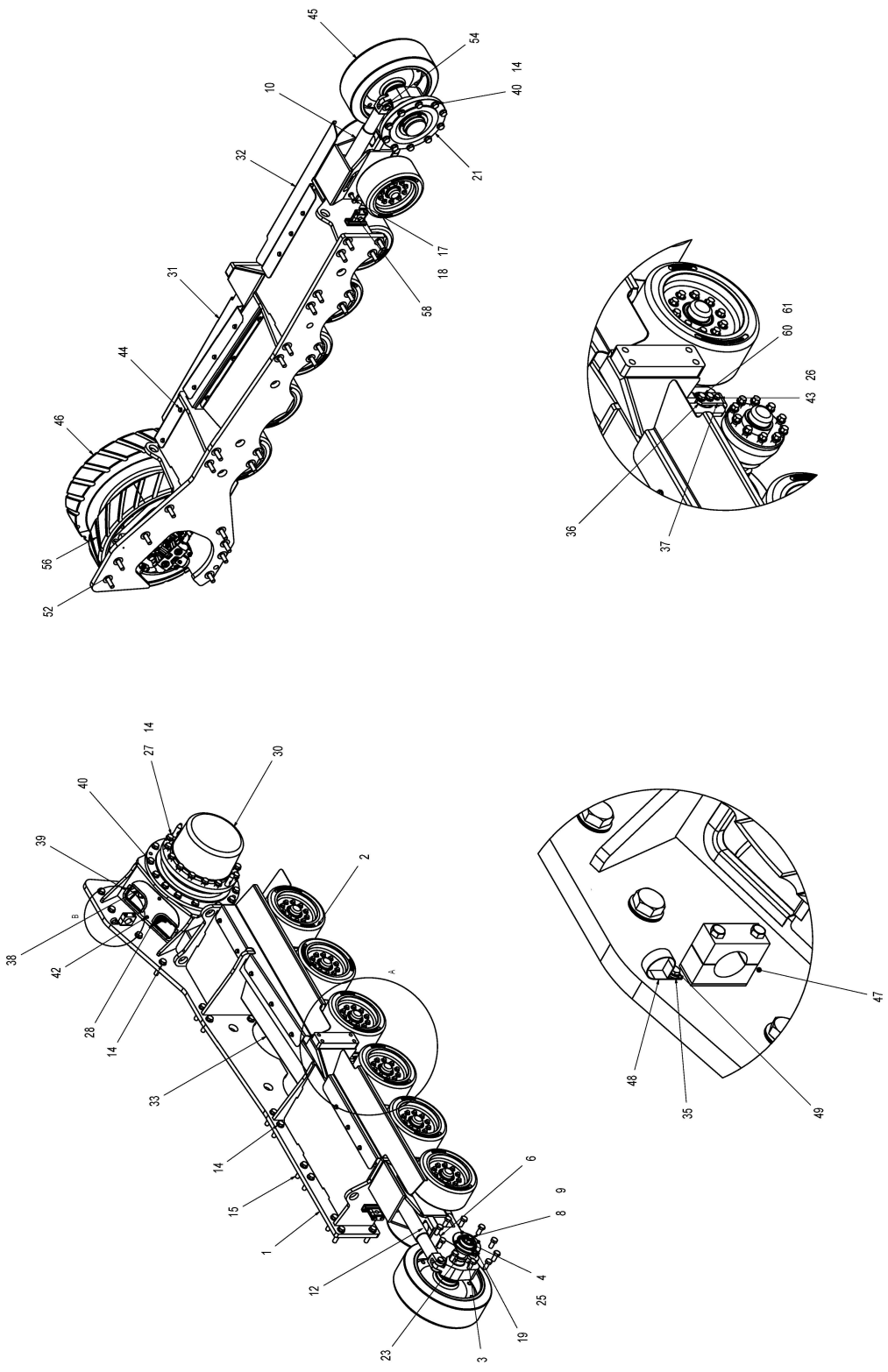

Item	Part No.	Name	Qty	L	SN INFO
1	4812223162	Weldment, track frame, LH	1		
2		Bogie assembly	3		
3	4812242270	Bushing, tensioner	1		
4	4812223144	Washer	2		
5	4812223132	Bushing	1		
6		Idler frame	1		
7	4812223141	Block, tensioner	1		
8	4812045878	Crown nut	2		
9	4812241125	Split pin	2		
10	4812249596	Cylinder, track tension	1		
01	4812313153	Cylinder 4812249596 seal kit	1		
11	4812223138	Weldment, track tensioner pin	1		
12	4812223128	Pin, tension	1		
13	4812223129	Retainer, tension assembly	1		
14	D939776129	Locking washer	74		
15	4812223294	Hexagon bolt	24		
16	0216195773	Countersunk screw	2		
17	4812223292	Hexagon bolt	2		
18	4812223285	Hexagon nut	2		
19	4812223284	Hexagon bolt	3		
20	D939776115	Washer	16		
21		Assembly, hub, idler wheel	2		
22	4812223131	Cover,dust, bolt	2		
23	4812223133	Spacer, seal, idler wheel hub	2		
24	D717170630	O-ring	2		
25	4700904234	Steel plain washer	2		
26	D939776113	Washer	17		
27	D938116929	Hex. screw	14		
28	4812223123	Cover plate	1		
29	4812223435	Pin, tensioning cylinder bore end	2		
30		Drive subassembly	1		
31	4812223156	Rear track guard, LH	1		
32	4812223157	Front track guard, LH	1		
33	4812223124	Inner track guard	1		
34	4812223436	Ring, external retaining	2		
35	D939776111	Washer	3		
36	4812223125	Pin, bogie	3		

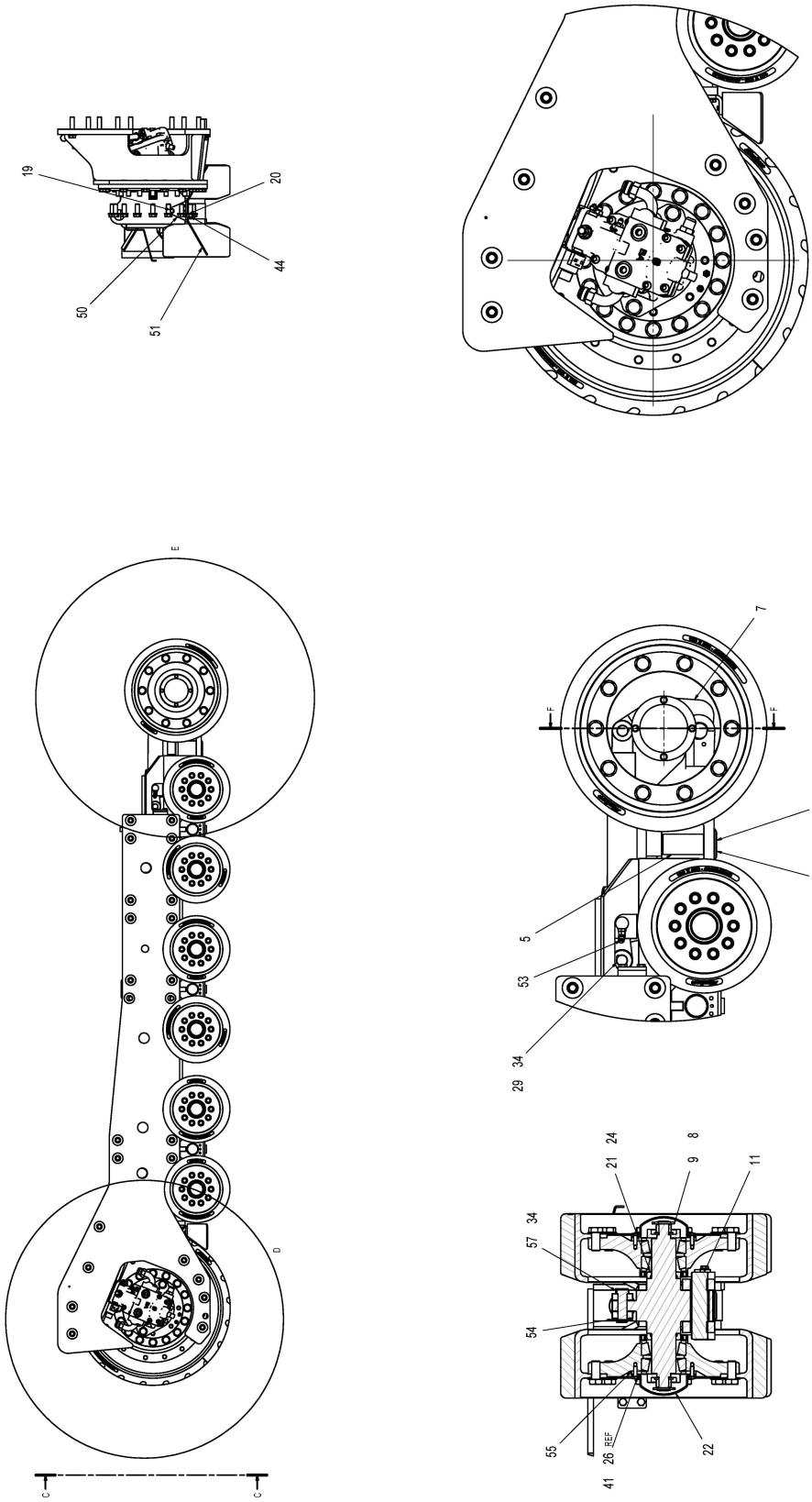
19
20
44
50
51
E
D
C
C
7
F
F
16
13
5
53
29 34
24
21
8
9
11
34
57
54
55
26 REF
22
41

Item	Part No.	Name	Qty	L	SN INFO
37	4812223126	Lock plate	3		
38	D717172928	Protective strip	2		
39	D717172929	Protective strip	2		
40	4812223296	Hexagon bolt	36		
41	0147132503	Hex head screw	8		
42	0147124703	Screw M6 x 20	2		
43	0147110836	Hexagon head screw	9		
44	0147136003	Hexagon bolt	13		
45	4812242548	Idler wheel	2		
46	4812242551	Drive wheel, LH	1		
47	4812221694	Stauff clamp	1		
48	D717104038	P clamp, 1.25'	1		
49	D938155547	Hexagon bolt	1		
50	4812223153	Dirt guard support	1		
51	4812223154	Dirt guard	1		
52	4812223152	Shim kit	24		
53	D717802619	Elbow	1		
54	4812242606	Washer	2		
55	4812240808	Spacer	2		
56	4812242562	Drive wheel, RH	1		
57	4812223434	Pin, tensioning cylinder rod end	1		
58	4812247915	Hose clip, track tensioning	1		
60	4812223500	Bolt	6		
61	D939776117	Flat washer	6		

Hydraulic component, assembly Hydraulic component, assembly

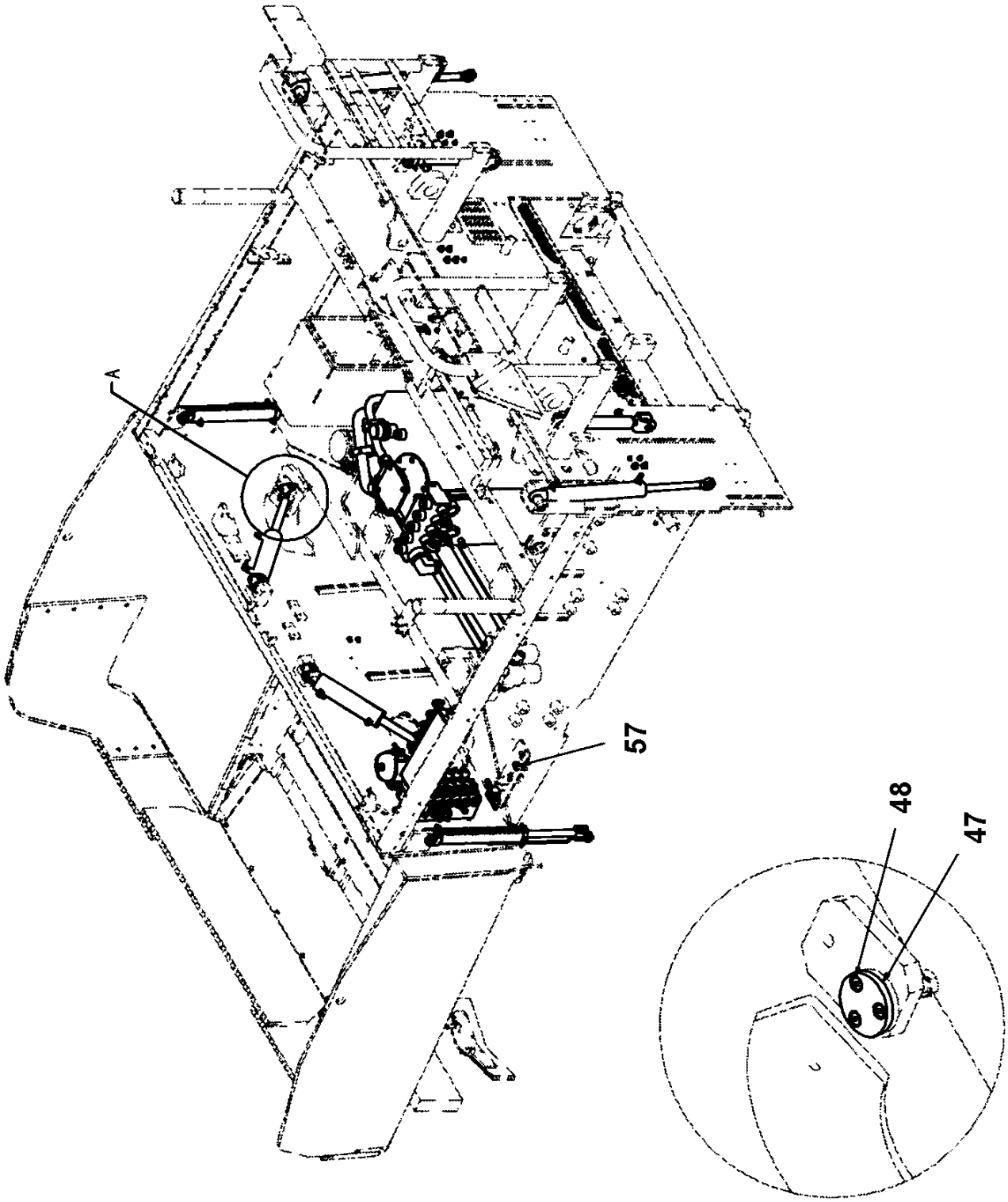

Item	Part No.	Name	Qty	L	SN INFO
1	D717091001	Auger lift cylinder	2		
2	D717091503	Cylinder, screed level, front	2		
3	4812220794	Cylinder, screed lift	2		
3_01	D717950757	Kit, gland seal	1		
3_02	D717950764	Kit, piston seal	1		
3_03	D717954747	Spherical bearing, cylinder	1		
4	D717091501	Cylinder, hopper pivot	2		
5		Accumulator, Track tension circuit	1		
5_01	D717090502	Accumulator, Track tension circuit	1		
5_02		Nitrogen gas	1		
6	4812220748	Filter, high-pressure	1		
6_01	4812220749	Element, high pressure filter	1		
6_02	4812269103	Kit, seal	1		
6_03	4812270280	Indicator	1		
7		Valve bank, rear, work function	1		
8		Front manifold	1		
9		HIC assy, propel gearbox & pump	1		
10		Valve assy, vibration	1		
11	4812220876	Filter, auger charge	1		
11_01	4812220885	Filter, replacement	1		
12		Assembly, hydraulic tank	1		
13	4812223436	Ring, external retaining	2		
14	4812223834	Pin, cylinder	4		
15	4812223835	Pin, screed front lift cylinder	2		
16	D717801177	Cotter pin, 3/16'	10		
17	4812223836	Pin, screed rear lift cylinder	2		
18	D717093506	Clamp, accumulator mounting	1		
19	0301234400	Washer plain	14		
20	0301233500	Plain washer(A) 8.4 x 16 x 1.6	16		
21	4812224056	Hexagon head bolt	6		
22	0147132303	Hex head screw M8 x 20	2		
23	0291118802	Hexagon nut	4		
24	4812240661	Hexagon head bolt	2		
25	D717800554	Screw, 5/16'	2		
26	D717800379	Elbow, 08-08	1		
27	D717800386	Tee, 08-08-04	1		
28	D717101509	Pressure switch	1		

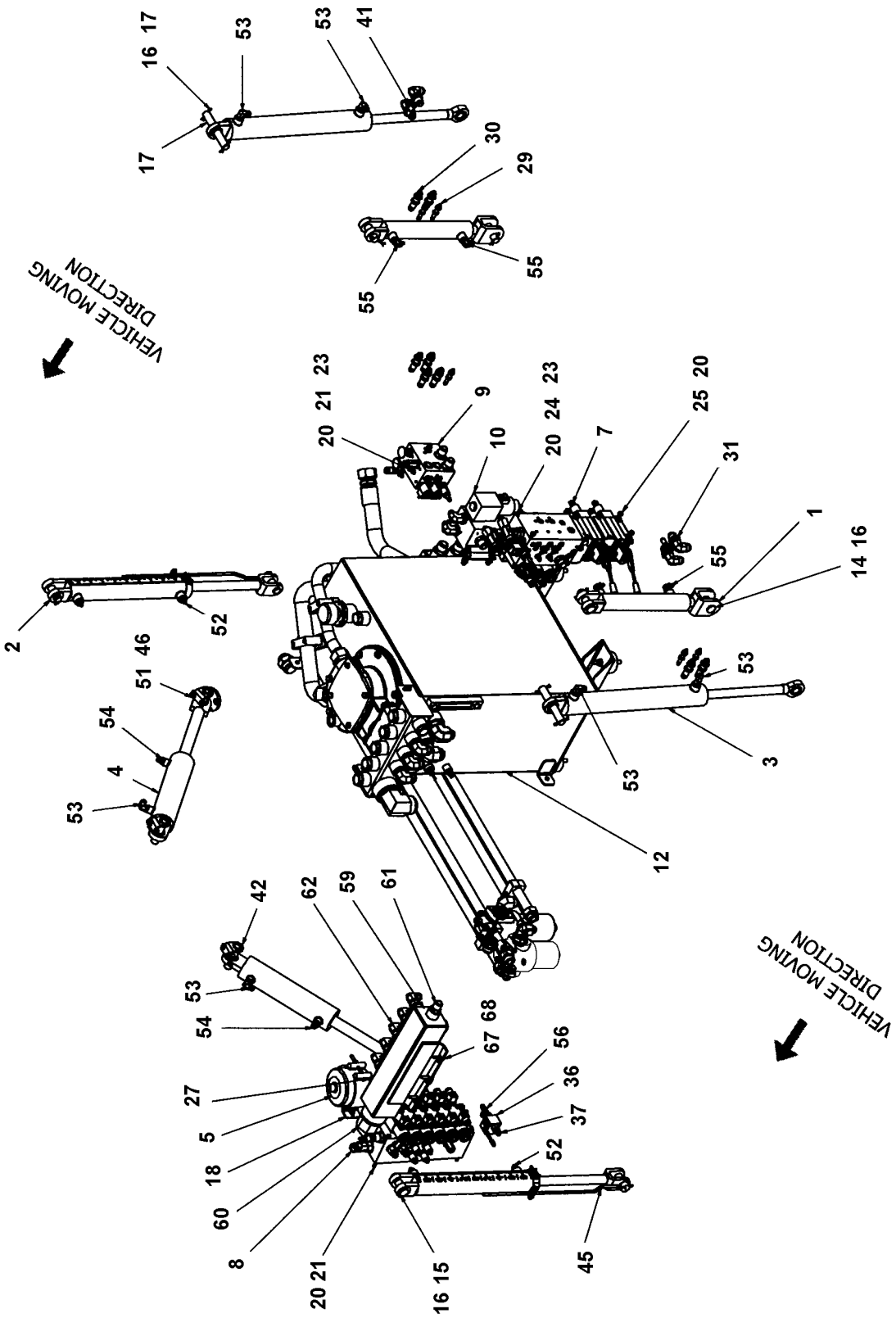
VEHICLE MOVING DIRECTION
VEHICLE MOVING DIRECTION
17
16
17
53
53
41
30
29
55
55
23
21
20
9
10
23
24
20
7
20
25
20
31
1
14
16
55
2
52
46
51
54
4
53
53
53
3
12
42
62
59
61
53
54
68
67
56
36
37
27
5
18
60
8
52
20
21
16
15
45

Item	Part No.	Name	Qty	L	SN INFO
29	D717091026	Bulkhead fitting, 04	5		
30	D717091027	Bulkhead fitting, 08	8		
31	4812200208	Bulkhead fitting, 12	4		
32	4812242922	Screw	6		
33	4812220889	Elbow, 16-20	1		
34	4812220890	Elbow, 16-20	1		
35	4812220793	Schematic, hydraulic	1		
36	4812220182	Ball valve	1		
37	4812220181	Check valve	1		
39	4812220864	Clamp, stauff	4		
40	4812220870	Tube	4		
41	D717801989	Adapter, 06-06	2		
42	4812223742	Pin	4		
43	0147196264	Hex. head screw	4		
44	0291118549	Hexagon nut	4		
45		Assembly, tow point indicator	1		
46	D939776115	Washer	4		
47	4812240660	Rubber pad	2		
48	0216195748	Hexagon socket countersunk head screw ISO 10642 - M8x20	6		
49	4812221096	Elbow, 20-12-90	1		
50	D717800001	Adapter, 20-12	1		
51	4812223284	Hexagon bolt	4		
52	4812200062	Straight	4		
53	D717800344	Elbow	6		
54	D717800372	Adapter	2		
55	D717800365	Elbow	4		
56	4812200201	Adapter, 06-06-06	1		
57	4812200055	Plug	1		
58		Hose kit	1		
59	4812243585	Case drain manifold	1		
60	4812220911	Elbow, 32-24	1		
61	D717800066	Adapter, 12-12	8		
62	D717801912	Elbow, 12-12	7		
63	D717802304	Hex plug	2		
64	4812200413	Adapter, 24-20	2		
65	4812220868	Adapter, 32-24	1		
66	D717800295	6MORB-6MJ90	1		

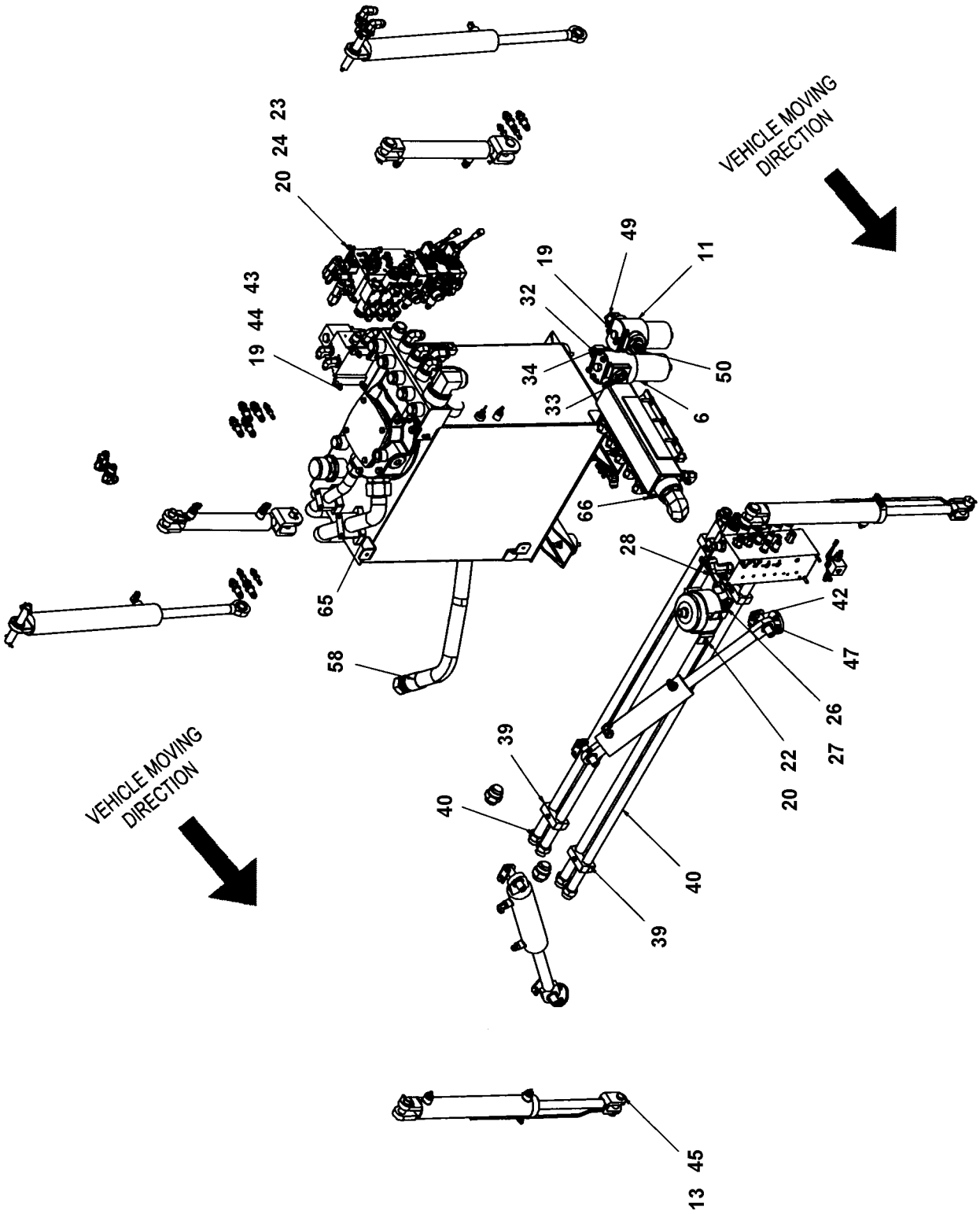
VEHICLE MOVING DIRECTION
VEHICLE MOVING DIRECTION
23
24
20
43
44
19
19
32
34
33
49
11
50
6
66
65
58
28
42
47
26
27
22
20
39
40
40
39
45
13

Item	Part No.	Name	Qty	L	SN INFO
67	0147196044	Hexagon head screw	3		
68	D939570014	Washer	3		
69	4812246733	Case drain manifold assembly	1		

Hydraulic component, assembly D717091001 Auger lift cylinder

NO DRAWING AVAILABLE FOR THIS BOM

Item	Part No.	Name	Qty	L	SN INFO
1	D717950743	Kit, gland seal	1		
2	D717950771	Kit, piston seal	1		

Hydraulic component, assembly D717091503 Cylinder, screed level, front

NO DRAWING AVAILABLE FOR THIS BOM

Item	Part No.	Name	Qty	L	SN INFO
1	D717950757	Kit, gland seal	1		
2	D717950764	Kit, piston seal	1		

Hydraulic component, assembly D717091501 Cylinder, hopper pivot

NO DRAWING AVAILABLE FOR THIS BOM

Item	Part No.	Name	Qty	L	SN INFO
1	D717950750	Kit, gland seal	1		
2	D717951639	Kit, piston seal	1		

Hydraulic component, assembly Accumulator, Track tension circuit

NO DRAWING AVAILABLE FOR THIS BOM

Item	Part No.	Name	Qty	L	SN INFO
1	D717090502	Accumulator, Track tension circuit	1		
2		Nitrogen gas	1		

Valve bank, rear, work function Valve bank, rear, work function

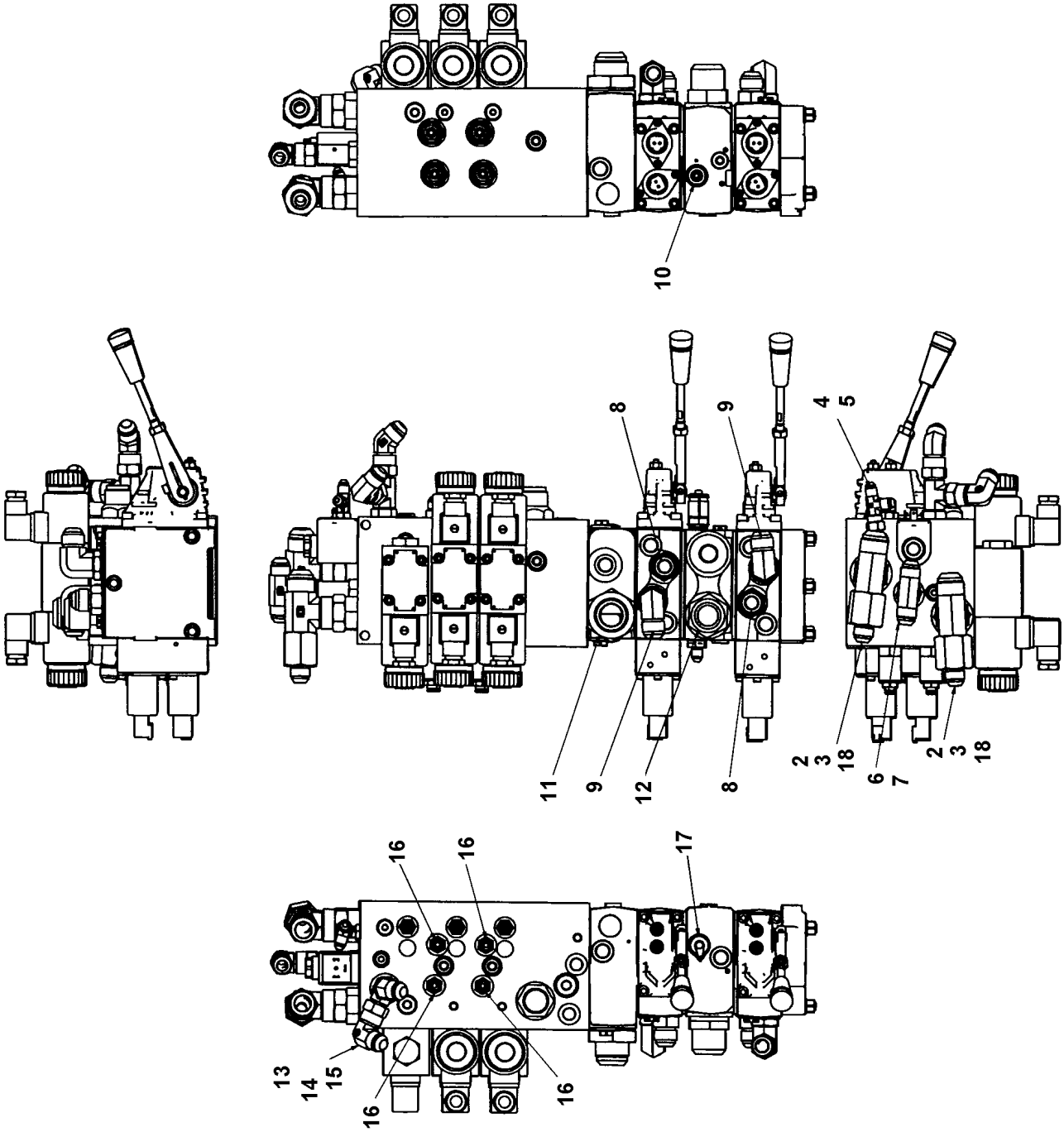

Item	Part No.	Name	Qty	L	SN INFO
1	D717091507	Valve bank, rear work function	1		
2	D717800066	Adapter, 12-12	2		
3	4812200209	Fitting	2		
4	D717800029	Adapter, elbow	1		
5	D717800043	Adapter	1		
6	4812200410	Adapter	1		
7	4812200403	Fitting	1		
8	D717800057	Adapter, 10-10	2		
9	D717800064	Elbow	2		
10	D717800281	Straight	1		
11	4812200054	Adapter, 16-16	1		
12	D717800218	Adapter, 16-16	1		
13	4812221095	Run tee, 08-08-08	1		
14	D717800393	Adapter	1		
15	4812200113	Elbow, 08-08	1		
16	D717800246	Adapter, 04-04	4		
17	D717090505	Test port, male	1		
18	D717801401	Adapter	2		

D717091507 Valve bank, rear work function D717091507 Valve bank, rear work function

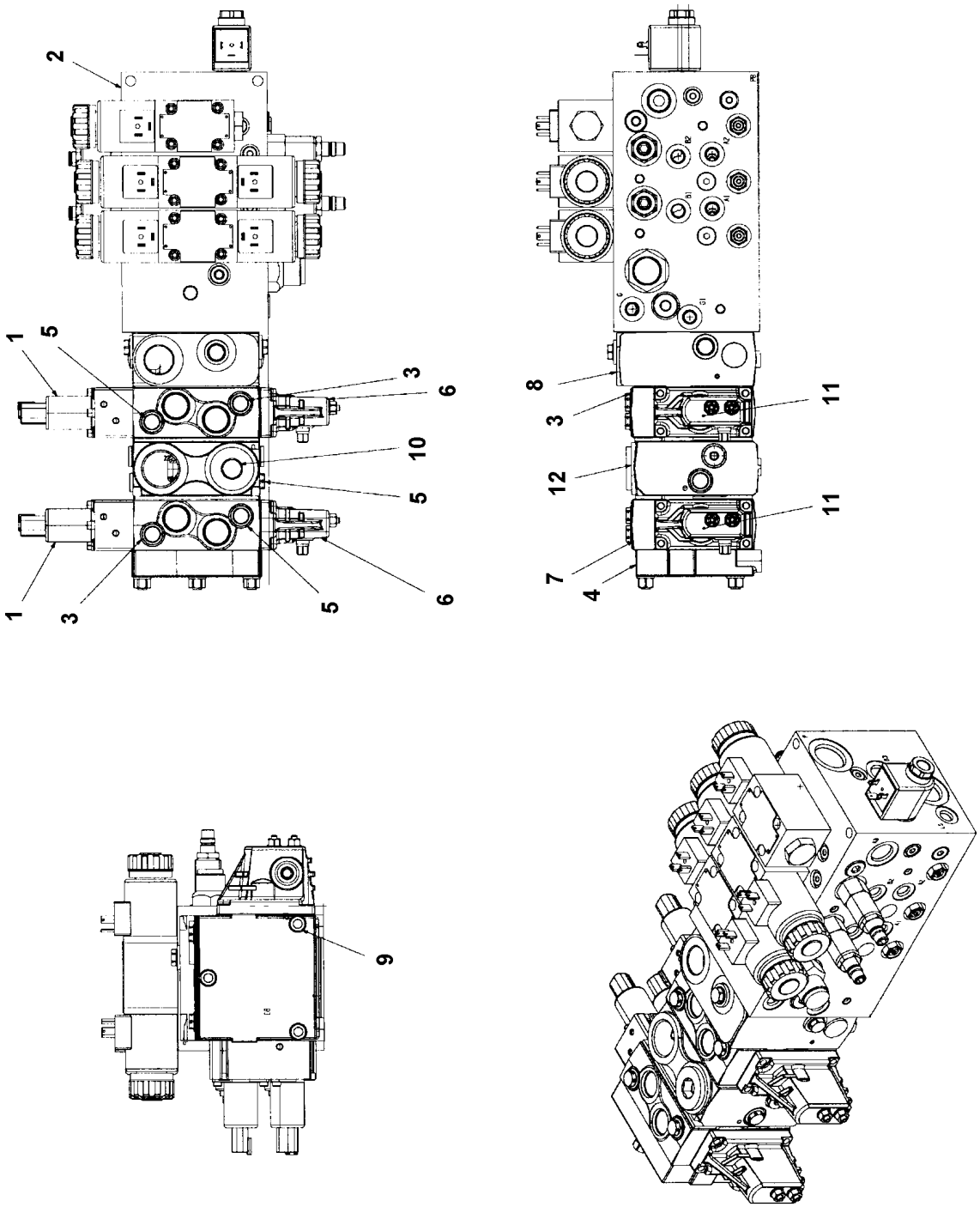

Item	Part No.	Name	Qty	L	SN INFO
1	D717953690	PVHC	2		
2	-	HIC, rear valve	1		
3	D717953739	Anti-cav valve	2		
4	D717953746	PVSI	1		
5	D717953753	Shock valve	3		
6	D717953760	PVM	2		
7	-	PVB	2		
8	D717953774	PVSPM	1		
9	D717953781	Tie rod assembly	1		
10	D717953788	Spool	2		
11	D717952857	Plug	1		
12	-	Pilot, PVPVW	1		

D717091507 Valve bank, rear work function D717953711 HIC, rear valve

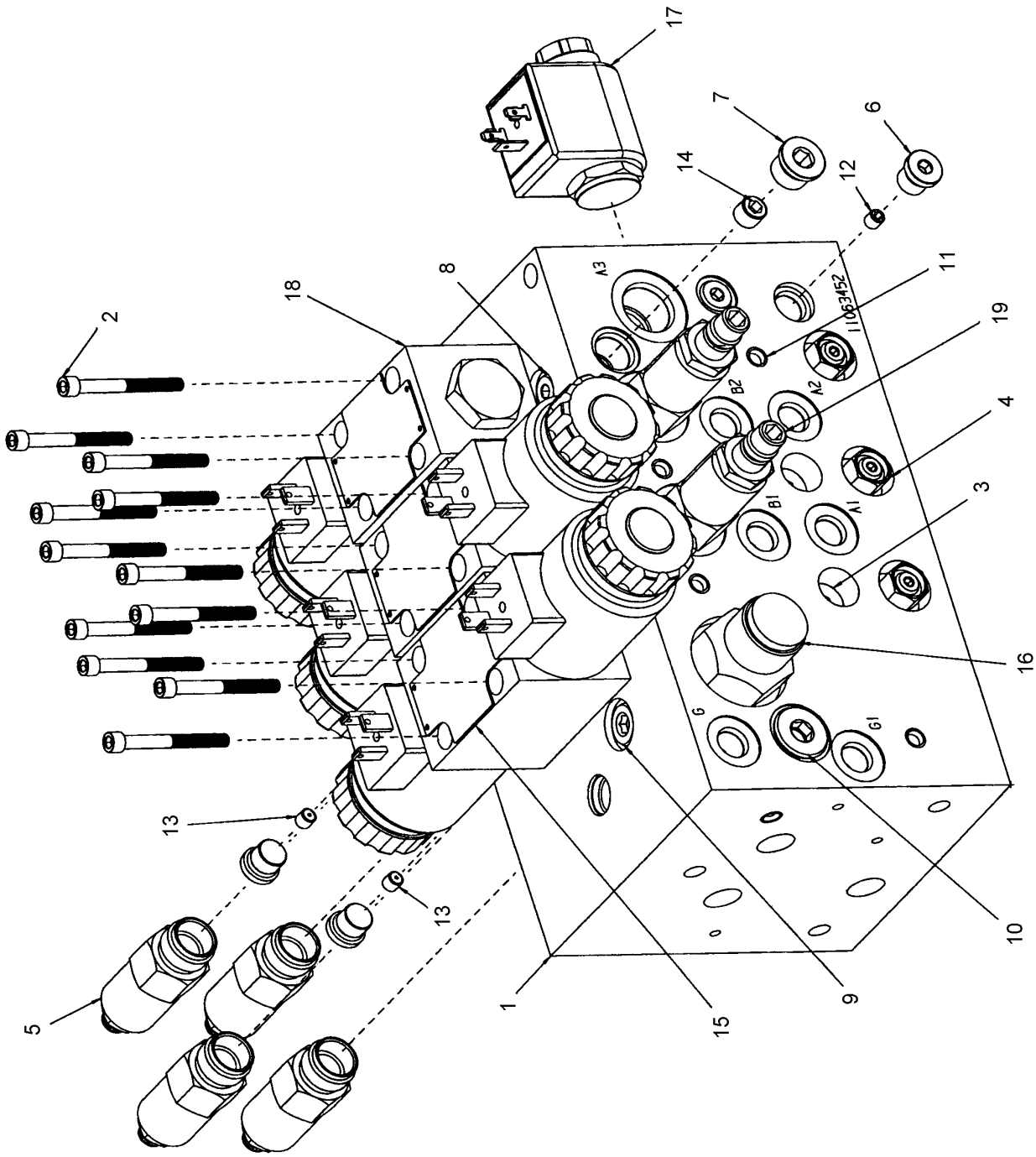

Item	Part No.	Name	Qty	L	SN INFO
1	4812270266	Body	1		
2	-	Cap screw	12		
3	4812270268	CP124-1-V-0	2		
4	4812270269	3C100-01-V-0-005	3		
5	4812270270	CP448-1-V-0-E-C-300-3.0-040	4		
6	-	Plug, straight	3		
7	-	Plug, straight	1		
8	4812270273	Plug, 4 sae, tapered, buna	6		
9	4812270274	Plug, 6 sae, tapered, buna	8		
10	4812270275	Plug, 8 sae, tapered, buna	2		
11	-	Plug, expander 8mm	19		
12	4812270277	Plug, orifice M6X1	1		
13	4812270278	Plug, orifice M6X1	2		
14	4812270217	Plug, orifice	1		
15	4812270218	DCV03-3Y11/02400-E1-00-V	2		
16	4812270219	CP231-3-V-0-A-D-300	1		
17	4812270220	Valve, SVP08	1		
18	4812270221	DCV03-2Y51/02400-E1-00-V	1		
19	4812270222	CP208-1-V-0-E-B-150	2		

Front manifold Front manifold

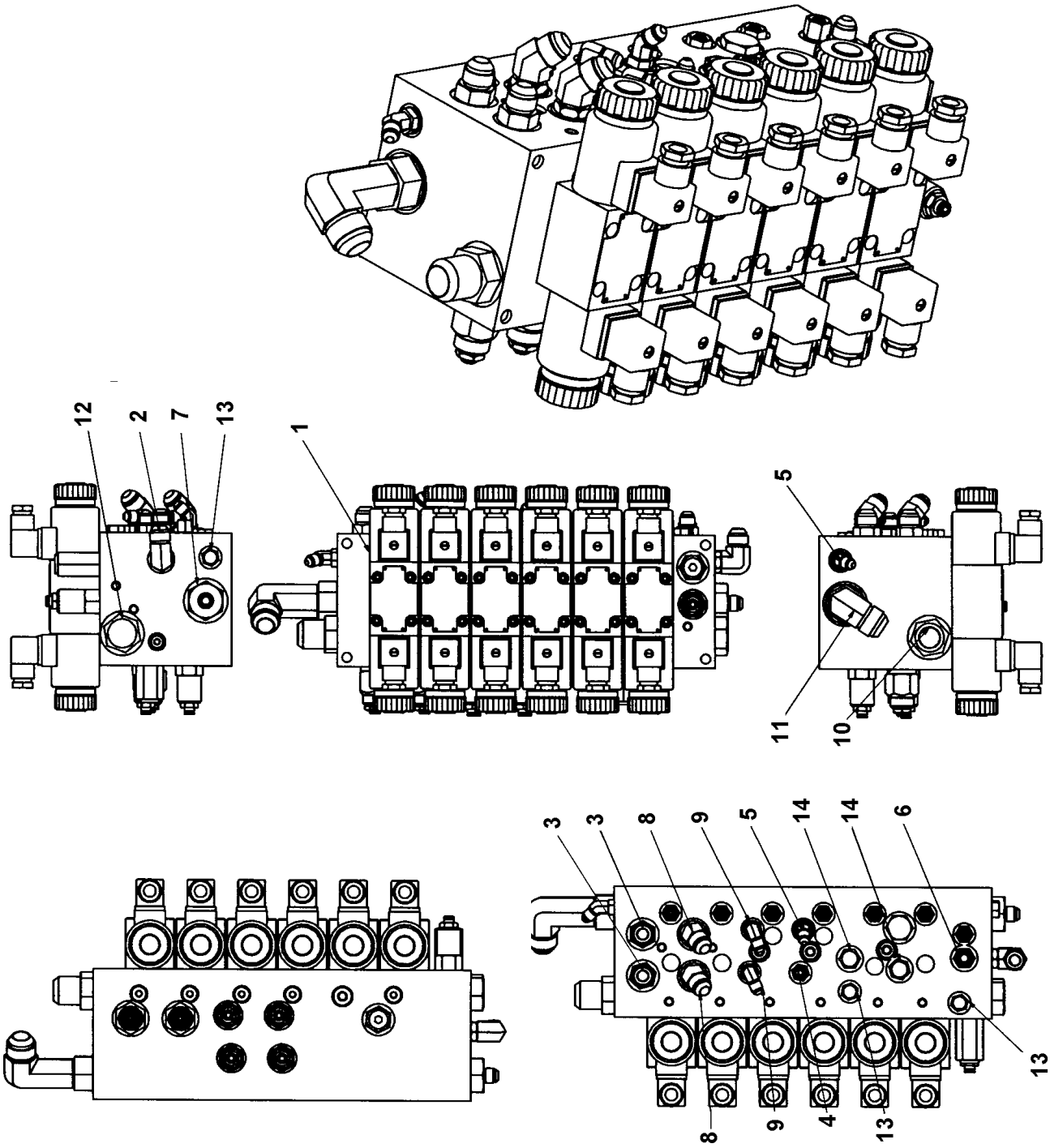

Item	Part No.	Name	Qty	L	SN INFO
1	4812200104	Front HIC assembly	1		
2	4812200197	Elbow	1		
3	D717800372	Adapter	2		
4	D717800246	Adapter, 04-04	1		
5	D717801415	Elbow	2		
6	D717800323	Adapter	1		
7	4812200061	Adapter, 06-12	1		
8	D717800379	Elbow, 08-08	2		
9	D717800029	Adapter, elbow	2		
10	D717800066	Adapter, 12-12	1		
11	4812200198	Straight	1		
12	D717802304	Hex plug	1		
13	D717802276	External plug, 04	3		
14	D717802290	Plug, hex head	4		

Front manifold 4812200104 Front manifold

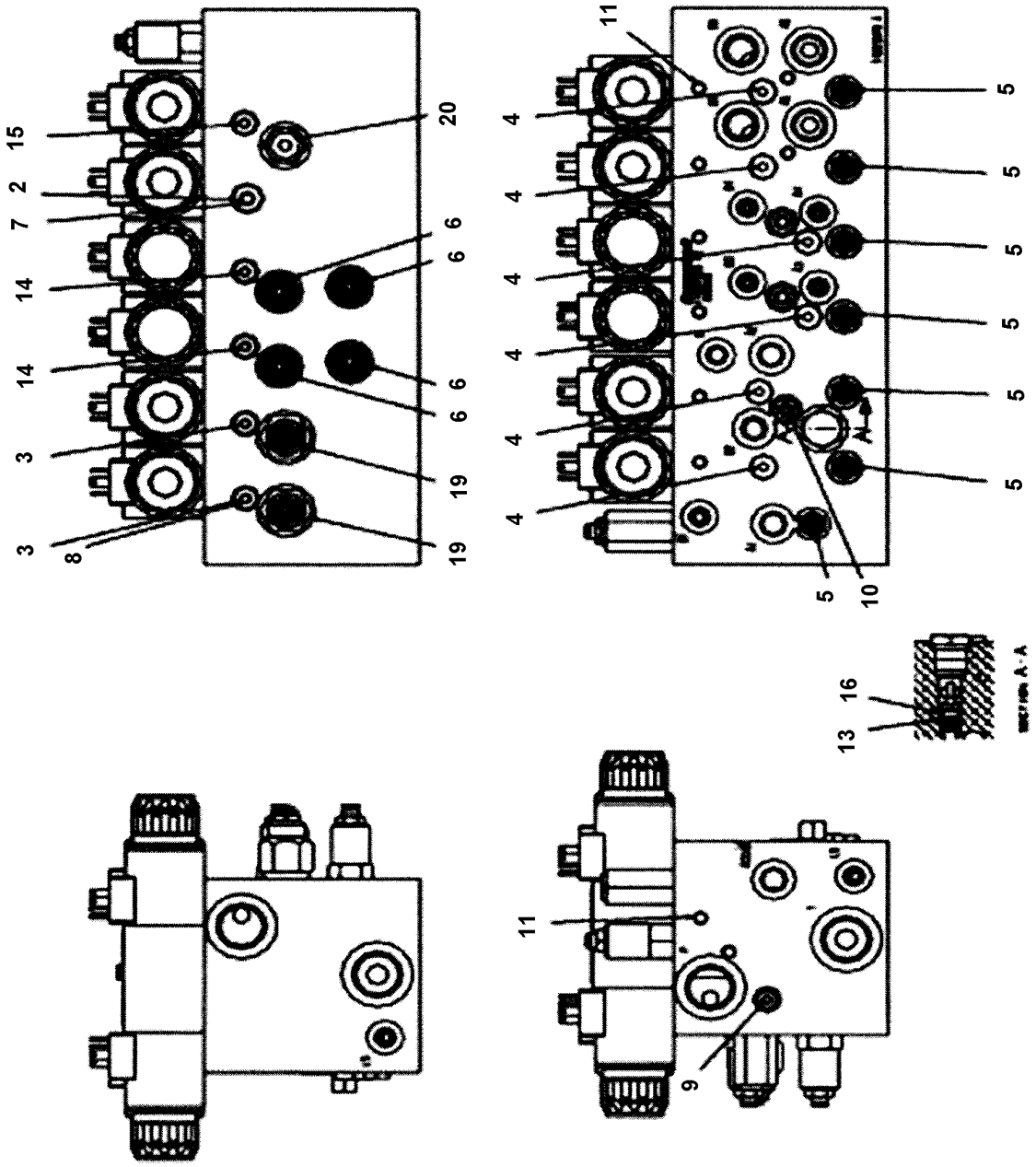

Item	Part No.	Name	Qty	L	SN INFO
1	-	Manifold body	1		
2	-	Orifice plug	1		
3	-	Orifice plug	2		
4	D717952703	Valve, CP124	6		
5	D717952710	Valve, 3C100	7		
6	D717952717	Valve, CP448	4		
7	D717952843	Plug, 6 SAE	1		
8	D717952850	Plug, 4 SAE	5		
9	D717952864	Tapered plug, 4 SAE	7		
10	D717952871	Plug	5		
11	-	Expander plug	33		
12	D717952885	Cap screw	24		
13	D717953039	Piston	1		
14	D717953046	Orifice plug	2		
15	D717953053	Orifice plug	1		
16	D717953081	Backup	2		
17	D717953795	Valve, DCV03	4		
18	D717953802	Valve, CP448	1		
19	D717953809	Valve, CB10	2		
20	D717953816	Valve, CP208	1		
21	D717953823	Valve, CP208	1		
22	D717954173	Valve, CV08	2		
23	4812269085	Valve, CV08	1		

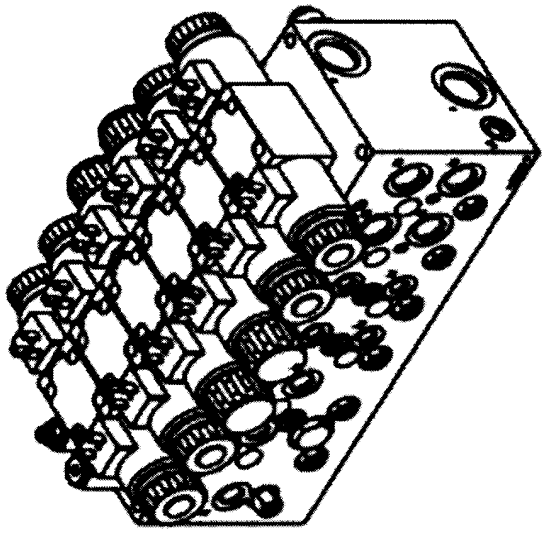

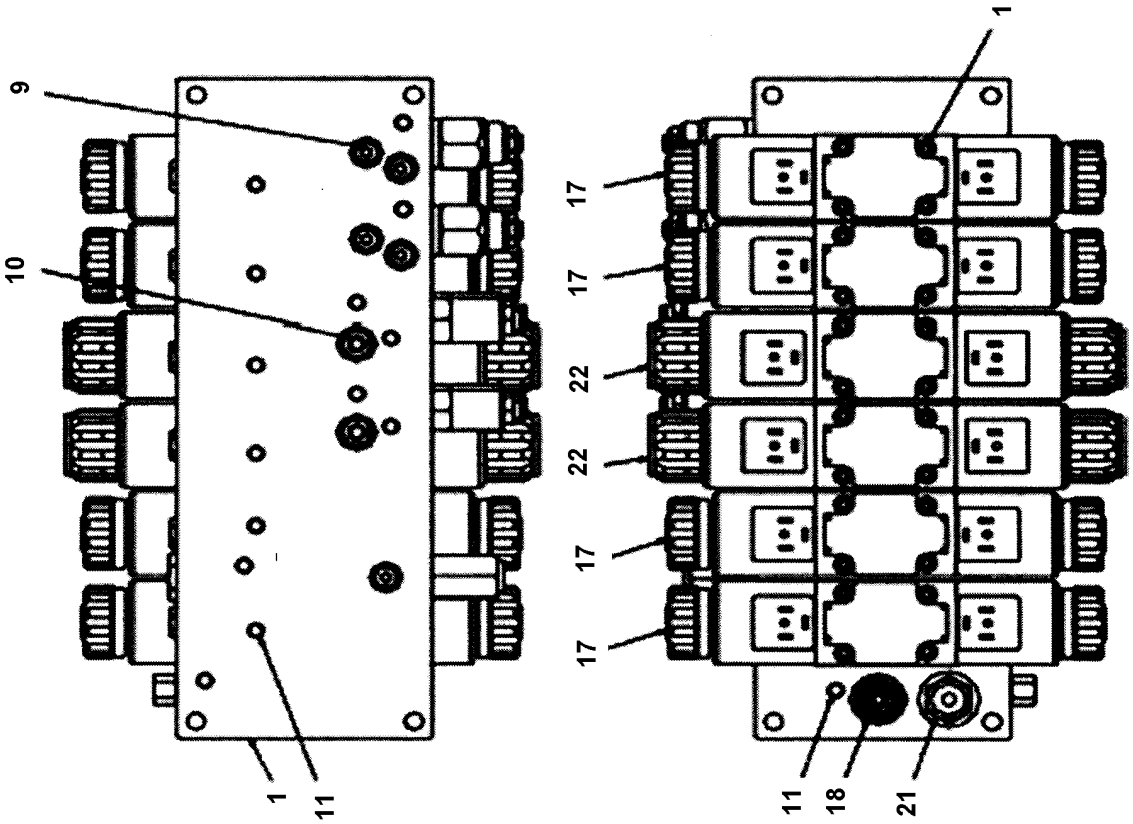
9
10
1
11
1
17
17
22
22
17
17
11
18
21

This page intentionally left blank

HIC assy, propel gearbox & pump HIC assy, propel gearbox & pump

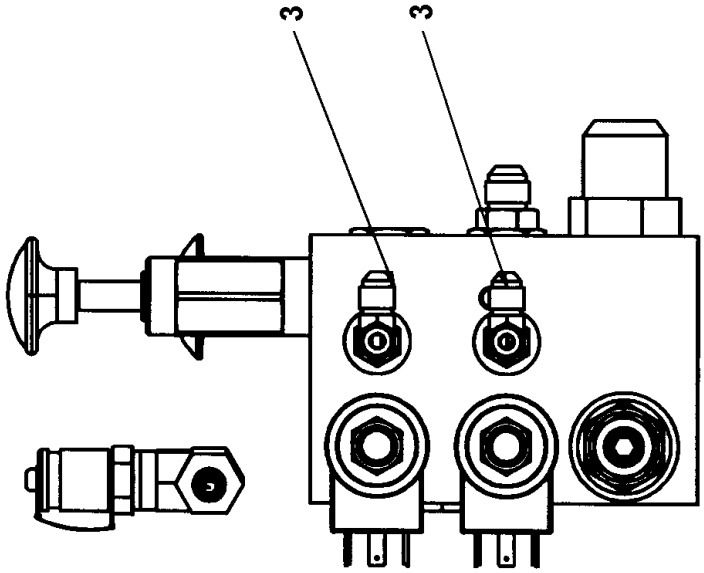

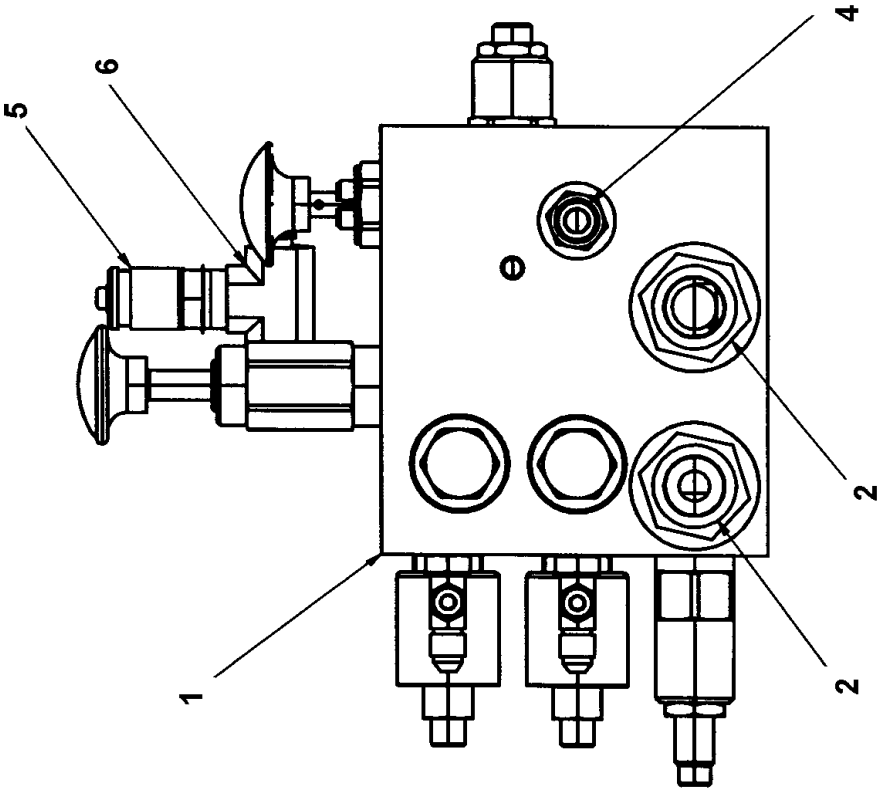

Item	Part No.	Name	Qty	L	SN INFO
1	D717090503	HIC, Propel gearbox & pump	1		
2	D717800066	Adapter, 12-12	2		
3	D717800260	Run tee, 04-04-04	2		
4	D717800323	Adapter	1		
5	D717090505	Test port, male	1		
6	D717800015	Straight	1		

HIC assy, propel gearbox & pump D717090503 HIC,propel gearbox & pump

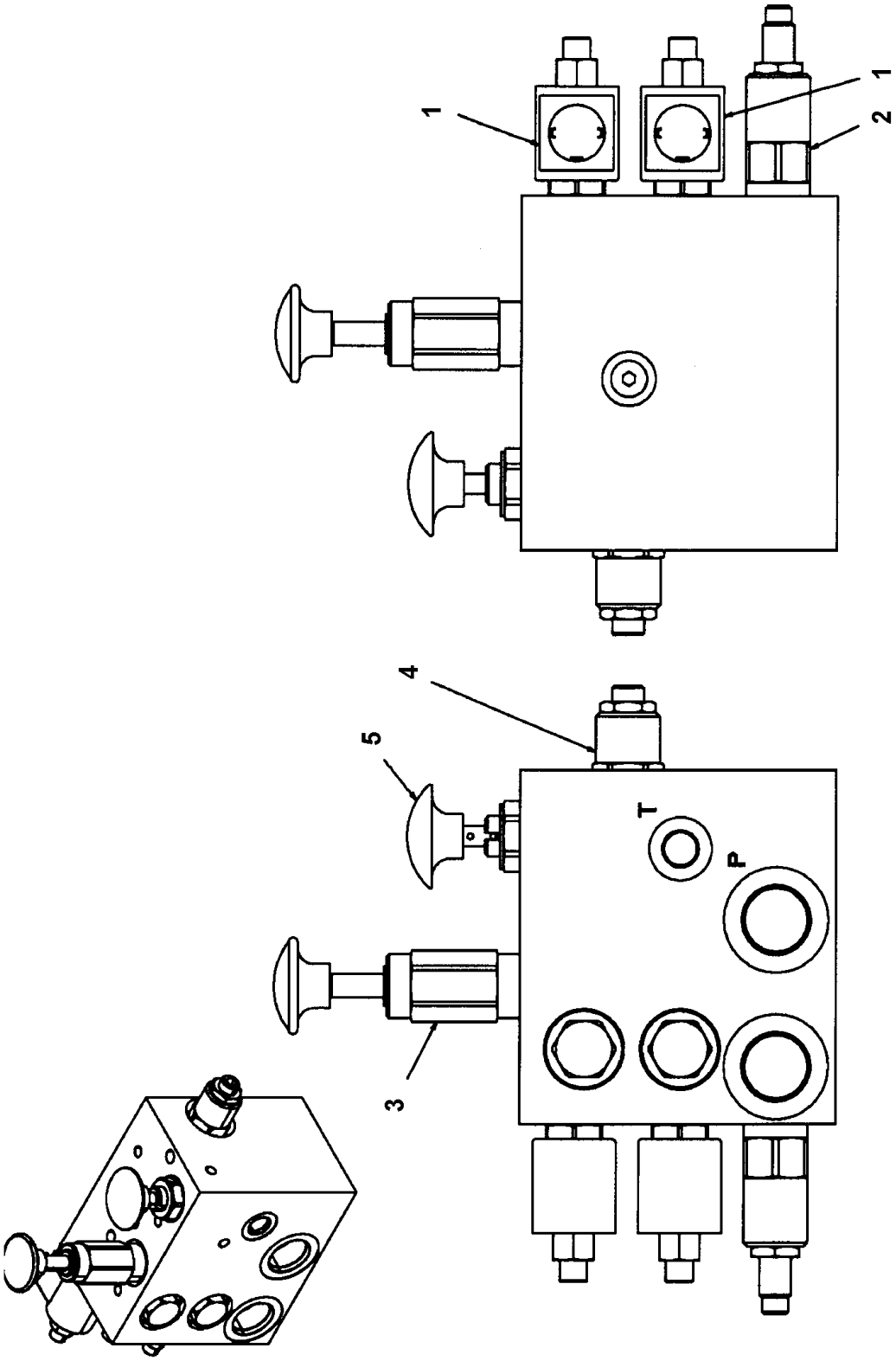

Item	Part No.	Name	Qty	L	SN INFO
1	D717950148	Cartridge valve	1		
2	D717950155	Relief limiting pilot valve	1		
3	D717950162	Hand pump valve	1		
4	D717950169	Motion control valve	1		
5	D717950708	Manual directional valve	1		

Valve assy, vibration Valve assy, vibration

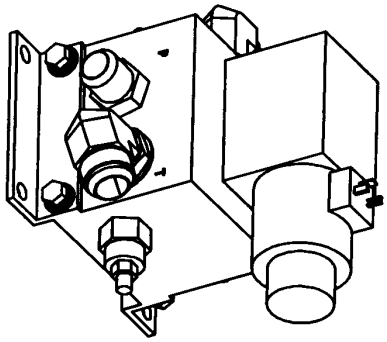

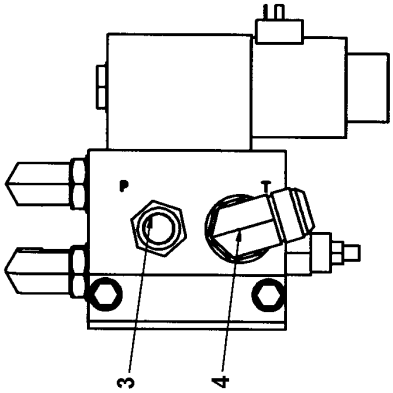

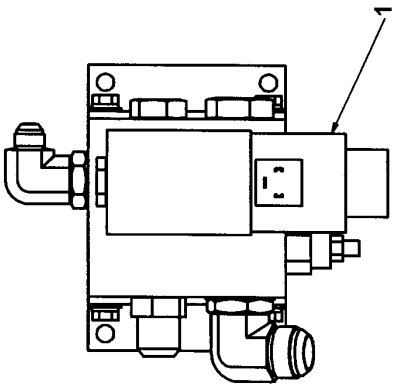

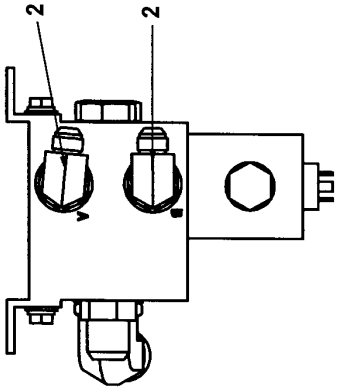

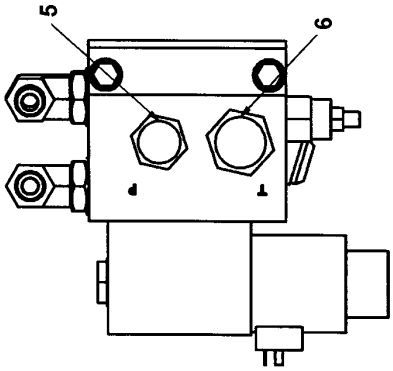

Item	Part No.	Name	Qty	L	SN INFO
1	D717091508	Valve, vibration	1		
2	D717800113	Elbow, 12-12	2		
3	D717800066	Adapter, 12-12	1		
4	D717800176	Elbow, 16-16	1		
5	D717802304	Hex plug	1		
6	D717801968	Plug, 16	1		

Valve assy, vibration D717091508 Valve, vibration

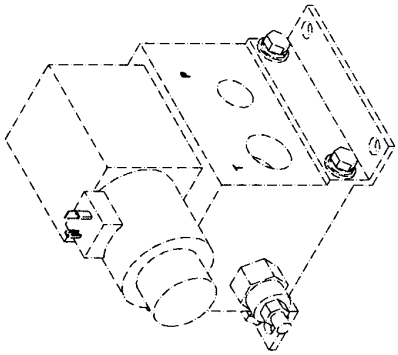

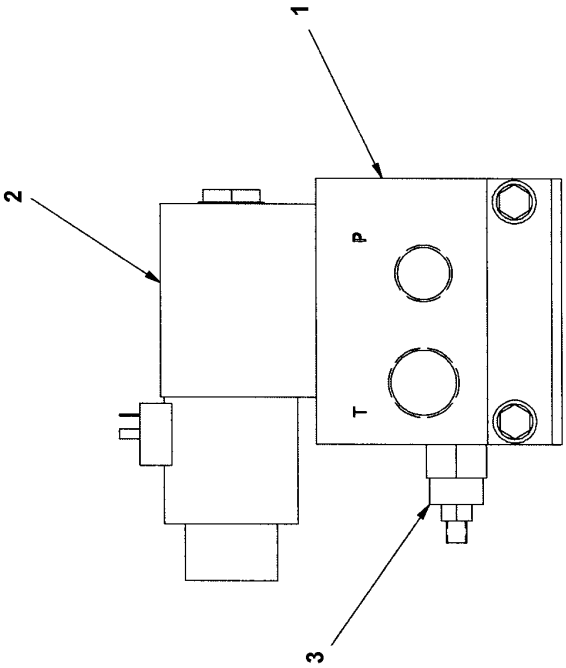

Item	Part No.	Name	Qty	L	SN INFO
1	D717950652	Manifold	1		
2	D717950715	Solenoid	1		
3	D717950722	Valve, cartridge relief	1		

Hydraulic component, assembly 4812220876 Filter, auger charge oil

NO DRAWING AVAILABLE FOR THIS BOM

Item	Part No.	Name	Qty	L	SN INFO
1	4812220885	Filter, replacement	1		

Assembly, hydraulic tank Assembly, hydraulic tank

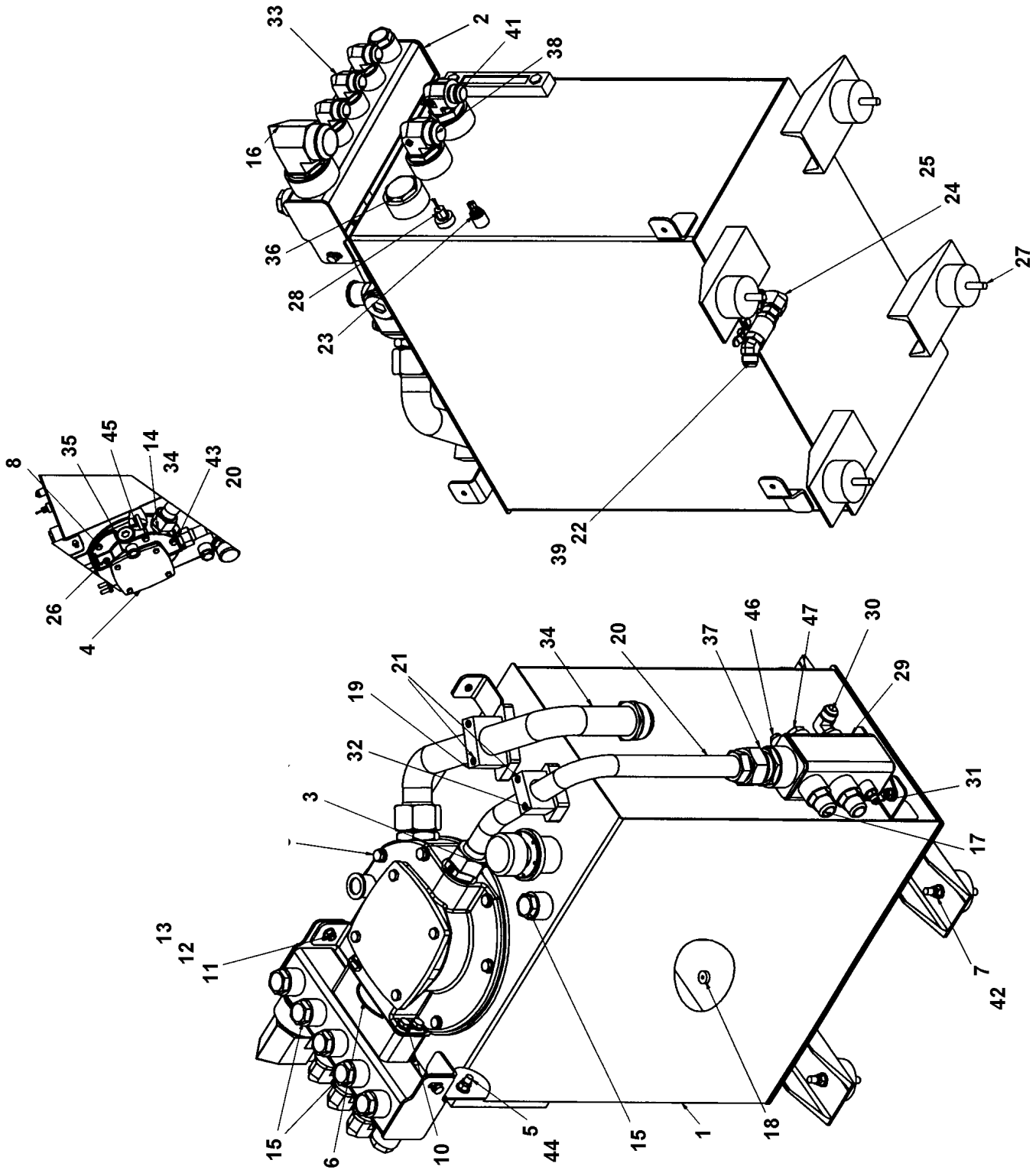

Item	Part No.	Name	Qty	L	SN INFO
1	4812223302	Hydraulic tank	1		
2	4812220782	Hydraulic suction	1		
3	4812223965	Cap, tank fill	1		
4	4812220770	Hydraulic filter	1		
4_01	D717951135	Kit, seal rkm400	1		
4_02	D717951142	Indicator	1		
4_03	4812220771	Element, filter	1		
5	D717084545	Gauge, hydraulic sight	1		
6	D717084546	O-ring, suction manifold seal	1		
7	0301235800	Plain washer(A) 13 x 24 x 2.5	18		
8	0147140003	Screw DIN933	4		
9	0147141703	Hex head screw M12 x 110	2		
10	0147140203	Hex head screw M12 x 35	4		
11	0301234400	Washer plain	8		
12	0291118549	Hexagon nut	4		
13	4812223295	Hexagon bolt	4		
14	D717802038	Adapter, 1/2'-32	1		
15	D717801968	Plug, 16	7		
16	D717800008	Elbow, 32-32	1		
17	D717800218	Adapter, 16-16	2		
18	D717084548	Magnet	1		
19	D717084551	Stauff clamp, 2'	1		
20	4812223828	Tube, hydraulic return	1		
20_01	4812200527	Adapter	1		
20_02	4812200528	Adapter	1		
20_03	4812200529	Adapter	1		
21	0211196498	Hexagon socket head cap screw	4		
22	D717080023	Ball valve	1		
23	D717084554	Temperature sensor	1		
24	4812220143	Elbow, 12	1		
25	4812220142	Nipple, 12	1		
26	4812200120	Plug, 1/4'	1		
27	4812220689	Hydraulic tank isolator	4		
28	4812220734	Temperature sensor	1		
29	4812223829	Return manifold	1		
30	D717800085	Elbow, 12-12	1		
31	D717800323	Adapter	1		

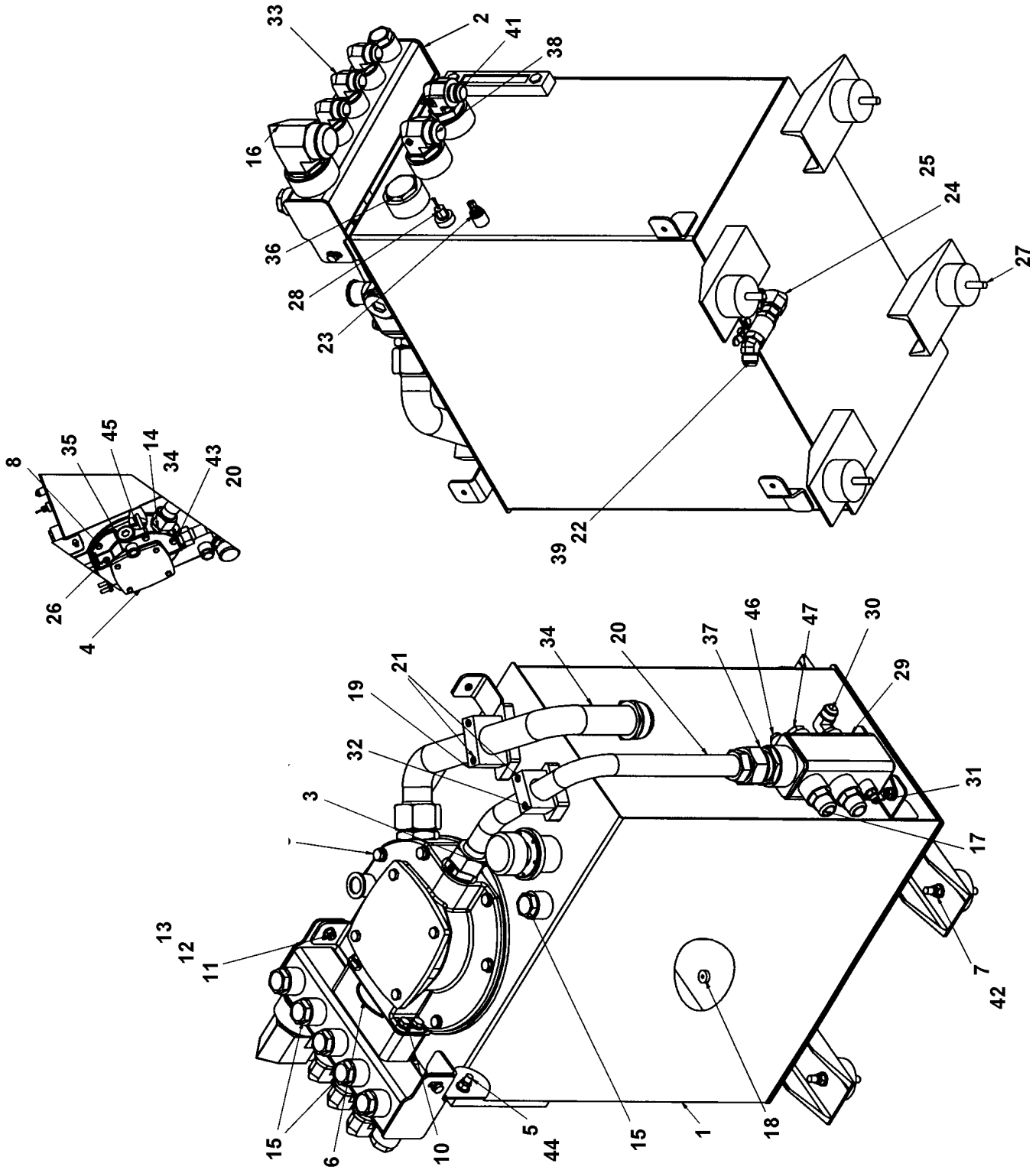
33
2
41
38
16
36
28
23
25
24
27
39
22
8
35
45
14
34
43
20
26
4
34
20
37
46
47
30
29
21
19
32
3
31
17
13
12
11
7
42
15
6
10
5
44
15
1
18

Item	Part No.	Name	Qty	L	SN INFO
32	4812220780	Clamp, stauff	1		
33	D717800176	Elbow, 16-16	3		
34	4812220789	Tube, hydraulic oil cooler	1		
35	D717802059	Plug, 24	1		
36	4812241758	Plug	1		
37	4812220801	Adapter	1		
38	4812200441	Elbow, 20-24	1		
39	4812220804	Elbow, 3/4-12	1		
41	4812220806	Elbow, 16-24	1		
42	4812220807	Nut, M12	4		
43	4812221916	Adapter, 24-24	1		
44	0291111200	Lock nut	2		
45	4812221201	O-ring	1		
46	D717802290	Plug, hex head	1		
47	D717802304	Hex plug	1		

Assembly, hydraulic tank 4812220770 Assembly, hydraulic filter tier IV

NO DRAWING AVAILABLE FOR THIS BOM

Item	Part No.	Name	Qty	L	SN INFO
1	D717951135	Kit, seal rkm400	1		
2	D717951142	Indicator	1		
3	4812220771	Element, filter	1		

Hydraulic component, assembly Assembly, tow point indicator

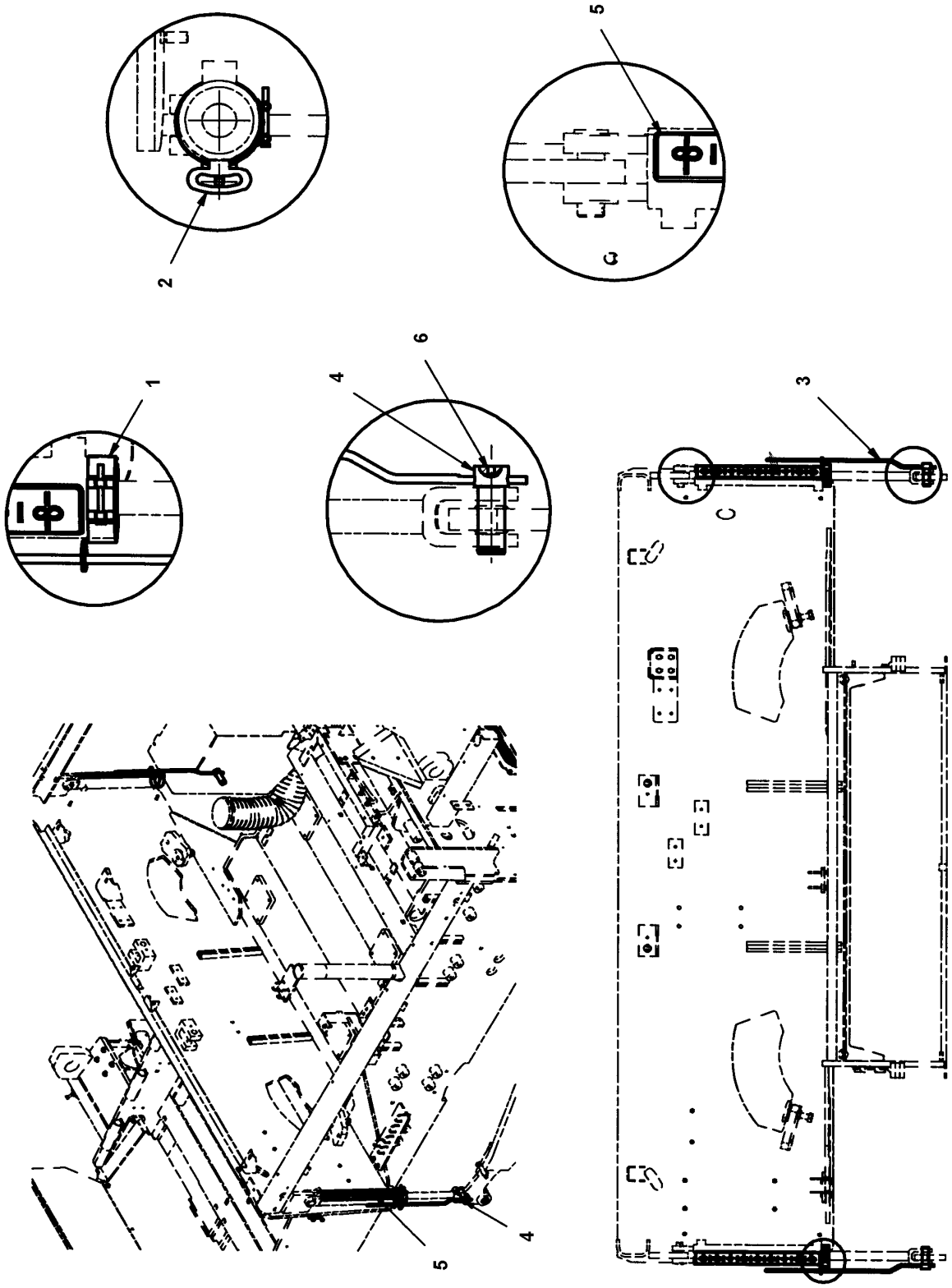

Item	Part No.	Name	Qty	L	SN INFO
1	4812222588	Clamp, 3 1/8'	2		
2	4812223840	Bracket	2		
3	4812223841	Display rod	2		
4	4812223842	Pin	2		
5	4812222593	Decal, screed leveling ruler	2		
6	4749900236	Threaded pin	2		

Hydraulic component, assembly Hose kit

NO DRAWING AVAILABLE FOR THIS BOM

Item	Part No.	Name	Qty	L	SN INFO
1	D717920002	Hose assembly, #1, 08	1		
2	D717920009	Hose assembly, #2, 12	1		
3	D717920016	Hose assembly, #3, 12	1		
4	D717920023	Hose assembly, #4, 04	1		
5	D717920030	Hose assembly, #5, 08	1		
6	D717920037	Hose assembly, #6, 08	1		
7	D717920079	Hose assembly, #14, 08	2		
8	D717920086	Hose assembly, #15, 08	2		
9	D717920156	Hose assembly, #28, 04	2		
10	D717920163	Hose assembly, #29, 04	2		
11	D717920177	Hose assembly, #33, 04	1		
12	D717920191	Hose assembly, #35, 04	1		
13	4812200411	Hose assembly	1		
14	4812200397	Hose assembly	1		
15	D717920219	Hose assembly, #39, 04	1		
16	D717920226	Hose assembly	1		
17	4812200360	Hose assembly	1		
18	D717920352	Hose assembly, #63, #64, 10	1		
19	D717920625	Hose assembly, #113, 04	1		
21	4812200329	Hose assembly	1		
22	4812200330	Hose assembly	1		
23	D717920331	Hose assembly, #59, 08	1		
24	4812200331	Hose assembly	2		
25	4812200332	Hose assembly	2		
26	4812200333	Hose assembly	1		
27	4812200334	Hose assembly	1		
28	4812200399	Hose assembly	1		
29	4812200335	Hose assembly	1		
30	4812200336	Hose assembly	2		
31	4812200337	Hose assembly	1		
32	4812200338	Hose assembly	1		
33	4812200339	Hose assembly	2		
34	4812200340	Hose assembly	1		
35	4812200341	Hose assembly	1		
36	4812200342	Hose assembly	1		
37	4812200456	Hose assembly	1		
38	4812200344	Hose assembly	1		

NO DRAWING
AVAILABLE
FOR THIS BOM

Item	Part No.	Name	Qty	L	SN INFO
39	4812200345	Hose assembly	1		
40	4812200346	Hose assembly	1		
41	4812200347	Hose assembly	1		
42	4812200348	Hose assembly	1		
43	4812200349	Hose assembly	1		
44	4812200350	Hose assembly	1		
45	4812200351	Hose assembly	2		
46	4812200352	Hose assembly	1		
47	4812200457	Hose assembly	1		
48	4812200354	Hose assembly	1		
49	4812200355	Hose assembly	1		
50	4812200356	Hose assembly	1		
51	4812200357	Hose assembly	2		
52	4812200358	Hose assembly	1		
53	4812243679	Hose	1		
54	4812200463	Hose assembly	1		
55	4812243678	Hose	1		
56	4812200361	Hose assembly	1		
57	4812200458	Hose assembly	1		
58	4812243684	Hose	1		
59	4812243685	Hose	1		
60	4812200366	Hose assembly	1		
61	4812200367	Hose assembly	1		
62	4812200368	Hose assembly	1		
63	4812200369	Hose assembly	1		
64	4812200370	Hose assembly	1		
65	4812200371	Hose assembly	1		
66	4812200460	Hose assembly	1		
67	4812200461	Hose assembly	1		
68	4812200374	Hose assembly	2		
69	4812200375	Hose assembly	1		
70	4812200376	Hose assembly	1		
71	4812200462	Hose assembly	1		
72	4812200378	Hose assembly	1		
73	4812200380	Hose assembly	1		
74	4812200362	Hose assembly	1		
75	4812200382	Hose assembly	2		

NO DRAWING
AVAILABLE
FOR THIS BOM

Item	Part No.	Name	Qty	L	SN INFO
76	4812200383	Hose assembly	1		
77	4812243688	Hose	1		
82	4812200514	Hose assembly	1		
83	4812200515	Hose assembly	1		
84	4812200509	Hose assembly	1		
85	4812200464	Hose assembly	1		
86	4812200465	Hose assembly	1		
87	4812222301	Hose assy, -24X46	1		
88	4812243693	Hose	1		

Hydraulic component, assembly Case drain manifold assembly

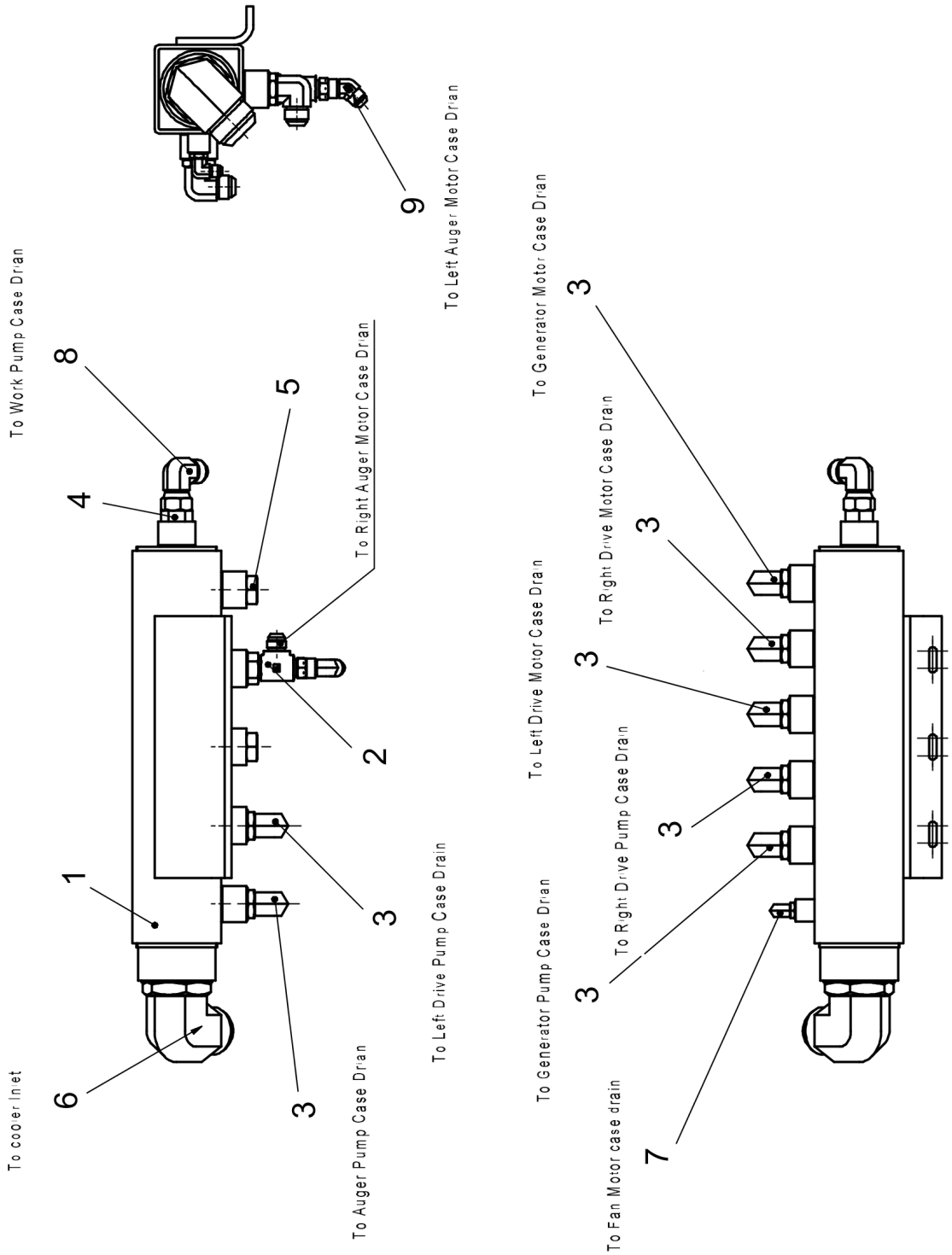

Item	Part No.	Name	Qty	L	SN INFO
1	4812243585	Case drain manifold	1		
2	4812200203	Adapter, 08-12-08	1		
3	D717800085	Elbow, 12-12	7		
4	D717800066	Adapter, 12-12	1		
5	D717802304	Hex plug	2		
6	4812220911	Elbow, 32-24	1		
7	D717800295	6MORB-6MJ90	1		
8	D717801912	Elbow, 12-12	1		
9	4812200113	Elbow, 08-08	1		

Hydraulic system Fuel tank, assembly

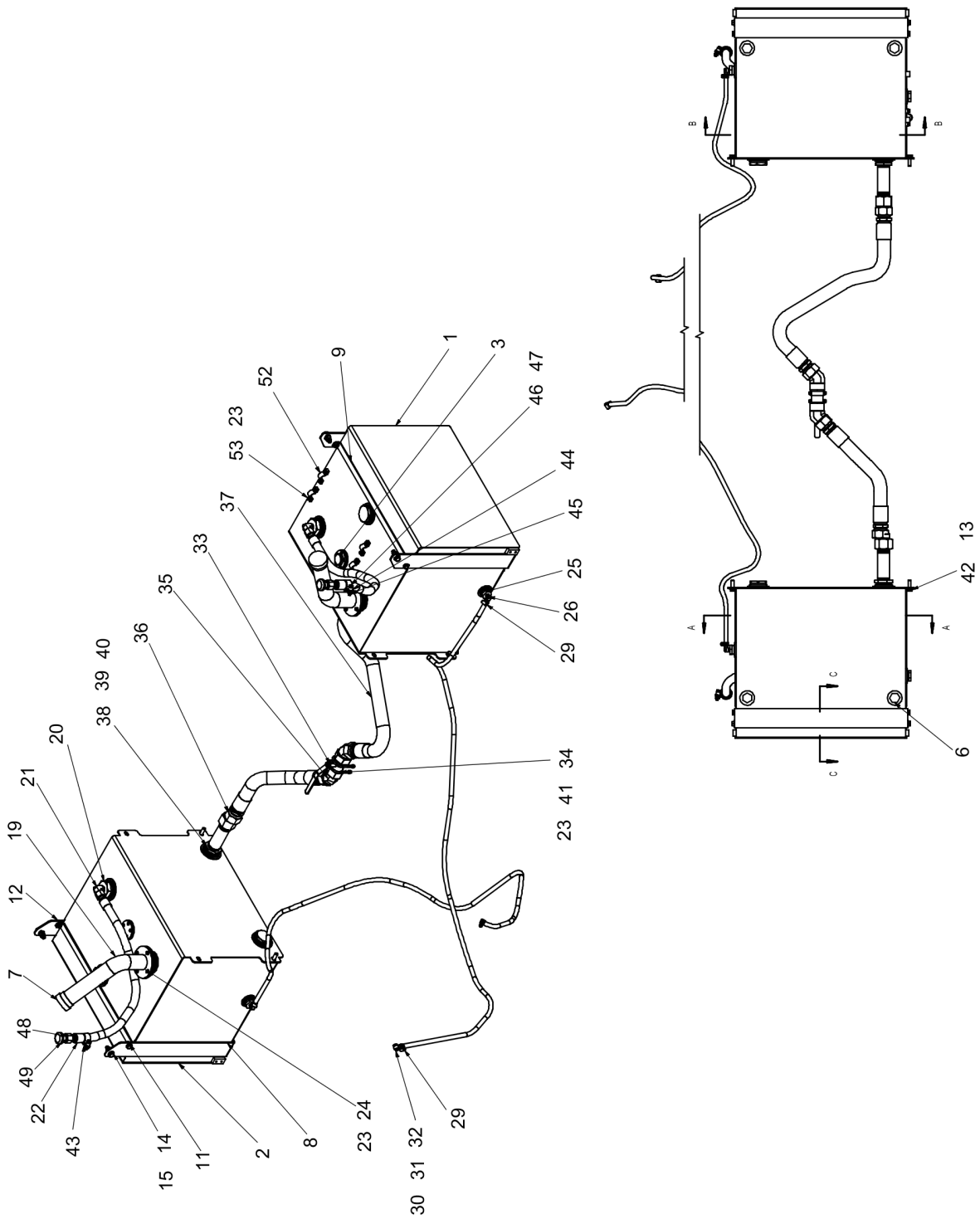

Item	Part No.	Name	Qty	L	SN INFO
1	4812247661	Fuel tank LH	1		
2	4812247662	Fuel tank RH	1		
3	D717083508	Fuel level sending	1		
4	4812247673	Gasket	1		
5	4812247672	Cover	1		
6	D717083514	Plug, 1'	6		
7	D717083521	Fuel cap	2		
8	4812223198	Tank hanging strap	2		
9	4812223199	Tank clamp	2		
10	4812224523	Pad, cork tank strap	6		
11	0301234400	Washer plain	4		
12	0147136003	Hexagon bolt	4		
13	0301235800	Plain washer(A) 13 x 24 x 2.5	12		
14	0147140303	Hexagon bolt	4		
15	0291111200	Lock nut	4		
16	D717083538	Plug, 2'	4		
17	4812223201	Filler neck, bottom	2		
18	4812223208	Gasket, filler neck, fuel	2		
19	4812223204	Filler neck, top	2		
20	4812221548	Adapter, 2'-3/4'	2		
21	D717802024	Elbow, 12-12	2		
22	4812221798	Breather hose assembly, right	2		
23	0301232100	Washer DIN125	22		
24	0147125003	Hexagon bolt	8		
25	D717083530	Plug, 1'	2		
26	D717083531	Elbow	2		
27	4812222345	Hose, fuel return	1		
01	4700904984	Fuel hose	1		
28	4812222346	Hose, fuel supply	1		
01	4700904984	Fuel hose	1		
29	D717909516	Clamp, worm drive	4		
30	4812200447	Fitting, M14X1.5 to 3/8 hose	1		
31	4812200448	Sealing for fitting	2		
32	4812200449	Hollow screw, M14X1.5	1		
33	4812221792	Ball valve	1		
34	4812221794	U-bolt	2		
35	4812221786	Adapter, 1 1/2'-24	2		

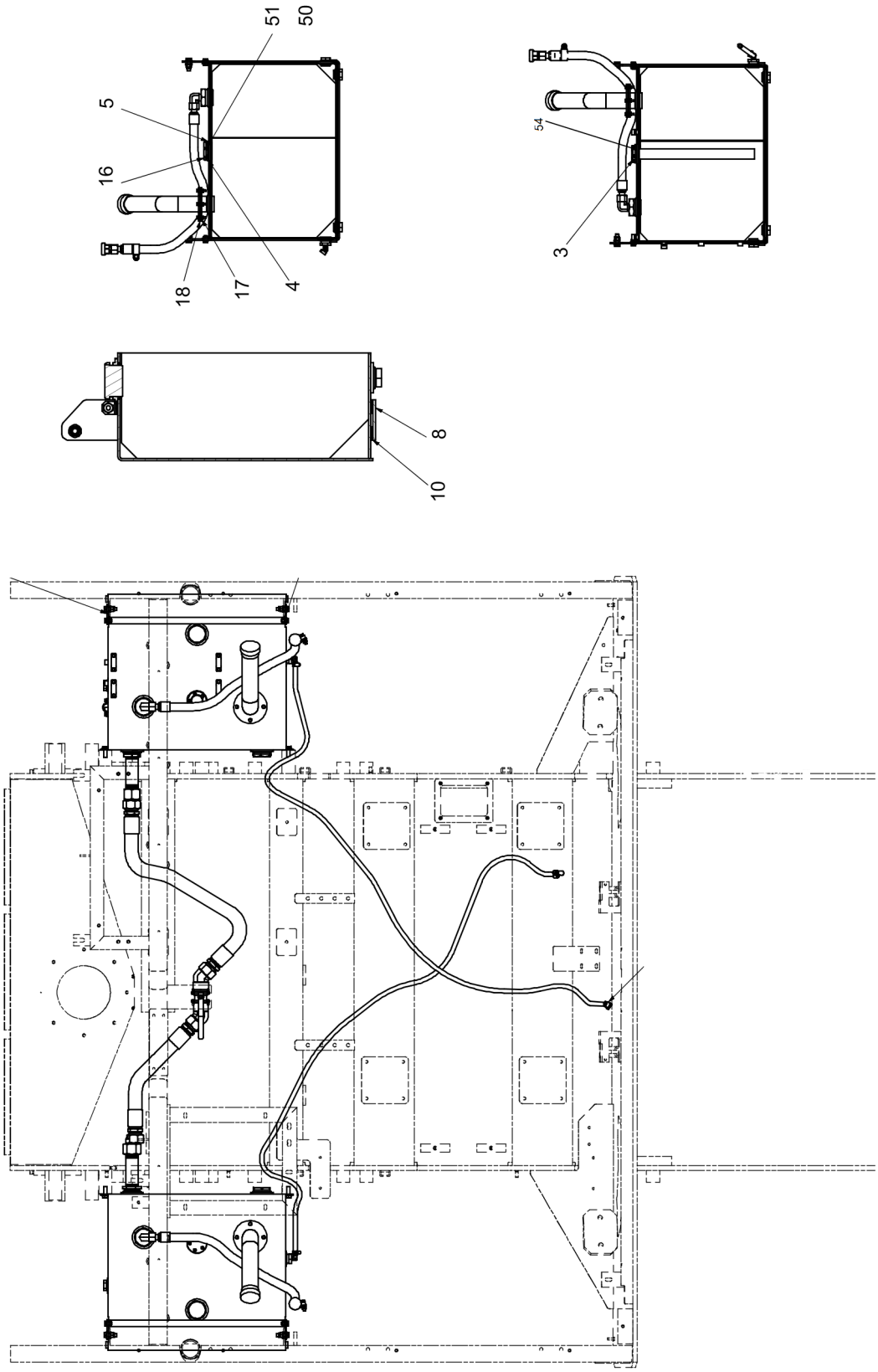
51
50
5
16
18
17
4
54
3
8
10

Item	Part No.	Name	Qty	L	SN INFO
36	4812221796	Fuel tank hose assembly, right	1		
37	4812221795	Fuel tank hose assembly, left	1		
38	4812221781	Adapter, 2'-1 1/2'	2		
39	4812221782	Adapter, 1 1/2'-06	2		
40	4812200401	Adapter, 1 1/2 NPT female	2		
41	0291112854	Hexagon nut	4		
42	0147140203	Hex head screw M12 x 35	4		
43	4812034975	Pipe clamp	2		
44	D717101044	Spacer, fuse holder	2		
45	4812221547	Nut, M8	2		
46	0147132703	Hex head screw M8 x 35	2		
47	0301233500	Plain washer(A) 8.4 x 16 x 1.6	4		
48	4812200074	Adapter, 12-12	2		
49	4812221537	Breather vent	2		
50	0301231800	Plain washer	10		
51	0215001084	Hex. Sock. Screw, M5x10 8.8	10		
52	4812247669	Pipe clamp	5		
53	0147124303	Hex. head screw M6 x 10	10		
54	4812223196	Gasket, sending unit cover	1		

Comments for Page: Fuel tank, assembly

A | This page apply to PN 10002134CEC004555

Hydraulic system 4812247660 Fuel tank, assembly

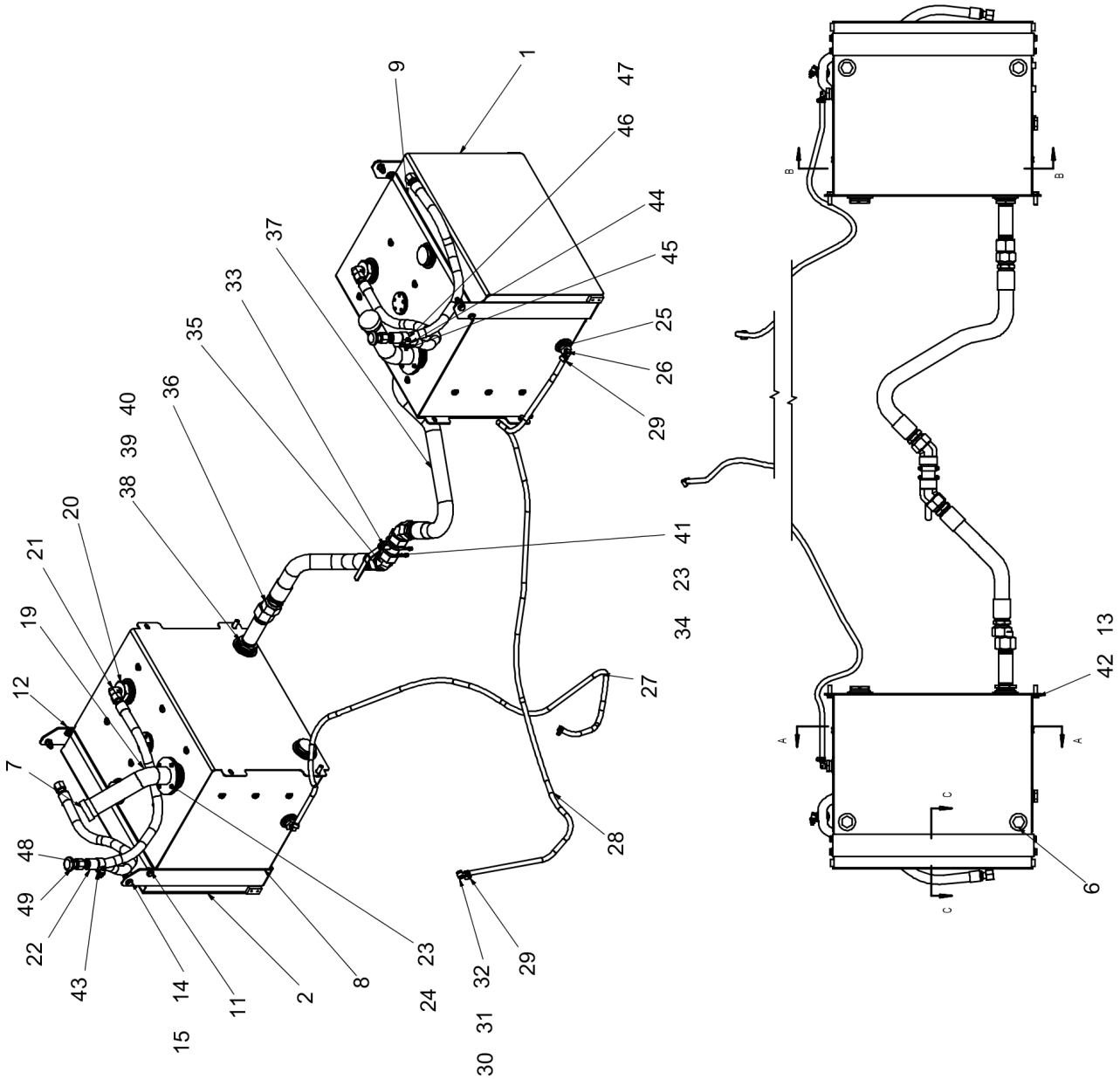

Item	Part No.	Name	Qty	L	SN INFO
1	4812247661	Fuel tank LH	1		
2	4812247662	Fuel tank RH	1		
3	D717083508	Fuel level sending	1		
4	4812247673	Gasket	1		
5	4812247672	Cover	1		
6	D717083514	Plug, 1'	6		
7	D717083521	Fuel cap	2		
8	4812223198	Tank hanging strap	2		
9	4812223199	Tank clamp	2		
10	4812224523	Pad, cork tank strap	6		
11	0301234400	Washer plain	4		
12	0147136003	Hexagon bolt	4		
13	0301235800	Plain washer(A) 13 x 24 x 2.5	12		
14	0147140303	Hexagon bolt	4		
15	0291111200	Lock nut	4		
16	D717083538	Plug, 2'	4		
17	4812223201	Filler neck, bottom	2		
18	4812223208	Gasket, filler neck, fuel	2		
19	4812223204	Filler neck, top	2		
21	D717802024	Elbow, 12-12	2		
22	4812221798	Breather hose assembly, right	2		
23	0301232100	Washer DIN125	12		
24	0147125003	Hexagon bolt	8		
25	D717083530	Plug, 1'	2		
26	D717083531	Elbow	2		
27	4812222345	Hose, fuel return	1		
01	4700904984	Fuel hose	1		
28	4812222346	Hose, fuel supply	1		
01	4700904984	Fuel hose	1		
29	D717909516	Clamp, worm drive	4		
30	4812200447	Fitting, M14X1.5 to 3/8 hose	1		
31	4812200448	Sealing for fitting	2		
32	4812200449	Hollow screw, M14X1.5	1		
33	4812221792	Ball valve	1		
34	4812221794	U-bolt	2		
35	4812221786	Adapter, 1 1/2'-24	2		
36	4812221796	Fuel tank hose assembly, right	1		

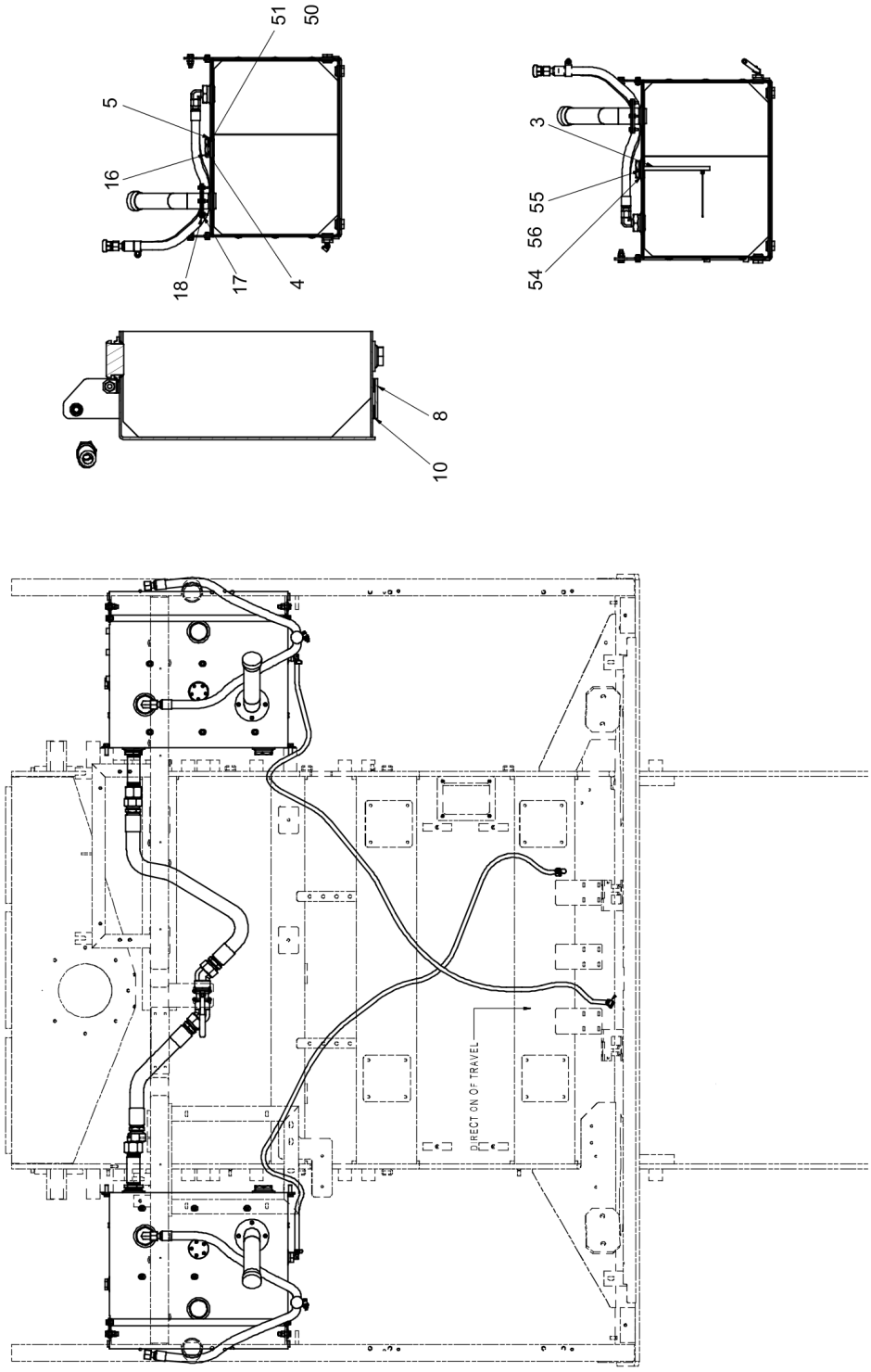
51
50
5
16
18
17
4
3
55
56
54
8
10
DIRECTION OF TRAVEL

Item	Part No.	Name	Qty	L	SN INFO
37	4812221795	Fuel tank hose assembly, left	1		
38	4812221781	Adapter, 2'-1 1/2'	2		
39	4812221782	Adapter, 1 1/2'-06	2		
40	4812200401	Adapter, 1 1/2 NPT female	2		
41	0291112854	Hexagon nut	4		
42	0147140203	Hex head screw M12 x 35	4		
43	4812034975	Pipe clamp	2		
44	D717101044	Spacer, fuse holder	2		
46	0147132703	Hex head screw M8 x 35	2		
47	0301233500	Plain washer(A) 8.4 x 16 x 1.6	4		
48	4812200074	Adapter, 12-12	2		
49	4812221537	Breather vent	2		
50	0301231800	Plain washer	5		
51	0215001084	Hex. Sock. Screw, M5x10 8.8	5		
54	4812223196	Gasket, sending unit cover	1		
55	0301231500	Plain washer 4.3 x 9 x 0.8	5		
56	D717801583	Screw, M6	5		

Pump drive, assembly Pump drive, assembly

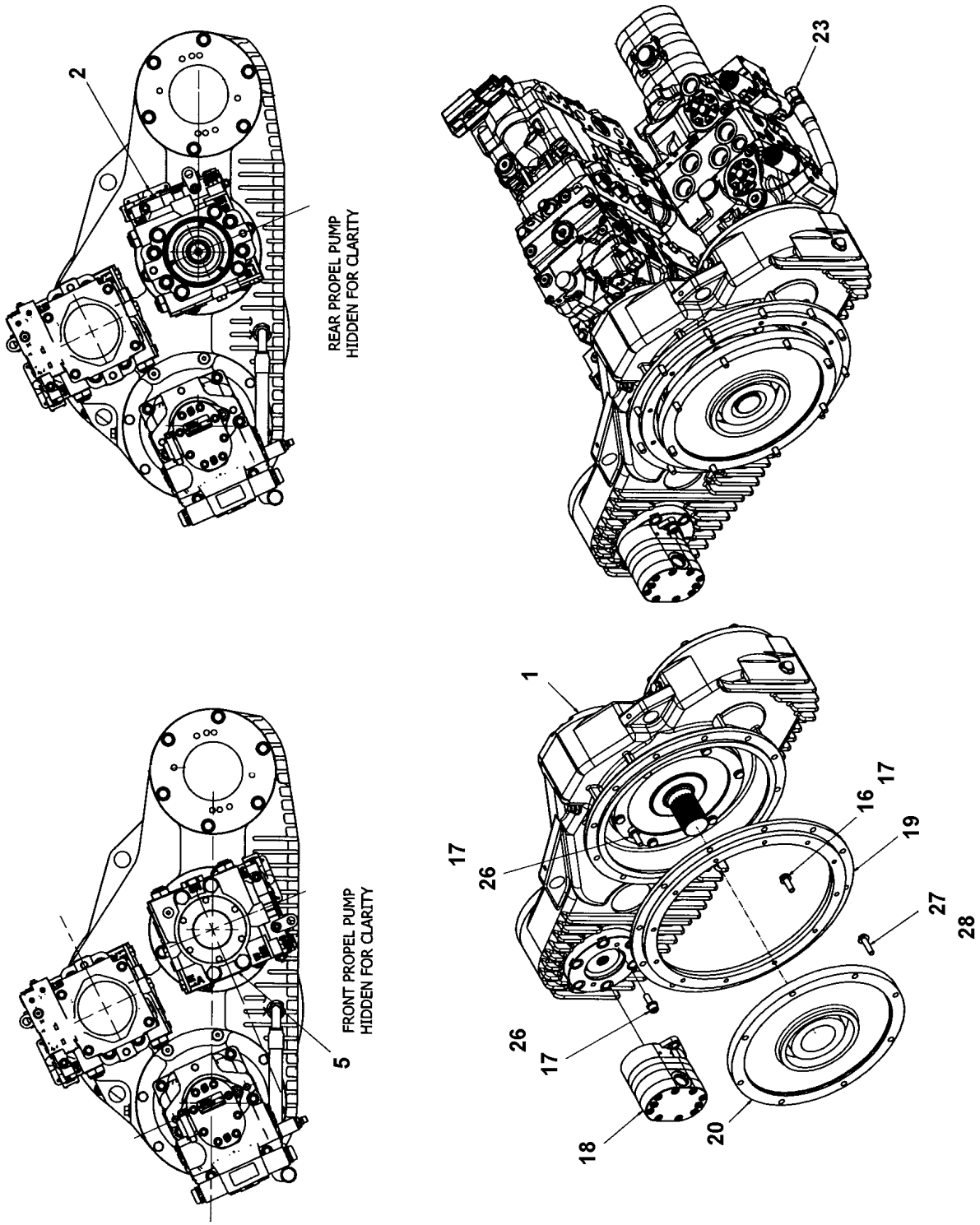

Item	Part No.	Name	Qty	L	SN INFO
1	4812200078	Pump drive gear box	1		
2	D717191000	Pump, propel front	1		
3	D717801688	Screw, M12	4		
4	D717801128	Washer, 12mm	10		
5	D717191500	Pump, propel rear	1		
6	D717190001	O-ring	1		
7	D717800736	Screw, 1/2'	8		
8	D717801086	Flat washer, 0.5'	8		
9	D717801681	Screw, M12	4		
10	D717190002	O-ring, 154	1		
11	4812245439	Pump, conveyor / work	1		
12	D717192500	Pump, auger tandem	1		
13	4812200436	Cap screw, M12	2		
14	D717193001	Pump, vibration	1		
15	D717190003	O-ring, 152	1		
16	D717800484	Screw, M10	12		
17	D717801135	Washer, 10mm	28		
18	4812222519	Gear pump, fan drive	1		
19	D717190004	Adapter, pump drive housing	1		
20	4812247428	Coupling, flywheel flexplate	1		
22	D717190006	Hose assembly	1		
23	D717801877	Plug, 10	1		
26	D717800757	Screw, M10	16		
27	0211220554	Screw	8		
28	0333310024	washer	8		
36	D717193500	Pump, generator	1		
41	4812200087	Hose clamp	1		
45	4812222545	Fittings assembly	1		

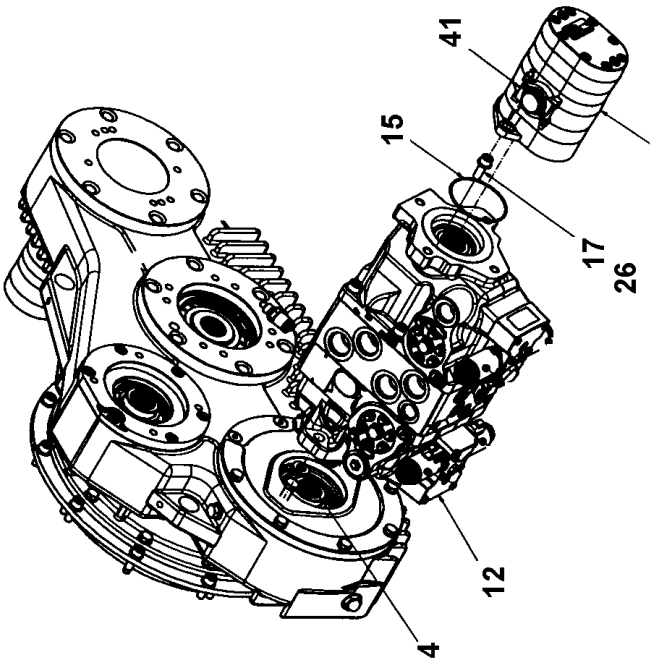

1 AUGER TANDEM & VIBRATION PUMP

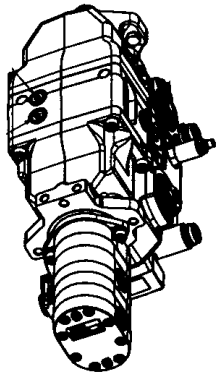

AUGER TANDEM & VIBE PUMP

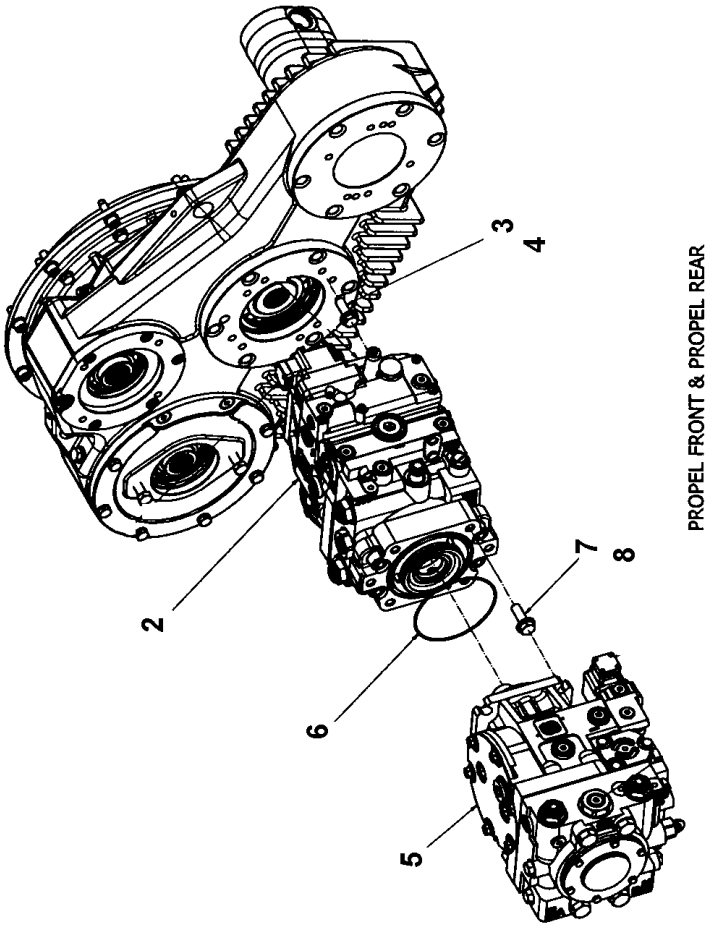

PROPEL FRONT & PROPEL REAR

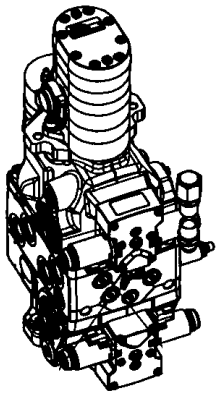

AUGER TANDEM & VIBE PUMP

This page intentionally left blank

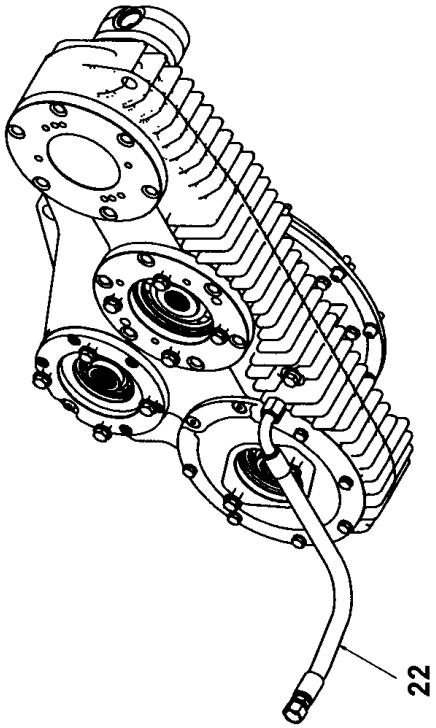

HOSE, OIL DRAIN

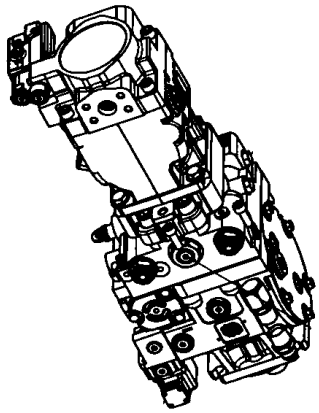

GENERATOR PUMP & CONVEYOR

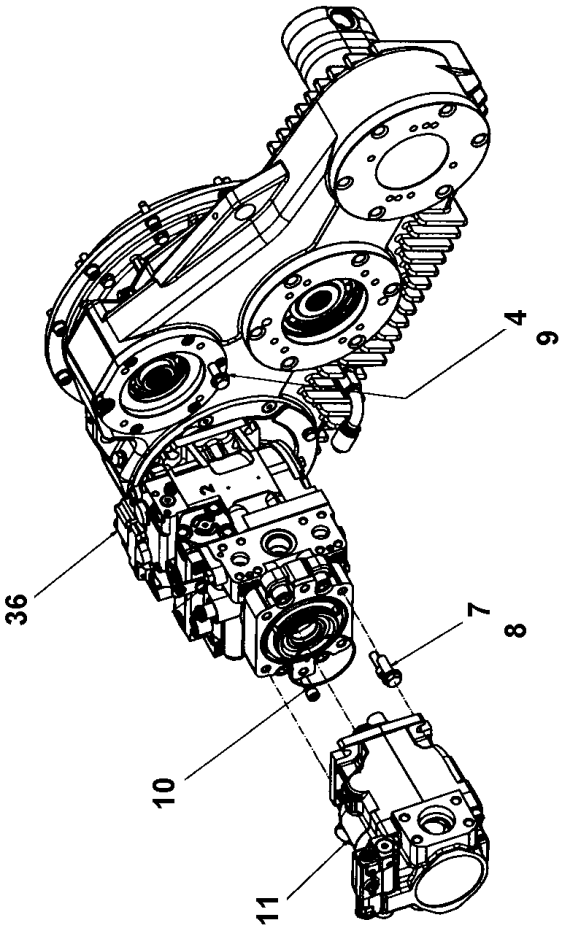

GENERATOR PUMP & CONVEYOR

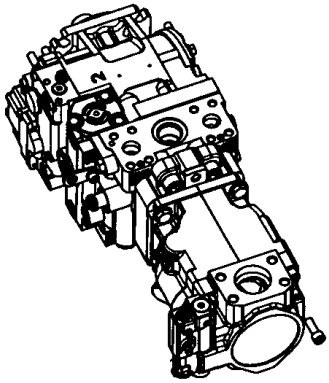

GENERATOR PUMP & CONVEYOR

This page intentionally left blank

Pump drive, assembly 4812200078 Gear box, splitter

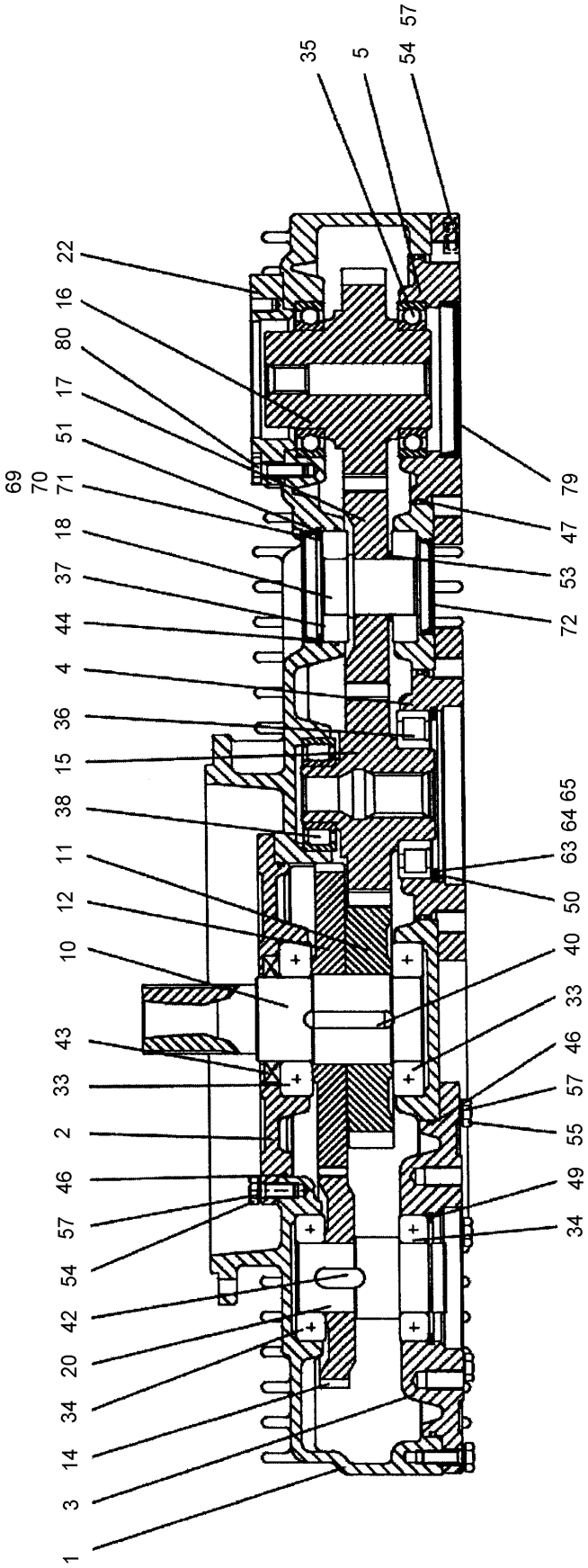

Item	Part No.	Name	Qty	L	SN INFO
1	4812222410	Housing	1		
2	4812222411	Flange	1		
3	4812222412	Flange	1		
4	4812222413	Flange	1		
5	4812222542	Flange	1		
6	4812222414	Flange	1		
10	4812222416	Output shaft	1		
11	4812222417	Spur gear	1		
12	4812222418	Spur gear	1		
14	4812222420	Spur gear	1		
15	4812222464	Spur gear	1		
16	4812222465	Spur gear	1		
17	4812222466	Spur gear	1		
18	4812222467	Shaft	1		
19	4812222422	Spur gear	1		
20	4812222423	Hollow shaft	1		
21	4812222424	Hollow shaft	1		
22	4812222468	Flange	1		
33	4812222426	Ball bearing	2		
34	4812222427	Ball bearing	3		
35	4812222469	Ball bearing	2		
36	4812222428	Bearing	1		
37	4812222470	Bearing	2		
38	4812222429	Bearing	1		
39	4812222430	Bearing	1		
40	4812222431	Key	1		
41	4812222432	Key	1		
42	4812222433	Key	1		
43	4812222434	Radial shaft seal	1		
44	4812222435	Plug	1		
46	4812222436	O-ring	2		
47	4812222437	O-ring	2		
48	4812222438	O-ring	1		
49	4812222439	Retaining ring	2		
50	4812222440	Retaining ring	1		
51	4812222441	Retaining ring	3		
52	4812222442	Supporting plate	1		

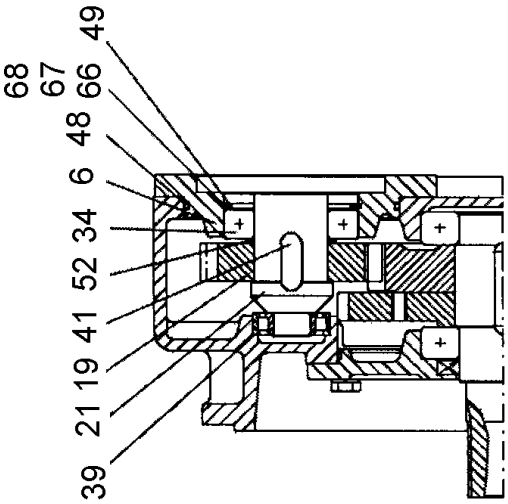
68
67
49
66
48
6
34
52
41
19
21
39

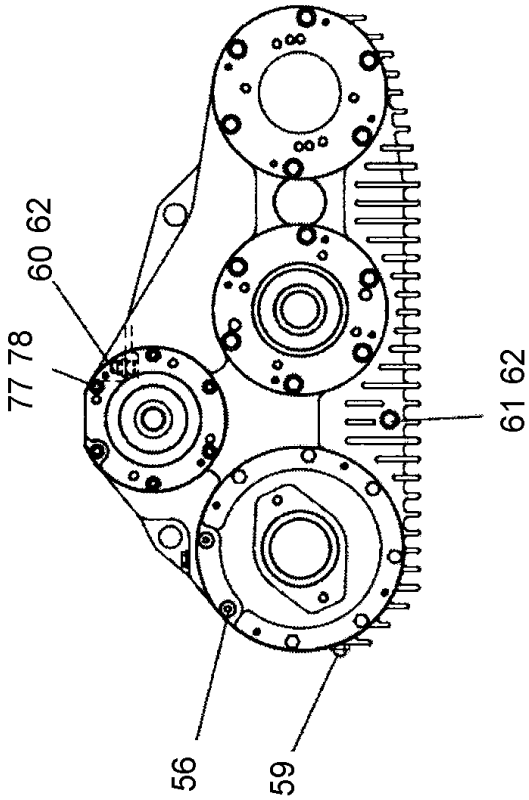
60 62
77 78
61 62
56
59

Item	Part No.	Name	Qty	L	SN INFO
53	4812222471	Supporting plate	1		
54	4812222444	Hexagon bolt	18		
55	4812222445	Hexagon bolt	6		
56	4812222446	Countersunk screw	2		
57	4812222447	Spring ring	24		
59	D717954663	Sight glass	1		
60	4812222448	Breather	1		
61	4812222449	Screw plug	2		
62	4812222450	Seal	3		
63	4812222451	Shim	1		
64	4812222452	Shim	1		
65	4812222453	Shim	2		
66	4812222454	Shim	2		
67	4812222455	Shim	2		
68	4812222456	Shim	4		
69	4812222472	Shim	1		
70	4812222473	Shim	1		
71	4812222474	Shim	2		
72	4812222457	Plug	1		
73		Name plate	1		
74		Name plate	1		
75	4812222459	Taper plug	3		
76	4812222487	Taper plug	1		
77	4812222460	Screw plug	6		
78	4812222461	Spring ring	6		
79	4812222475	Plug	1		
80	4812222476	Hexagon bolt	6		

Pump drive, assembly D717191000 Pump, propel front, assembly

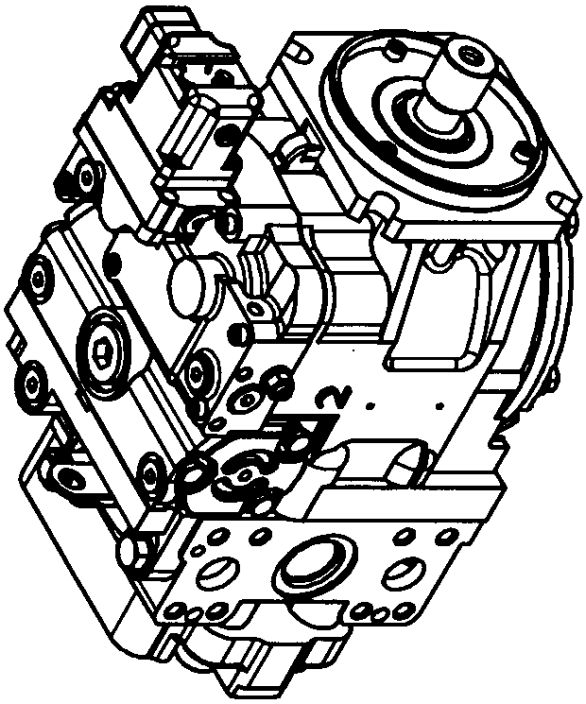

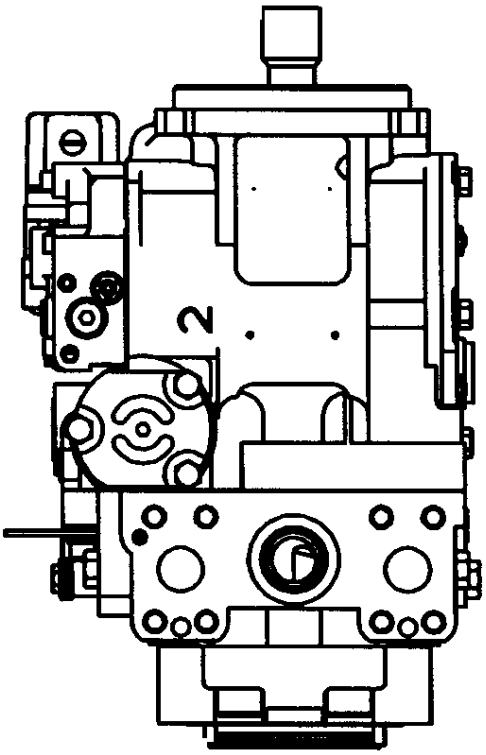

Item	Part No.	Name	Qty	L	SN INFO
1	D717950113	Ring, piston	2		
2	D717950120	Plate, valve	1		
3	D717950127	Shaft seal assembly	1		
4	D717950253	Bearing, roller	1		
5	D717950288	Charge pump set	1		
6	D717950295	Gasket	2		
7	D717950302	EDC kit	1		
8	D717950309	Multifunction valve kit	2		
9	D717950316	Cylinder block kit	1		
10	D717950323	Bushing	1		
11	D717950330	Journal bearing	1		
12	D717950337	Charge pump cover	1		
13	D717950351	Gasket	2		
14	D717950365	C pad seal	2		
15	D717950372	Charge pump shaft	1		
16	D717950379	Screen, control filter	3		
17	D717950547	Charge relief valve kit	1		
18	D717950554	Key	1		
19	D717950568	O-ring	4		
20	D717950575	O-ring	4		
21	D717950582	O-ring	4		
22	D717950589	O-ring	4		
23	D717950596	O-ring	2		
25	D717950603	O-ring	2		
26	D717950610	O-ring	4		
27	D717950624	Pin	1		
28	D717950645	Retaining ring	1		
29	D717950701	PCP	1		
30	D717950561	O-ring	4		
31	D717951065	O-ring	10		
32	D717951072	O-ring	2		
33	D717951079	O-ring	2		
34	D717951086	Pin	2		
35	D717951093	Plug	2		
36	D717952892	Spring	2		
37	D717952976	Side cover insert	1		
38	D717952983	Retaining plate	1		

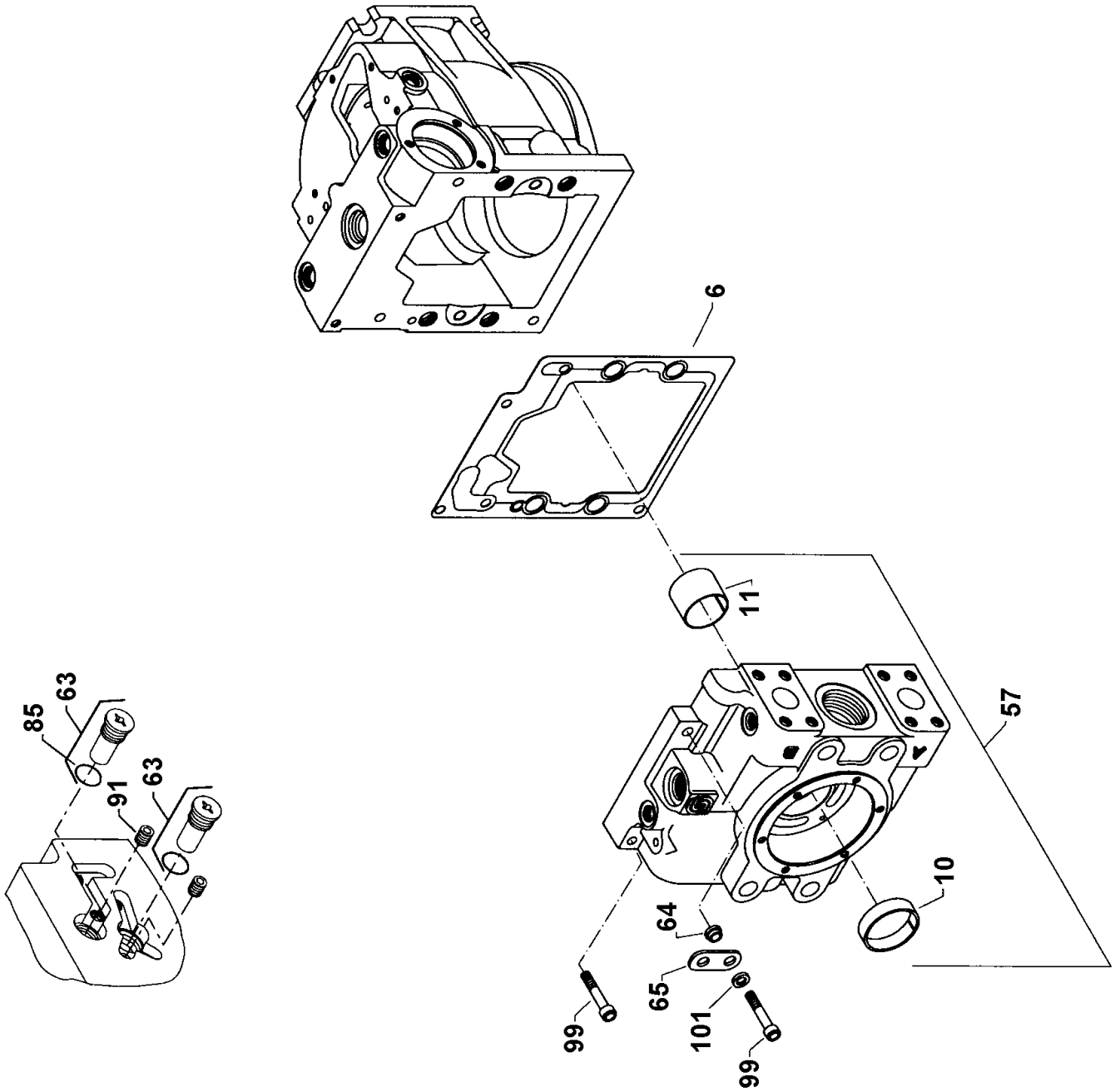
85
63
91
63
99
65
64
101
99
11
6
10
57

Item	Part No.	Name	Qty	L	SN INFO
39	D717952990	Retaining plate	1		
40	D717952997	Spring seat	2		
41	D717953004	Bearing	1		
42	D717953011	Socket screw	4		
43	D717953018	Servo arm	1		
44	D717953025	Screw	1		
45	D717953032	Lip seal	2		
46	D717953067	Piston	9		
47	D717953102	Screw	12		
48	D717953109	Plug	1		
49	D717953284	Guide post	2		
50	D717953291	Feedback link	1		
51	D717953305	Slipper guide	1		
52	D717953319	Spring seat	1		
53	D717953326	Spring retainer	1		
54	D717953333	Spline shaft	1		
55	D717953347	Slipper guide bearing	2		
56	D717953354	Cage locator link	1		
57	D717953361	End cap	1		
58	D717953368	Spacer	4		
59	D717953382	Flange adapter	1		
60	D717953389	Swash plate	1		
61	D717953410	Spring	1		
62	D717953431	Piston ring	2		
63	D717953438	Check valve	2		
64	D717953452	Lifting bracket spacers	1		
65	D717953459	Lifting bracket	1		
66	D717953480	Flange cover	1		
67	D717953494	Coupling	1		
68	D717953501	Shim	2		
69	D717953508	Pin	1		
70	D717953515	Spring retainer	1		
71	D717953522	Variable swash plate	1		
72	D717953529	Side cover	1		
73	D717953536	Variable housing	1		
74	D717953585	Spring	1		
75	D717953613	Cylinder block	1		

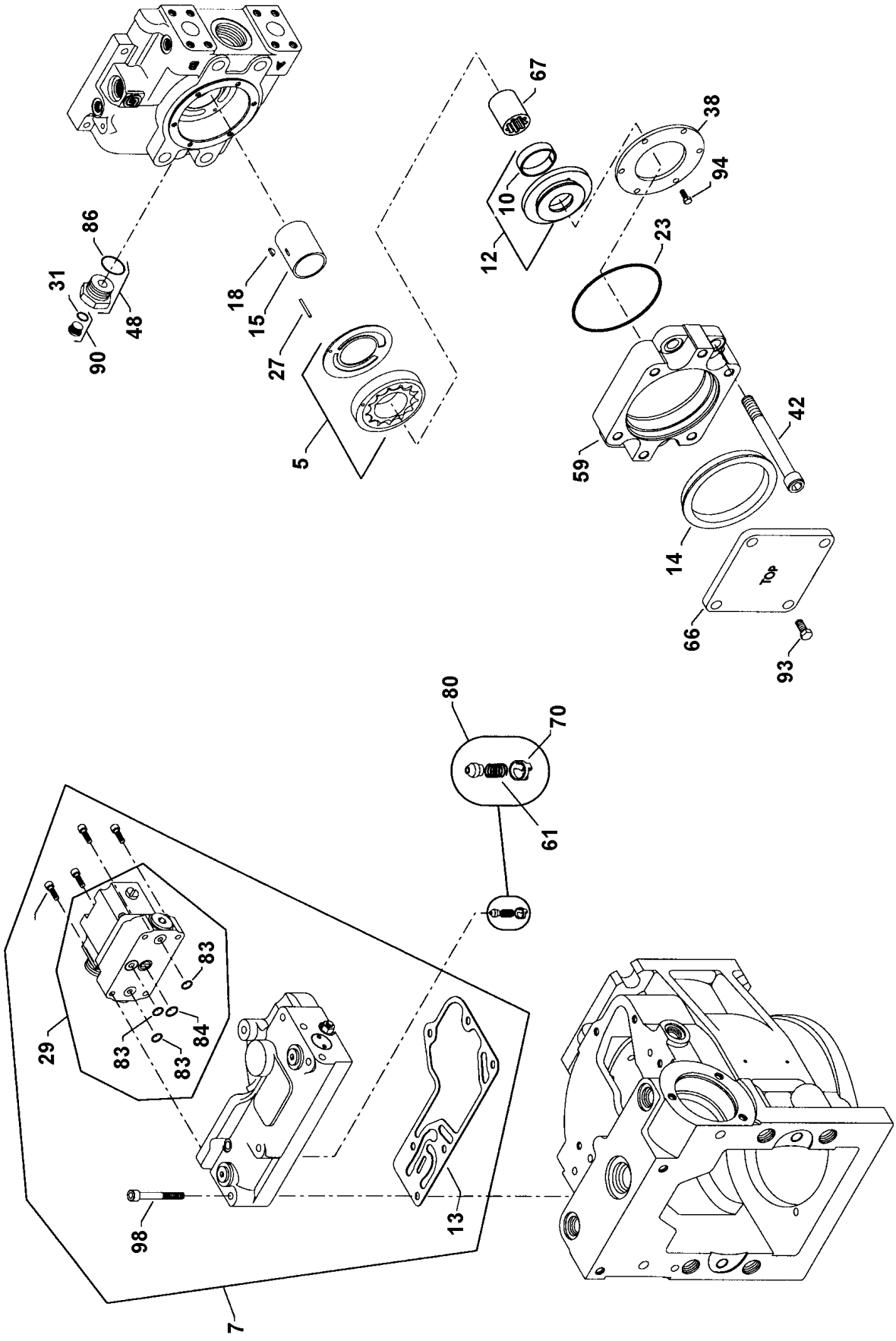
86
31
48
90
18
15
27
5
67
10
12
38
94
23
59
42
14
66
93
80
70
61
29
83
84
83
83
98
13
7

Item	Part No.	Name	Qty	L	SN INFO
76	D717953641	Servo piston	1		
77	D717953648	Leveler	1		
78	D717953669	Servo cylinder	2		
79	D717953697	Slider block	1		
80	D717953858	Control orifice kit	1		
81	D717953886	Nut	4		
82	D717953928	O-ring	2		
83	D717953949	O-ring	6		
84	D717953956	O-ring	2		
85	D717953970	O-ring	2		
86	D717953977	O-ring	2		
88	D717953998	Spiral pin	1		
89	D717954005	Plug	3		
90	D717954019	Plug	7		
91	D717954026	Plug	2		
92	D717954047	Retaining ring	1		
93	D717954061	Screw	2		
94	D717954068	Screw	6		
95	D717954075	Screw	6		
96	D717954103	Screw	8		
97	D717954110	Screw, metric	3		
98	D717954117	Screw	6		
99	D717954124	Screw	2		
100	D717954152	Screw	1		
101	D717954159	Washer	1		
102	D717954166	Washer	1		
103	D717953865	Seal overhaul kit	1		

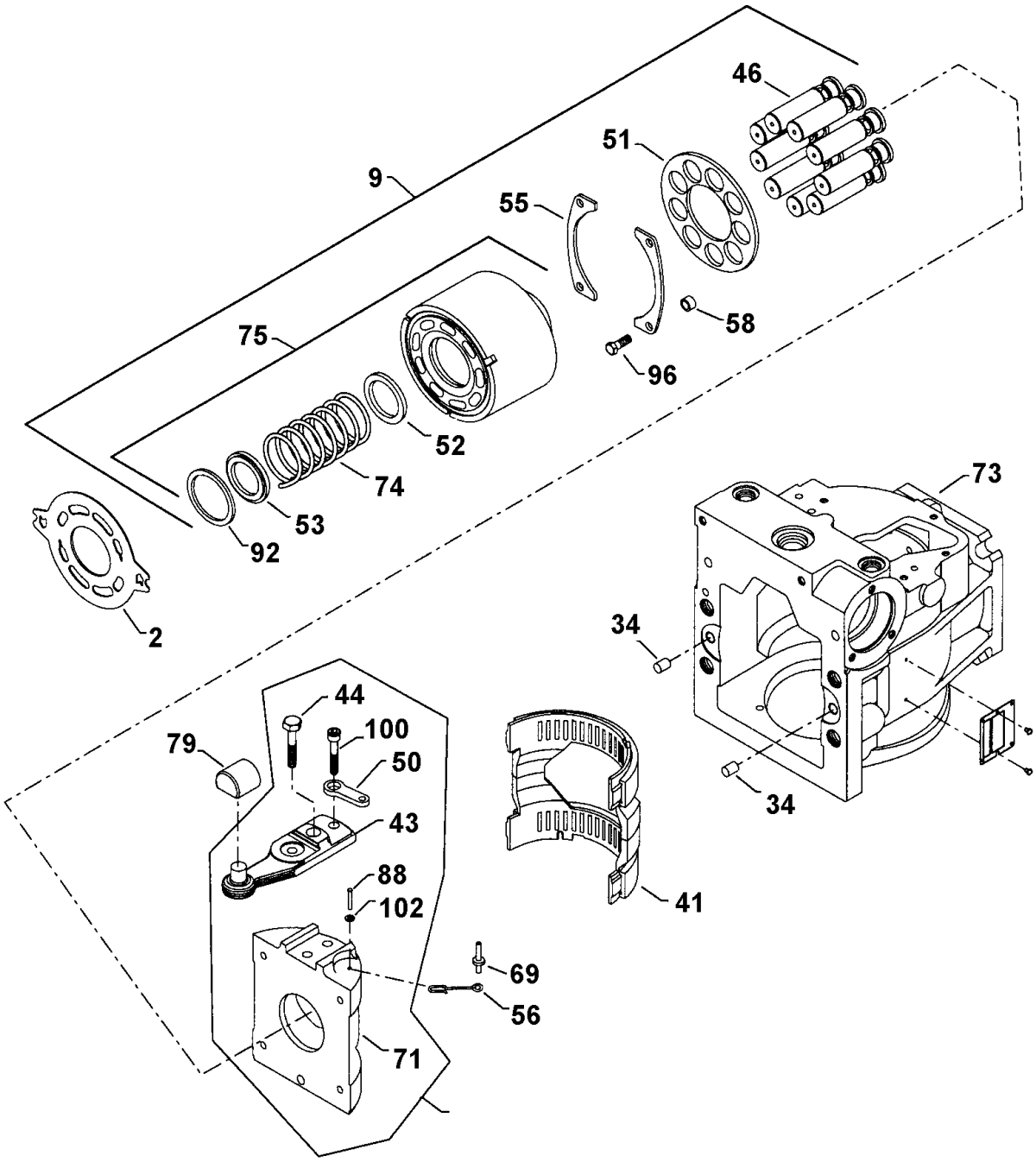
46
51
9
55
58
75
96
52
74
53
92
2
73
34
44
100
79
50
43
34
88
102
41
69
56
71

This page intentionally left blank

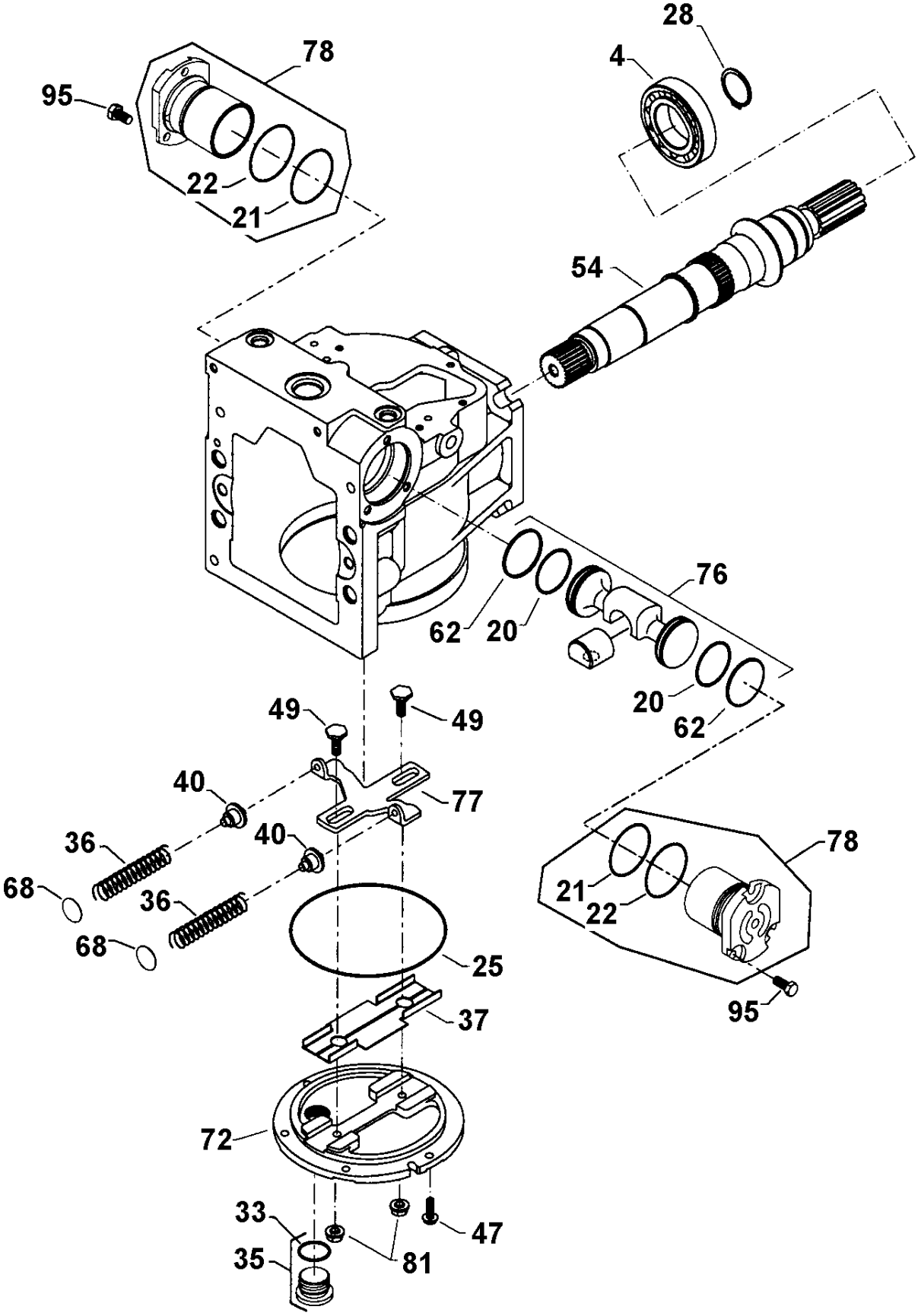
28
4
78
95
22
21
54
76
62
20
20
62
49
49
40
77
36
40
78
68
21
22
36
68
25
95
37
72
33
47
35
81

This page intentionally left blank

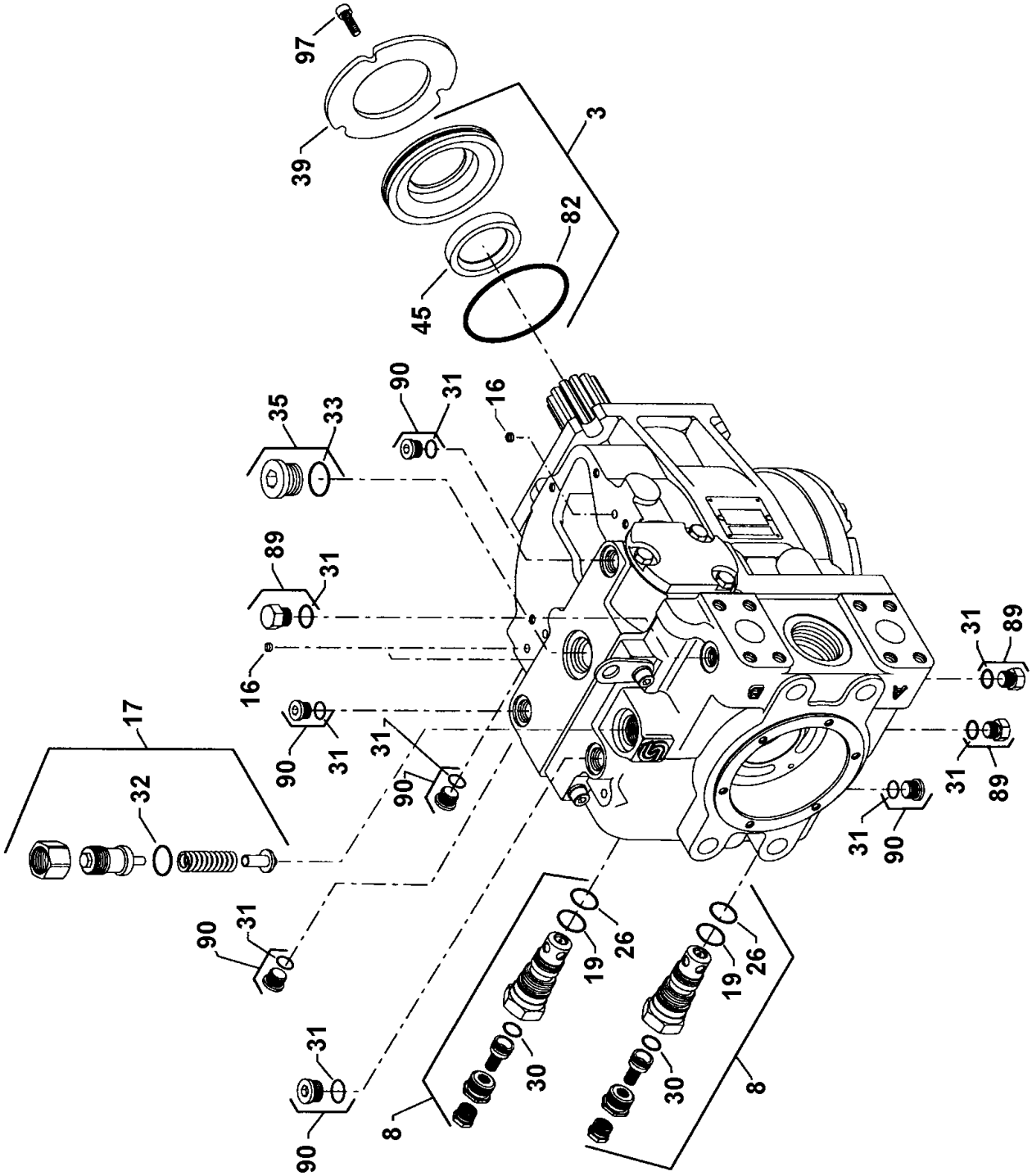
97
39
3
82
45
90
31
16
35
33
89
31
16
17
32
90
31
31
90
90
31
31
89
31
89
31
90
26
19
30
8
26
19
30
8
31
90

This page intentionally left blank

Pump drive, assembly D717191500 Pump, propel rear, assembly

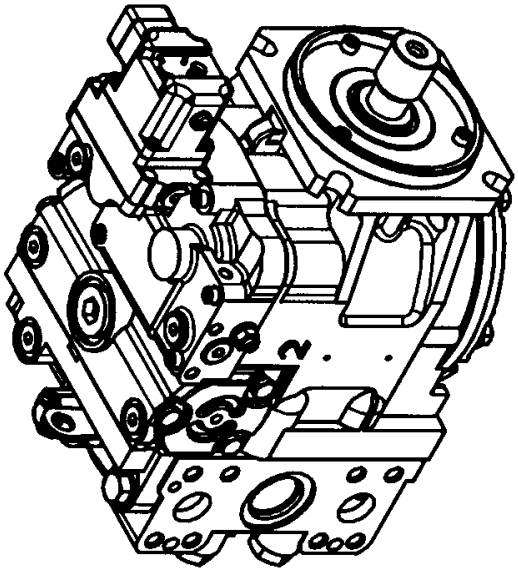

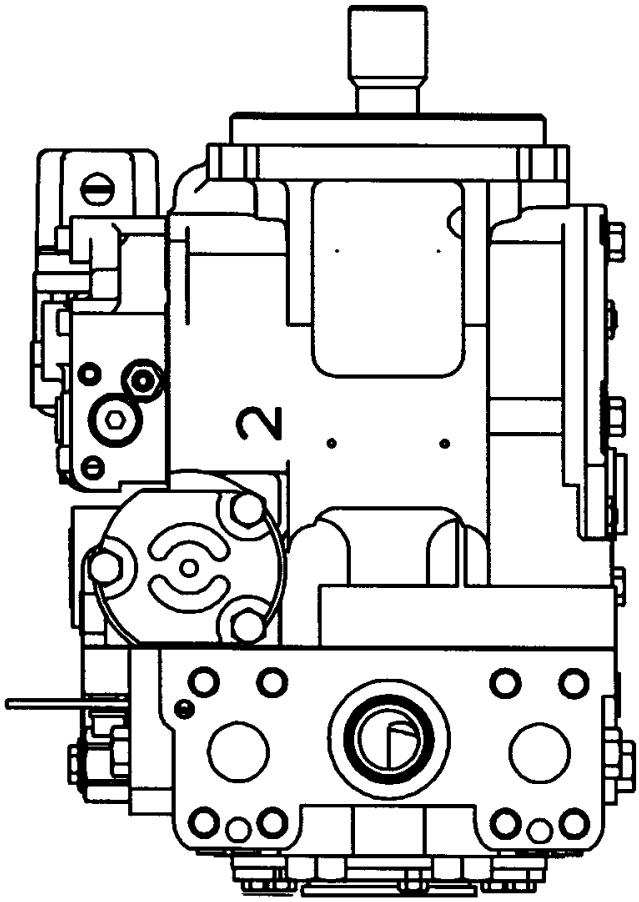

Item	Part No.	Name	Qty	L	SN INFO
1	D717950113	Ring, piston	2		
2	D717950120	Plate, valve	1		
3	D717950127	Shaft seal assembly	1		
4	D717950253	Bearing, roller	1		
5	D717950288	Charge pump set	1		
6	D717950295	Gasket	2		
7	D717950302	EDC kit	1		
8	D717950309	Multifunction valve kit	2		
9	D717950316	Cylinder block kit	1		
10	D717950323	Bushing	2		
11	D717950330	Journal bearing	1		
12	D717950344	Charge pump cover	1		
13	D717950351	Gasket	2		
14	D717950372	Charge pump shaft	1		
15	D717950379	Screen, control filter	3		
16	D717950547	Charge relief valve kit	1		
17	D717950554	Key	1		
18	D717950561	O-ring	4		
19	D717950568	O-ring	4		
20	D717950575	O-ring	4		
21	D717950582	O-ring	4		
22	D717950589	O-ring	4		
23	D717950603	O-ring	2		
24	D717950610	O-ring	4		
25	D717950624	Pin	1		
26	D717950645	Retaining ring	1		
27	D717950701	PCP	1		
28	D717951065	O-ring	10		
29	D717951072	O-ring	2		
30	D717951079	O-ring	2		
31	D717951086	Pin	2		
32	D717951093	Plug	2		
33	D717952892	Spring	2		
34	D717952976	Side cover insert	1		
35	D717952983	Retaining plate	1		
36	D717952990	Retaining plate	1		
37	D717952997	Spring seat	2		

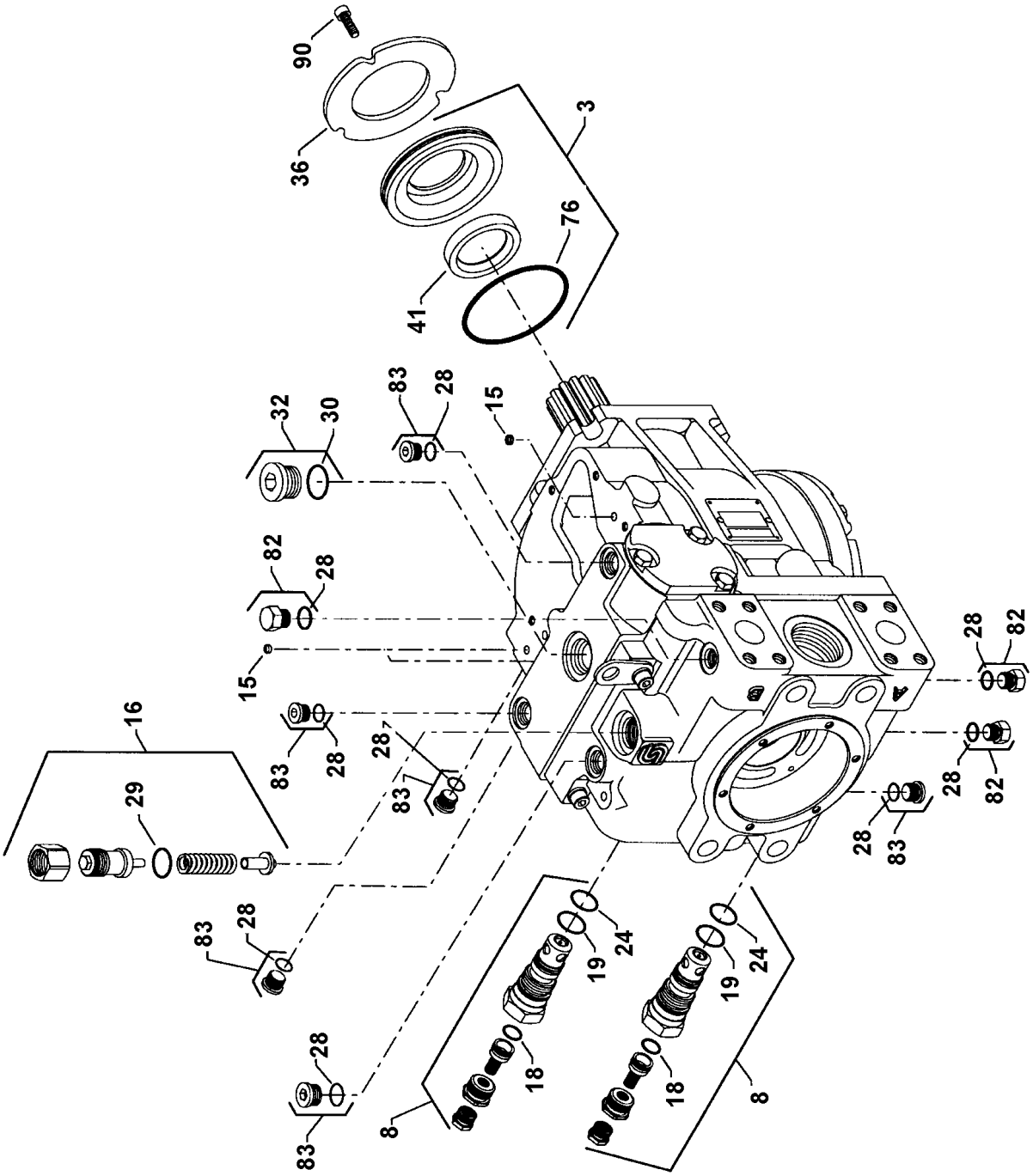
90
36
3
41
76
32
30
83
28
15
82
28
15
16
29
83
28
28
83
83
28
28
83
28
82
28
82
28
83
19
24
19
24
18
18
8
8

Item	Part No.	Name	Qty	L	SN INFO
38	D717953004	Bearing	1		
39	D717953018	Servo arm	1		
40	D717953025	Screw	1		
41	D717953032	Lip seal	2		
42	D717953067	Piston	9		
43	D717953102	Screw	12		
44	D717953109	Plug	1		
45	D717953284	Guide post	2		
46	D717953291	Feedback link	1		
47	D717953305	Slipper guide	1		
48	D717953319	Spring seat	1		
49	D717953326	Spring retainer	1		
50	D717953333	Spline shaft	1		
51	D717953347	Slipper guide bearing	2		
52	D717953354	Cage locator link	1		
53	D717953361	End cap	1		
54	D717953368	Spacer	4		
55	D717953389	Swash plate	1		
56	D717953410	Spring	1		
57	D717953431	Piston ring	2		
58	D717953438	Check valve	2		
59	D717953452	Lifting bracket spacers	1		
60	D717953459	Lifting bracket	1		
61	D717953501	Shim	2		
62	D717953508	Pin	1		
63	D717953515	Spring retainer	1		
64	D717953522	Variable swash plate	1		
65	D717953529	Side cover	1		
66	D717953536	Variable housing	1		
67	D717953585	Spring	1		
68	D717953613	Cylinder block	1		
69	D717953641	Servo piston	1		
70	D717953648	Leveler	1		
71	D717953669	Servo cylinder	2		
72	D717953697	Slider block	1		
73	D717953858	Control orifice kit	1		
74	D717953886	Nut	4		

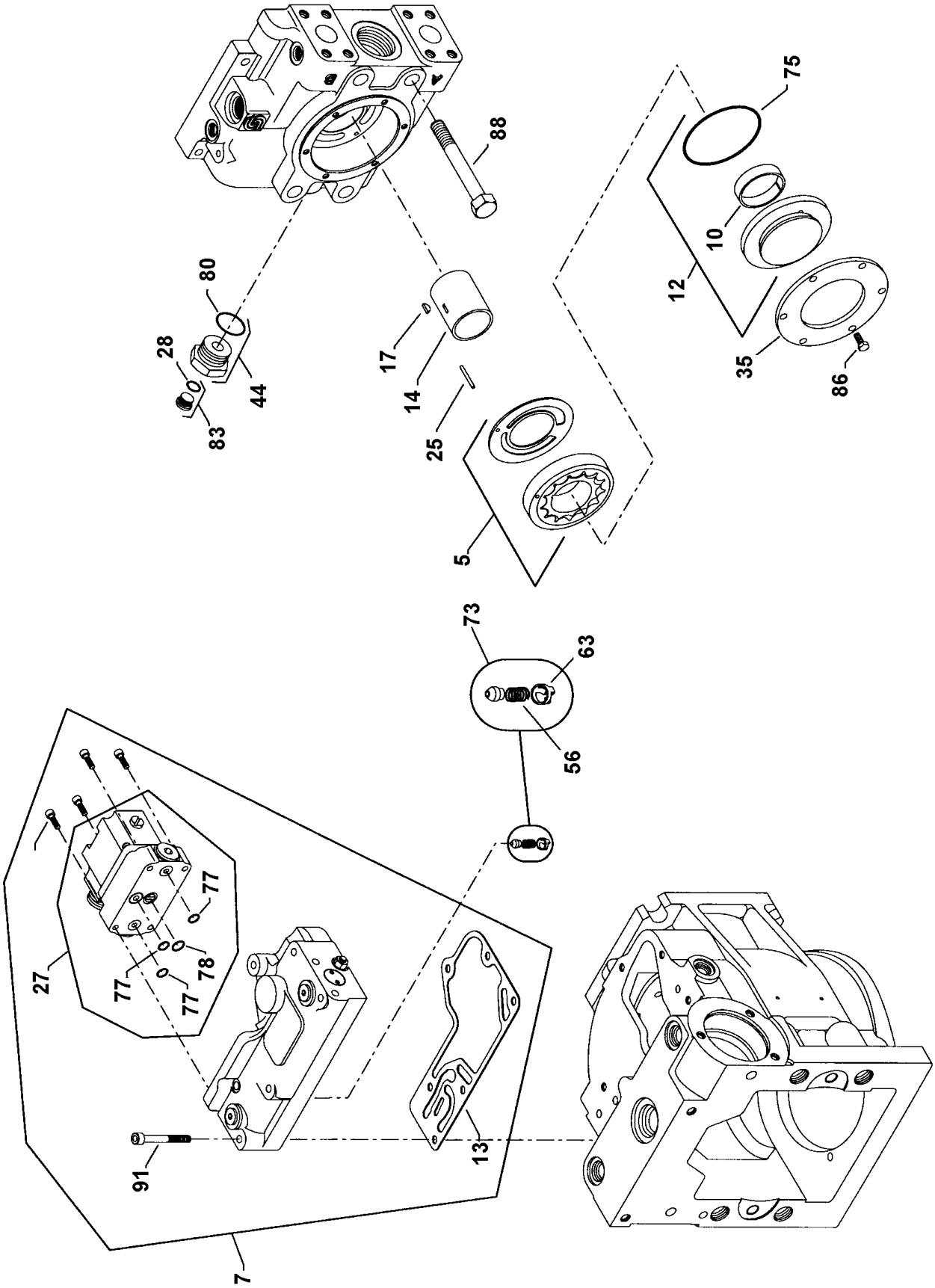
88
80
28
44
83
17
14
25
5
75
10
12
35
86
73
63
56
27
77
78
77
77
91
13
7

Item	Part No.	Name	Qty	L	SN INFO
75	D717953907	O-ring	2		
76	D717953928	O-ring	2		
77	D717953949	O-ring	6		
78	D717953956	O-ring	2		
79	D717953970	O-ring	2		
80	D717953977	O-ring	2		
81	D717953998	Spiral pin	1		
82	D717954005	Plug	3		
83	D717954019	Plug	7		
84	D717954026	Plug	2		
85	D717954047	Retaining ring	1		
86	D717954068	Screw	6		
87	D717954075	Screw	6		
88	D717954089	Screw	4		
89	D717954103	Screw	8		
90	D717954110	Screw, metric	3		
91	D717954117	Screw	6		
92	D717954124	Screw	2		
93	D717954152	Screw	1		
94	D717954159	Washer	1		
95	D717954166	Washer	1		
96	D717953865	Seal overhaul kit	1		

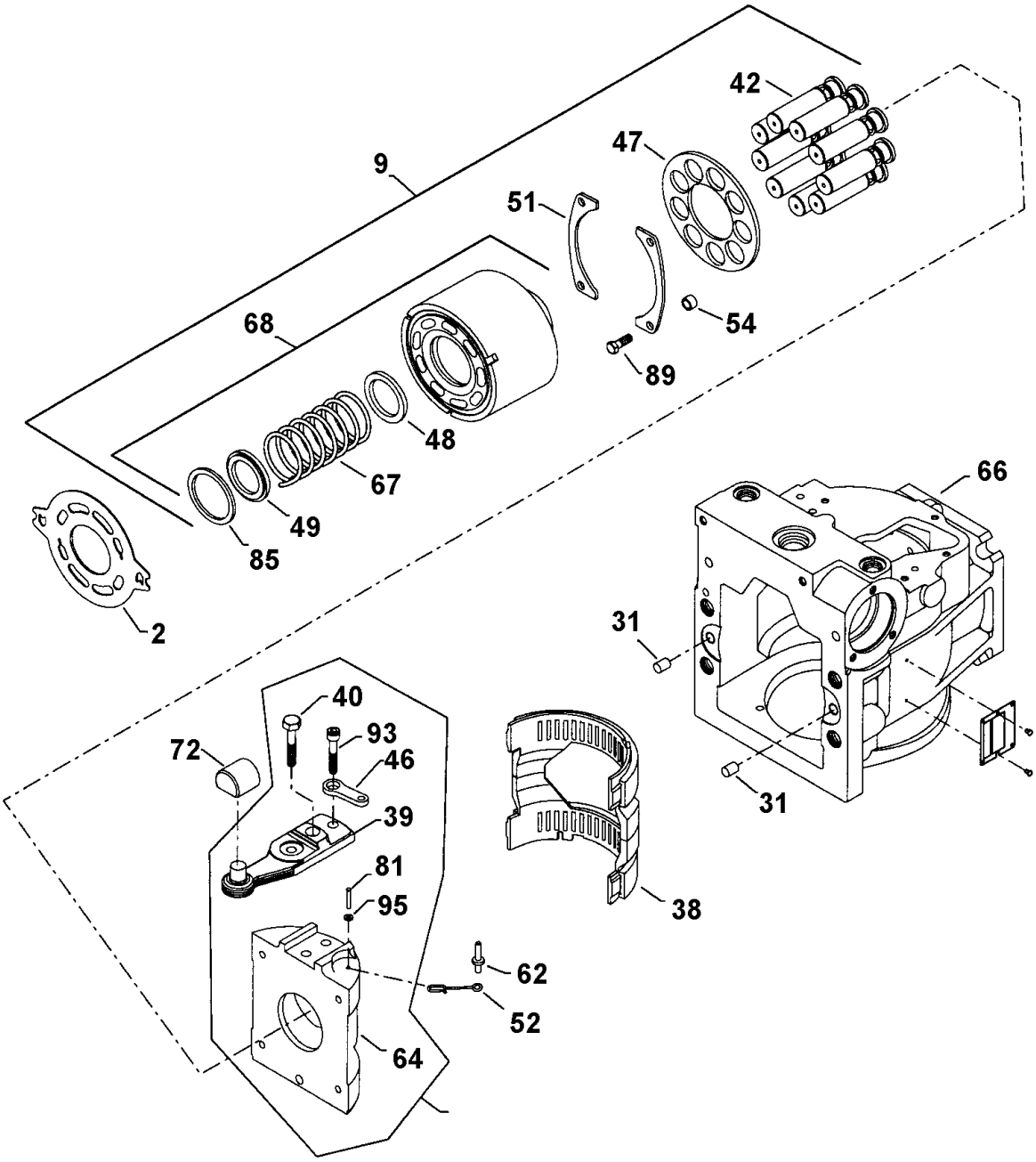
42
47
9
51
54
68
89
48
67
49
85
66
2
31
40
93
72
46
39
31
81
95
38
62
52
64

This page intentionally left blank

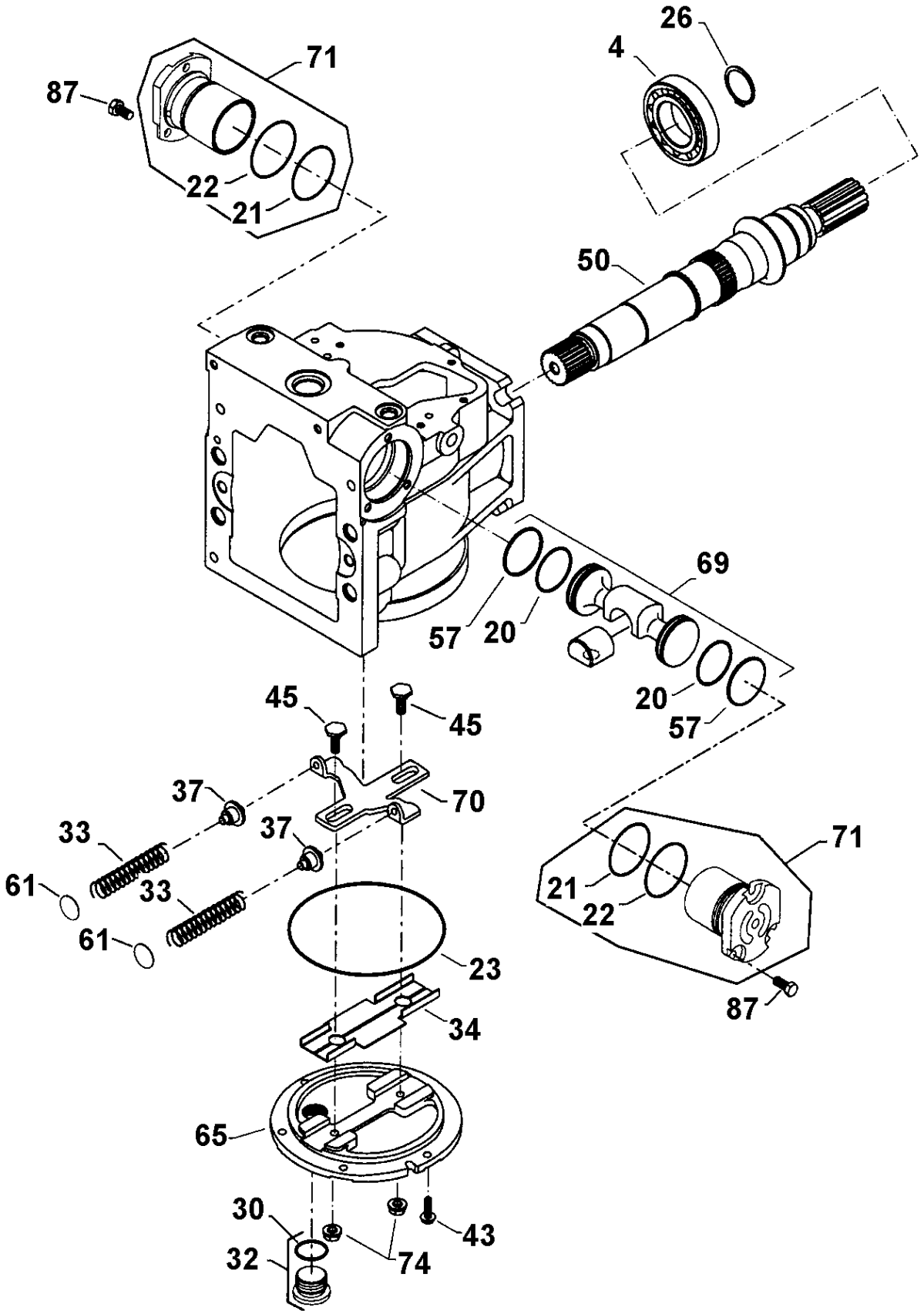
26
4
71
87
22
21
50
69
57
20
20
57
45
45
37
70
33
37
71
61
33
21
22
61
23
87
34
65
30
43
32
74

This page intentionally left blank

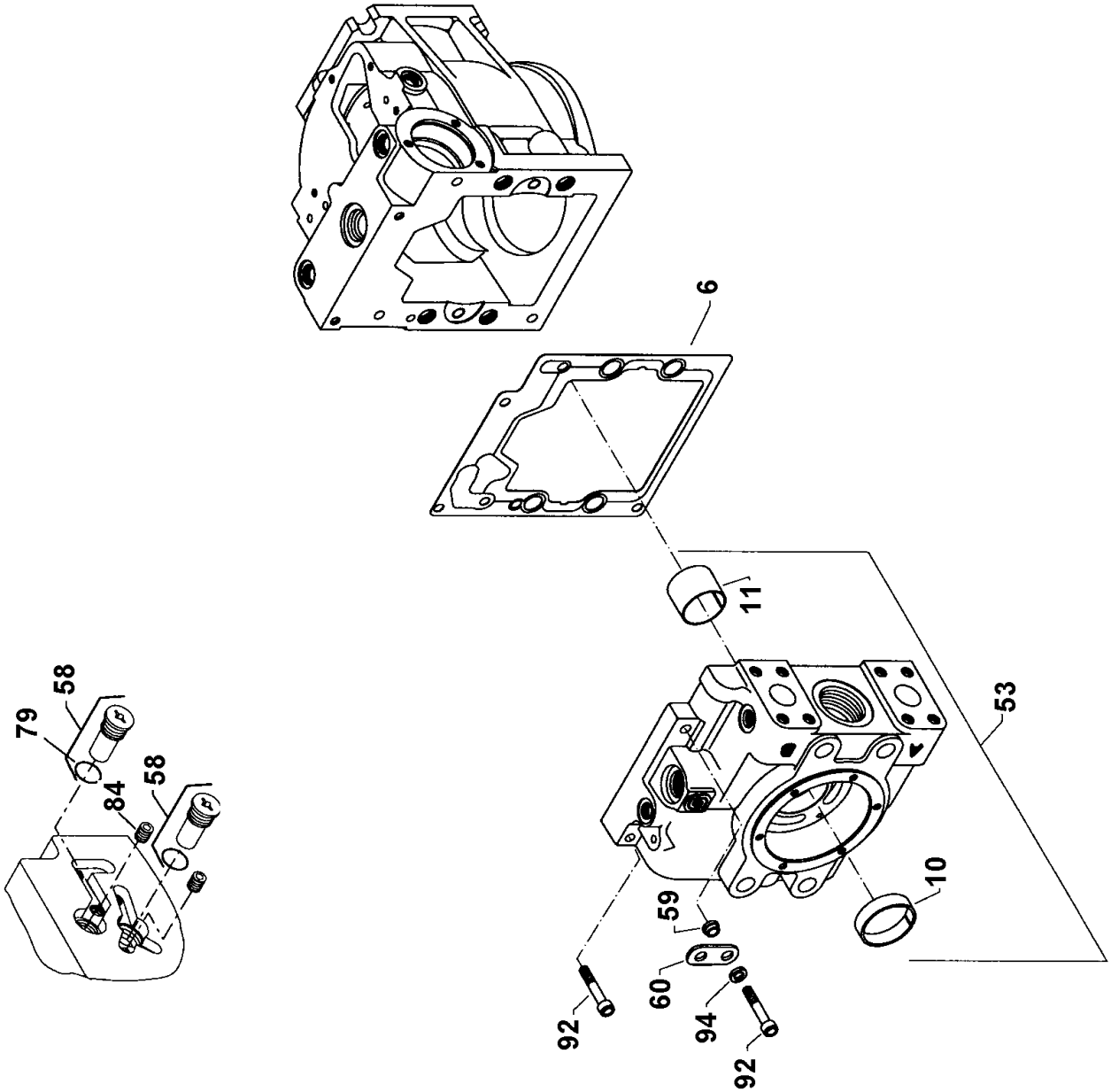
6
11
53
10
59
60
94
92
92
79
58
84
58

This page intentionally left blank

Pump drive, assembly D717192500 Pump, auger tandem, assembly

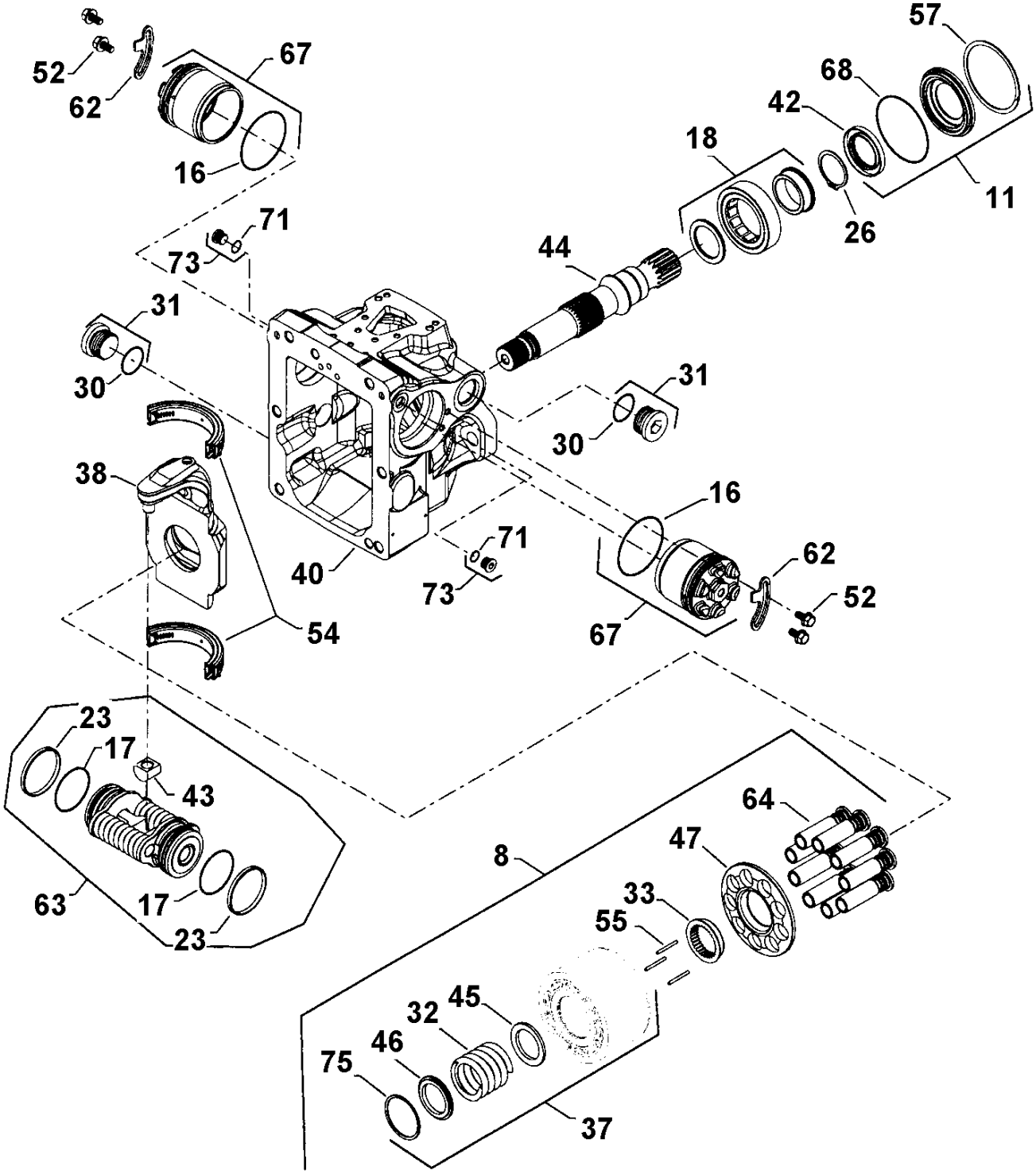

Item	Part No.	Name	Qty	L	SN INFO
1	D717950001	Charge relief valve kit	2		
2	D717950057	Solenoid valve kit	4		
3	D717950064	Orifice	4		
4	D717950071	Gasket	4		
5	D717950078	Shaft	1		
6	D717950085	Gasket	6		
8	D717950092	Cylinder block kit	2		
9	D717950099	Bearing	2		
10	D717950106	Coupling	1		
11	D717950218	Shaft seal	1		
12	D717950225	Charge relief valve kit	1		
13	D717950232	A pad seal	1		
14	D717950239	SCR plug	3		
15	D717950246	Spring	4		
16	D717950267	O-ring	8		
17	D717950274	O-ring	6		
18	D717950281	Ball bearing	1		
19	D717950358	B pad seal	1		
20	D717950386	EDC kit	2		
21	D717950393	SCR valve plug	1		
22	D717950400	SCR valve	4		
23	D717950407	Ring, piston	6		
24	D717950428	Plate, valve	1		
25	D717950435	Plate, valve	1		
26	D717950638	Retaining ring	1		
27	D717950792	Plug	8		
28	D717951065	O-ring	16		
29	D717951072	O-ring	8		
30	D717951079	O-ring	4		
31	D717951093	Plug	2		
32	D717952724	Spring	2		
33	D717952731	Retainer guide	2		
34	D717952738	Plug	2		
35	D717952745	ECD link	2		
36	D717952752	Purchased parts	2		
37	D717952759	Purchased parts	2		
38	D717952766	Swash plate	2		

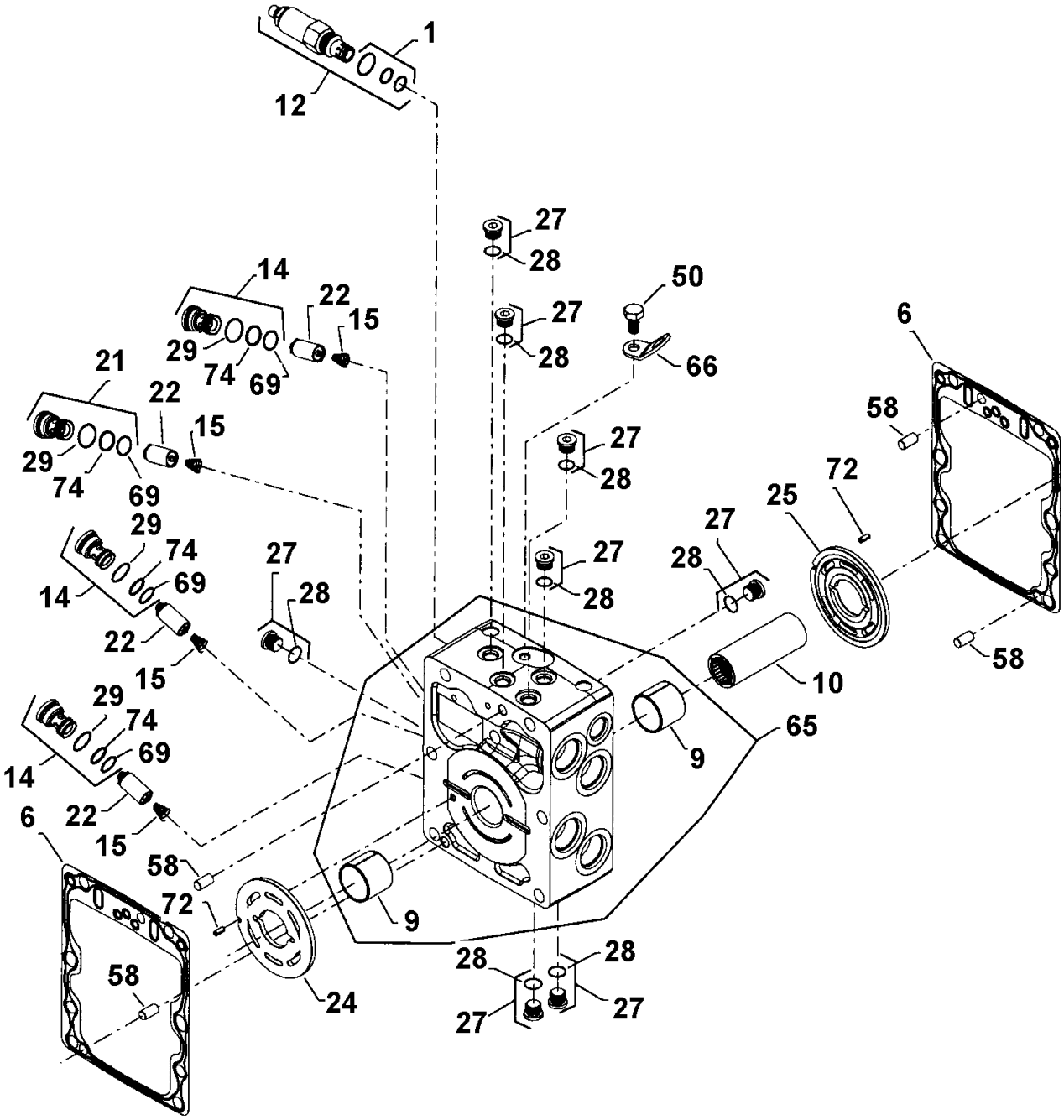
1
12
27
28
50
66
14
22
15
29
74
69
21
6
58
72
25
10
65
9
24

Item	Part No.	Name	Qty	L	SN INFO
39	D717952773	Flange cover	1		
40	D717952780	Housing	1		
41	D717952787	Flange housing	1		
42	D717952794	Lip seal	2		
43	D717952801	Slider block	2		
44	D717952808	Shaft tooth	1		
45	D717952815	Washer	2		
46	D717852822	Washer	2		
47	D717952829	Slipper retainer	2		
48	D717952836	Pin	4		
49	D717952913	Screw	4		
50	D717952920	Screw	1		
51	D717952941	Screw	12		
52	D717952962	Screw	8		
53	D717953074	Screw	2		
54	D717953088	Swash plate bearing kit	2		
55	D717953095	Hold-down pin	6		
56	D717953123	Screw	6		
57	D717953130	Retaining ring	1		
58	D717953137	Pin	4		
59	D717953543	O-ring	8		
60	D717953550	Coil kit	4		
61	D717953564	Lock ring	2		
62	D717953578	Locking plate	4		
63	D717953599	Servo piston	2		
64	D717953606	Piston kit	2		
65	D717953627	Center section	1		
66	D717953634	Lifting bracket	1		
67	D717953683	Servo cylinder	4		
68	D717953942	O-ring	2		
69	D717953963	O-ring	8		
71	D717953970	O-ring	12		
72	D717953984	Slotted pin	2		
73	D717954012	Plug	4		
74	D717954033	backup ring	8		
75	D717954040	Retaining ring	2		
76	D717954656	Seal overhaul kit	1		

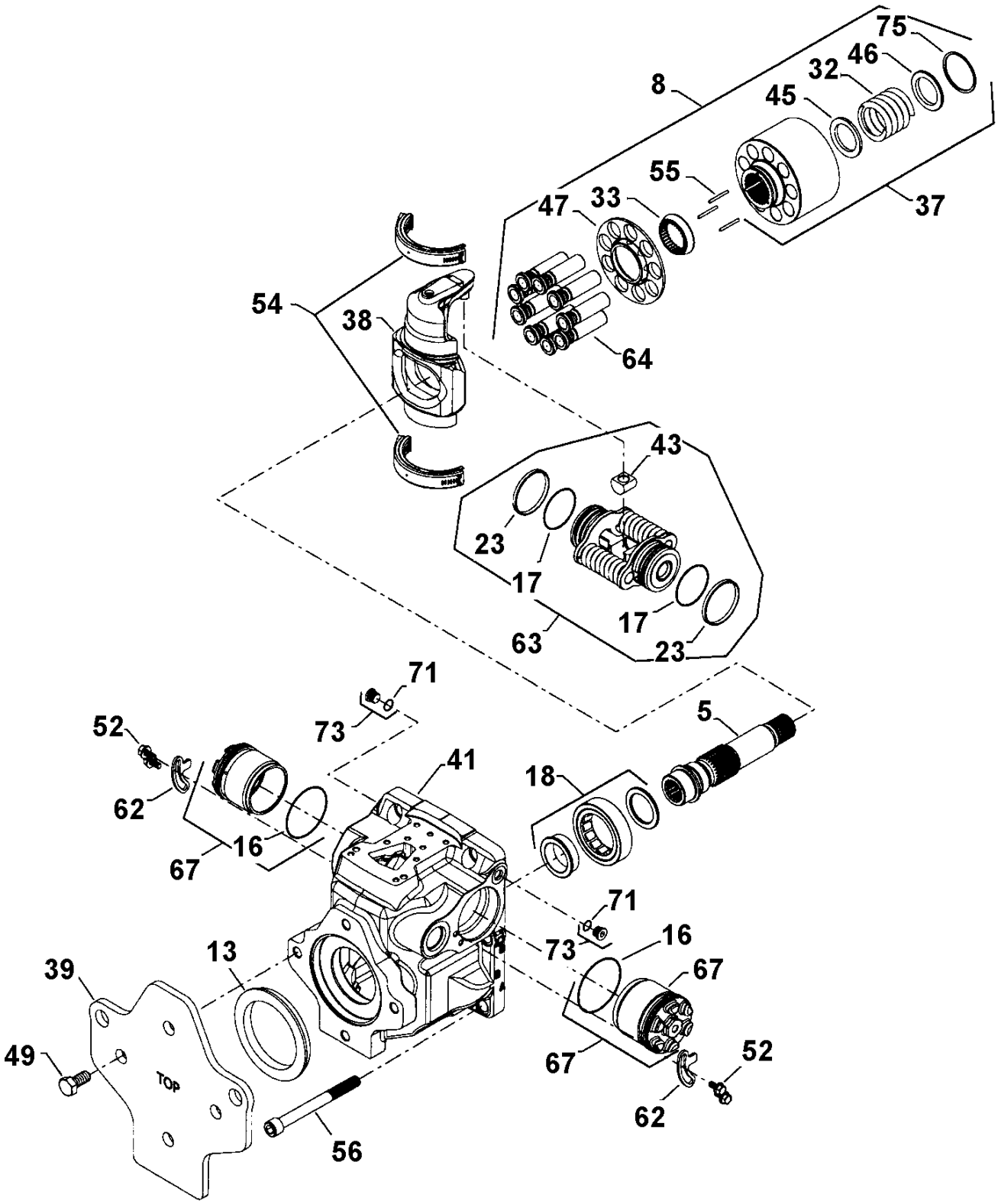
75
46
32
8
45
55
47
33
37
54
38
64
43
23
17
17
63
23
71
73
5
52
41
18
62
16
67
71
73
16
13
67
39
67
52
49
TOP
62
56

This page intentionally left blank

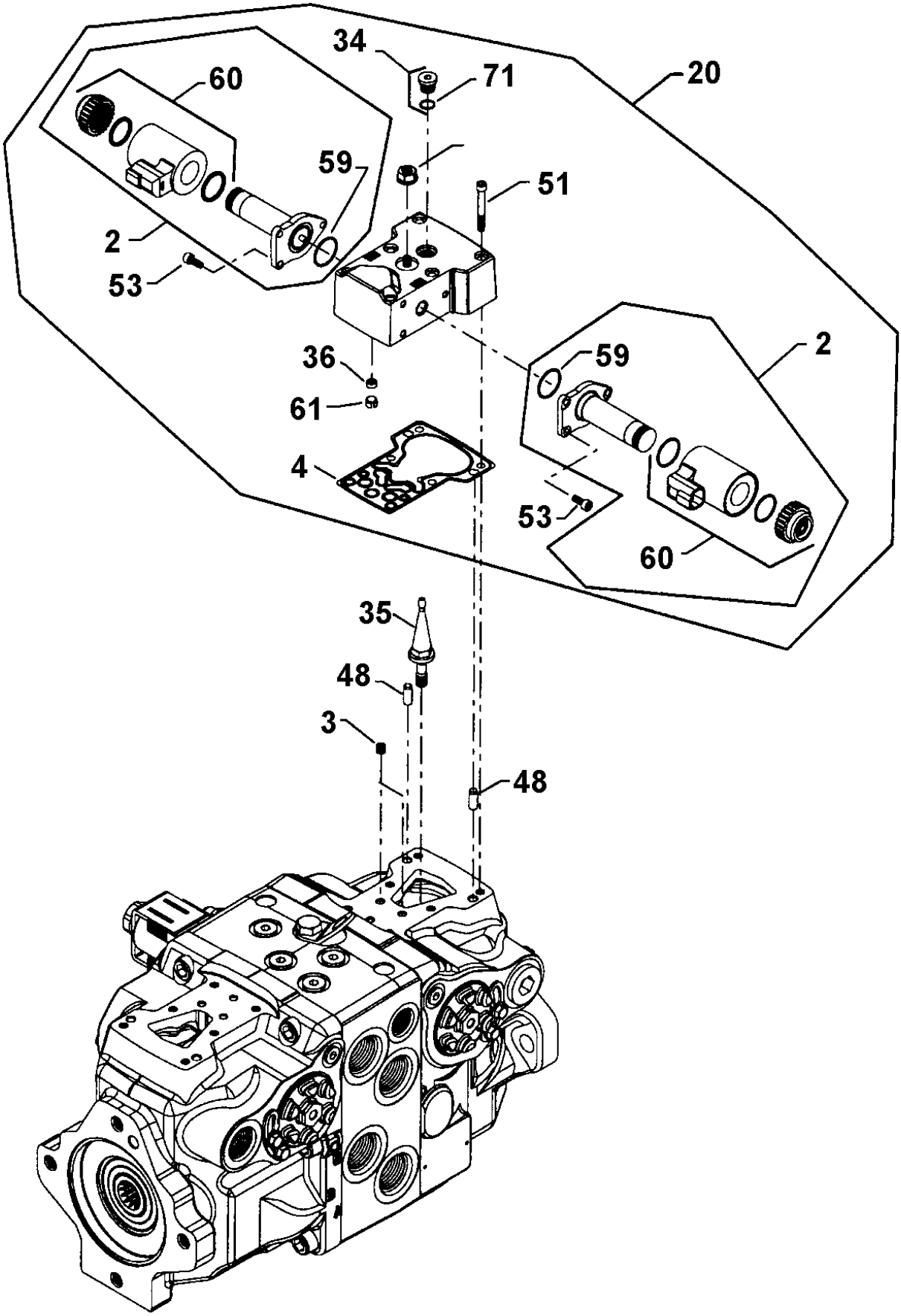
34
71
20
60
59
51
2
53
36
59
2
61
4
53
60
35
48
3
48

This page intentionally left blank

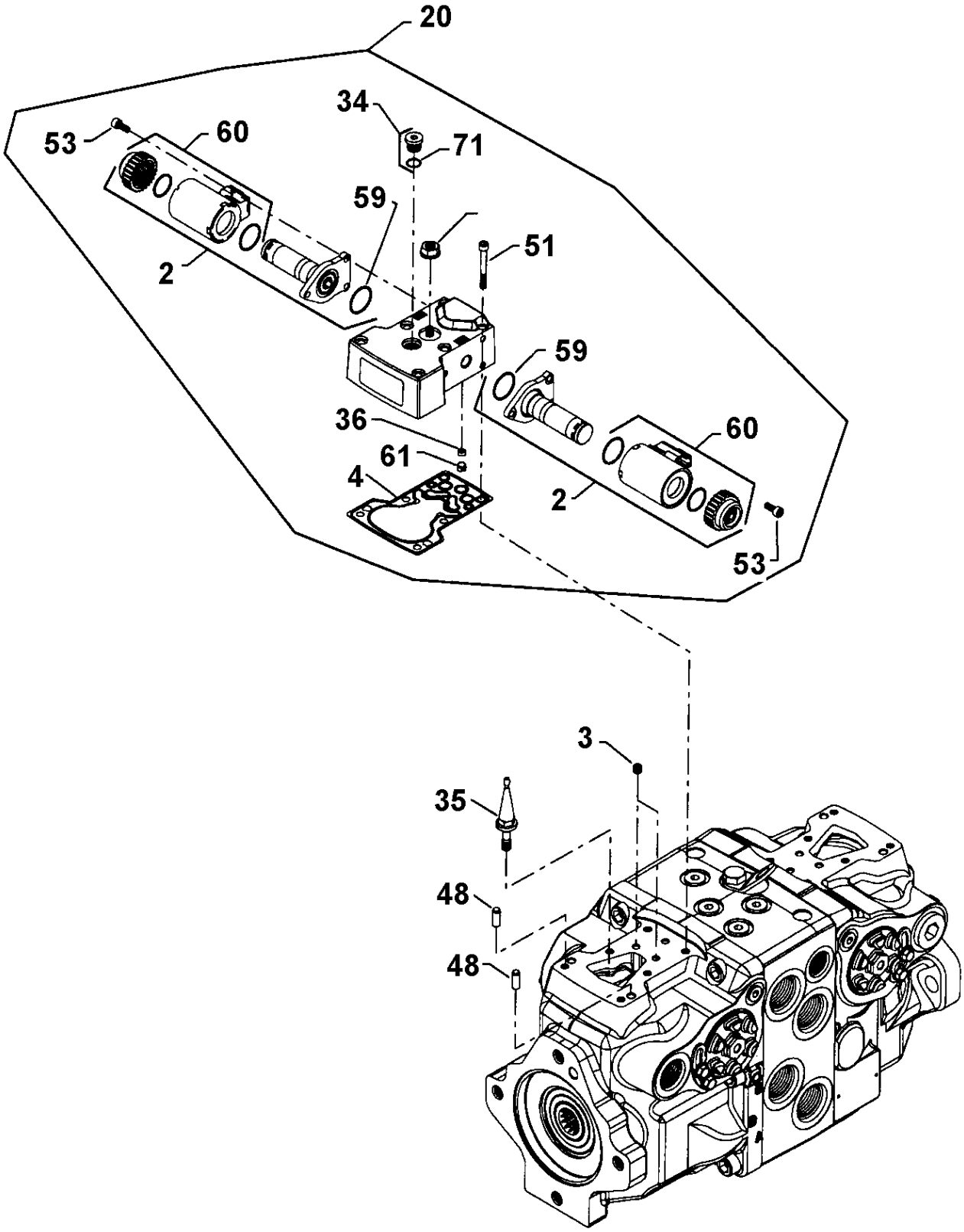
20
34
53
60
71
59
51
2
59
36
60
61
4
2
53
3
35
48
48

This page intentionally left blank

Pump drive, assembly D717193001 Pump, vibration

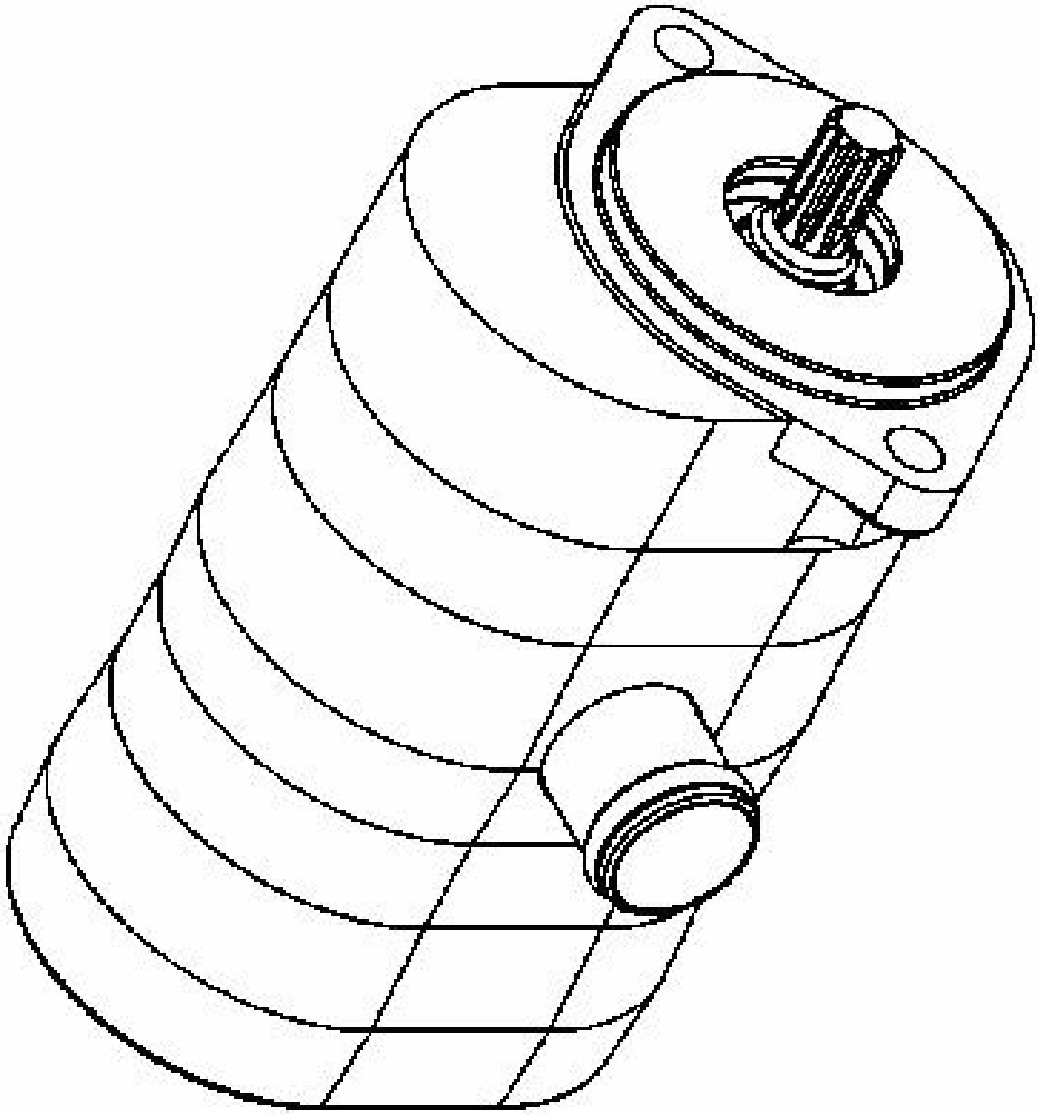

Item	Part No.	Name	Qty	L	SN INFO
1	D717950540	Seal kit	1		

Pump drive, assembly 4812222519 Gear pump, fan drive

NO DRAWING AVAILABLE FOR THIS BOM

Item	Part No.	Name	Qty	L	SN INFO
1	4812270279	Seal kit	1		

Pump drive, assembly D717193500 Pump, generator, assembly

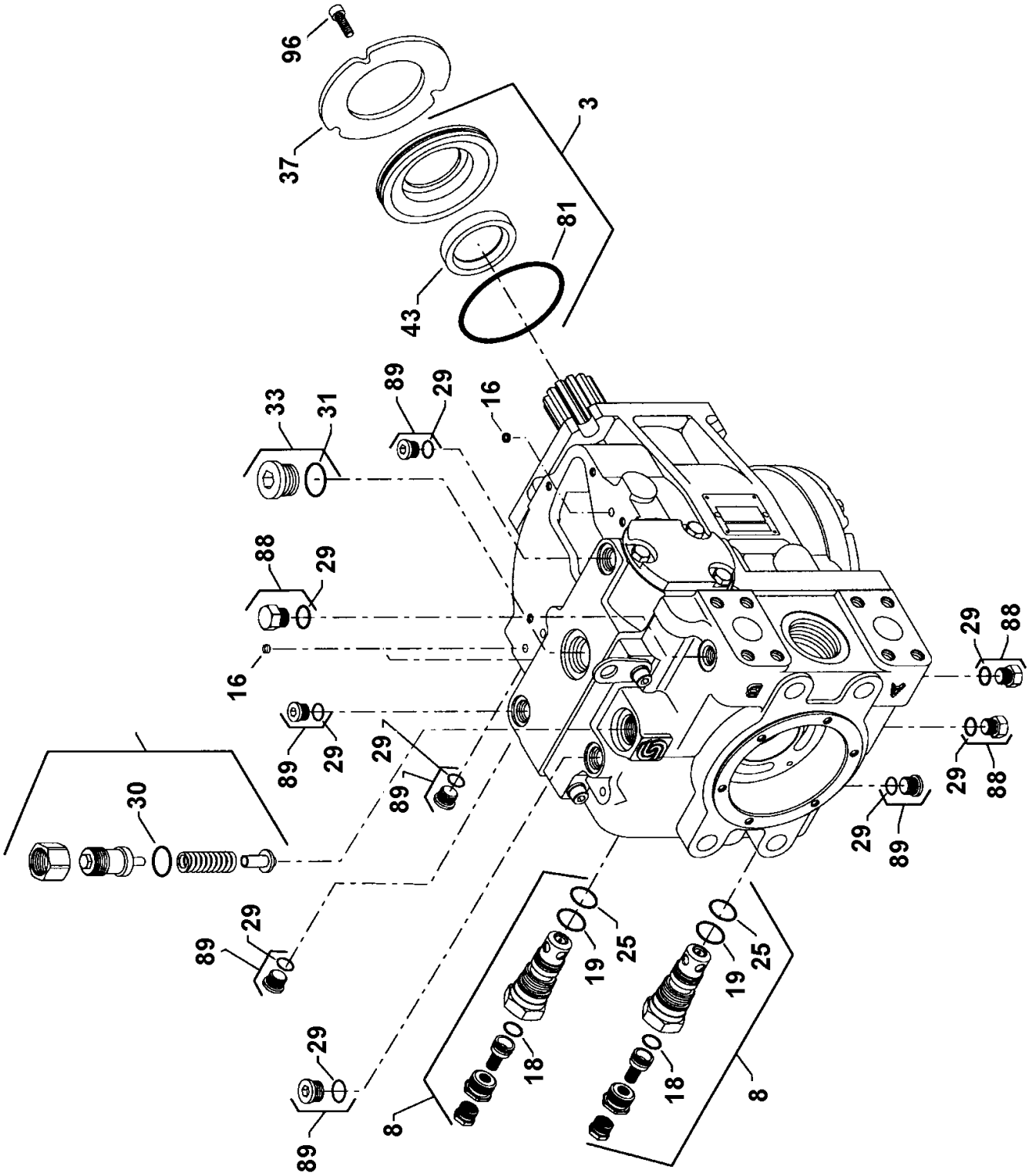

Item	Part No.	Name	Qty	L	SN INFO
1	D717950113	Ring, piston	2		
2	D717950120	Plate, valve	1		
3	D717950127	Shaft seal assembly	1		
4	D717950253	Bearing, roller	1		
5	D717950288	Charge pump set	1		
6	D717950295	Gasket	2		
7	D717950302	EDC kit	1		
8	D717950309	Multifunction valve kit	2		
9	D717950316	Cylinder block kit	1		
10	D717950323	Bushing	2		
11	D717950330	Journal bearing	1		
12	D717950337	Charge pump cover	1		
13	D717950351	Gasket	2		
14	D717950358	B pad seal	2		
15	D717950372	Charge pump shaft	1		
16	D717950379	Screen, control filter	3		
17	D717950554	Key	1		
18	D717950561	O-ring	4		
19	D717950568	O-ring	4		
20	D717950575	O-ring	4		
21	D717950582	O-ring	4		
22	D717950589	O-ring	4		
23	D717950596	O-ring	2		
24	D717950603	O-ring	2		
25	D717950610	O-ring	4		
26	D717950624	Pin	1		
27	D717950645	Retaining ring	1		
28	D717950701	PCP	1		
29	D717951065	O-ring	10		
30	D717951072	O-ring	2		
31	D717951079	O-ring	2		
32	D717951086	Pin	2		
33	D717951093	Plug	2		
34	D717952892	Spring	2		
35	D717952976	Side cover insert	1		
36	D717952983	Retaining plate	1		
37	D717952990	Retaining plate	1		

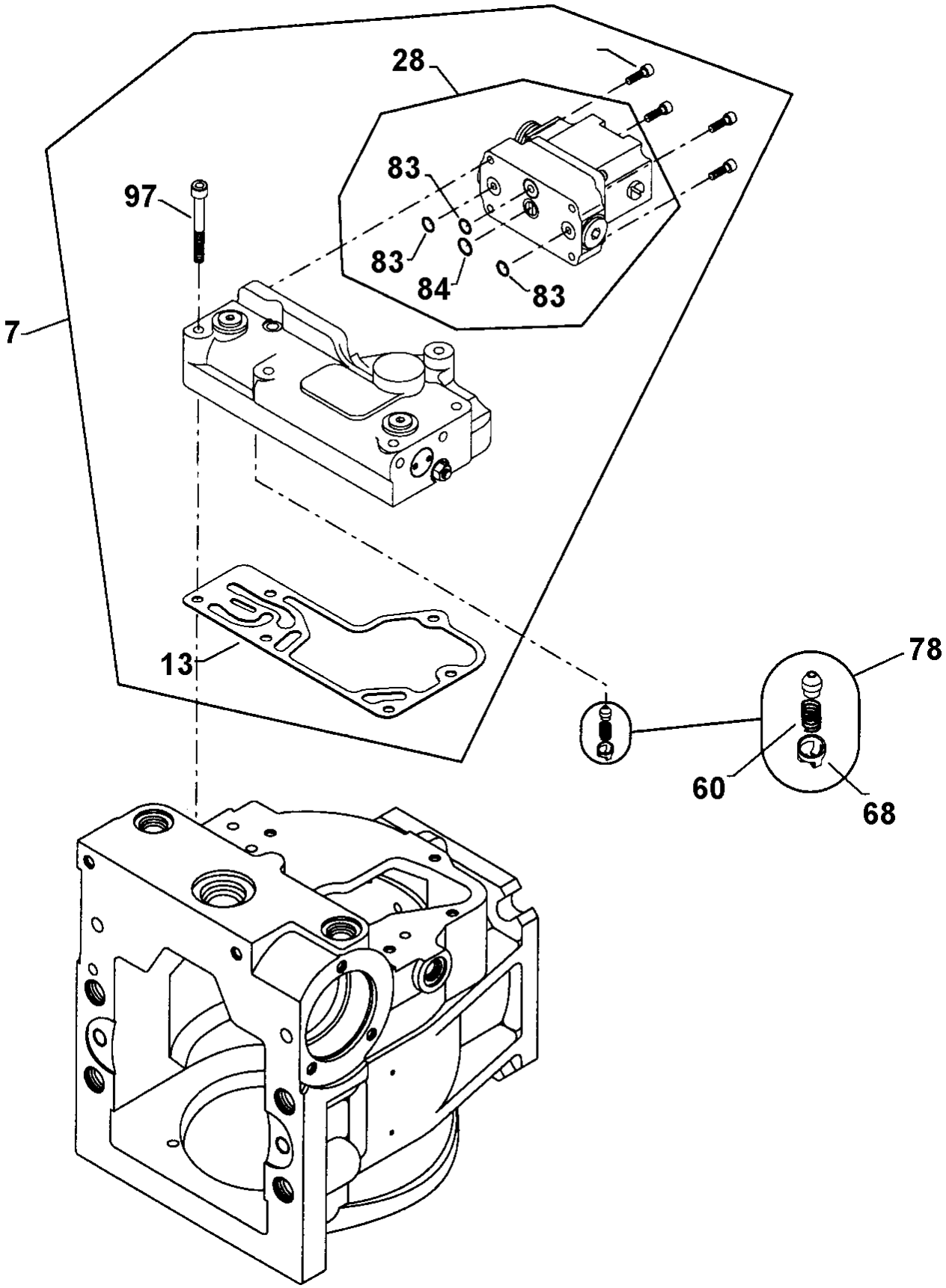
28
83
97
83
84
83
7
13
78
60
68

Item	Part No.	Name	Qty	L	SN INFO
38	D717952997	Spring seat	2		
39	D717953004	Bearing	1		
40	D717953011	Socket screw	4		
41	D717953018	Servo arm	1		
42	D717953025	Screw	1		
43	D717953032	Lip seal	2		
44	D717953067	Piston	9		
45	D717953102	Screw	12		
46	D717953109	Plug	1		
47	D717953284	Guide post	2		
48	D717953291	Feedback link	1		
49	D717953305	Slipper guide	1		
50	D717953319	Spring seat	1		
51	D717953326	Spring retainer	1		
52	D717953333	Spline shaft	1		
53	D717953340	Coupling	1		
54	D717953347	Slipper guide bearing	2		
55	D717953354	Cage locator link	1		
56	D717953361	End cap	1		
57	D717953368	Spacer	4		
58	D717953375	Flange adapter	1		
59	D717953389	Swash plate	1		
60	D717953410	Spring	1		
61	D717953431	Piston ring	2		
62	D717953438	Check valve	2		
63	D717953452	Lifting bracket spacers	1		
64	D717953459	Lifting bracket	1		
65	D717953473	Flange cover	1		
66	D717953501	Shim	2		
67	D717953508	Pin	1		
68	D717953515	Spring retainer	1		
69	D717953522	Variable swash plate	1		
70	D717953529	Side cover	1		
71	D717953536	Variable housing	1		
72	D717953585	Spring	1		
73	D717953613	Cylinder block	1		
74	D717953641	Servo piston	1		

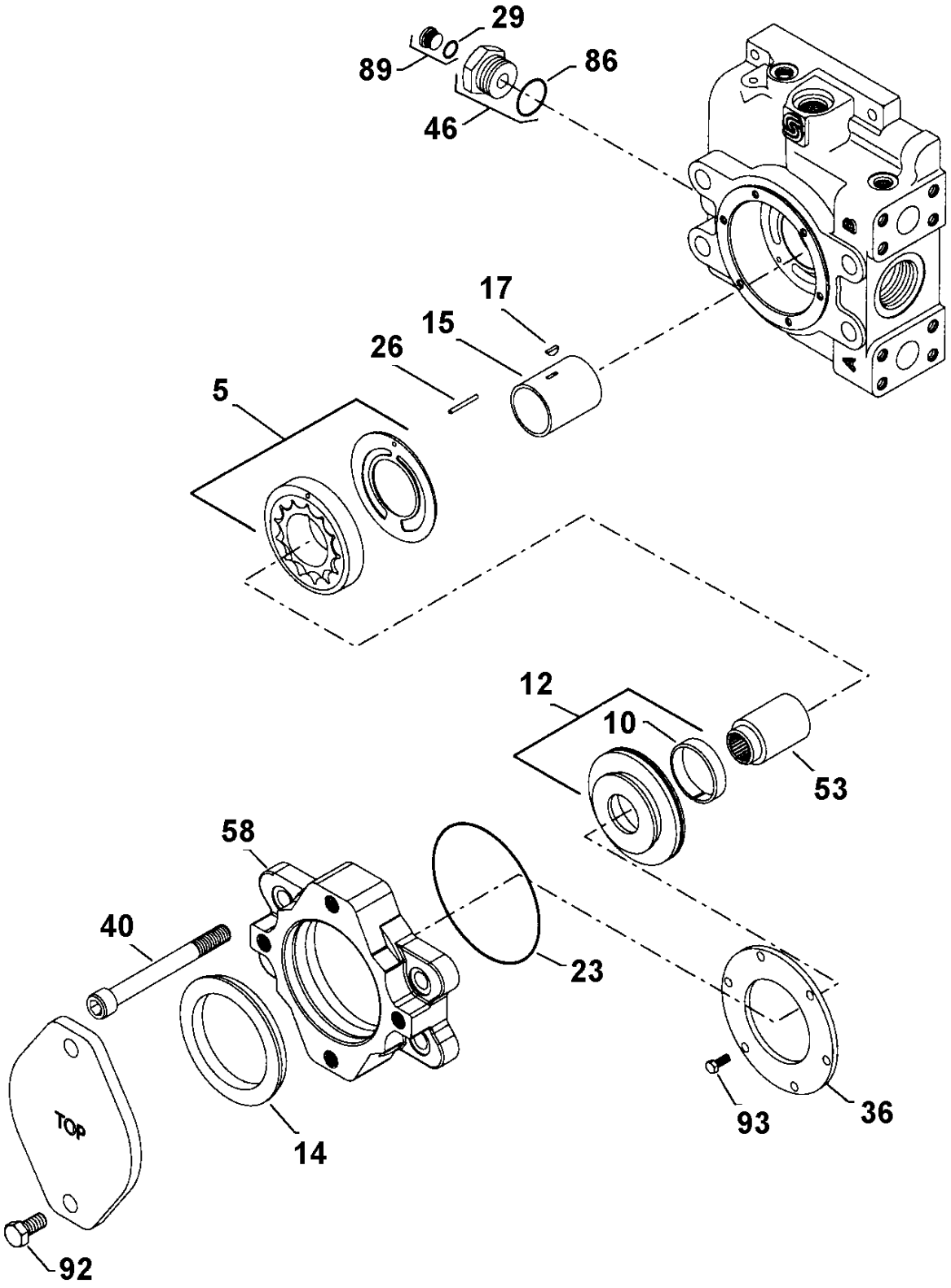
29
89
86
46
17
15
26
5
12
10
53
58
40
23
TOP
14
93
36
92

Item	Part No.	Name	Qty	L	SN INFO
75	D717953648	Leveler	1		
76	D717953669	Servo cylinder	2		
77	D717953697	Slider block	1		
78	D717953858	Control orifice kit	1		
79	D717953872	K09 charge relief valve kit	1		
80	D717953886	Nut	4		
81	D717953928	O-ring	2		
82	D717953935	O-ring	1		
83	D717953949	O-ring	4		
84	D717953956	O-ring	2		
85	D717953970	O-ring	2		
86	D717953977	O-ring	2		
87	D717953998	Spiral pin	1		
88	D717954005	Plug	3		
89	D717954019	Plug	7		
90	D717954026	Plug	2		
91	D717954047	Retaining ring	1		
92	D717954061	Screw	2		
93	D717954068	Screw	6		
94	D717954075	Screw	6		
95	D717954103	Screw	8		
96	D717954110	Screw, metric	3		
97	D717954117	Screw	6		
98	D717954124	Screw	2		
99	D717954152	Screw	1		
100	D717954159	Washer	1		
101	D717954166	Washer	1		
102	D717953865	Seal overhaul kit	1		

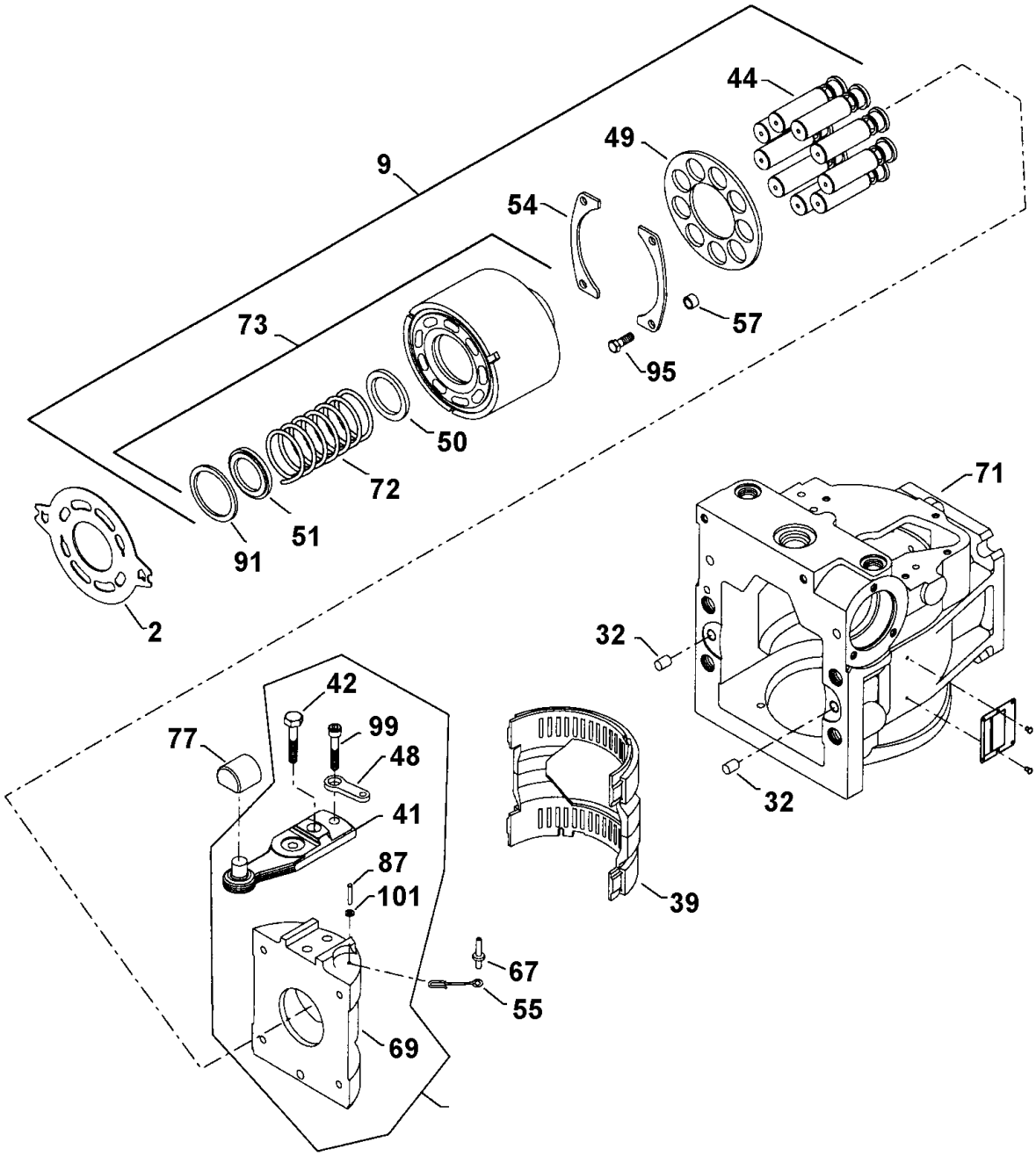
44
49
9
54
57
73
95
50
72
71
51
91
2
32
42
99
77
48
41
32
87
101
39
67
55
69

This page intentionally left blank

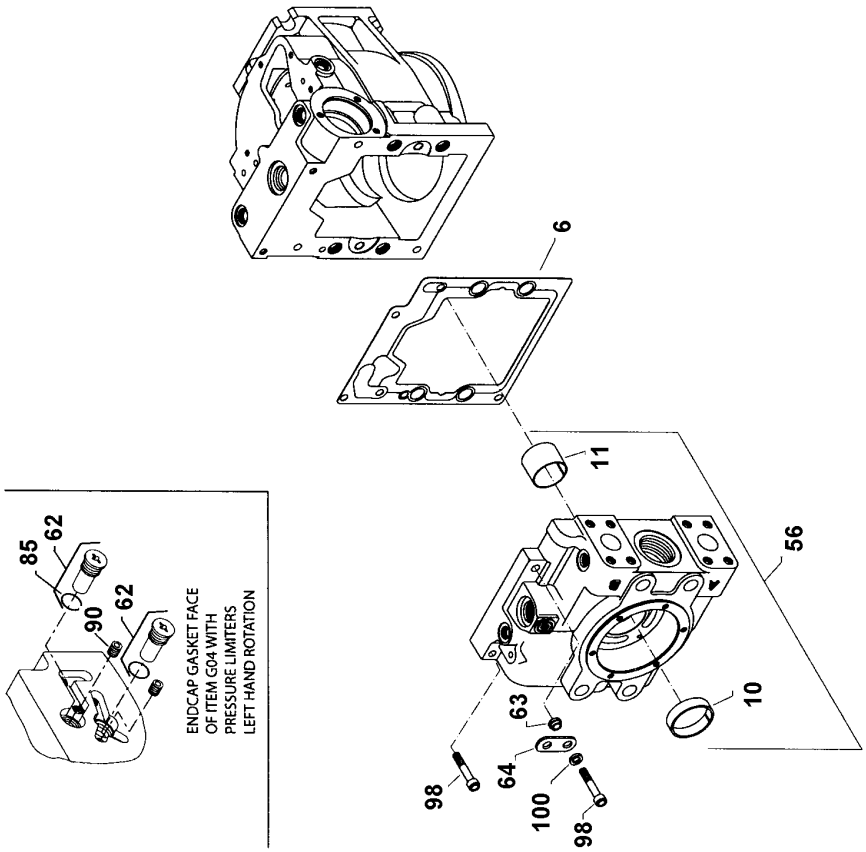
6
11
56
10
63
64
100
98
98
85
62
90
62
ENDCAP GASKET FACE
OF ITEM G04 WITH
PRESSURE LIMITERS
LEFT HAND ROTATION

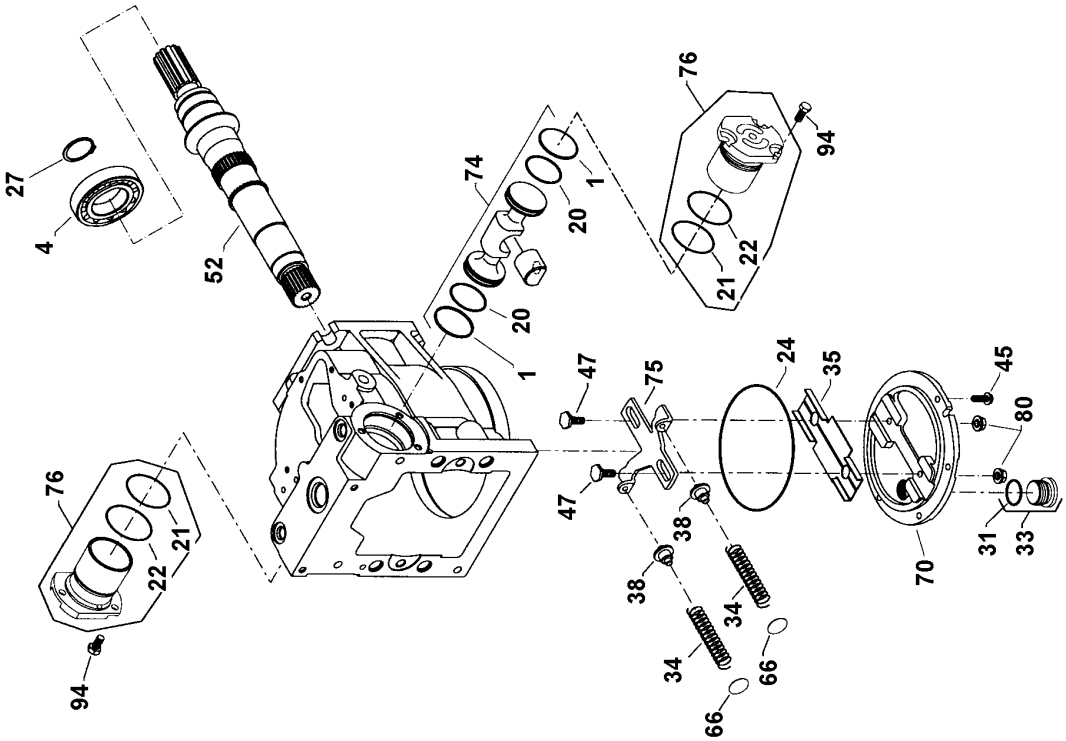
27
4
52
74
20
1
20
1
76
94
21
22
76
21
22
94
47
47
75
24
35
45
80
38
38
34
34
66
66
70
31
33

This page intentionally left blank

Pump drive, assembly Fittings, assembly

NO DRAWING AVAILABLE FOR THIS BOM

Item	Part No.	Name	Qty	L	SN INFO
1	D717802346	Union	5		
2	D717909505	Hose reel	9		
3	4812200226	Elbow	3		
4	4812200526	Elbow	2		
5	D717802192	Flange elbow	1		
6	D717801415	Elbow	1		
7	4812200398	Test port, male	1		
8	D717800066	Adapter, 12-12	2		
9	4812200205	Fitting	1		
10	D717800176	Elbow, 16-16	3		
11	D717800288	Adapter, straight	2		
12	D717800155	Fitting	4		
13	D717800218	Adapter, 16-16	4		
14	D717800148	Elbow	2		
15	D717800085	Elbow, 12-12	2		
16	D717800134	Flange	6		
17	D717801408	Union	1		
18	D717800211	Flange	1		
19	D717800281	Straight	2		
20	D717800099	Elbow, 12-12, 45 deg	1		
21	4812249411	Adapter	1		

Electrical system, assembly Electrical System Assembly

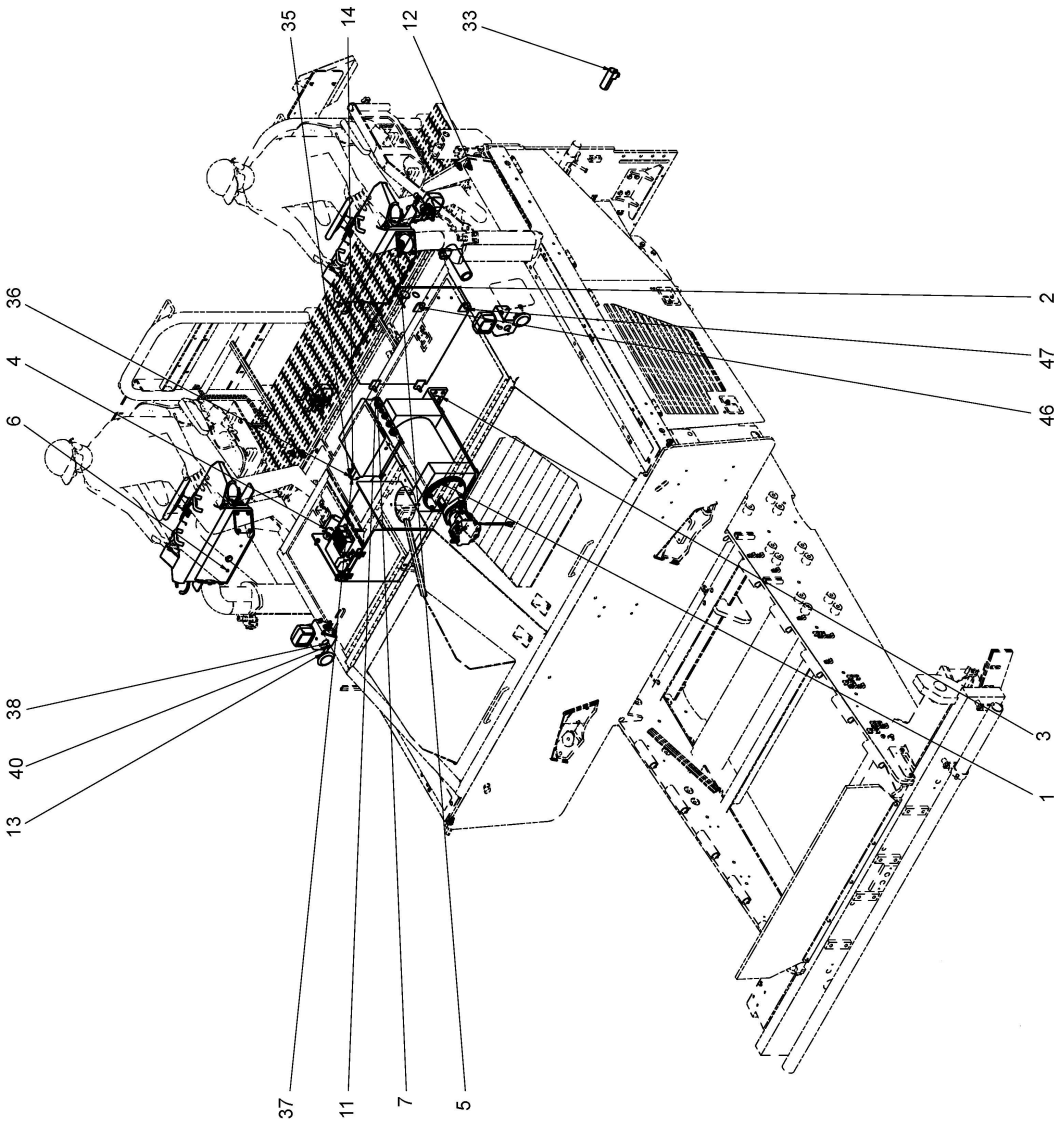

Item	Part No.	Name	Qty	L	SN INFO
1	4812240639	Generator drive	1		
2	4812246972	Assembly, DC box F1000 T4F	1		
3	4812223608	Generator mount	1		
4	4812223611	Assembly, battery box	1		
5	4812246958	Assembly, operator console LH	1		
6	4812246959	Assembly, operator console RH	1		
7	D717104500	Assembly, AC main panel	1		
10	D717101019	Grommet	1		
11	D717101020	Grommet	1		
12	4812223623	Lighting system	1		
13	D717101016	Horn, disc 24V	2		
14	D717101508	Alarm 24V, reverse indication	1		
15	4812220981	Work function harness	1		
01	4812313046	Resisiter (2.5 kohm)	2		
16	4812246967	Harness ECM F1000 T4F	1		
17	4812222237	Rear functions harness	1		
20	4812220980	Front functions harness	1		
21	4812220988	Harness, engine can	1		
22	4812200533	Harness, starter	1		
23	4812220982	After treatment system	1		
24	4812200535	Cable, alternator neg	1		
25	D717101031	Cable, starter NEG term to chassis ground	1		
26	D717101055	Cable, generator to mainframe	1		
27	4812221067	Cable, battery negative	1		
28	4812221066	Cable, F3 fuse to XB	1		
29	4812221070	Coil cable, auger sensor	2		
30	4812220979	Coil cable, conveyor	2		
31	D717146000	Schematic, AC electrical system	1		
33	4812222246	Auger and conveyor controls	1		
34	4812221582	Screed replacement plug	1		
35	D938155547	Hexagon bolt	2		
36	0301232100	Washer DIN125	4		
37	0291112854	Hexagon nut	2		
38	0147132503	Hex head screw	2		
39	0291111000	Nut DIN985	6		
40	0301233500	Plain washer(A) 8.4 x 16 x 1.6	8		
42	0301234400	Washer plain	5		

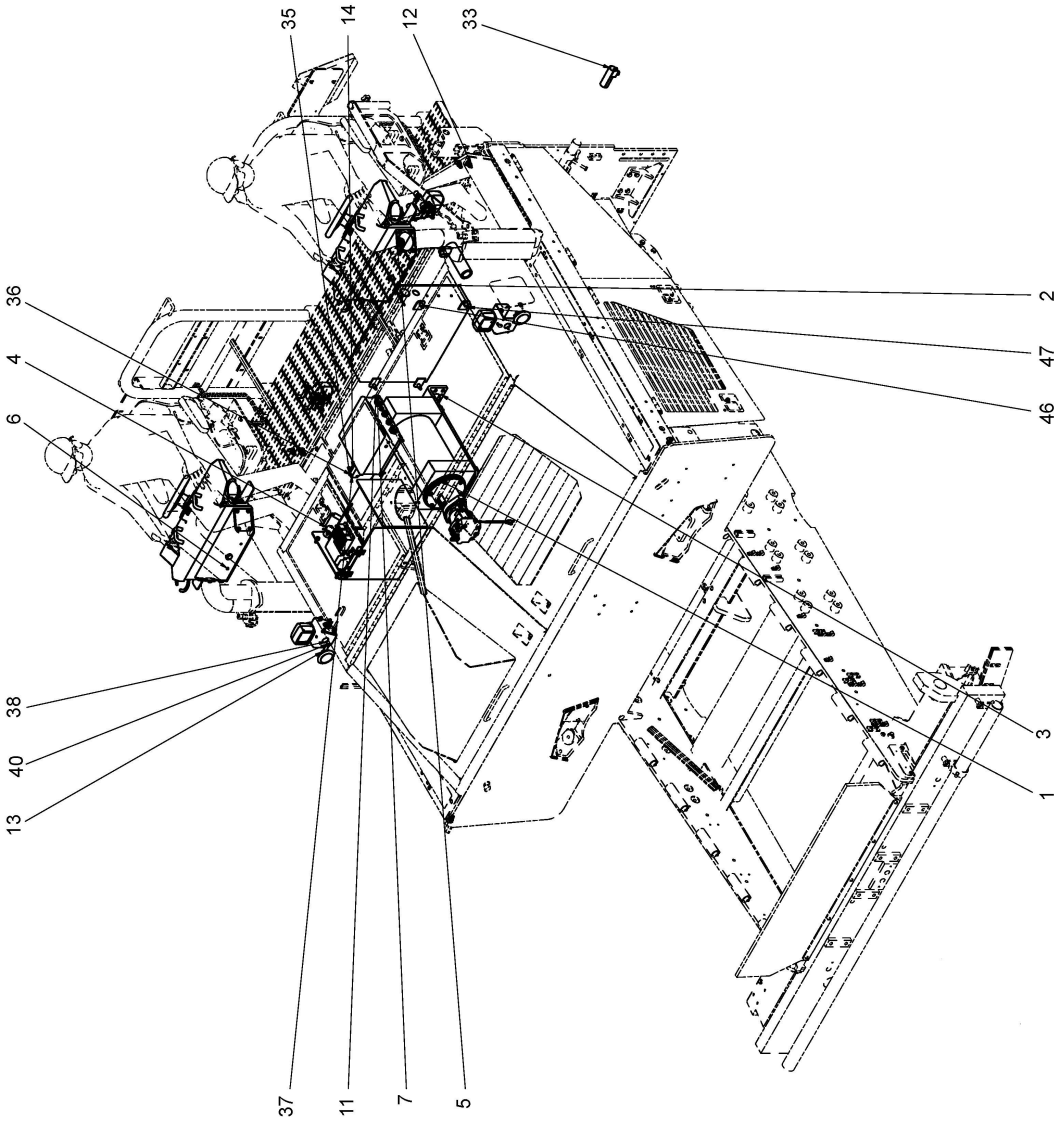
35
14
12
33
36
4
6
38
40
13
37
11
7
5
2
47
46
3
1

Item	Part No.	Name	Qty	L	SN INFO
45	0147136003	Hexagon bolt	1		
46	4812224391	Bushing	4		
47	0147136503	Screw	4		
48	4812246946	Schematic, DC electronical system	1		
49	4812244885	Dust cap on back wall	1		

Generator drive Generator drive

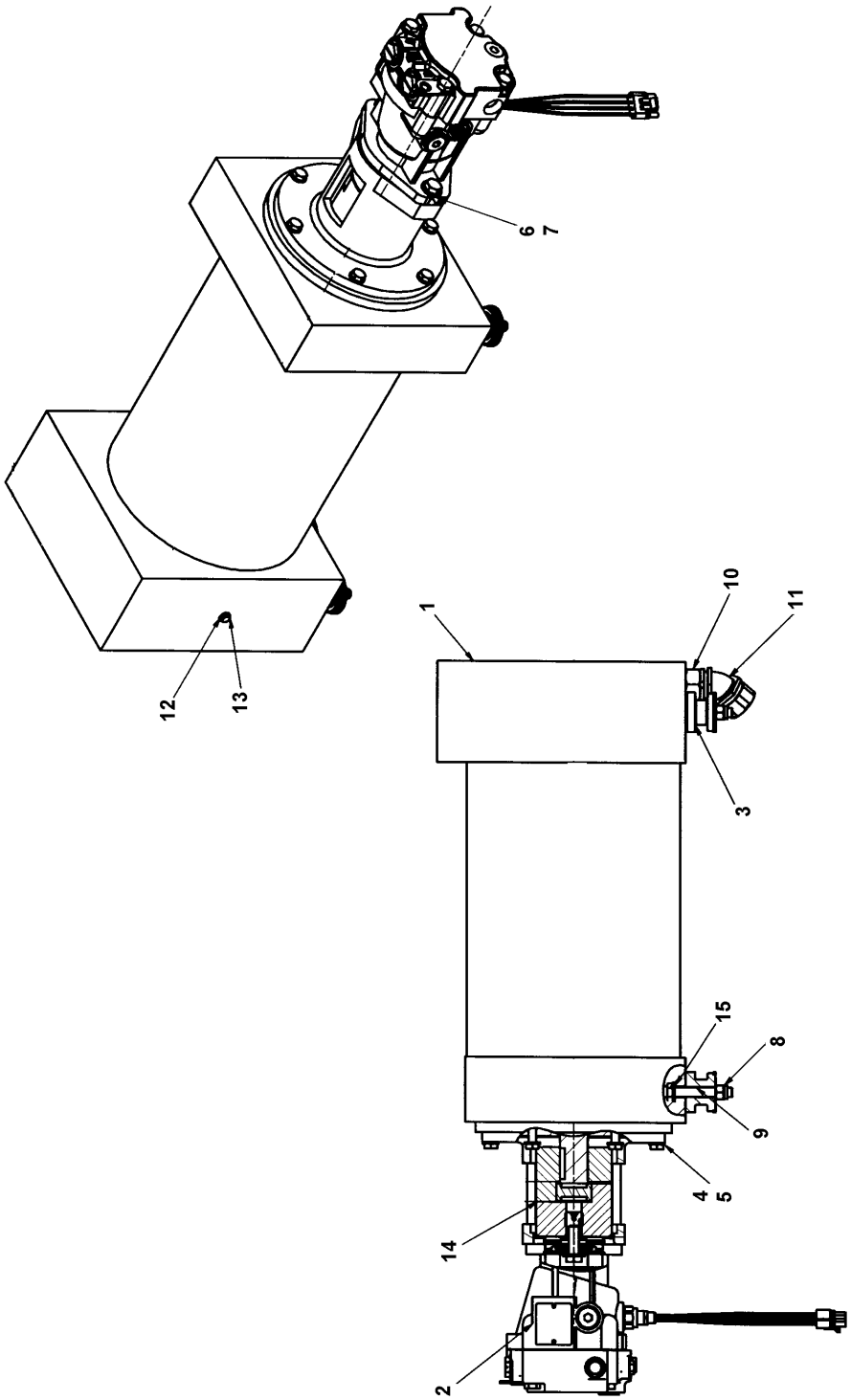

Item	Part No.	Name	Qty	L	SN INFO
1	D717100501	Generator	1		
2	D717100506	Motor, hydraulic	1		
3	D717100505	Mount, generator isolator	4		
4	D717801135	Washer, 10mm	6		
5	D717800484	Screw, M10	6		
6	D717801086	Flat washer, 0.5'	2		
7	D717800736	Screw, 1/2'	2		
8	0291111200	Lock nut	4		
9	0147141003	Hex head screw	4		
10	4812200229	Conduit hub	1		
11	4812200230	Elbow, 1'	1		
12	4700904639	Washer, M6	1		
13	0147124403	Hex head screw M6 x 12	1		
14	4812240640	Kit, lovejoy coupling	1		
15	0301235800	Plain washer(A) 13 x 24 x 2.5	4		

Generator drive D717100501 Generator

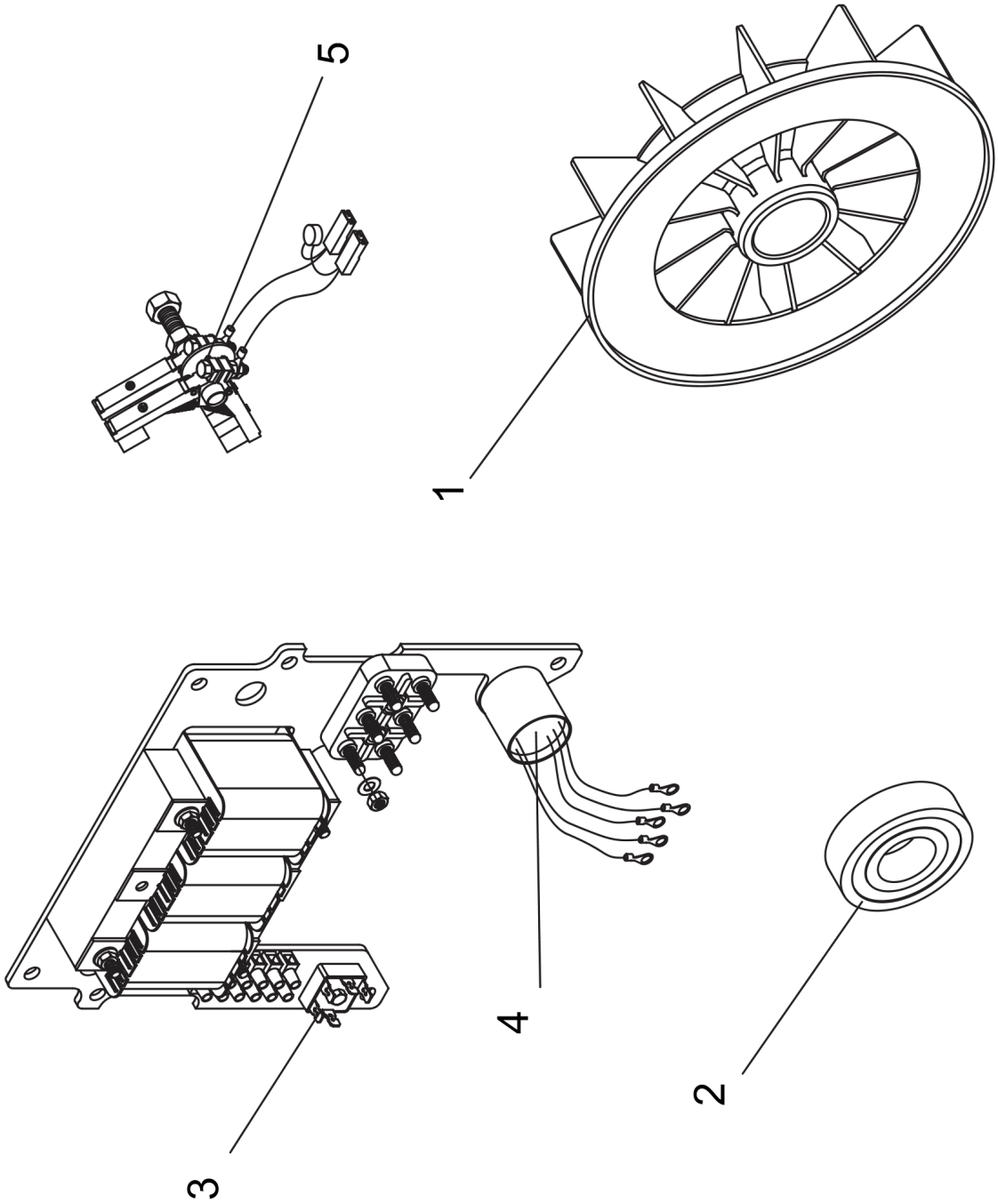

Item	Part No.	Name	Qty	L	SN INFO
1	4812313143	Fan	1		
2	4812313144	Bearing	1		
3	4812313145	Rectifying bridge	1		
4	4812313146	EMC filter for G series	1		
5	4812313147	Brush-holder assembly	1		
6	D717954768	Mount, motor, two bolt	1		

Generator drive Kit, lovejoy coupling

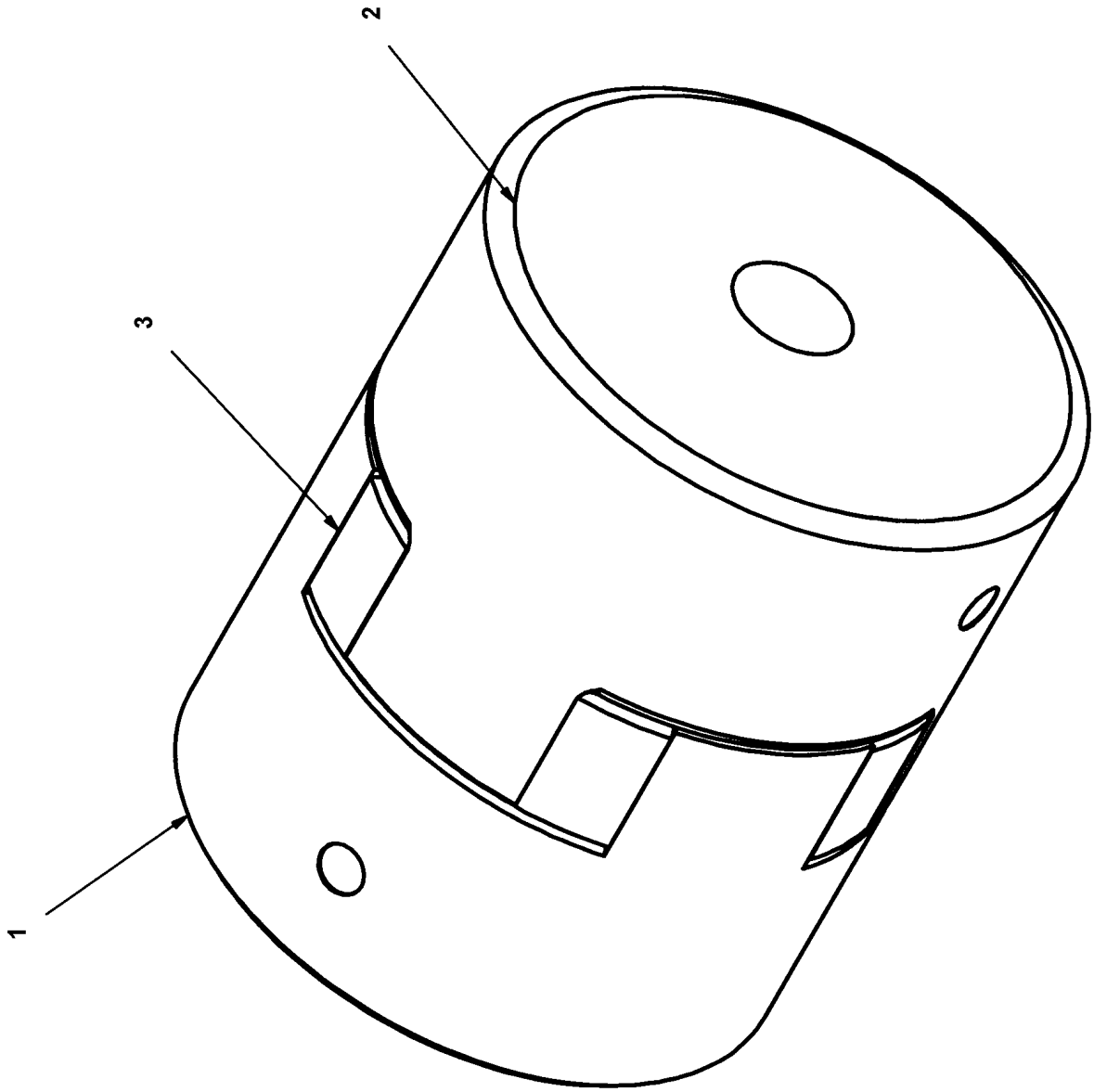

Item	Part No.	Name	Qty	L	SN INFO
1	D717100502	Coupling, 35mm	1		
2	4812200085	Coupling, splined	1		
3	4812200086	Coupling, spider	1		

Electrical system, assembly 4812246972 Assembly, DC control panel

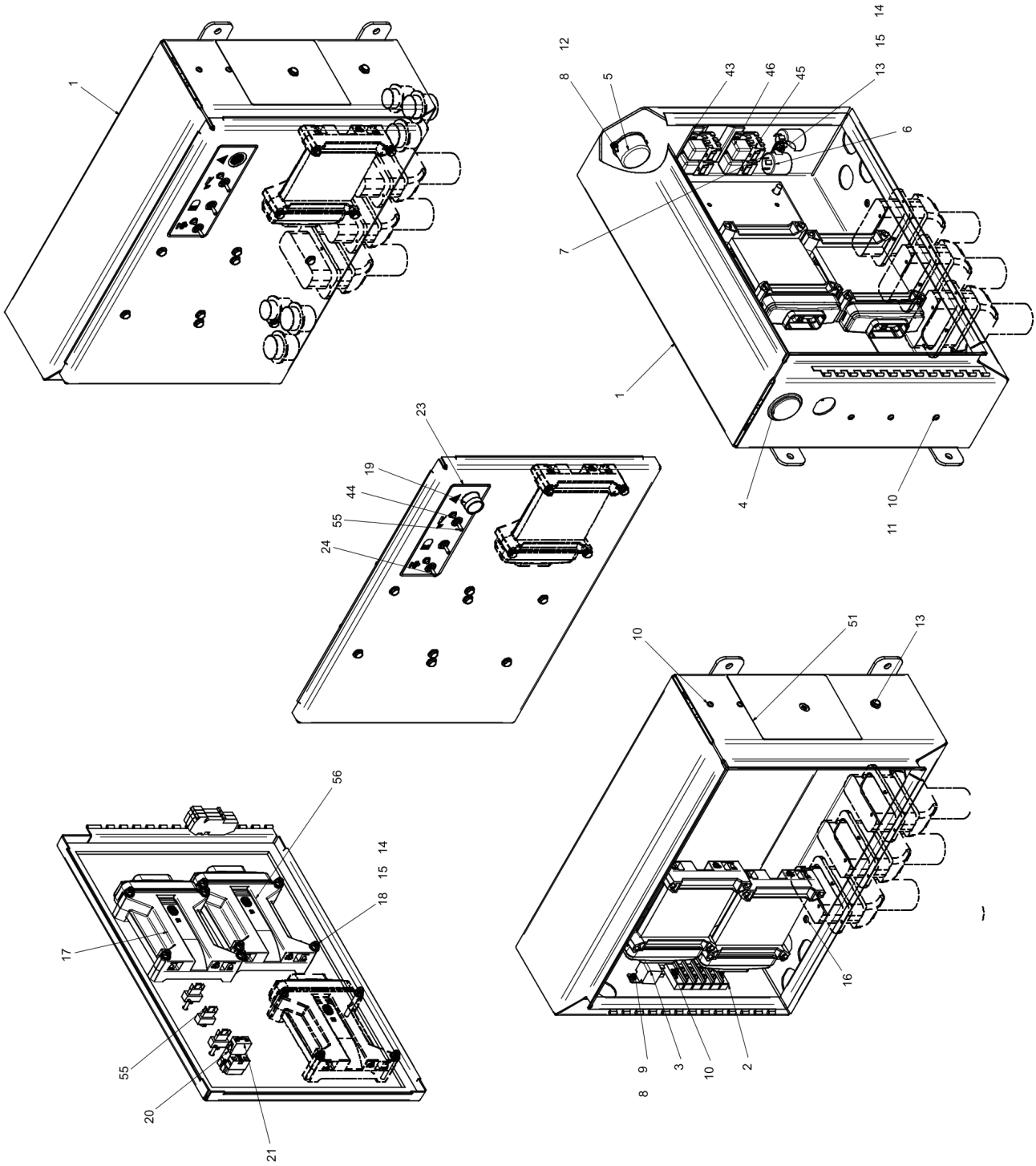

Item	Part No.	Name	Qty	L	SN INFO
1		Enclosure	1		
2	D717104037	Barrier block	1		
3	D717104039	Relay, 80A	1		
4	D717101007	Hour meter	1		
5	D717101515	Inclinometer	1		
6	D717104010	Flasher, 24V	2		
7	D717104038	P clamp, 1.25'	2		
8	D717800869	Lock nut, M8	9		
9	D717800953	Screw, M8	5		
10	D717801093	Washer, 0.164'	11		
11	D717800967	Hex nut, M8	2		
12	D717800946	Hex nut, M8	2		
13	D717800687	Screw, 1/4'	2		
14	D717801058	Narrow flat washer, 0.25'	28		
15	D717800785	Nyloc nut, 1/4'	14		
16	D717103026	Rubber grommet, 5/16'	2		
17	4812200424	Propel system controller	1		
18	D717800666	Screw, 1/4'	12		
19	D717104011	Push button, warning lights	1		
20	D717103017	Maintained action block	1		
21	D717103016	NO contact	1		
23	4812220723	Decal, DC control panel	1		
24	4812220724	Toggle switch	1		
25	4812220725	Slotted din rail	3		
26	D717104017	End stop, terminal block	8		
27	D717104003	Relay base	5		
28	D717104005	Relay, 24V	5		
29	D717104004	Diode, relay surge protection	5		
30	D717104008	Surge protect diode	1		
31	D717104041	Relay, 24V	1		
32	D717104042	Relay base, 24V	1		
33	D717104006	Relay latch	1		
34	D717104007	Base, latch relay	1		
35	D717104033	End plate, 2 wire fuse block	1		
36	D717104029	Block terminal, 2-wire	34		
37	D717104023	End plate, 4-wire terminal block	11		
38	D717104016	Terminal block, 4-wire	53		

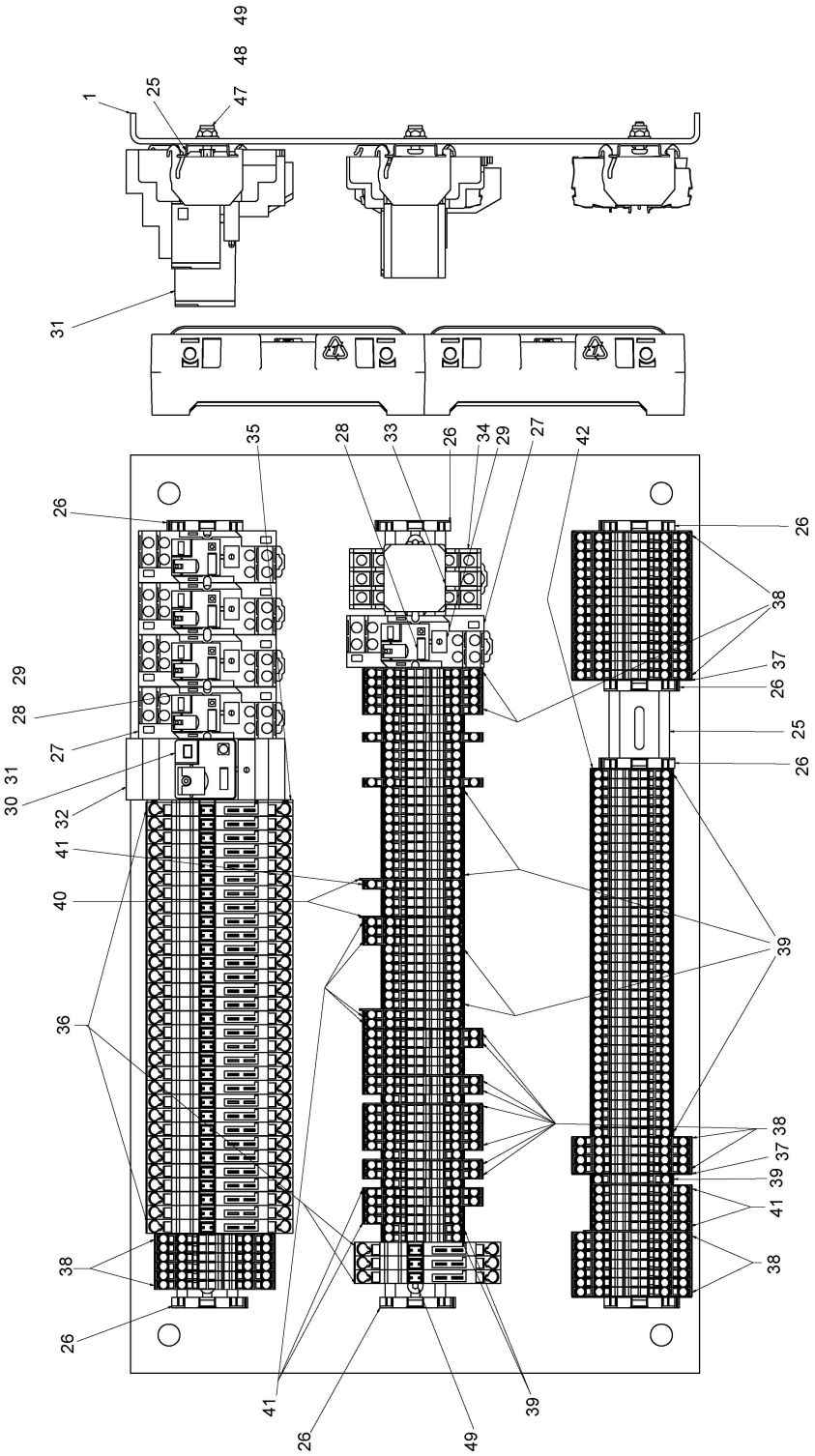
1
25
49
48
47
31
26
29
28
27
30
31
32
41
40
36
38
26
35
28
33
26
34
29
27
42
26
38
37
26
25
26
39
38
37
39
41
38
41
26
49
39

Item	Part No.	Name	Qty	L	SN INFO
39	D717104014	Terminal block, 2-wire	72		
40	D717104022	End plate, 3-wire terminal block	4		
41	D717104015	Terminal block. 3-wire	16		
42	D717104021	End plate, 2-wire terminal block	2		
43	4812220726	DC relay mount plate	1		
44	D717103013	LED, yellow	2		
45	4812220727	Mini relay socket	4		
46	4812220728	Relay, 24V	4		
47	D717800883	Lock nut, M10	6		
48	D717801142	Washer, 10	6		
49	D717801016	Screw, M10	6		
51	4812248719	Decal fuse list	1		
52	D717104012	Clip hold down, control relay	4		
53	D717104013	Clip hold down, latch relay	1		
54		Wiring diagram, DC box F1000	1		
55	4812222170	Toggle switch	2		
56	4812200425	Controller, ac/fan system	1		

4812223611 Assembly, battery box Assembly, battery box

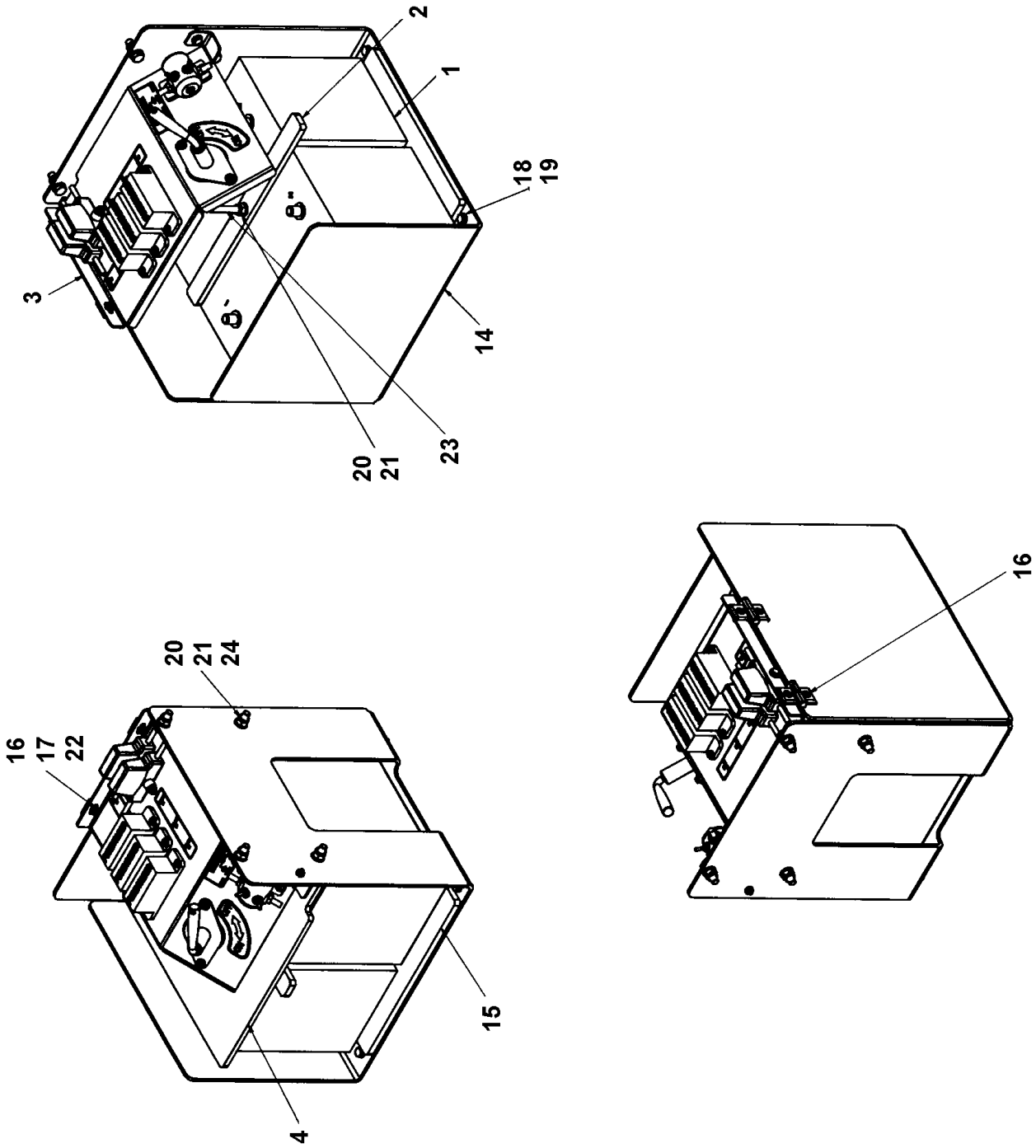

Item	Part No.	Name	Qty	L	SN INFO
1	4812223825	Battery	2		
2	4812223612	Crossbar, battery tie down	1		
3	4812220887	Battery switch mount	1		
4	4812220962	Battery box rubber mat	1		
5	D717101029	Cable, battery, pos term to neg term	1		
6	D717101030	Cable, battery, pos term to bat disc sw	1		
7	D717101032	Cable, battery disc sw to F1 fuse	1		
8	D717101033	Cable, battery disc sw to F2 fuse	1		
9	D717101034	Cable, battery disc sw to F4 fuse	1		
10	D717101035	Cable, F1 fuse to F3 fuse	2		
11	D717101038	Cable, F1 fuse to R1 (starter relay) contact	1		
12	D717101052	Cable, F7 fuse to R1 starter relay	1		
13	D717101049	Harness, alternator-air	1		
14	4812223617	Battery box	1		
15	4812222278	Battery box rubber mat	1		
16	4812222211	Hinge	2		
17	4812222135	Hexagon nut	4		
18	0301233500	Plain washer(A) 8.4 x 16 x 1.6	4		
19	0147132503	Hex head screw	4		
20	0291118549	Hexagon nut	5		
21	0301234400	Washer plain	9		
22	0301232100	Washer DIN125	4		
23	4812223626	J-bolt	1		
24	4812223295	Hexagon bolt	4		

4812223611 Assembly, battery box 4812220887 Battery switch mount

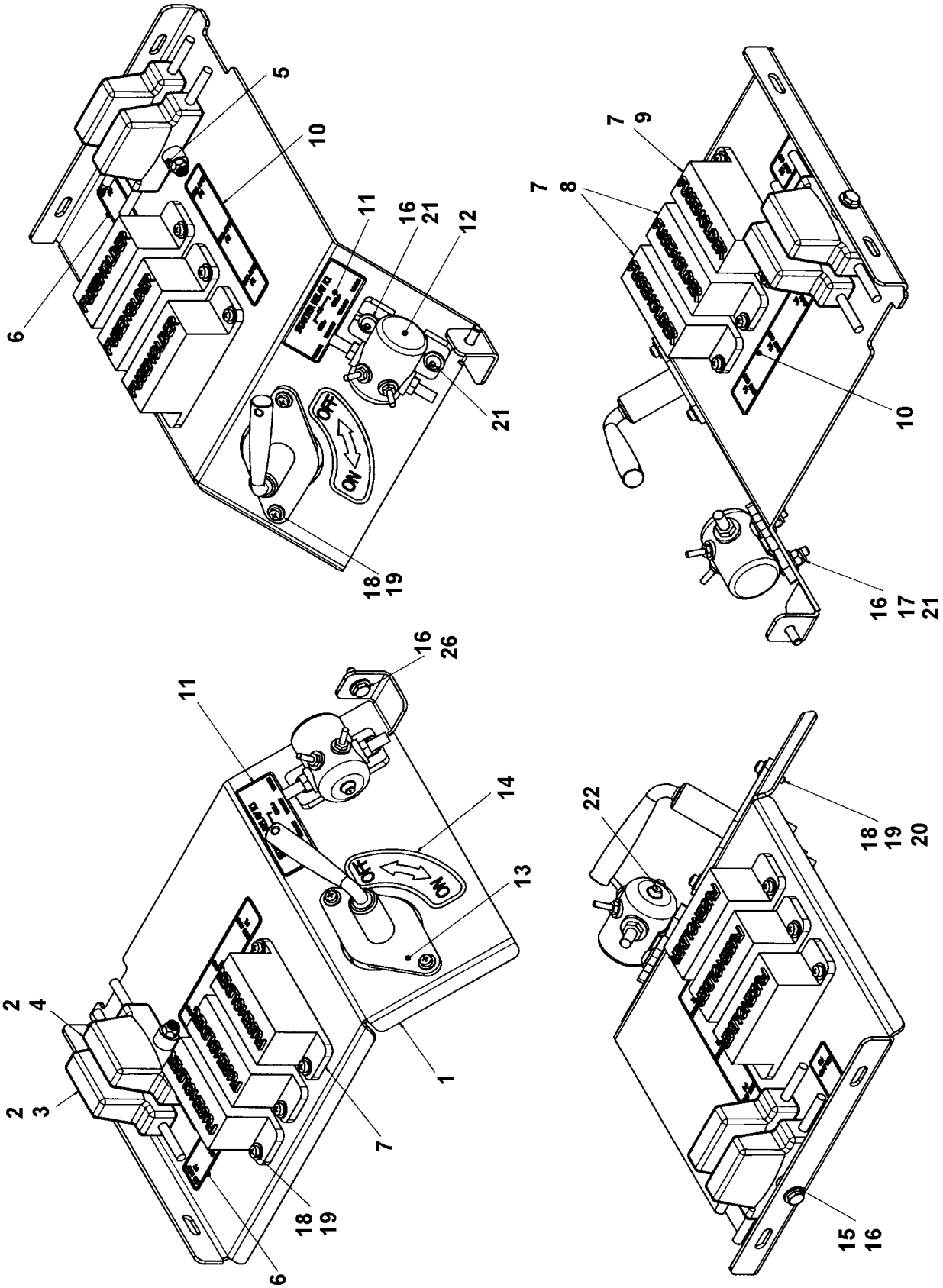

Item	Part No.	Name	Qty	L	SN INFO
1	4812220886	Support plate	1		
2	D717101018	Fuseholder, inline	2		
3	D717101045	Fuse, 30A	1		
4	D717101047	Fuse, 50A	1		
5	D717101044	Spacer, fuse holder	2		
6	D717410025	Decal, fuse holder	1		
7	D717101010	Fuseholder, battery box	3		
8	D717101046	Fuse, 100A	2		
9	D717101048	Fuse, 125A	1		
10	D717410024	Decal, fuse holder	1		
11	D717410026	Decal, starter relay	1		
12	D717101013	Relay starter solenoid	1		
13	D717101011	Switch, battery disconnect	1		
14	D717410014	Decal, battery disconnect	1		
15	D717801618	Screw, 1/4'	1		
16	D717801058	Narrow flat washer, 0.25'	6		
17	D717800785	Nyloc nut, 1/4'	3		
18	D717801240	Screw, M10	8		
19	D717801142	Washer, 10	16		
20	D717800897	Lock nut, M10	8		
21	D717801296	Screw, 1/4'	2		
22	D717101015	Diode	1		
26	D717800687	Screw, 1/4'	1		

4812246958 Assembly, operator console, LH 4812246958 Assembly, Operater Console LH

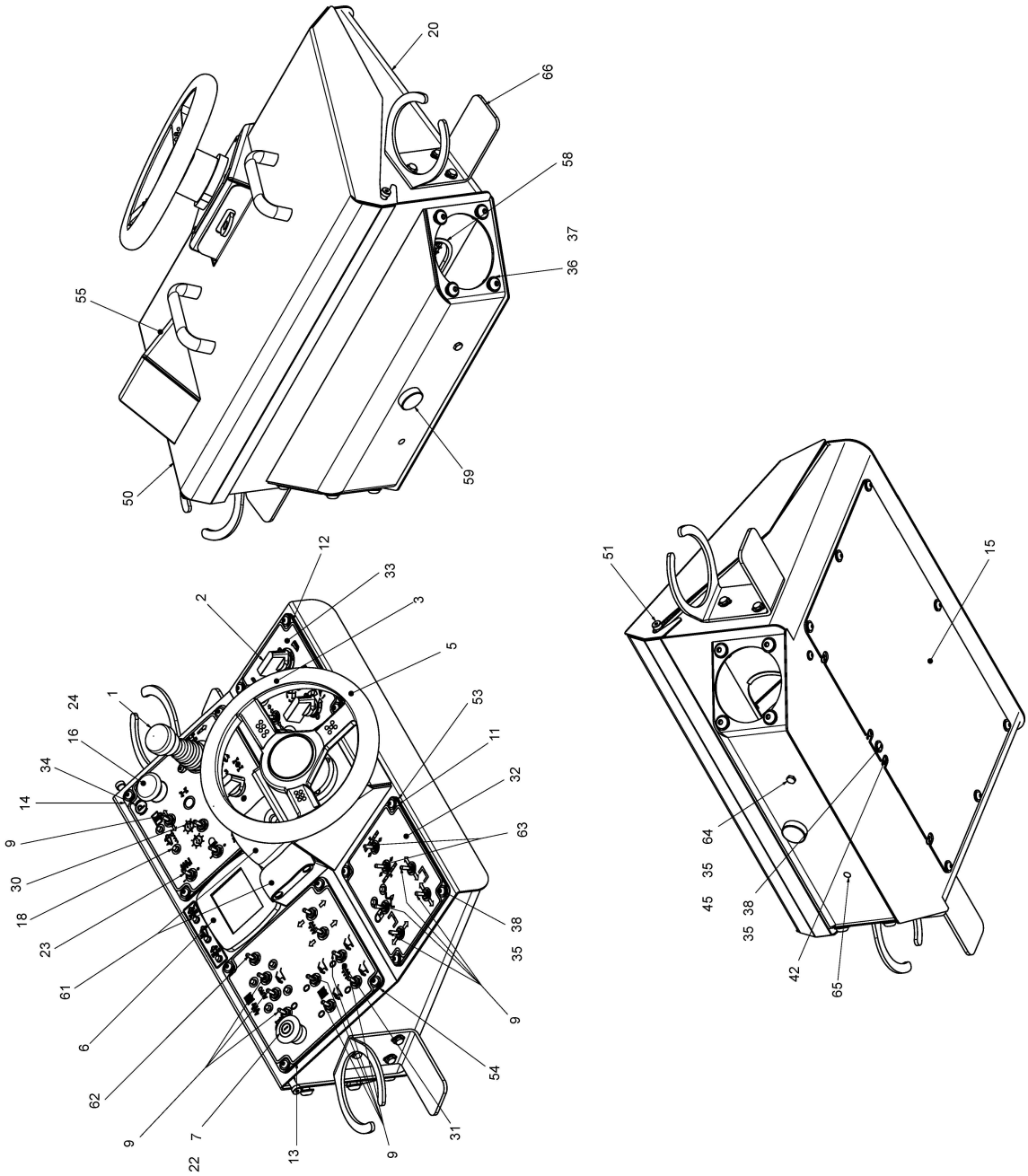

Item	Part No.	Name	Qty	L	SN INFO
1	D717101501	Controller, propel handle	1		
2	D717101502	Controller, speed dial	1		
3	D717101503	Controller, steering calibration	1		
4	D717101504	Switch, propel mode selection	1		
5	D717101505	Steering unit	1		
6	4812200422	Display, left	1		
7	D717103001	Push button e-stop	1		
8	D717103002	Switch, key ignition	1		
9	D717103003	Toggle switch, 7	16		
11		Plate, switch panel	1		
12	D717103006	Plate, switch panel	1		
13		Switch panel plate, upper left	1		
14	4812247258	Plate, switch panel upper right	1		
15	D717103009	Plate, access panel	1		
16	D717103010	Push button, parking brake	1		
17	D717103011	Push button, horn	1		
18	D717103013	LED, yellow	10		
19	D717103014	LED, green	2		
20	4812220900	Operator console	1		
22	D717103015	NC contact, block	1		
23	D717103018	Toggle switch, 3	1		
24	D717103016	NO contact	2		
26	D717113024	Cover, swing arm	1		
29	D717103022	Toggle switch, 3	1		
30	D717103021	Toggle switch, 1	1		
31	4812220905	Decal, left console upper left	1		
32	D717410007	Decal, left console, lower left	1		
33	D717410008	Decal, console lh, lower right	1		
34	4812247251	Decal concole LH, upper right	1		
35	D717801058	Narrow flat washer, 0.25'	35		
36	D717801044	Narrow washer, 0.38'	8		
37	D717801268	Screw, 3/8'	8		
38	D717801289	Screw, 1/4'	28		
39	D717103025	Barrier block	2		
40	D717801100	Washer, #6	8		
41	D717800876	Lock nut, M6	4		
42	D717800974	Screw, M6	4		

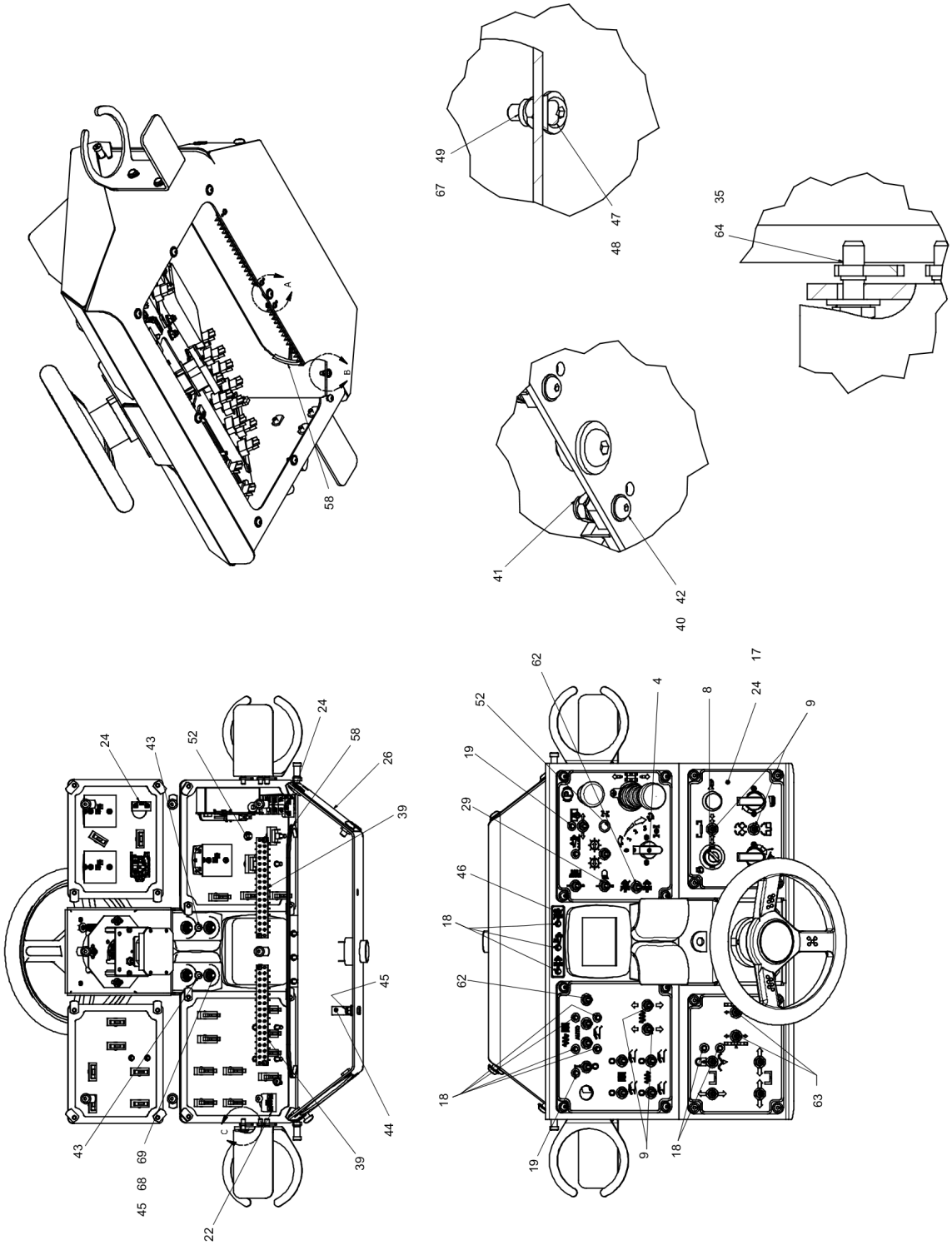
58
A
B
49
67
47
48
35
64
41
42
40
24
43
52
24
58
26
39
45
44
39
43
69
68
45
22
C
62
52
19
29
46
18
62
18
19
9
18
4
8
24
17
9
63

Item	Part No.	Name	Qty	L	SN INFO
43	D717103026	Rubber grommet, 5/16'	2		
44	D717801520	Cushioned clamp, 1.5'	1		
45	D717800785	Nyloc nut, 1/4'	5		
46	4812220907	Decal, engine controls	1		
47	D717801002	Hex nut, M10	1		
48	D717801142	Washer, 10	1		
49	D717800883	Lock nut, M10	1		
50	4812220702	Console cover	1		
51	D717103030	Shoulder bolt, 3/8'	2		
52	D717101043	Nylon hole plug, 7	1		
53	D717103032	Switch panel gasket, small	2		
54	D717103033	Switch panel gasket, large	2		
55	4812220958	Operator console handle	2		
56		Wiring diagram left console TI	1		
57		Harness diagram, left console	1		
58	D717103029	Edge protector	1		
59	D717103035	Alarm, electric	1		
60	D717103036	Toggle switch boot	19		
61	4812222214	Operator console light dashboard	2		
62	4812222171	Operator console toggle switch, 5E	2		
63	4812222241	Operator console toggle switch, 7E	2		
64	D717800687	Screw, 1/4'	7		
65	4812222172	Nylon hole plug	1		
66	4812222186	Cup holder	2		
67	4812222206	Lock washer, 10	1		
68	D717801261	Screw, 1/4'	4		
69	D717801184	Washer, 1/4'	4		

D717101501 Controller, propel handle D717101501 Controller, propel handle

NO DRAWING AVAILABLE FOR THIS BOM

Item	Part No.	Name	Qty	L	SN INFO
1	4812270342	Maintained center	1		
2	4812270349	Microswitch	1		

D717101501 Controller, propel handle 4812270342 Maintained center

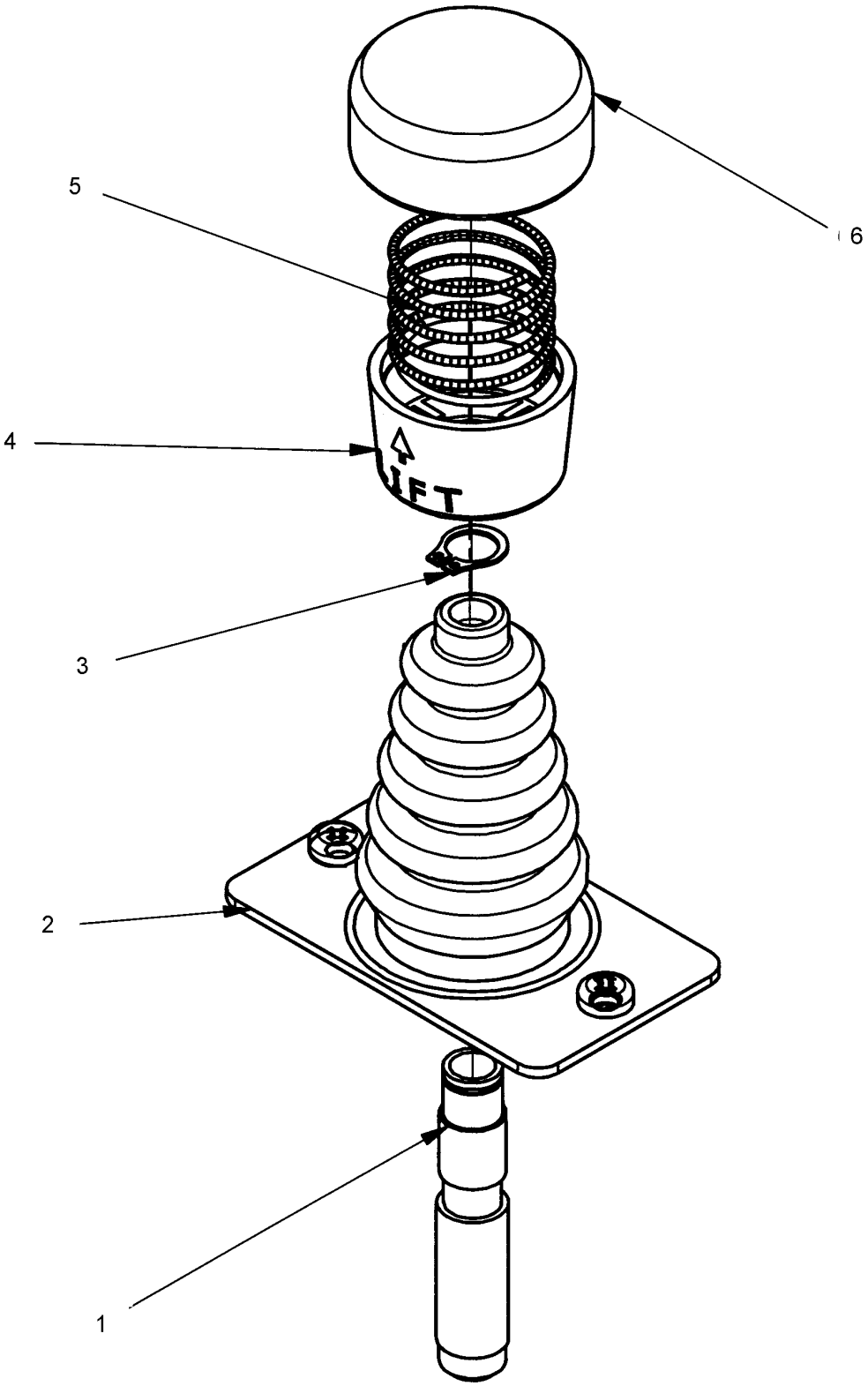

Item	Part No.	Name	Qty	L	SN INFO
1	4812270345	Tube	1		
2	4812270346	Boot	1		
3	4812270348	Clip ring	1		
4	4812270347	Handle, lower half	1		
5	4812270343	Spring	1		
6	4812270344	Handle, upper half	1		

4812246959 Assembly, operator console, RH 4812246959 Assembly Operater Console RH

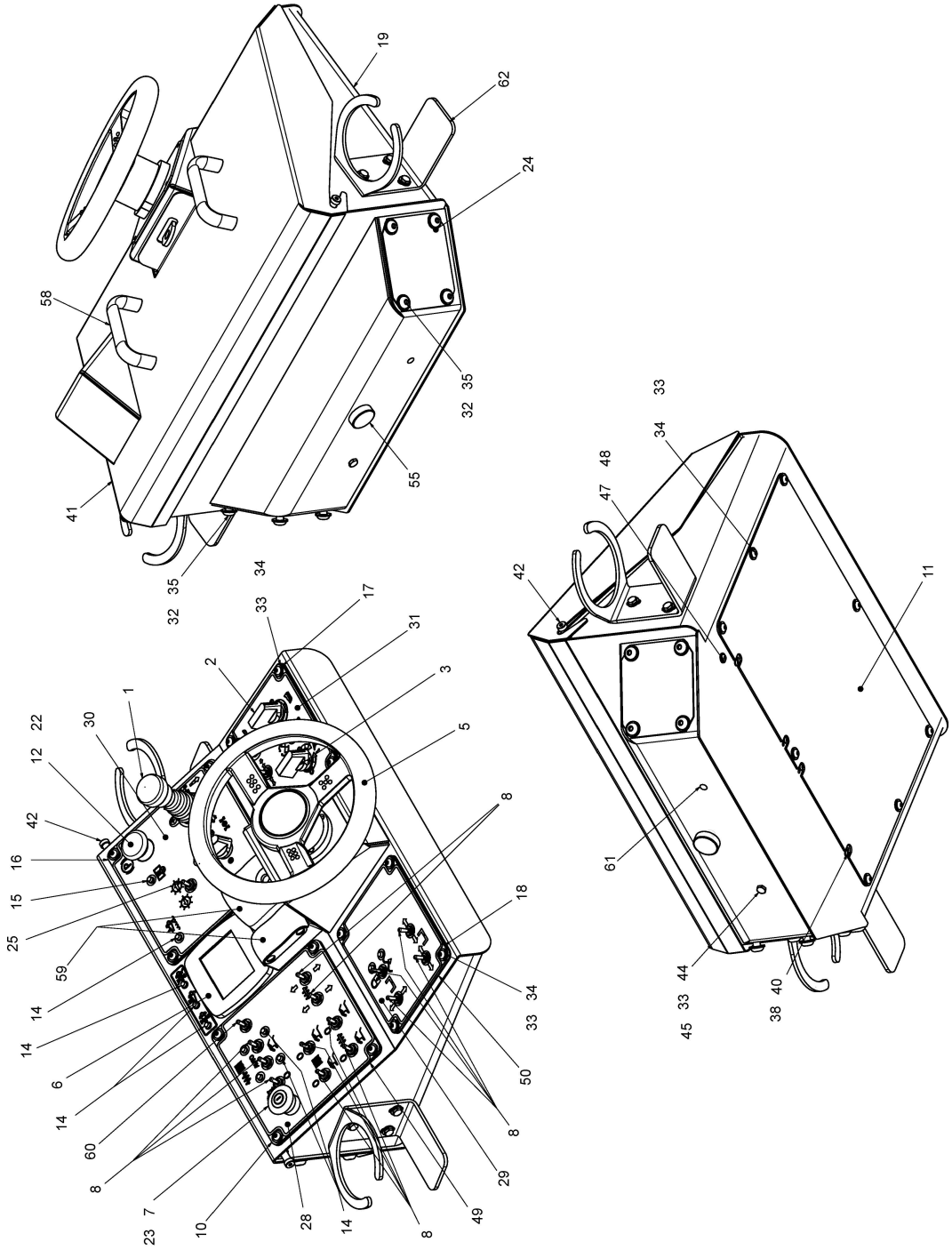

Item	Part No.	Name	Qty	L	SN INFO
1	D717101501	Controller, propel handle	1		
2	D717101502	Controller, speed dial	1		
3	D717101503	Controller, steering calibration	1		
4	D717101504	Switch, propel mode selection	1		
5	D717101505	Steering unit	1		
6	4812200423	Display, right	1		
7	D717103001	Push button e-stop	1		
8	D717103003	Toggle switch, 7	15		
10		Switch panel plate, upper left	1		
11	D717103009	Plate, access panel	1		
12	D717103010	Push button, parking brake	1		
13	D717103011	Push button, horn	1		
14	D717103013	LED, yellow	10		
15	D717103014	LED, green	2		
16	4812247257	Plate switch panel RH, upper right	1		
17	D717103502	Plate, switch panel	1		
18	D717103503	Plate, access panel	1		
19	4812220900	Operator console	1		
21	4812220907	Decal, engine controls	1		
22	D717103016	NO contact	2		
23	D717103015	NC contact, block	1		
24	D717113024	Cover, swing arm	1		
25	D717103021	Toggle switch, 1	1		
28	4812220905	Decal, left console upper left	1		
29	D717410010	Decal, right console, lower left	1		
30	4812247253	Decal console RH, upper right	1		
31	D717410012	Decal, console rh, lower right	1		
32	D717801044	Narrow washer, 0.38'	8		
33	D717801058	Narrow flat washer, 0.25'	35		
34	D717801289	Screw, 1/4'	28		
35	D717801268	Screw, 3/8'	8		
36	D717103026	Rubber grommet, 5/16'	2		
37	D717103025	Barrier block	2		
38	D717801100	Washer, #6	8		
39	D717800876	Lock nut, M6	4		
40	D717800974	Screw, M6	4		
41	4812220702	Console cover	1		

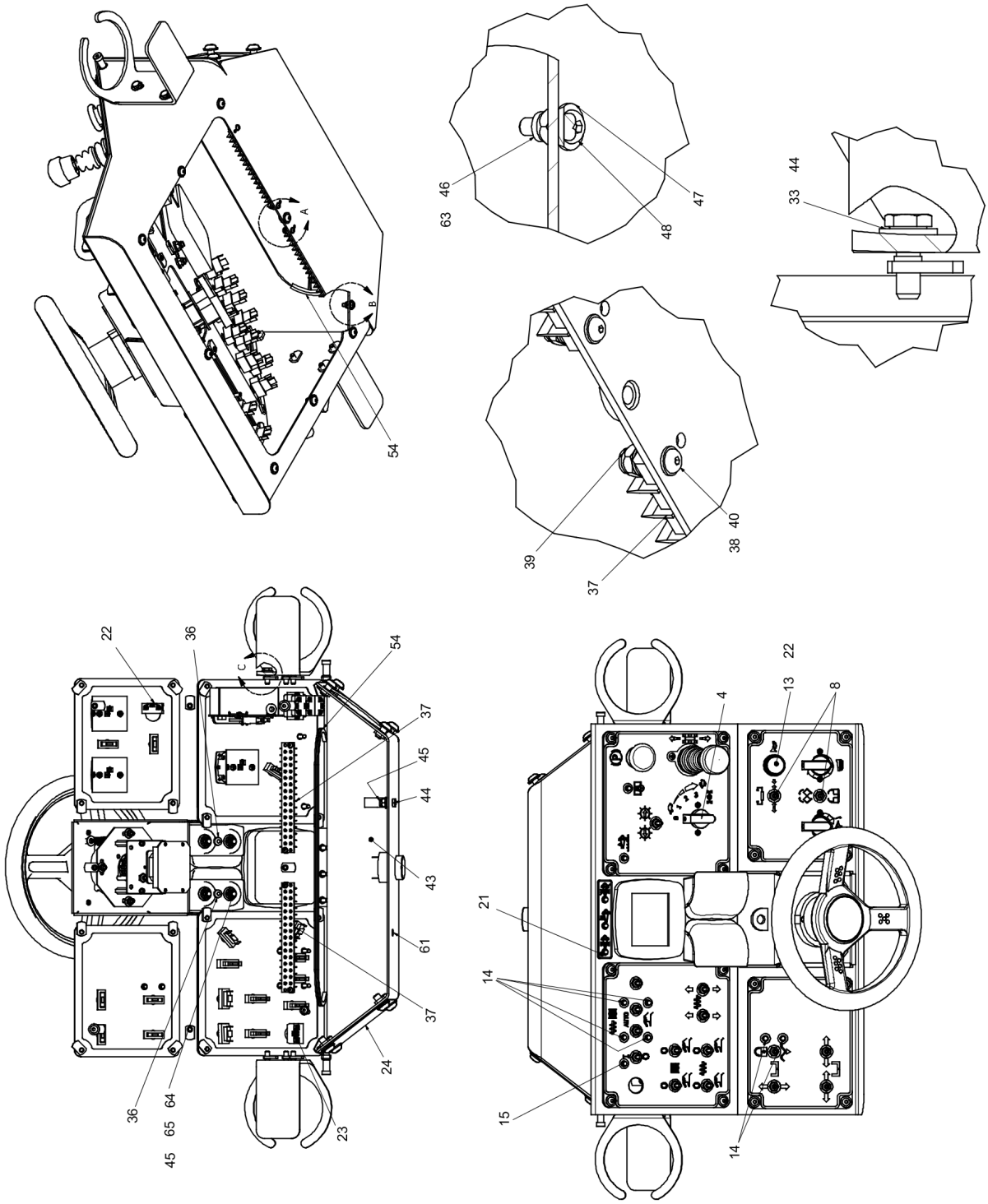
54
A
B
46
63
47
48
44
33
39
37
40
38
22
36
C
54
37
45
44
43
61
37
24
36
64
65
45
23
21
14
15
4
13
22
8
14

Item	Part No.	Name	Qty	L	SN INFO
42	D717103030	Shoulder bolt, 3/8'	2		
43	D717801520	Cushioned clamp, 1.5'	1		
44	D717800687	Screw, 1/4'	7		
45	D717800785	Nyloc nut, 1/4'	5		
46	D717800883	Lock nut, M10	1		
47	D717801142	Washer, 10	1		
48	D717801002	Hex nut, M10	1		
49	D717103033	Switch panel gasket, large	2		
50	D717103032	Switch panel gasket, small	2		
52		Wiring diagram	1		
53		Harness	1		
54	D717103029	Edge protector	1		
55	D717103035	Alarm, electric	1		
56	D717103036	Toggle switch boot	17		
58	4812220958	Operator console handle	2		
59	4812222214	Operator console light dashboard	2		
60	4812222171	Operator console toggle switch, 5E	1		
61	4812222172	Nylon hole plug	1		
62	4812222186	Cup holder	2		
63	4812222206	Lock washer, 10	1		
64	D717801261	Screw, 1/4'	4		
65	D717801184	Washer, 1/4'	4		

Electrical system, assembly D717104500 Assembly, AC main panel

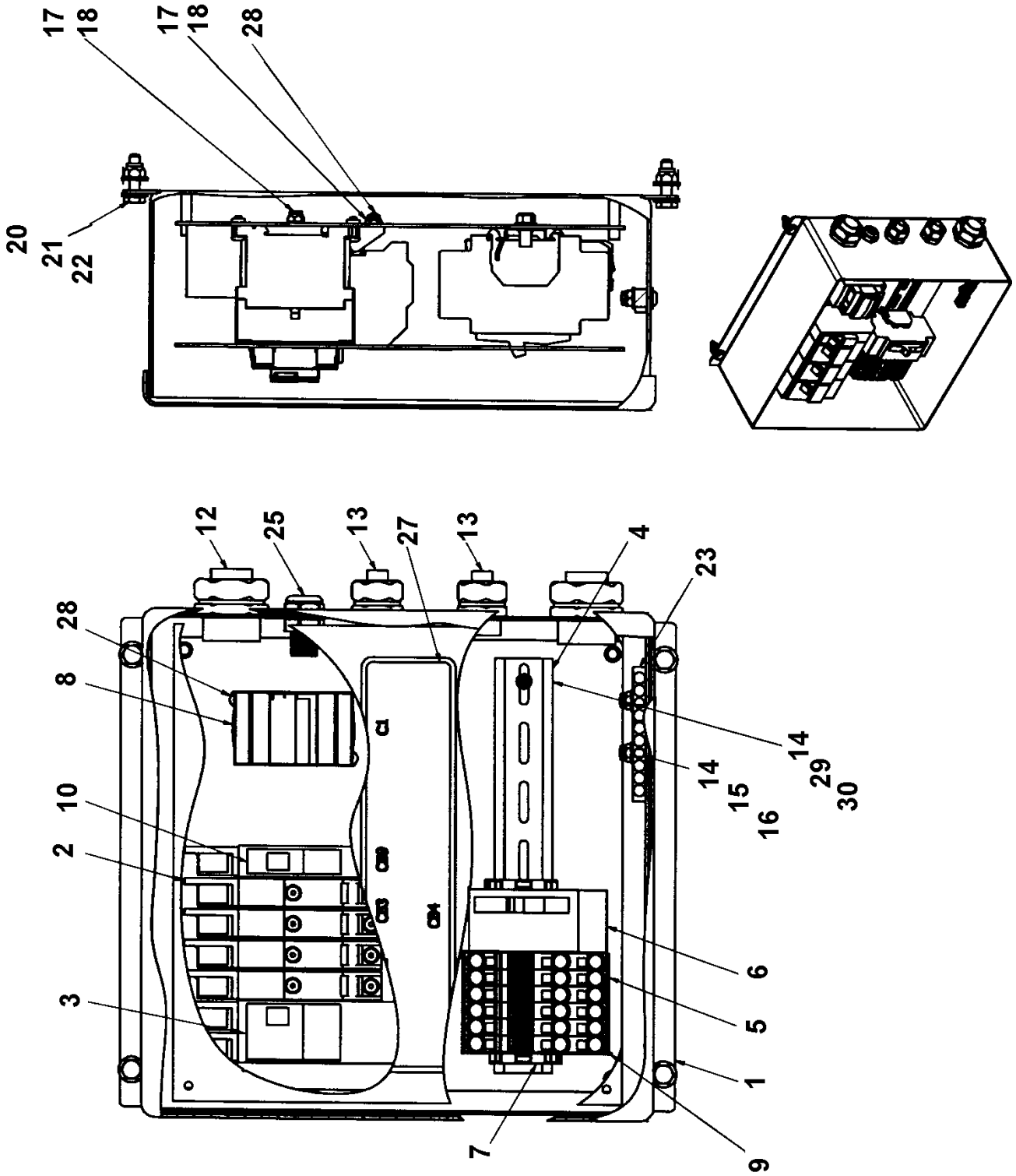

Item	Part No.	Name	Qty	L	SN INFO
1		Box	1		
2	D717104505	Pad, mounting GFCI circuit breacker	7		
3	D717104503	Breaker main	3		
4	D717905006	Din rail	1		
5	D717104508	Terminal block, 3-wire	6		
6	D717104504	Circuit breaker	1		
7	D717104017	End stop, terminal block	2		
8	D717104507	Contactor, 18A	1		
9	D717104509	End cover, terminal block	1		
10	D717104511	Breaker main, 15A	1		
12	D717104515	Fitting straight, 1'	2		
13	D717104516	Fitting straight, 1/2'	2		
14	D717801142	Washer, 10	6		
15	D717800883	Lock nut, M10	2		
16	D717801009	Hex nut, M10	2		
17	D717801093	Washer, 0.164'	28		
18	D717800869	Lock nut, M8	14		
20	D717801058	Narrow flat washer, 0.25'	8		
21	D717800785	Nyloc nut, 1/4'	4		
22	D717800680	Screw, 1/4'	4		
23	D717104517	Bar, solid neutral	1		
25	D717104519	Cord grip	1		
26		Wiring diagram, AC main panel	1		
27	D717410029	Decal, AC main panel	1		
28	D717800953	Screw, M8	16		
29	4812222578	Hex screw	2		
30	4812222579	Hex lock nut	2		
33	D717104522	Harness, AC main panel to fume extractor	1		
34	D717104520	Harness, generator to AC panel	1		

Electrical system, assembly Lighting system Tier IV

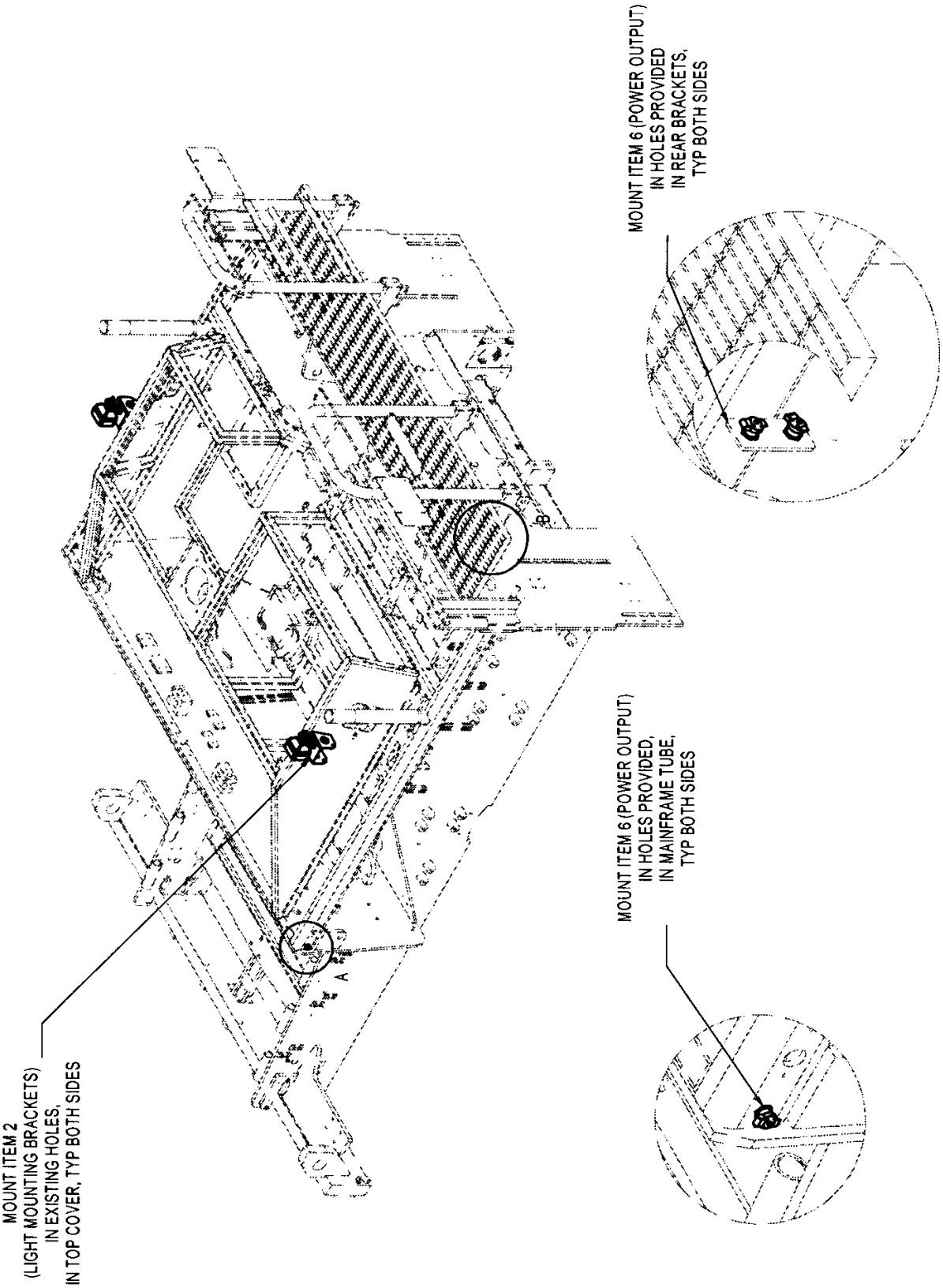

Item	Part No.	Name	Qty	L	SN INFO
1	D717105505	Grommet	2		
2	4812223624	Bracket, front light	2		
3	D717105503	Light 24V, work system	4		
4	D717105504	Grommet	2		
6	D717105507	Power outlet	6		
7	4812223625	Bracket	2		
11	0301234400	Washer plain	12		
12	0291118549	Hexagon nut	6		
13	4812223295	Hexagon bolt	6		
14	4812223957	Clip, Grating tie down	4		
15	D939776113	Washer	8		
16	0147132712	Screw DIN933	4		
17	0291111000	Nut DIN985	4		

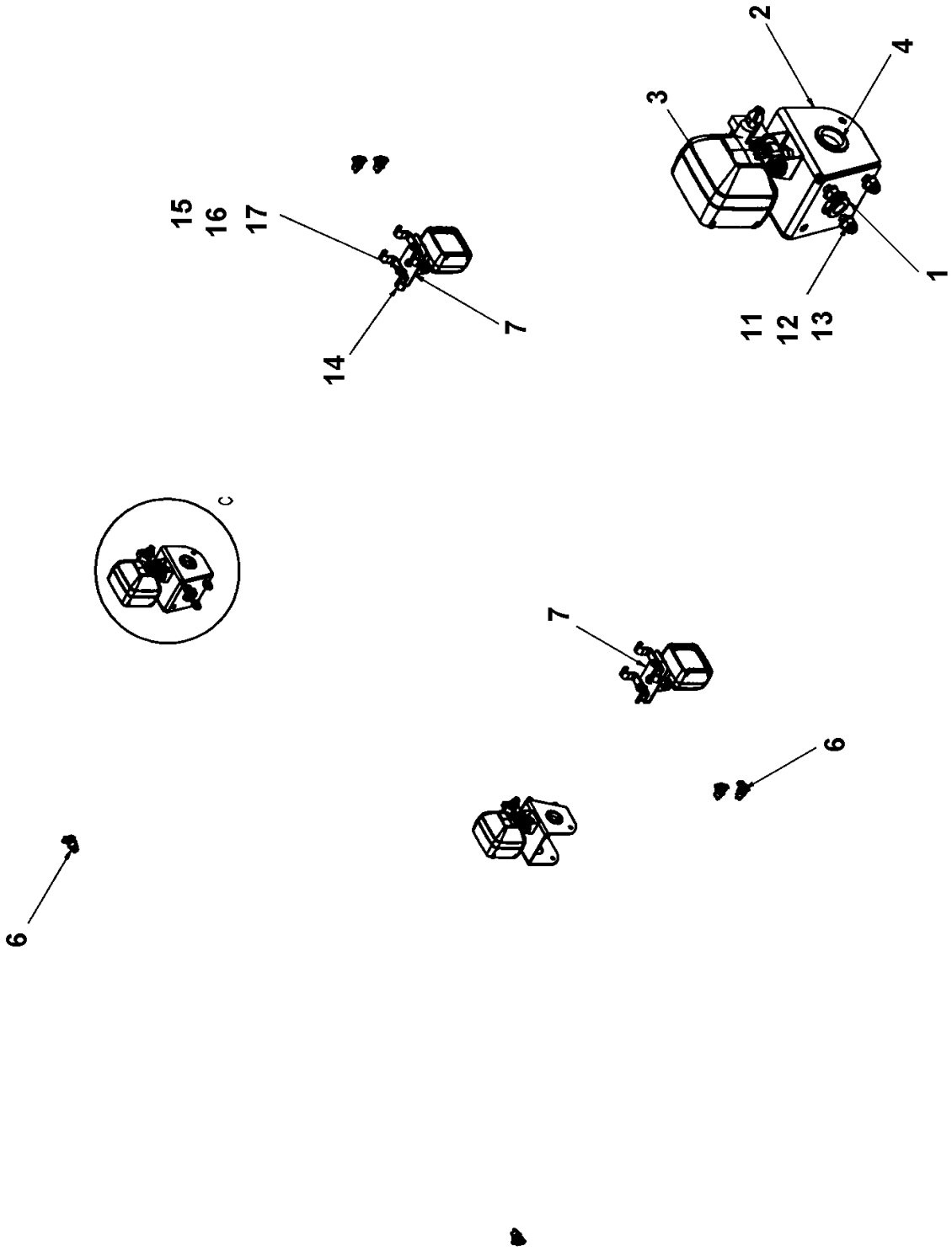
6
C
15
16
17
14
7
7
3
2
4
1
11
12
13
6

This page intentionally left blank

Electrical system, assembly Auger & conveyor controls

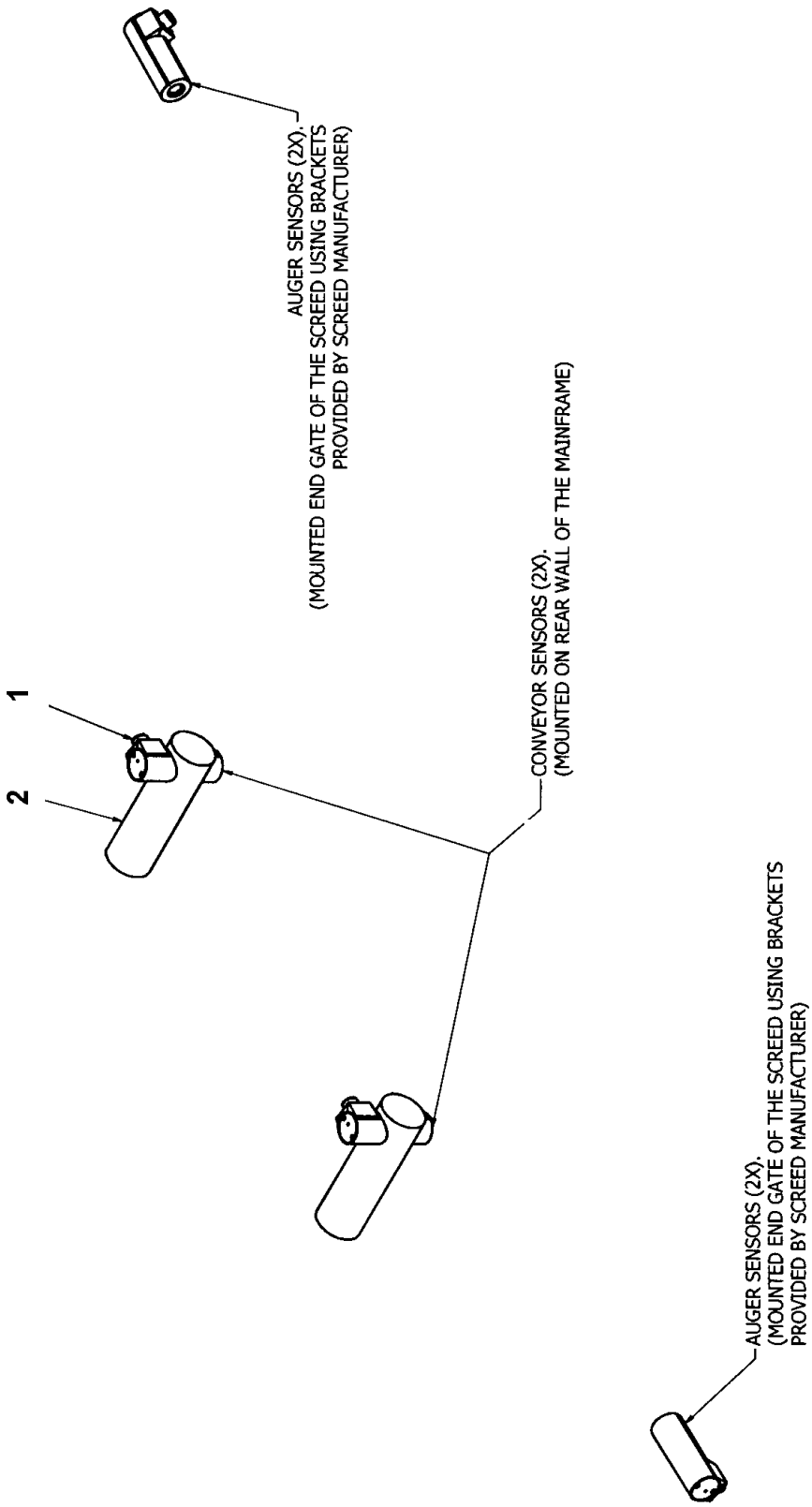

Item	Part No.	Name	Qty	L	SN INFO
1	D717102002	Sonic pwm sensor, feed system	4		
2	D717102005	Bracket, sonic sensor	2		

Electric system D717906000 Roading lights assembly

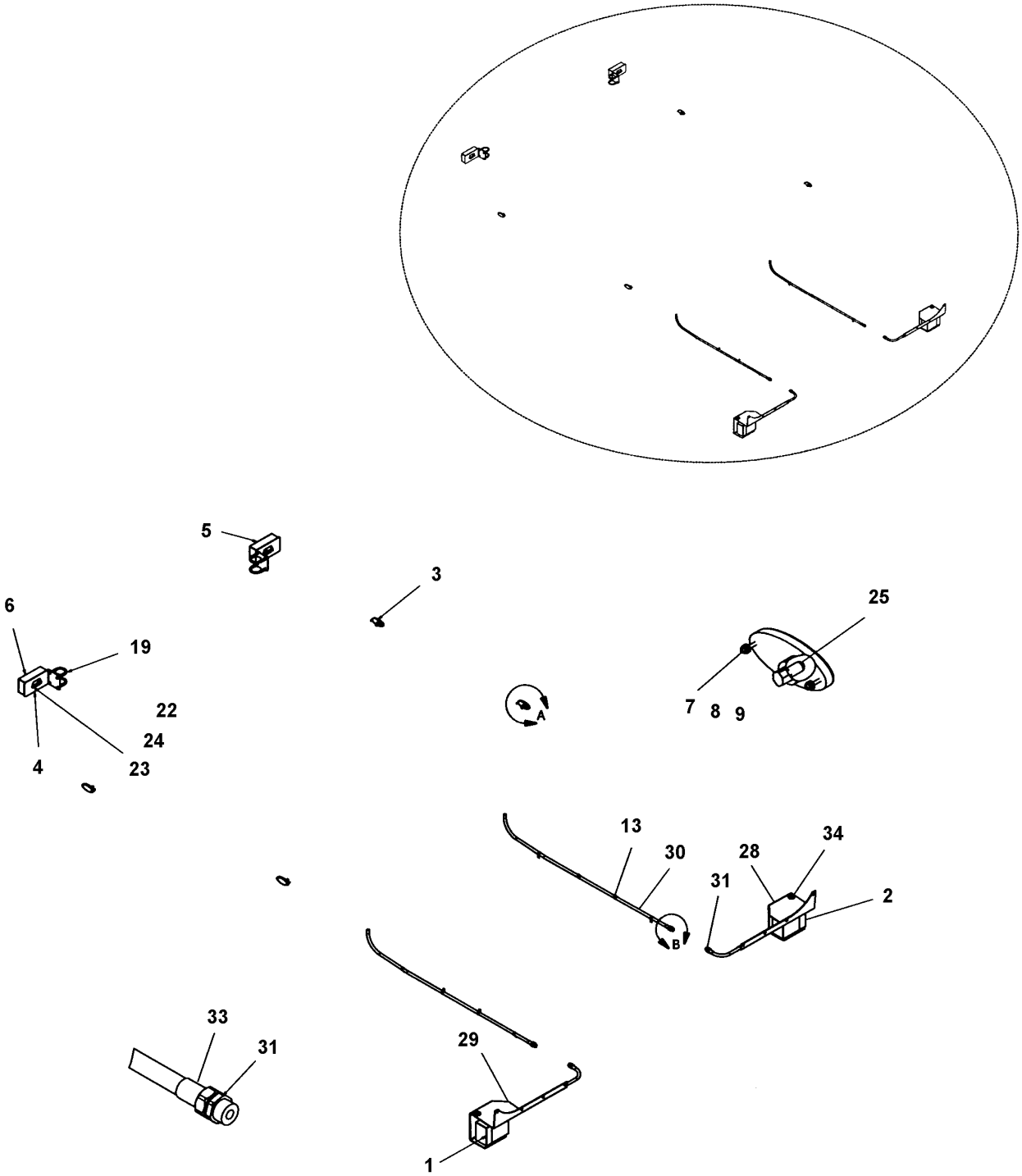

Item	Part No.	Name	Qty	L	SN INFO
1	D717906005	Head light, right side	1		
2	D717906004	Head light, left side	1		
3	D717906003	Light, side amber	4		
4	D717906009	Bracket, tail lights	2		
5	D717906001	Light, tail left side	1		
6	D717906002	Light, tail right side	1		
7	D717801380	Screw, M6	8		
8	D717801100	Washer, #6	8		
9	D717800876	Lock nut, M6	8		
13	4700921104	Pipe clamp	8		
19	D717906014	U-bolt, 3/8'	4		
20	D717101516	Harness, rh front headlight	1		
21	D717101517	Harness, lh front headlight	1		
22	D717906015	Plate	2		
23	D717800680	Screw, 1/4'	4		
24	D717801058	Narrow flat washer, 0.25'	4		
25	D717906006	Bulb, amber	4		
28	4812200311	Roading lights weldment, left	1		
29	4812200312	Roading lights weldment, right	1		
30	4812200313	Conduit, 1/2'	2		
31	D717104516	Fitting straight, 1/2'	4		
32	4812200314	Harness, roading lights	2		
33	4812200315	Conduit, 1/2'	4		
34	D717101019	Grommet	2		

Accessories Accessories

NO DRAWING
AVAILABLE
FOR THIS BOM

Item	Part No.	Name	Qty	L	SN INFO
1	4700348331	Seat protector	1		
2	4812243639	Manual kit	1		
3	4812222082	Key replacement kit	1		
4	D717955090	Uptime kit	1		
5	D717906000	Roading lights	1		
6	4812222836	Beacon assembly	1		
7	4812224333	Wash down, assembly	1		
8	D717905000	Auxiliary power panel	1		
9	4812224504	Kit, screed, disconnect	1		
10	4812223939	Push roller crosshead	1		

Accessories Beacon assembly

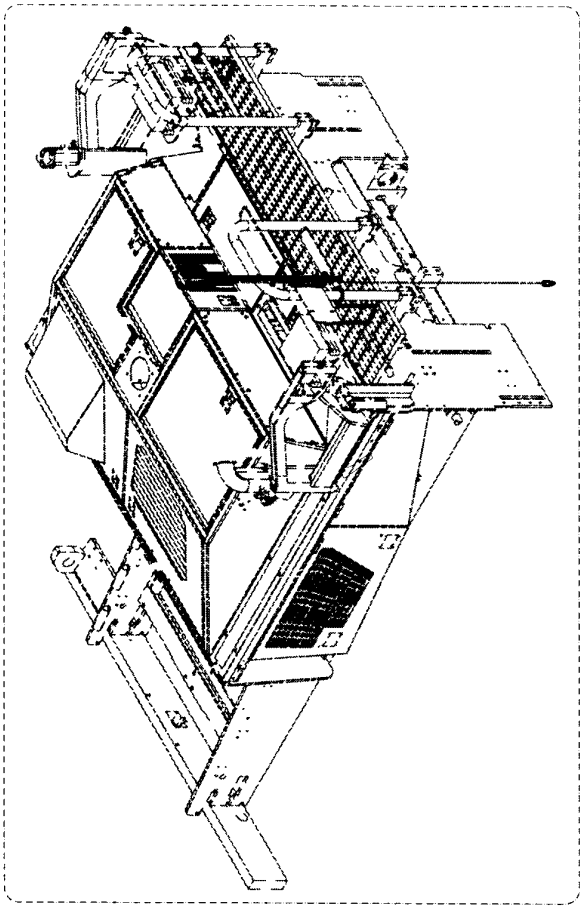

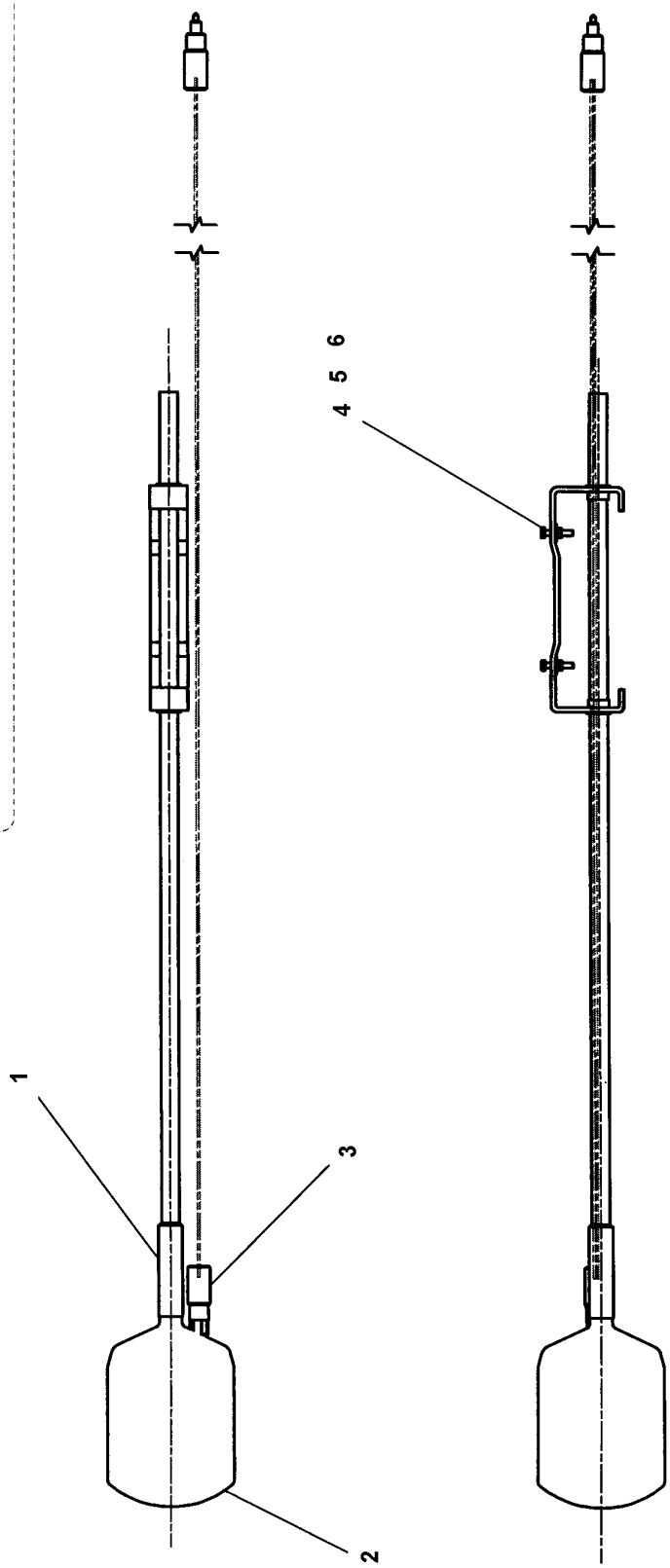

Item	Part No.	Name	Qty	L	SN INFO
1	D717906503	Pole mount, warning beacon	1		
2	D717906501	Rotating beacon	1		
3	D717906505	Harness	1		
4	5730015168	Hexagon head screw	2		
5	D939570011	Washer	2		
6	5730015118	Hexagon nut	2		

Accessories 4812224333 Wash down, assembly

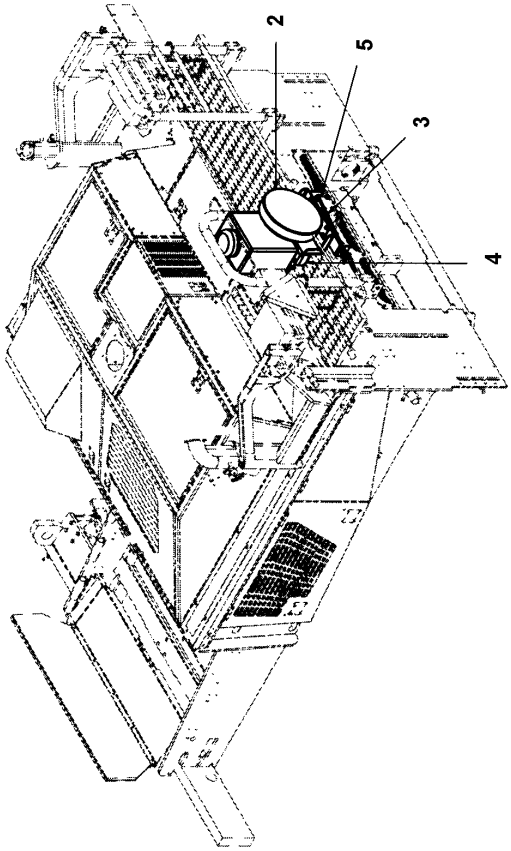

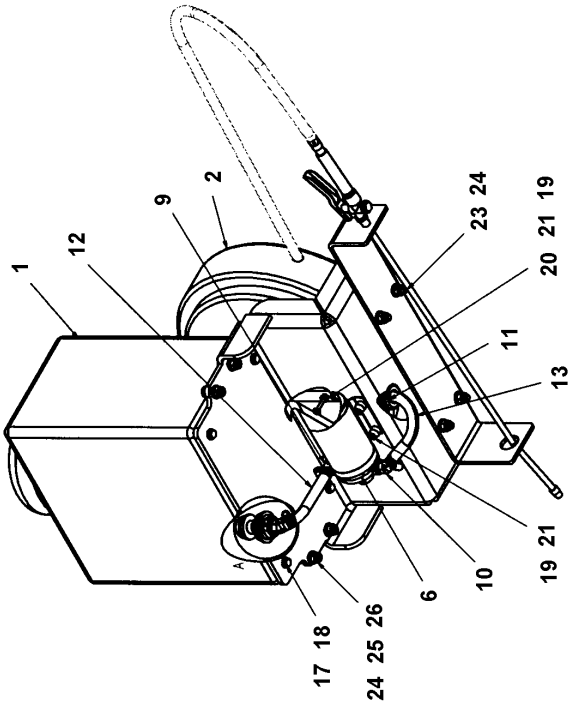

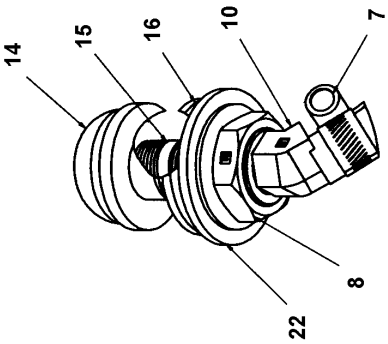

Item	Part No.	Name	Qty	L	SN INFO
1	D717909501	Tank	1		
2	D717909505	Hose reel	1		
3	D717909503	Spray wand	1		
4	4812224334	Mounting bracket	1		
5	4812224335	Mount, wash down spray wand	1		
6	D717909502	Pump	1		
7	D717909516	Clamp, worm drive	4		
8	D717909517	Coupling, anchor	1		
9	D717909518	Hose barb	2		
10	D717909519	Beaded hose barb	2		
11	D717909507	Grommet, rubber 1.25 DIA	1		
12	D717909508	Wash down suction hose	1		
01	4700904984	Fuel hose	1		
13	D717909509	Hose, pump to hose reel	1		
01	4700904984	Fuel hose	1		
14	D717909511	Strainer, suction	1		
15	D717909521	Nipple, 3/8'	1		
16	D717909520	Washer, seal	1		
17	D717801051	Narrow washer, 0.313'	4		
18	D717800568	Screw, 5/16'	4		
19	D717801142	Washer, 10	8		
20	D717800897	Lock nut, M10	4		
21	D717801247	Screw, M10	4		
22	D717801065	Washer, 1'	1		
23	0147196264	Hex. head screw	4		
24	D939776115	Washer	16		
25	4812223295	Hexagon bolt	4		
26	0291118549	Hexagon nut	8		

Accessories D717905000 Auxiliary power panel

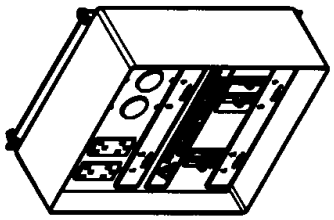

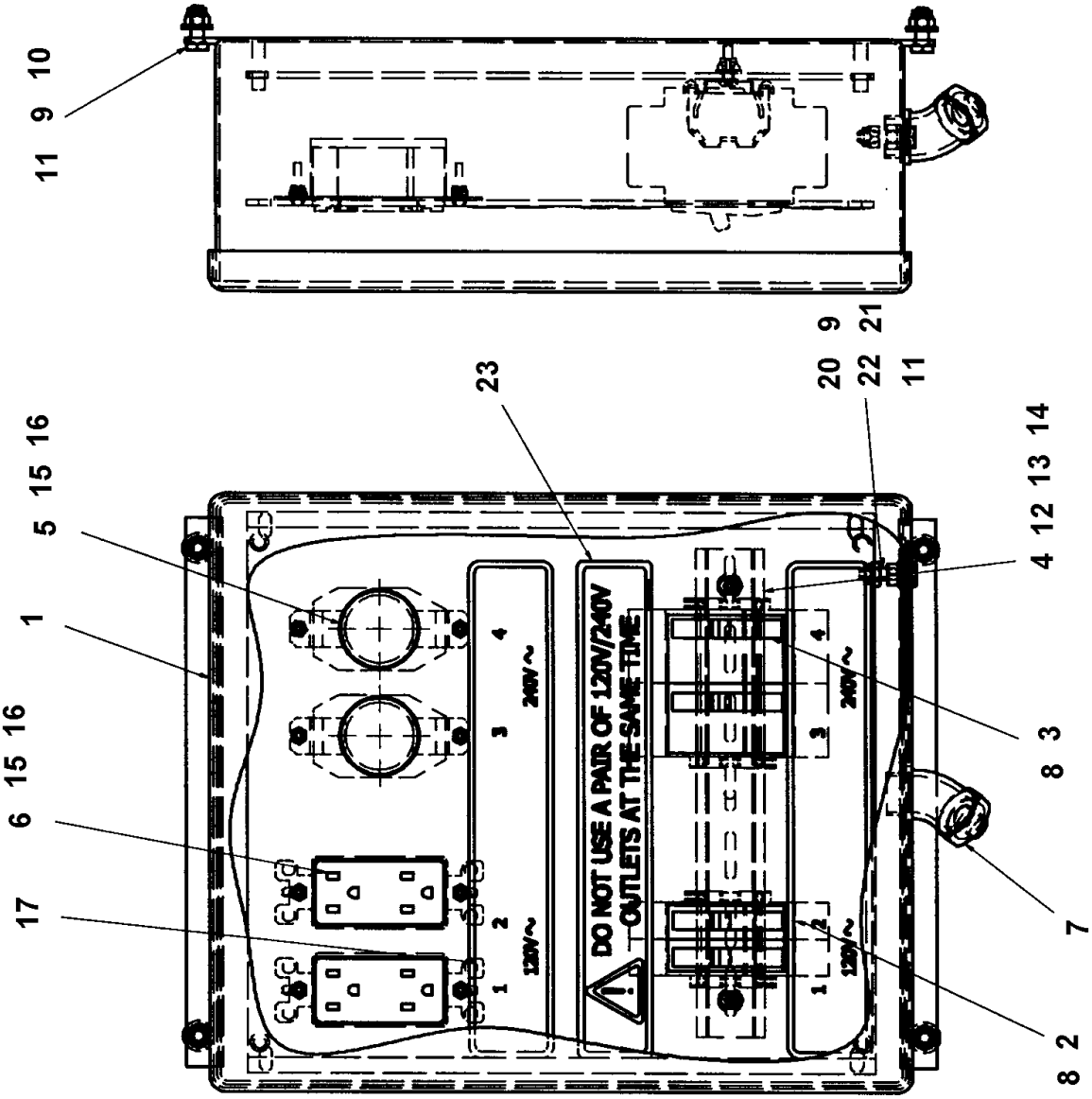

Item	Part No.	Name	Qty	L	SN INFO
1		Nema box	1		
2		Circuit breaker, 1 pole	2		
3		Circuit breaker, 2 pole	2		
4	D717905006	Din rail	1		
5		Receptacle	2		
6		Receptacle	2		
7		Elbow, 1/2'	1		
8	D717104017	End stop, terminal block	4		
9	D717801058	Narrow flat washer, 0.25'	5		
10	D717800687	Screw, 1/4'	4		
11	D717800785	Nyloc nut, 1/4'	5		
12		Hex nut, M10	2		
13	D717801142	Washer, 10	2		
14	D717800883	Lock nut, M10	2		
15	D717801100	Washer, #6	8		
16	D717800876	Lock nut, M6	8		
17		Decal, auxiliary power panel	2		
18		Wiring diagram, AC aux panel	1		
19		Harness, AC main panel to aux panel	1		
20	D717800680	Screw, 1/4'	1		
21		Hex nut, 1/4'	1		
22	D717801513	Washer, 1/4'	1		
23		Decal, warning	1		

4812223939 Push roller crosshead 4812223939 Push roller crosshead

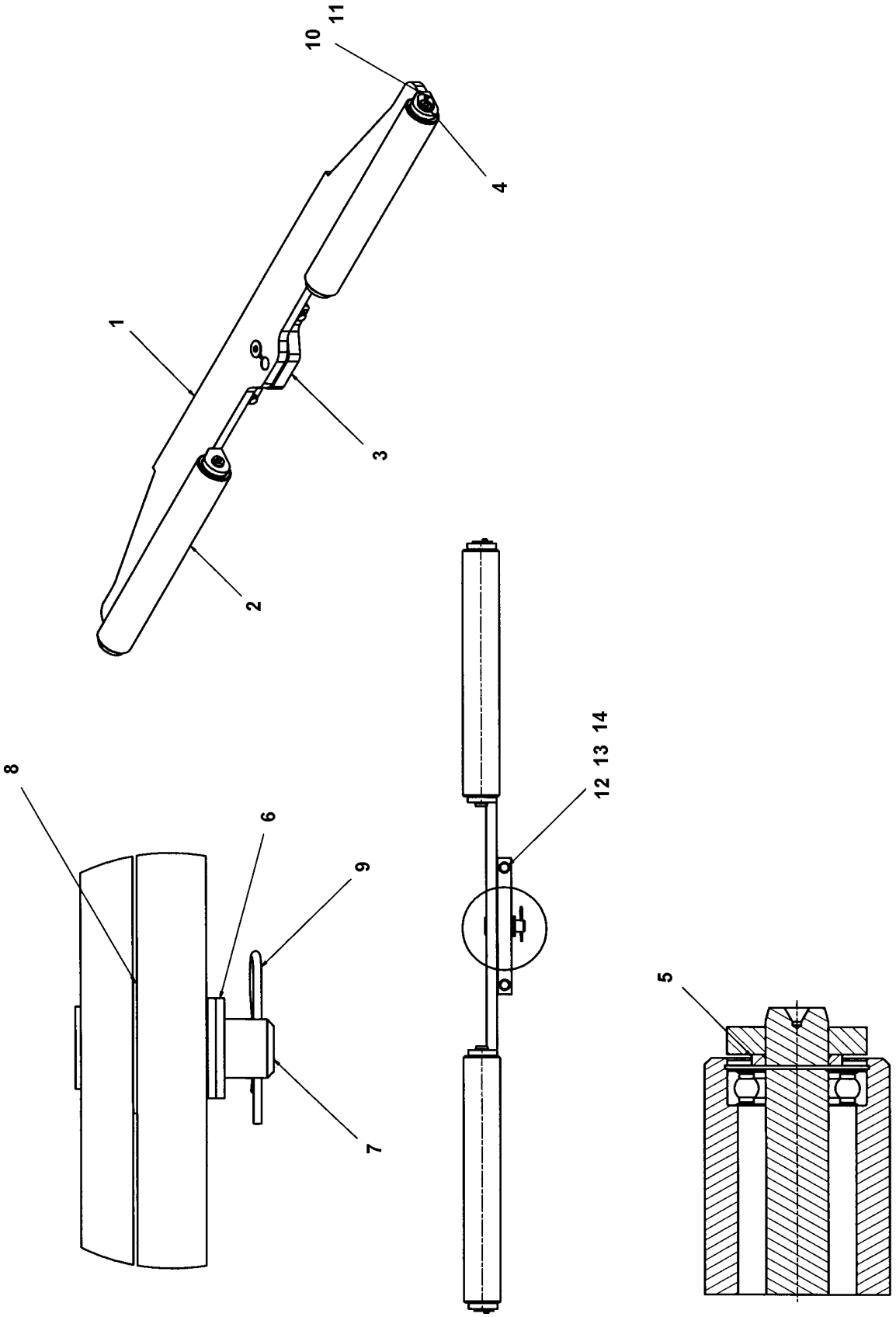

Item	Part No.	Name	Qty	L	SN INFO
1	4812223940	Crosshead	1		
2	4812223943	Roller assembly	2		
3	4812223952	Push roller plate	1		
4	4812223946	Bearing bolt	2		
5	4812223954	Ring, spacer	4		
6	4812223951	Washer, pin	2		
7	4812223949	Pin	1		
8	4812223953	Push roller washer	1		
9	D930205010	Spring pin	1		
10	0147132503	Hex head screw	2		
11	D939776113	Washer	2		
12	4812223968	Bolt	2		
13	D939776129	Locking washer	4		
14	5540164900	Hexagon nut	2		

4812223939 Push roller crosshead 4812223943 Roller assembly

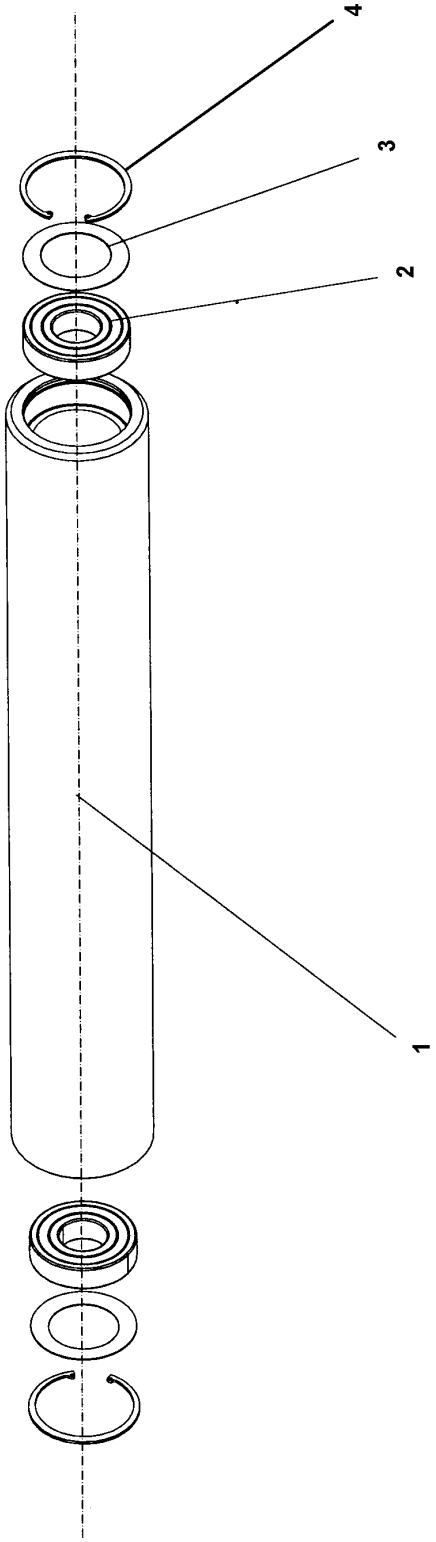

Item	Part No.	Name	Qty	L	SN INFO
1	4812223944	Roller	1		
2	D717011014	Bearing, push roller	2		
3	D717011016	Disc spring	2		
4	4812240180	Circlip	2		

Accessories Decal installation

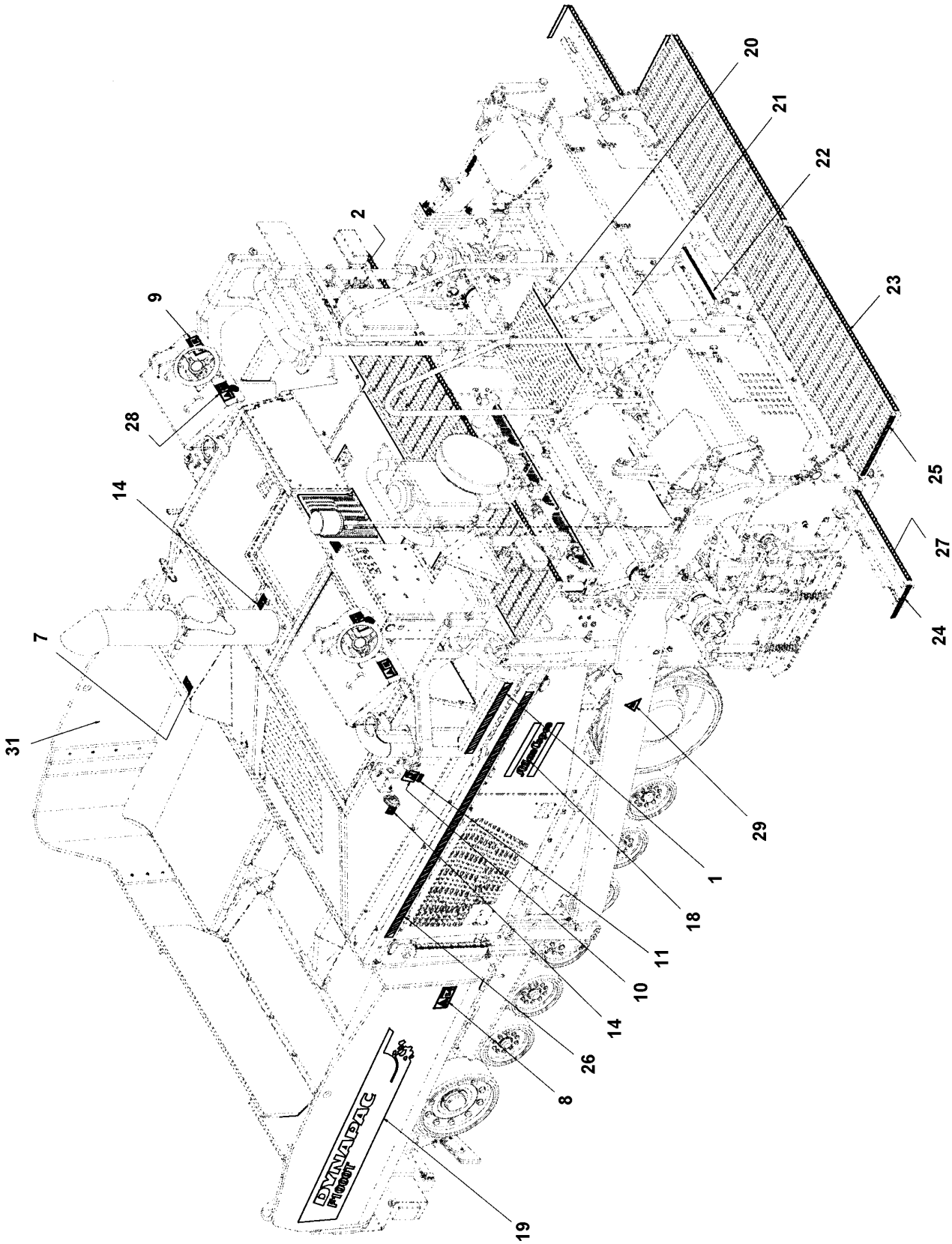

Item	Part No.	Name	Qty	L	SN INFO
1	D717410003	Tape, refl., op. station bot. tubes	2		
2	D717410005	Tape, refl., back of walkway	2		
3	D717410004	Tape, refl., hop. flsh'g bolt'g plates	2		
4	D717410023	Scale	2		
5	D717410027	Decal, right rear sensor plugs	1		
6	D717410028	Decal, left rear sensor plugs	1		
7	4700903423	Safety label, Rotating engine components	1		
8	D956044900	Warning sign: Danger of violent pressure	2		
9	4700903459	Decal "SAFETY"	2		
10	4700991658	Decal "FUEL"	2		
11	4811000344	Decal, low sulfur	2		
12	4700382751	Decal "SECURING POINT/TIE DOWN"	6		
13	4700357587	Label lifting point	4		
14	4700903424	Safety label, hot surfaces	2		
15	4700904835	Decal "BATTERY POWER"	1		
16	4812112874	Name plate with Atlas Copco logo	1		
17	4700281898	Label, use ear protectors	2		
18	4812243597	Decal, F1000T AC	2		
19	4812243558	Decal, Dynapac F1000T LH	1		
20	4812220077	Reflector strip	1		
21	4812220078	Reflector strip	1		
22	4812220079	Reflector strip	1		
23	4812220080	Reflector strip	2		
24	4812220082	Reflector strip	2		
25	4812220095	Reflector strip	2		
26	D717410002	Tape, refl., frame channels	2		
27	4812220081	Reflector strip	2		
28	4812220092	Decal, seat belt	2		
29	4812220093	Decal, hand crush	2		
30	4812220097	Decal, hight voltage	1		
31	4812243594	Decal, Dynapac F1000T RH	1		
32	4812243934	Decal, F1000T IV lub	1		
33	4812247711	Antifreezing solusion	1		
34	4812241304	Decal of hydraulic oil	1		
35	4812247625	F1000 screed hose connect decal	1		
36	4812249319	Decal, delivery guide	1		
37	4812249320	Decal, LH console instruction	1		

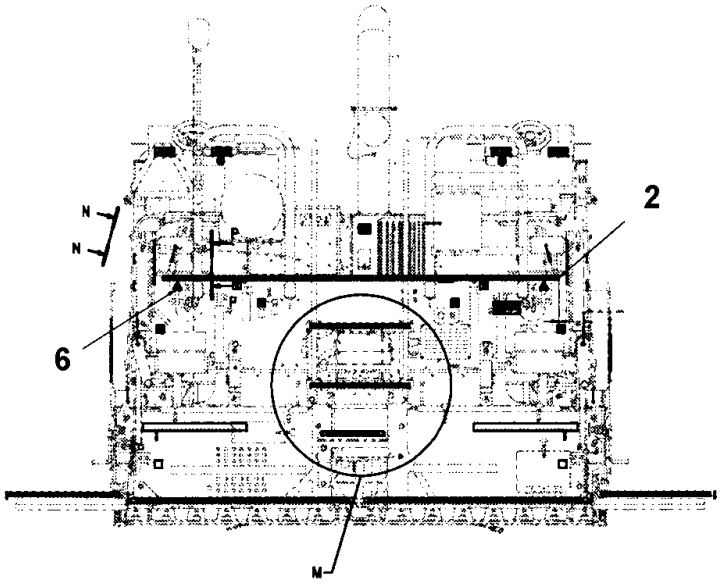
N
N
2
6
M

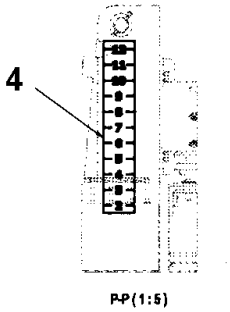
4
P-P(1:5)

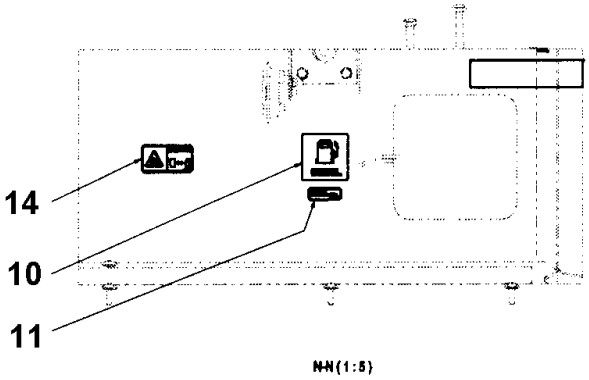
14
10
11
N-N(1:5)

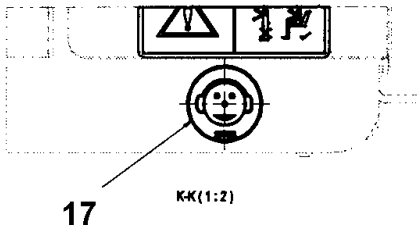
17
K-K(1:2)

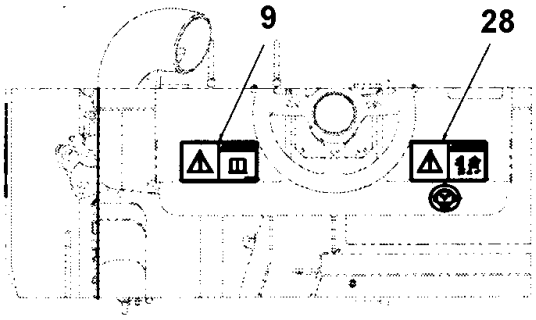
9
28

Item	Part No.	Name	Qty	L	SN INFO
38	4812249321	Decal, RH console instruction	1		

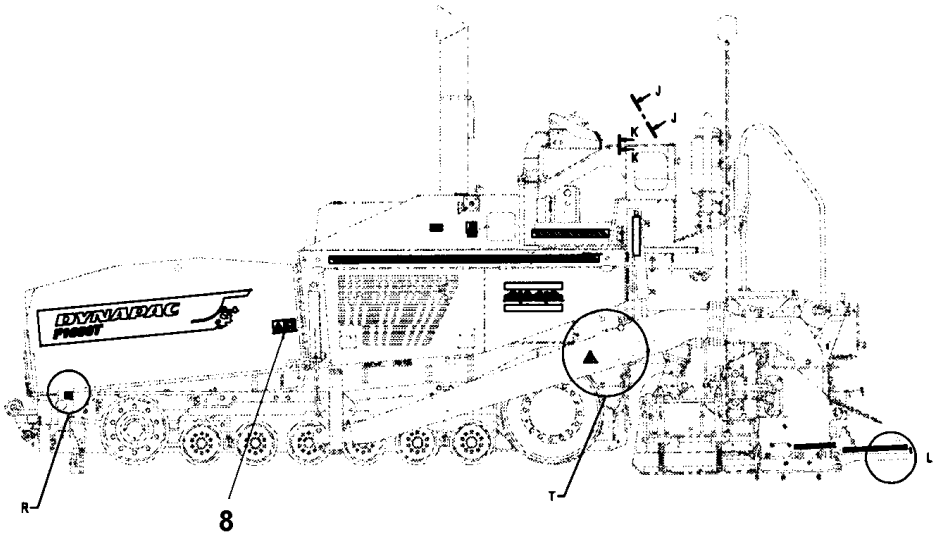
DYNAPAC
R
8
T
L

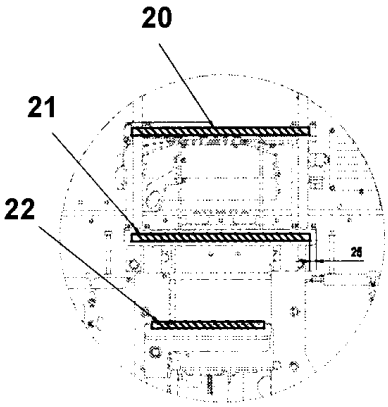
20
21
22

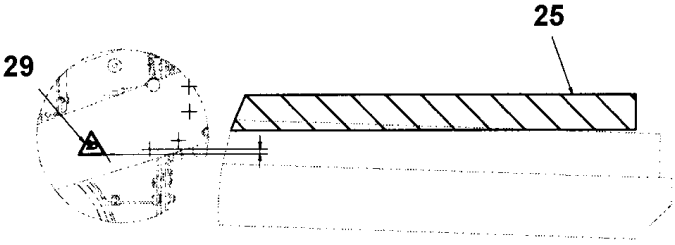
29
25

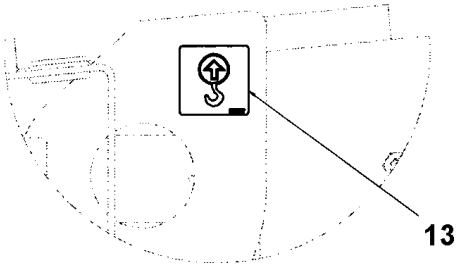
13

This page intentionally left blank

Extension auger 1ft kit Extension auger 1 FT kit

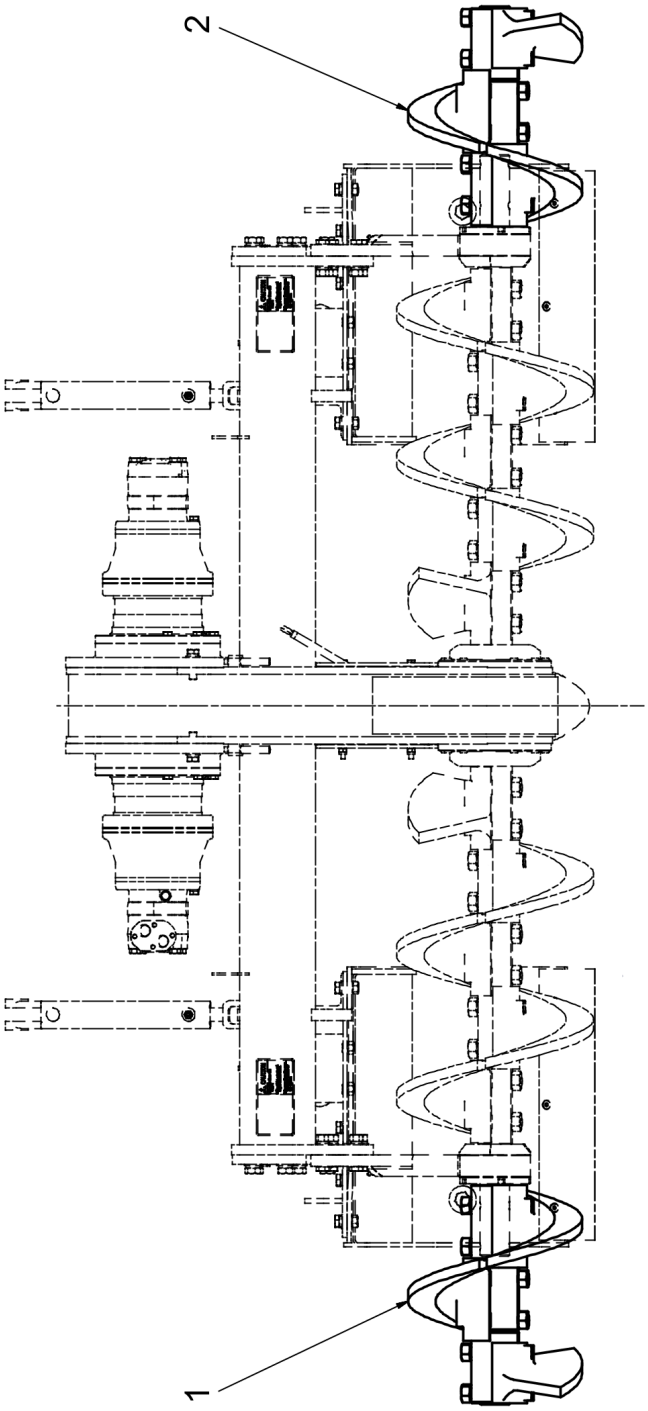

Item	Part No.	Name	Qty	L	SN INFO
1	4812248823	Left extension auger 1FT kit	1		
2	4812248825	Right extension auger 1FT kit	1		

Extension auger 1ft kit 4812248823 Left extension auger 1FT kit

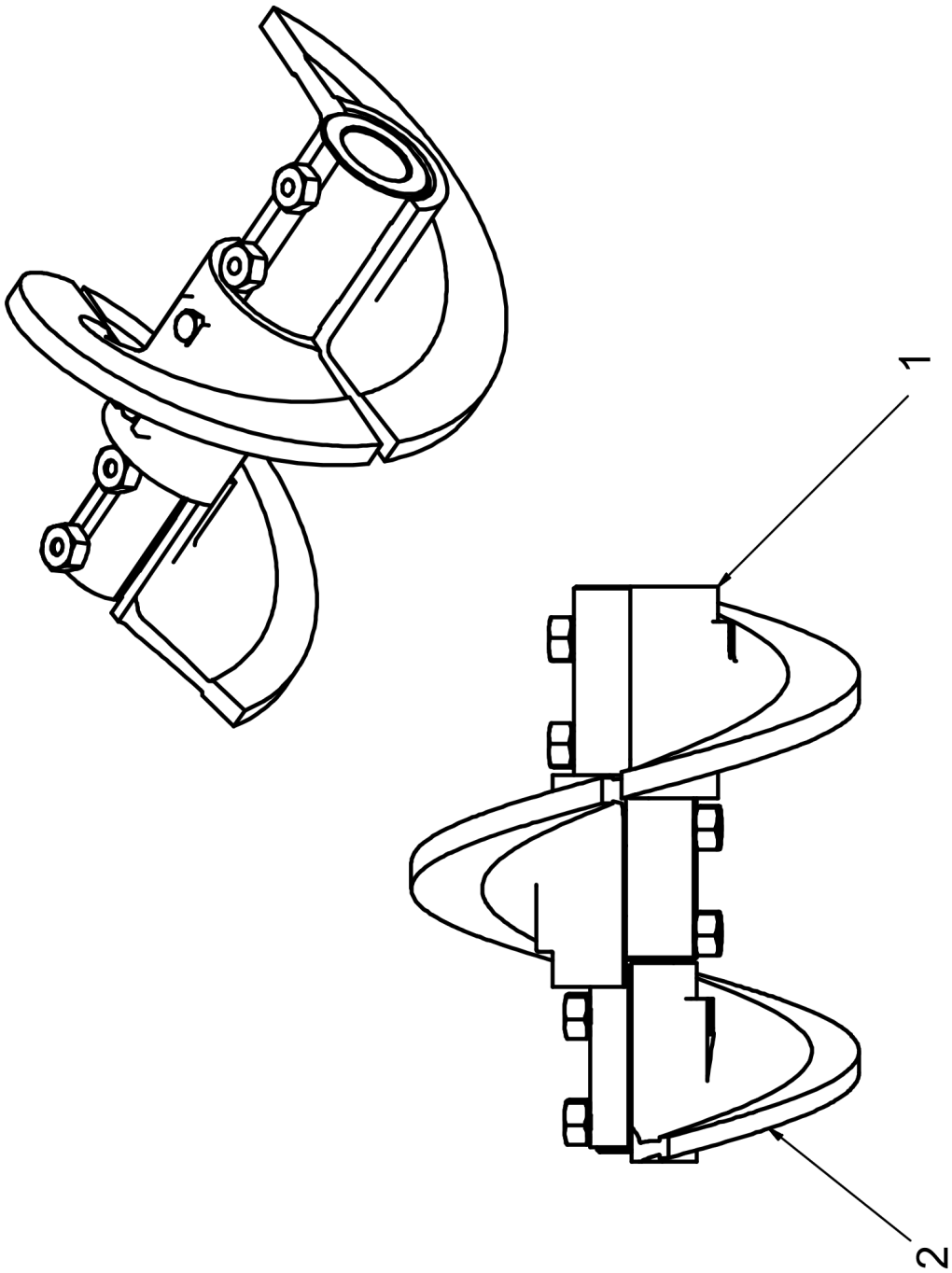

Item	Part No.	Name	Qty	L	SN INFO
1	4812247107	Extend auger	1		
2	4812204563	Left extend auger 380-168	1		

Extension auger 1ft kit Extend auger 380-2 left

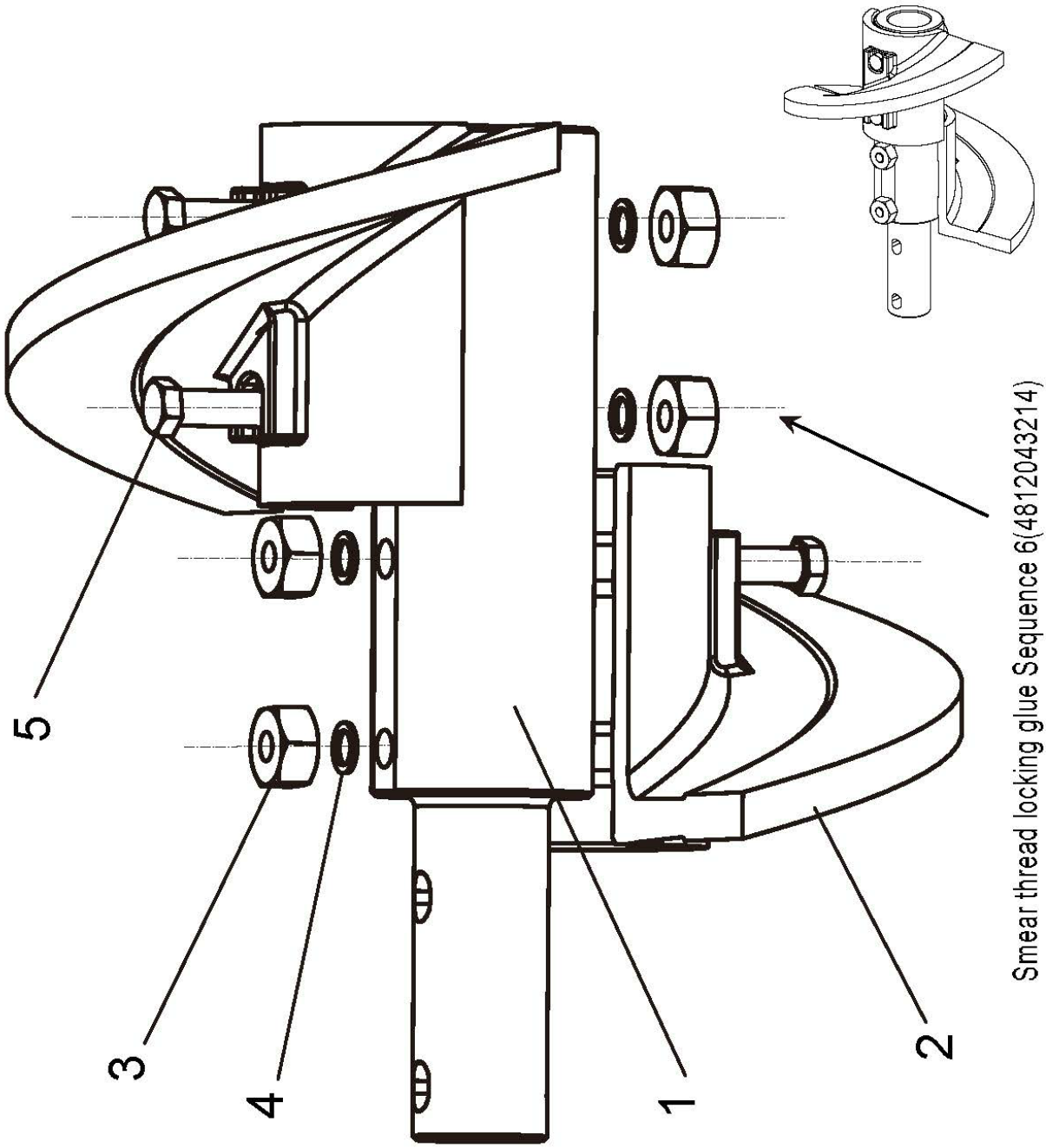

Item	Part No.	Name	Qty	L	SN INFO
1	4812247068	Shaft	1		
2	4812246070	Left special half auger, 380mm	2		
3	4749901556	Nut	4		
4	0333310042	Schnorr-lock washer	4		
5	4812247066	Bolt	4		
6		Glue x l	0.004		

Extension auger 1ft kit 4812204563 Left extend auger

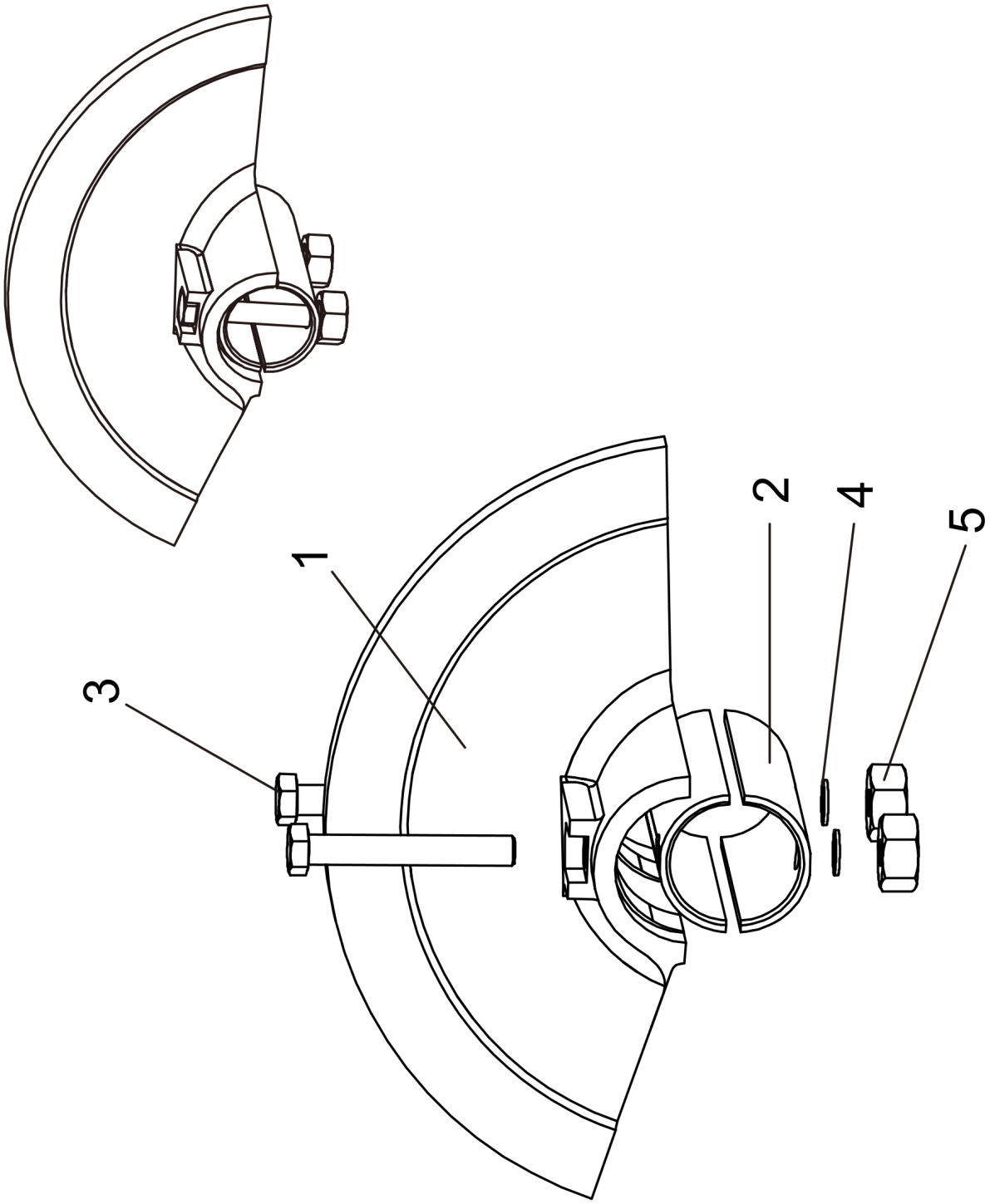

Item	Part No.	Name	Qty	L	SN INFO
1	D380001258	Auger wing, l.h., short	1		
2	4812203211	Sleeve	2		
3	0147149103	Hex head screw	2		
4	0333310042	Schnorr-lock washer	2		
5	4749901556	Nut	2		

Extension auger 1ft kit 4812248825 Right extension auger 1FT kit

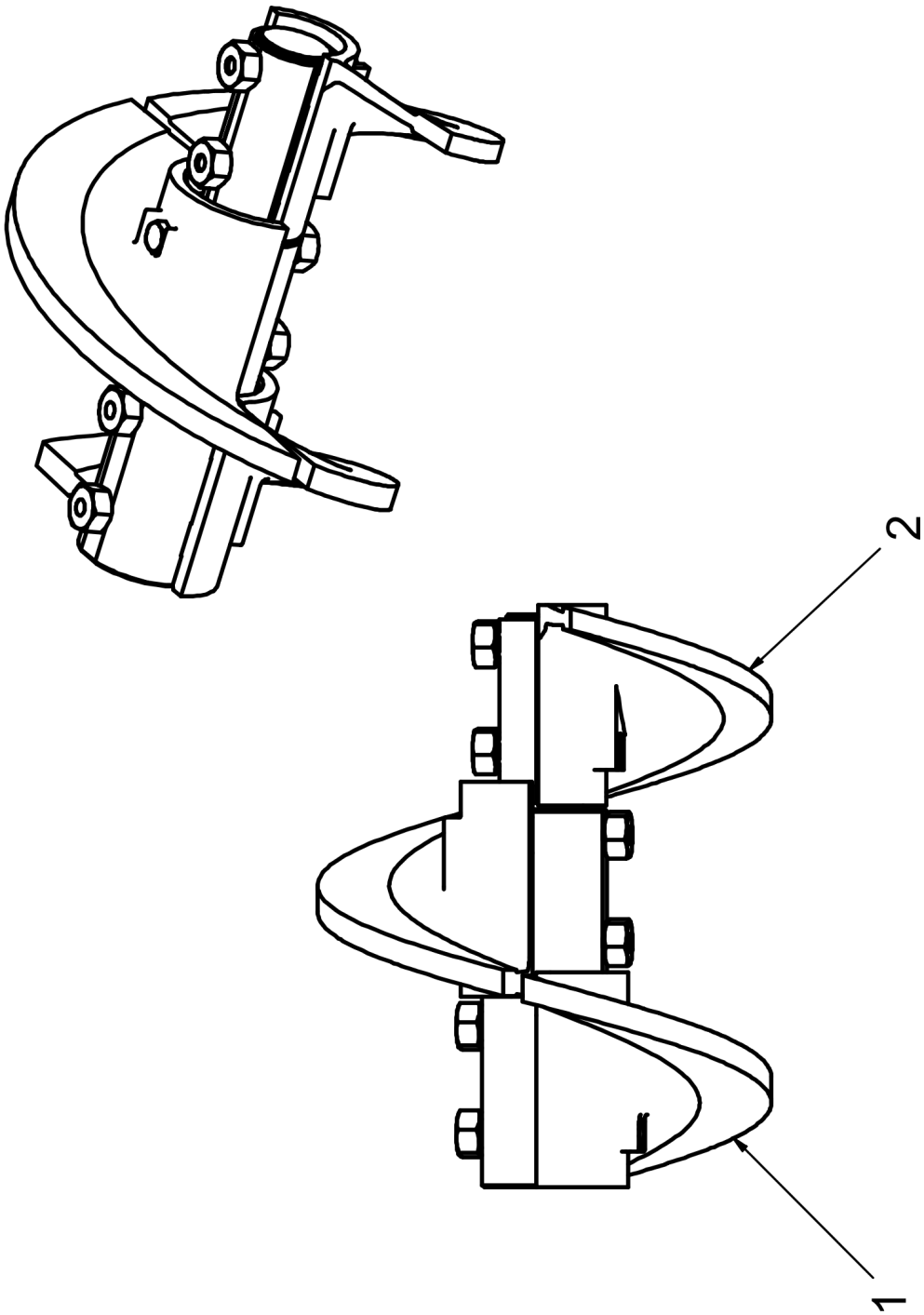

Item	Part No.	Name	Qty	L	SN INFO
1	4812247108	Extend auger	1		
2	4812204580	Right extend auger 380-168	1		

Extension auger 1ft kit Extend auger 380-2 right

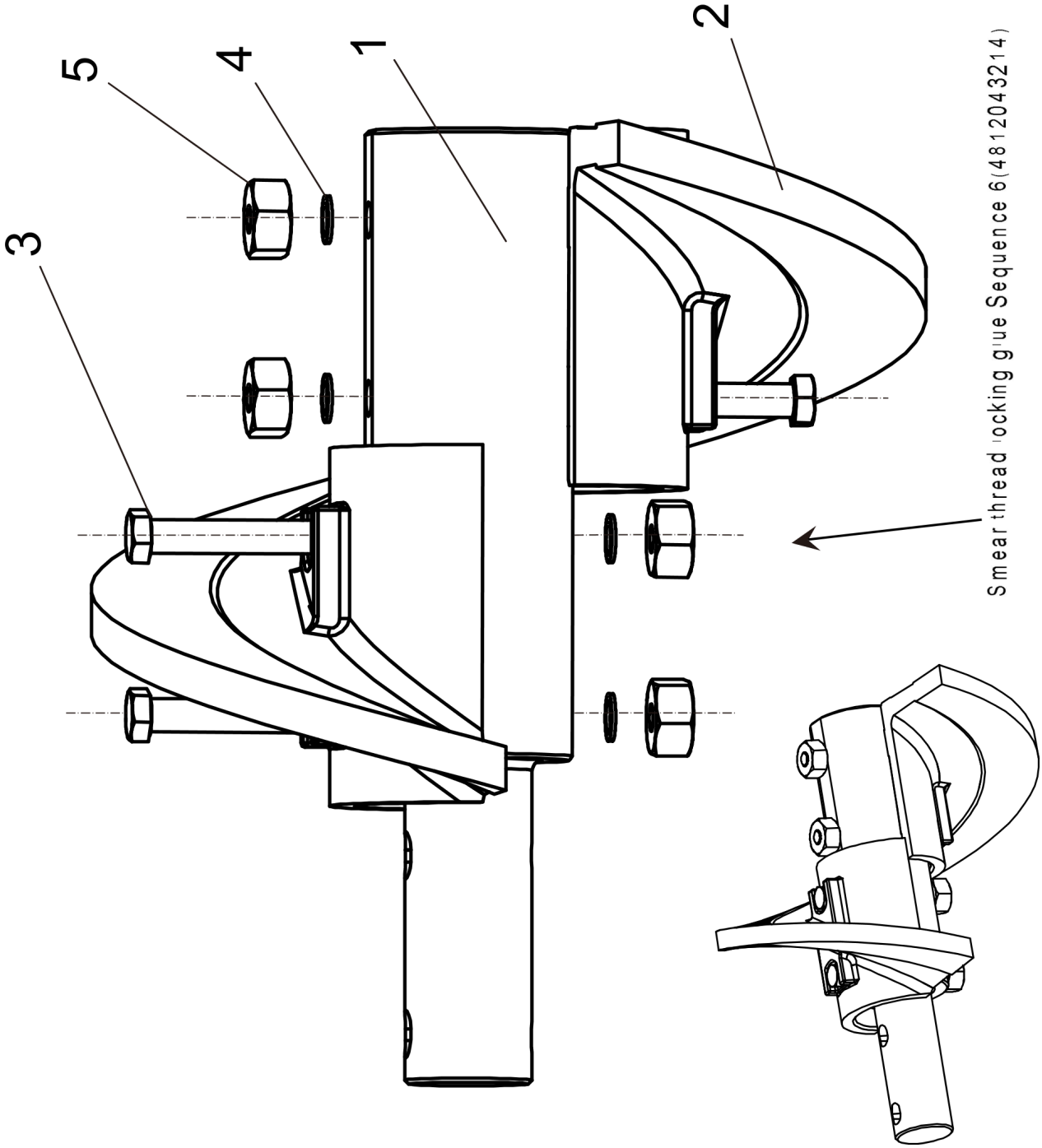

Item	Part No.	Name	Qty	L	SN INFO
1	4812247068	Shaft	1		
2	4812246071	Right special half auger,380mm	2		
3	4812247066	Bolt	4		
4	0333310042	Schnorr-lock washer	4		
5	4749901556	Nut	4		
6	4812043214	Glue x l	0.004		

Extension auger 1ft kit 4812204580 Right extend auger

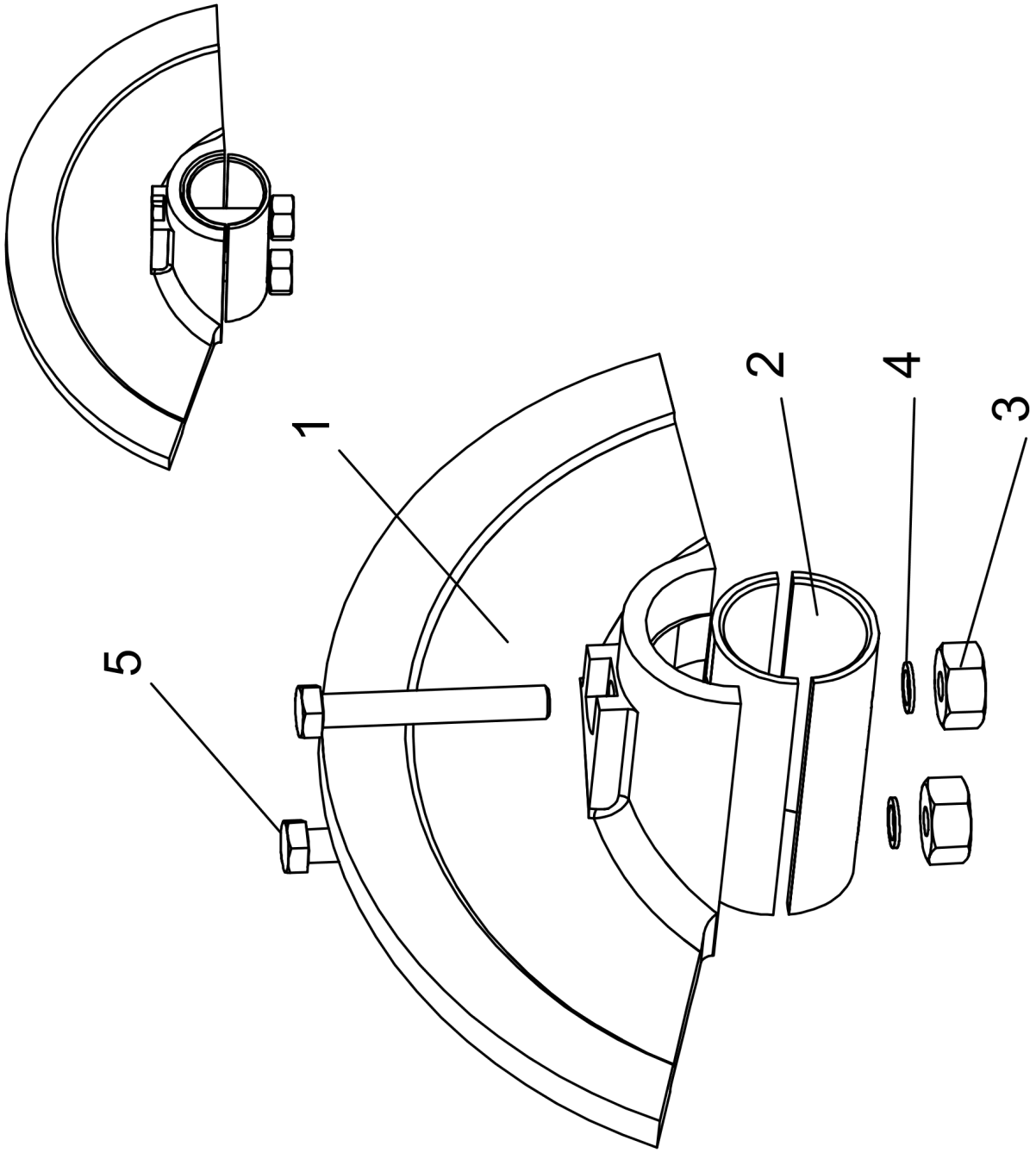

Item	Part No.	Name	Qty	L	SN INFO
1	D380001259	Auger wing, r.h., short	1		
2	4812203211	Sleeve	2		
3	4749901556	Nut	2		
4	0333310042	Schnorr-lock washer	2		
5	0147149103	Hex head screw	2		

Extension auger 2ft kit 4812204104 Extend auger 2ft kit

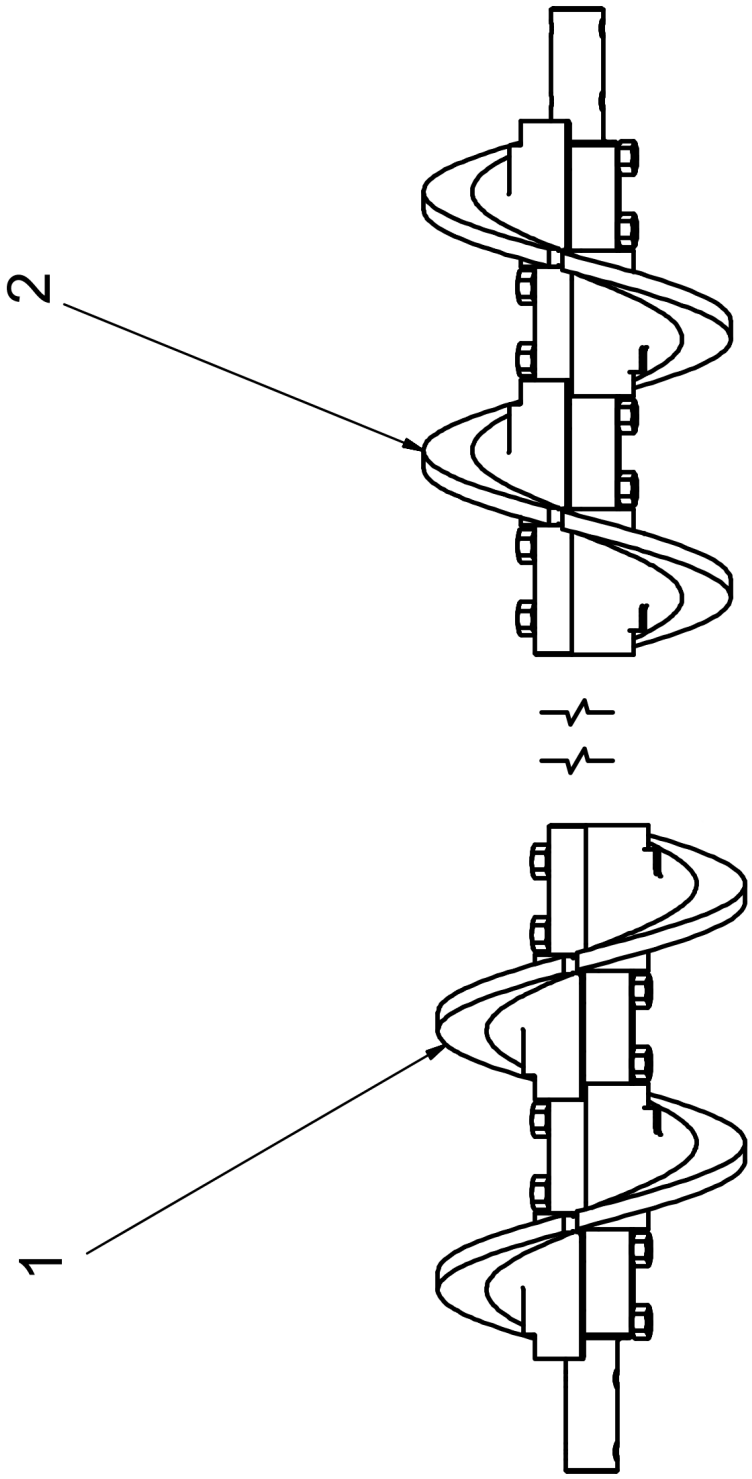

Item	Part No.	Name	Qty	L	SN INFO
1	4812204465	Extend auger 380-4 left	1		
2	4812204467	Extend auger 380-4 right	1		

Extension auger 2ft kit 4812204465 Extend auger 380-4 left

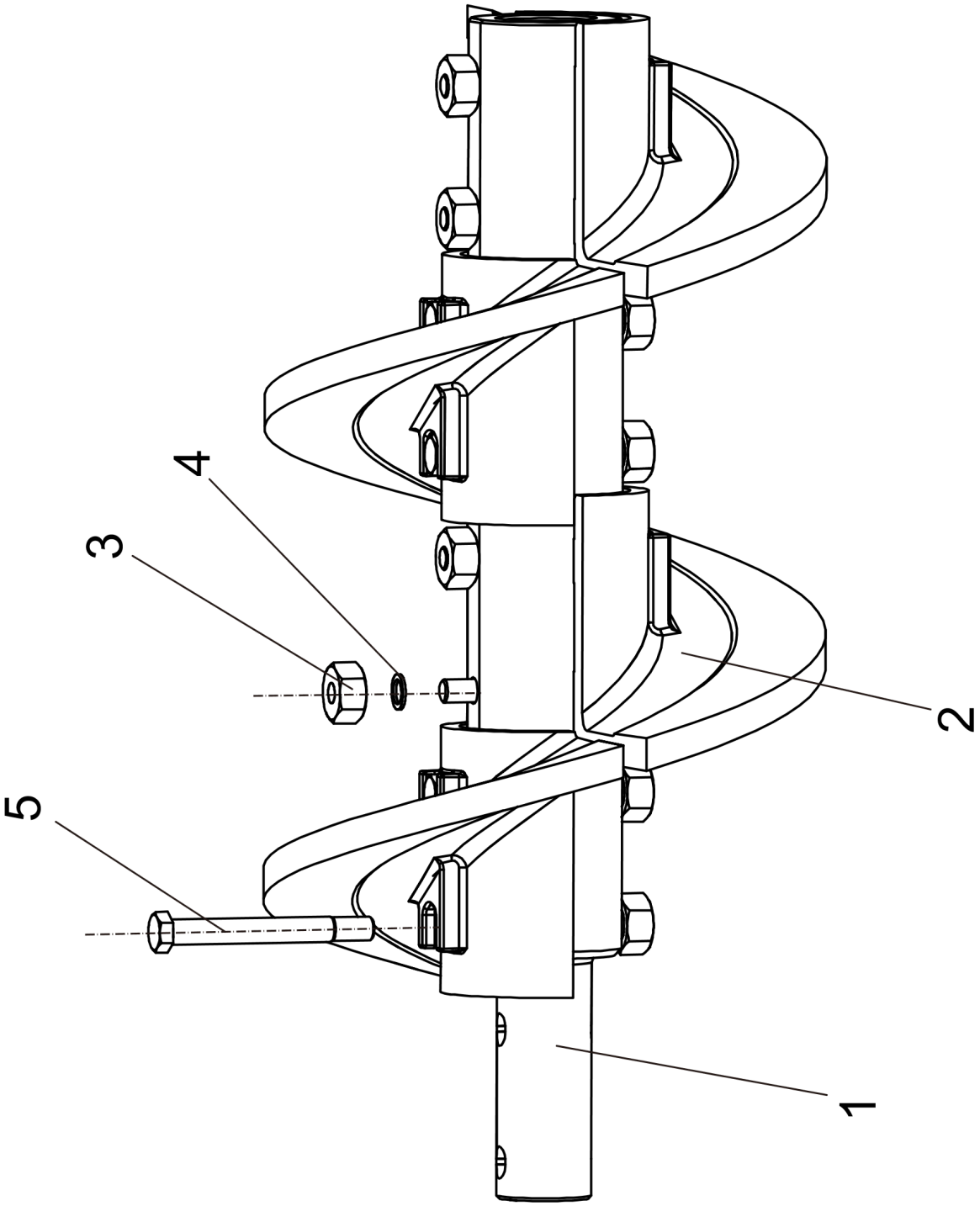

Item	Part No.	Name	Qty	L	SN INFO
1	4812203820	Shaft	1		
2	4812246070	Left special half auger, 380mm	4		
3	4749901556	Nut	8		
4	0333310042	Schnorr-lock washer	8		
5	4812247066	Bolt	8		

Extension auger 2ft kit 4812204467 Extend auger 380-4 right

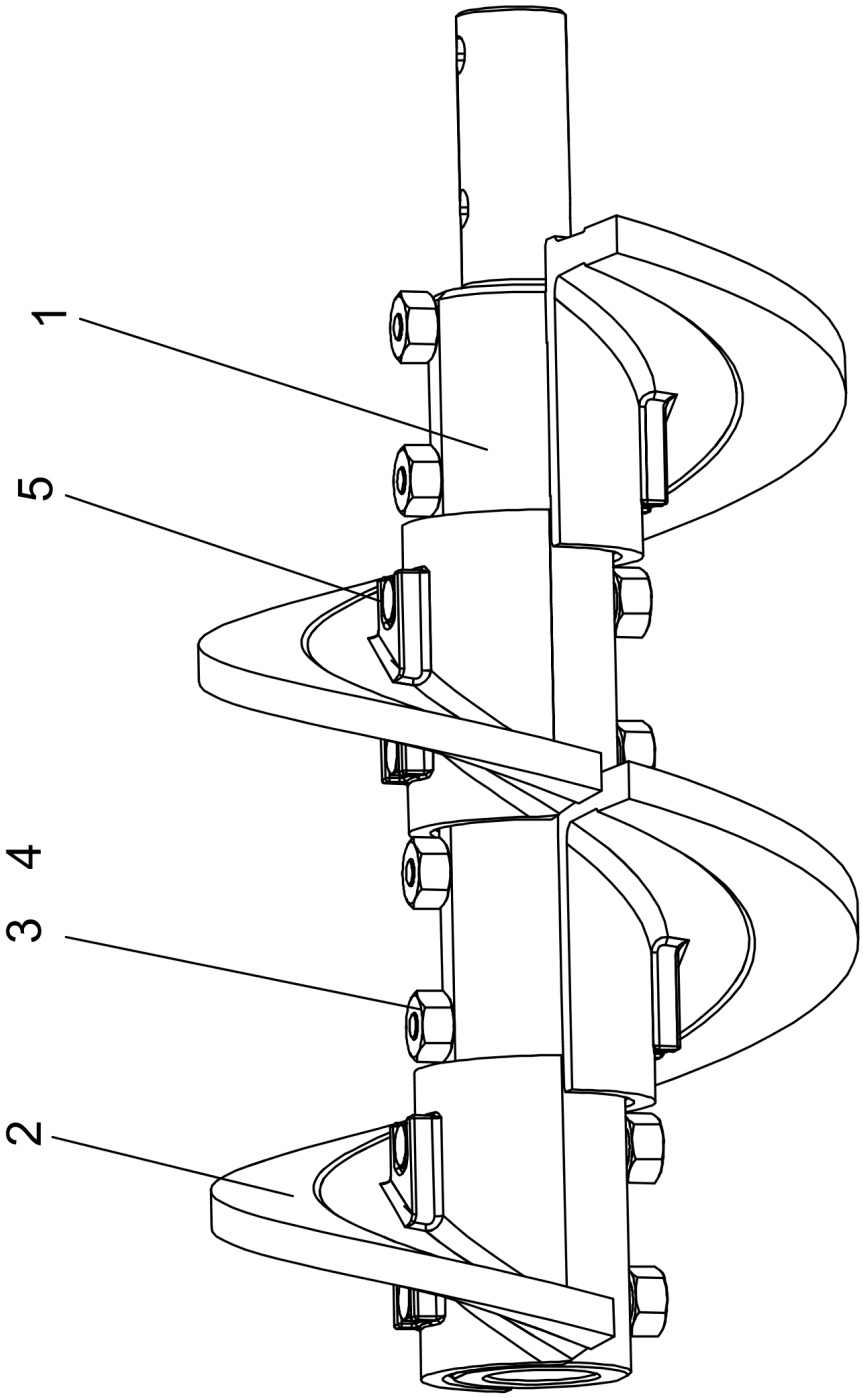

Item	Part No.	Name	Qty	L	SN INFO
1	4812203820	Shaft	1		
2	4812246071	Right special half auger,380mm	4		
3	4749901556	Nut	8		
4	0333310042	Schnorr-lock washer	8		
5	4812247066	Bolt	8		

Extension auger 3ft kit 4812204768 Extend auger 3ft kit

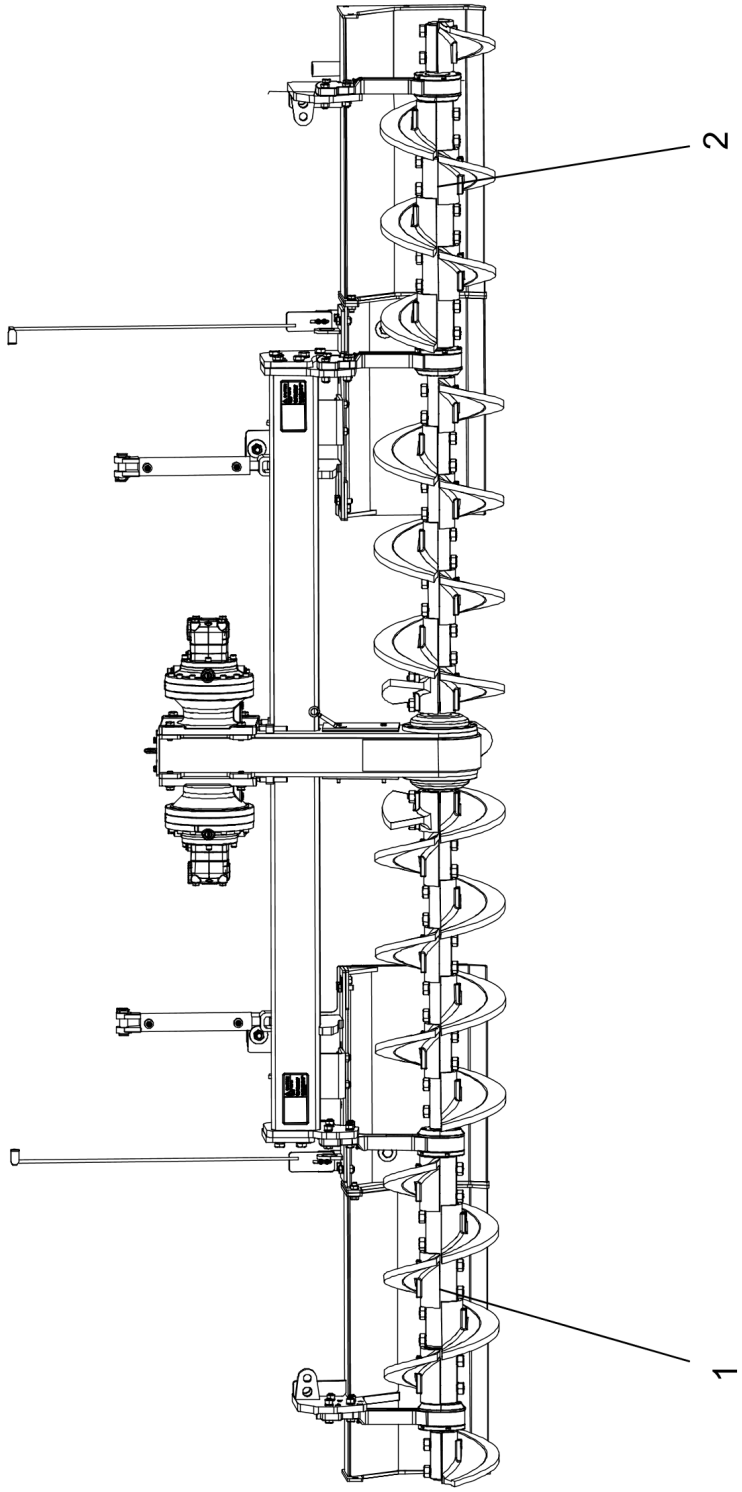

Item	Part No.	Name	Qty	L	SN INFO
1	4812204766	Left extend auger 3ft kit	1		
2	4812204767	Right extend auger 3ft kit	1		

Extension auger 3ft kit 4812204766 Left extend auger 3ft kit

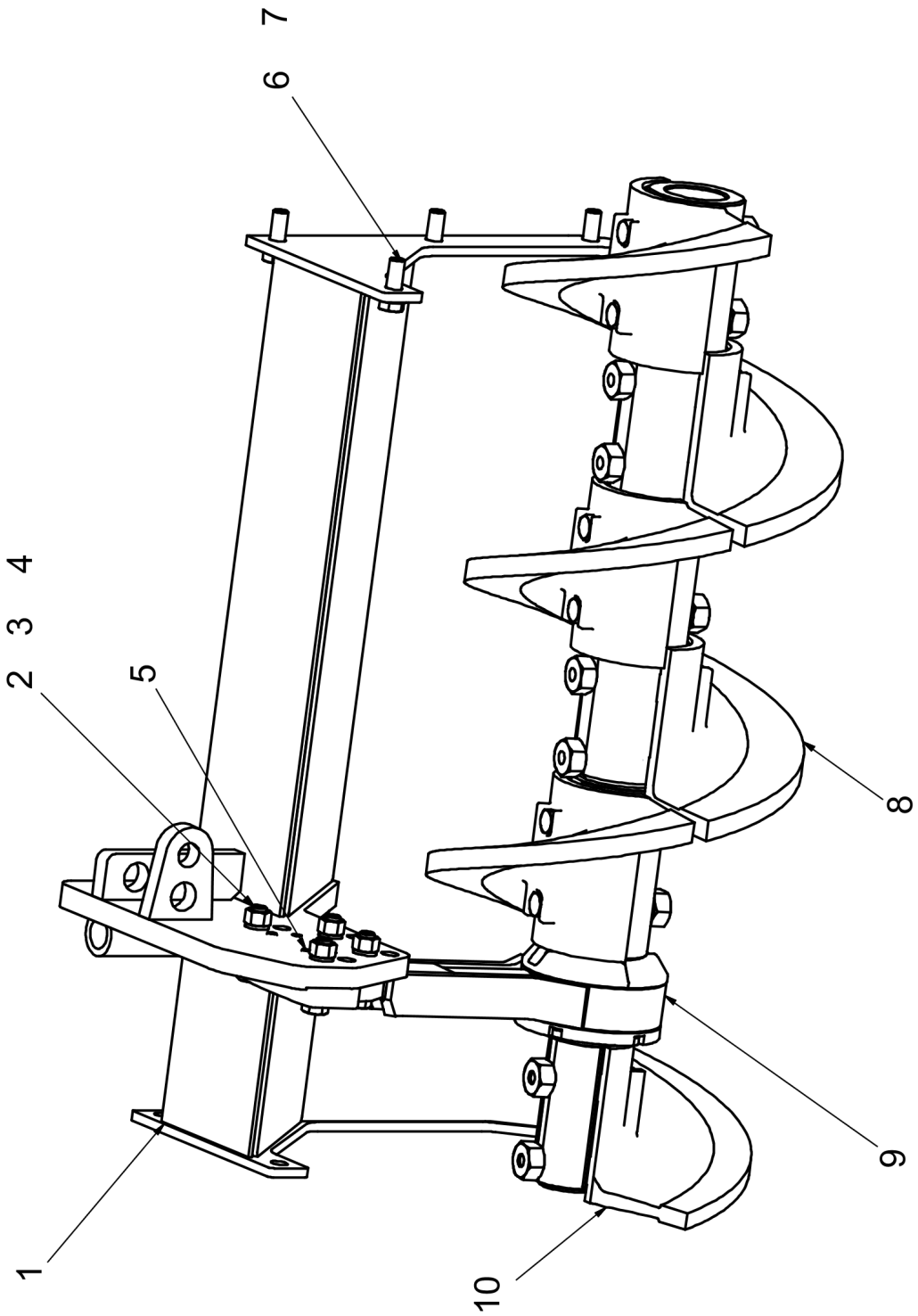

Item	Part No.	Name	Qty	L	SN INFO
1	4812249998	Left striker plate 960mm weldment	1		
2	5540204700	Hexagon head screw	4		
3	5730007616	Hexagon nut	4		
4	4749901809	Schnorr-lock washer	4		
5	4812240304	Pin	2		
6	0147147803	Screw M16 x 45	4		
7	D939776124	Washer	4		
8	4812204465	Extend auger 380-4 left	1		
9		Left bearing retainer assembly	1		
10	4812204563	Left extend auger 380-168	1		

Extension auger 3ft kit Left bearing retainer assembly

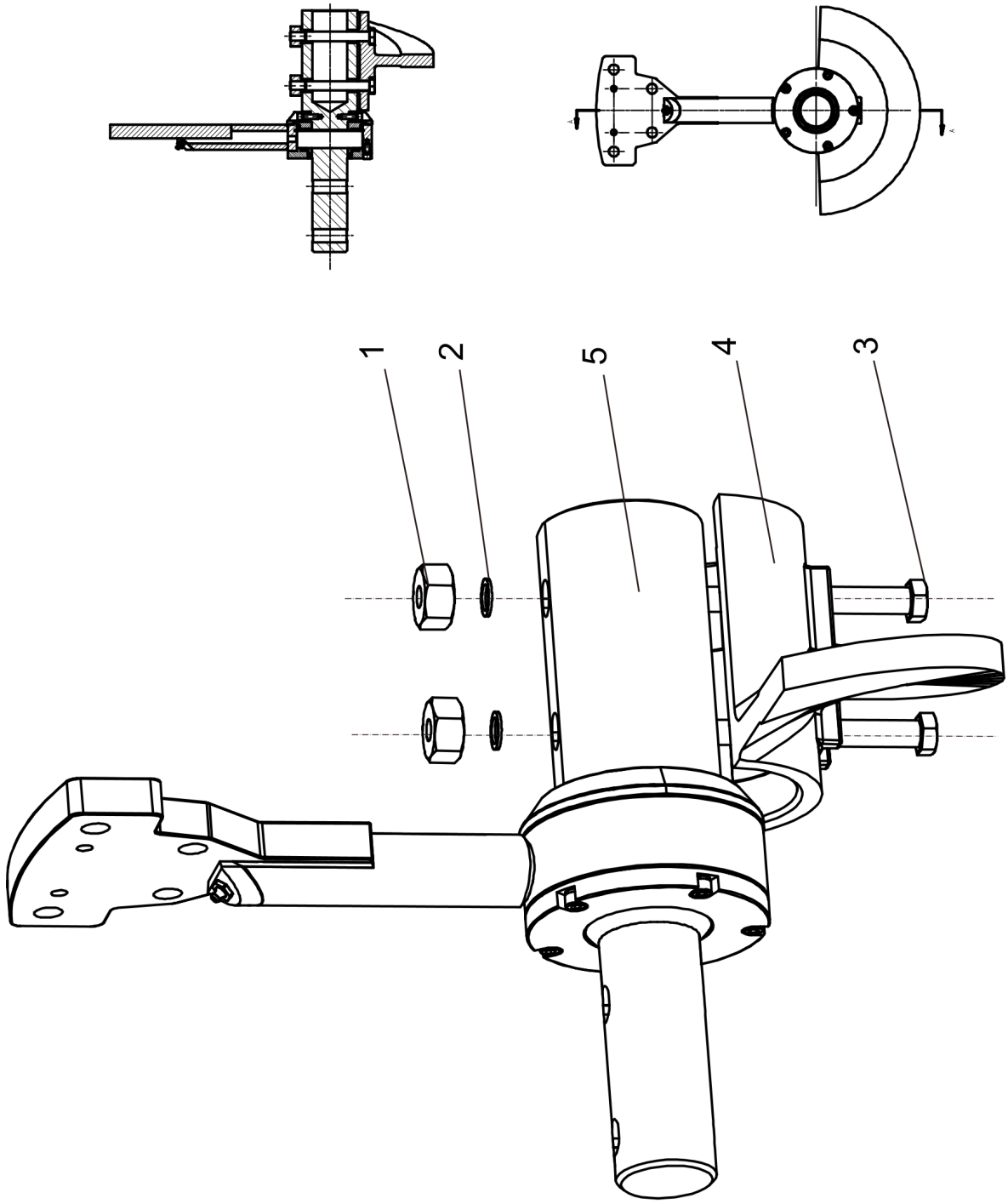

Item	Part No.	Name	Qty	L	SN INFO
1	4749901556	Nut	2		
2	0333310042	Schnorr-lock washer	2		
3	4812247066	Bolt	2		
4	4812246070	Left special half auger, 380mm	1		
5		Bearing retainer assembly	1		

Extension auger 3ft kit Bearing retainer assembly

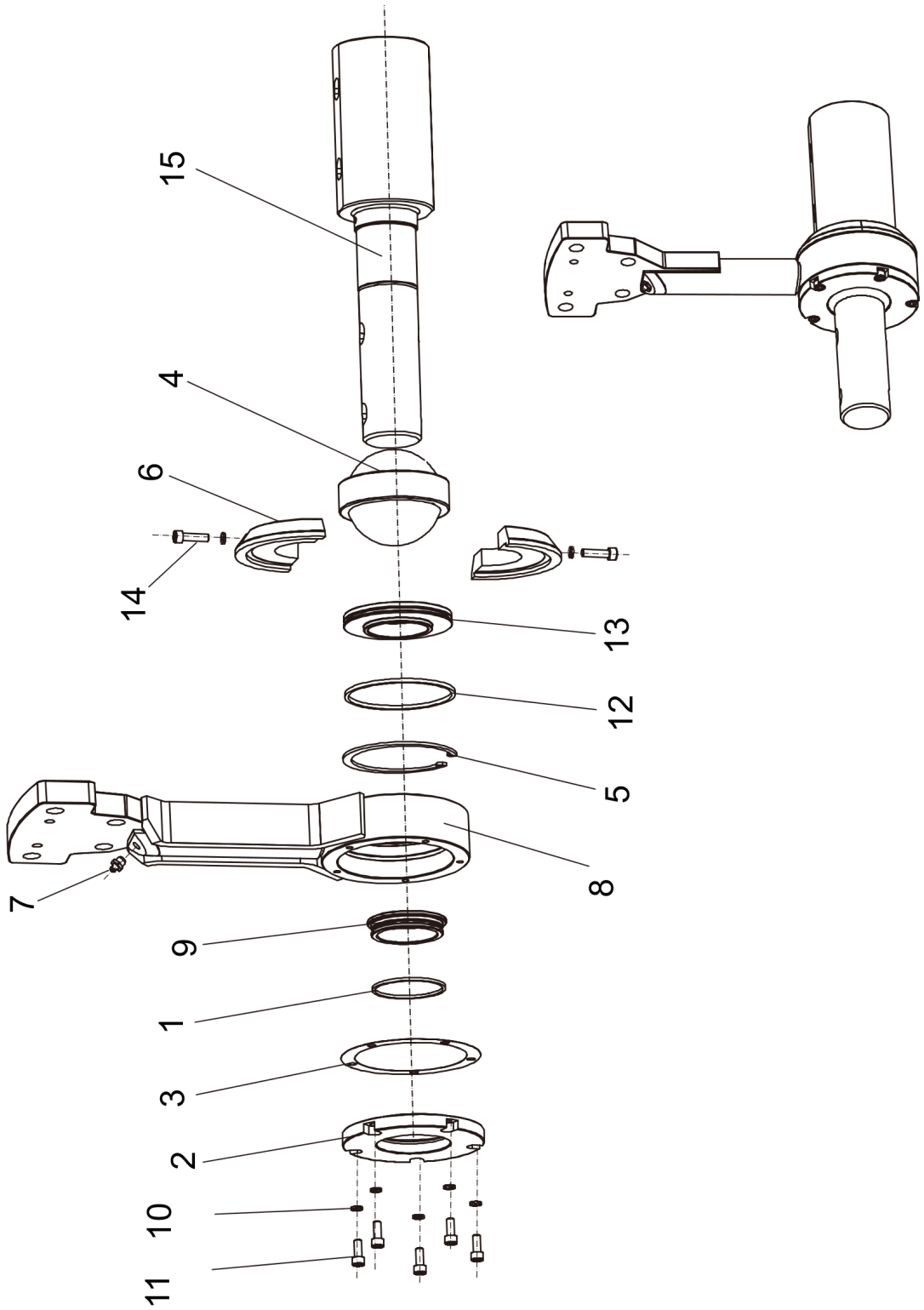

Item	Part No.	Name	Qty	L	SN INFO
1	4812246286	Sealing	1		
2	4812246302	Bearing cap	1		
3	4812246283	Sealing	1		
4	4812240177	Bearing	1		
5	4812240178	Circlip	1		
6	4812246299	Bearing cap up	2		
7	4812240234	Grease nipple	1		
8	4812246303	Bearing retainer	1		
9	4812246301	Sleeve	1		
10	4812240307	Washer	7		
11	0211132303	Hex sock screw	5		
12	4812240135	Sealing	1		
13	4812246300	Bearing cap	1		
14	0211132603	Hexagon socket head cap screw	2		
15	4812247101	Shaft	1		
16	4812040894	Grease	0.12		

Extension auger 3ft kit 4812204767 Right extend auger 3ft kit

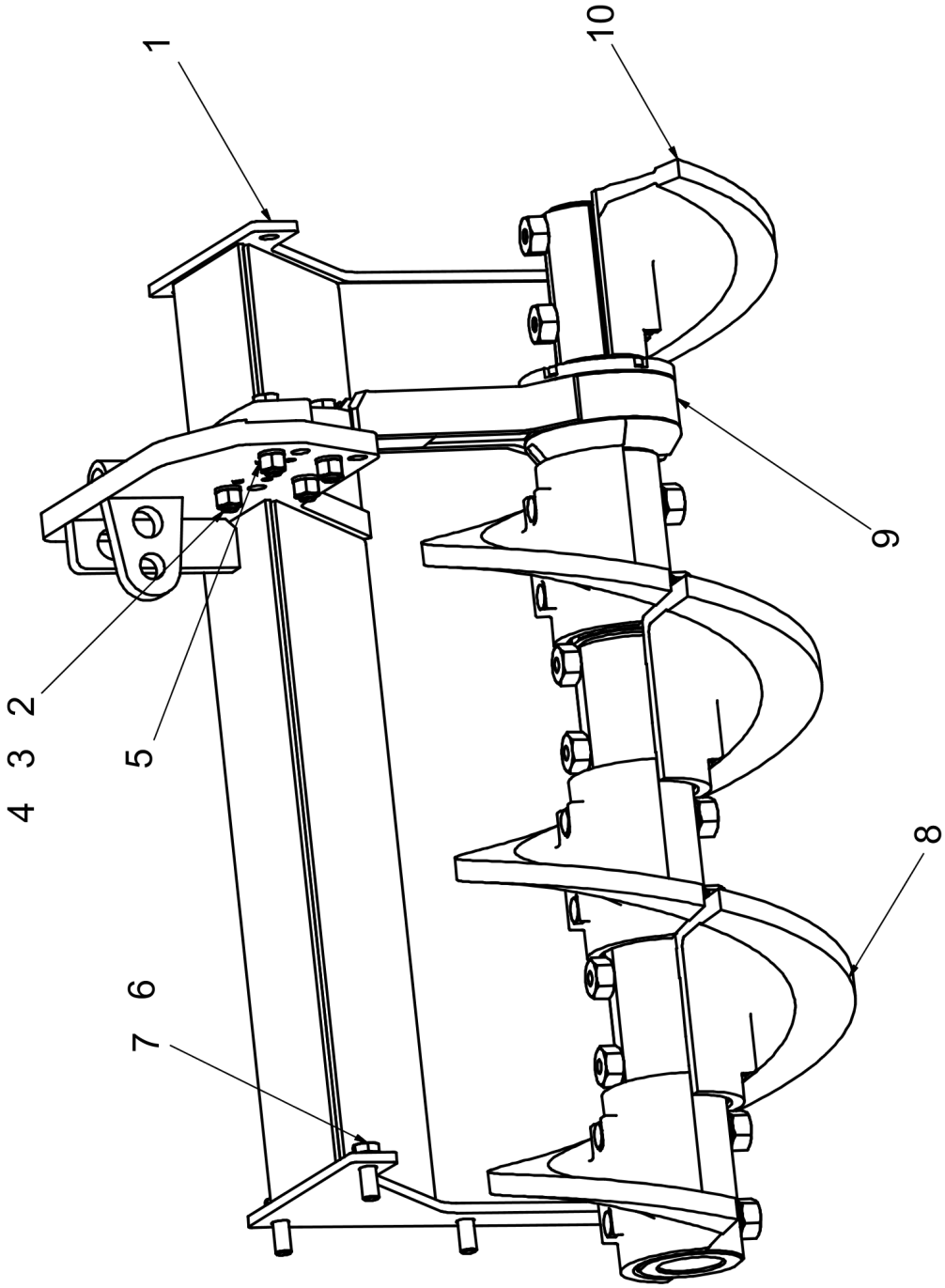

Item	Part No.	Name	Qty	L	SN INFO
1	4812248889	Right striker plate 960mm	1		
2	5540204700	Hexagon head screw	4		
3	5730007616	Hexagon nut	4		
4	4749901809	Schnorr-lock washer	4		
5	4812240304	Pin	2		
6	D939776124	Washer	4		
7	0147147803	Screw M16 x 45	4		
8	4812204467	Extend auger 380-4 right	1		
9	4812247104	Right bearing retainer assembly	1		
10	4812204580	Right extend auger 380-168	1		

Extension auger 3ft kit Right bearing retainer assembly

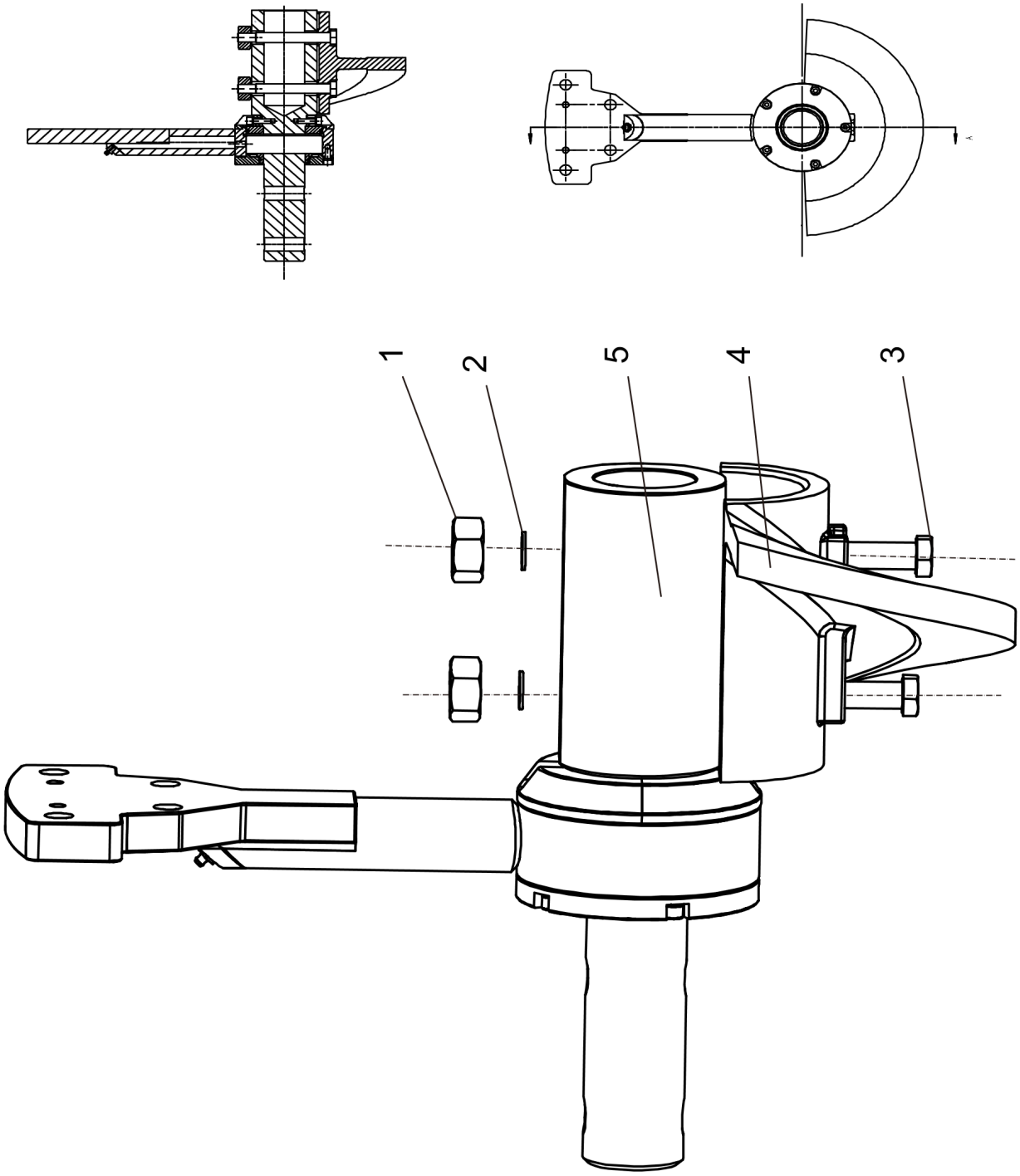

Item	Part No.	Name	Qty	L	SN INFO
1	4749901556	Nut	2		
2	0333310042	Schnorr-lock washer	2		
3	4812247066	Bolt	2		
4	4812246071	Right special half auger,380mm	1		
5		Bearing retainer assembly	1		

4812248808 Auger for 19ft paving width 4812248808 Auger for 19 ft paving width

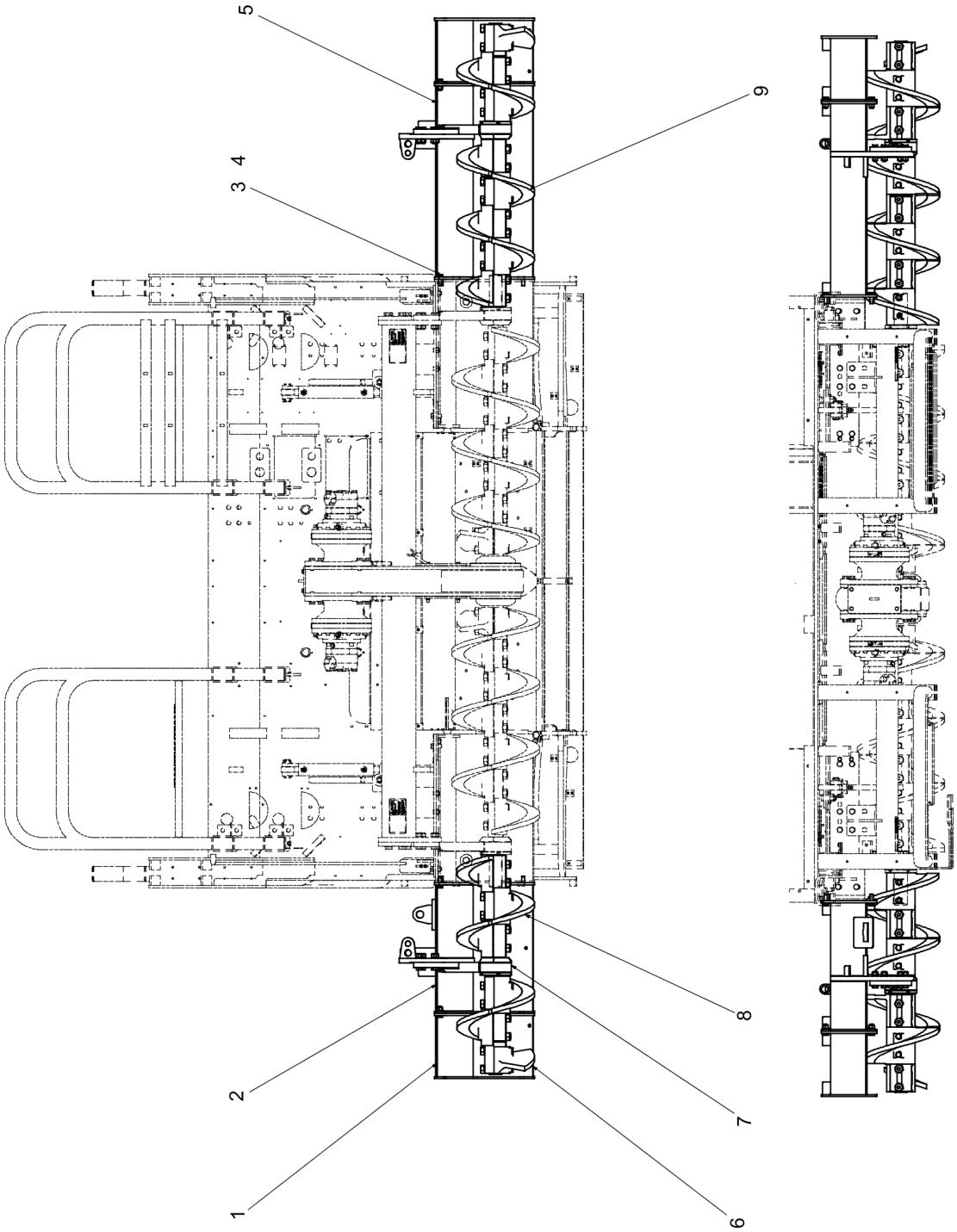

Item	Part No.	Name	Qty	L	SN INFO
1	4812204102	Striker plate width 320mm kit	1		
2	4812203832	Left striker plate 640mm	1		
3	0147147803	Screw M16 x 45	8		
4	D939776124	Washer	8		
5	4812248889	Right striker plate 960mm	1		
6	4812248779	Extention auger 1ft kit	1		
7	4812204103	Bearing retainer kit	1		
8	4812247107	Extend auger	1		
9	4812204467	Extend auger 380-4 right	1		

4812248808 Auger for 19ft paving width 4812204102 Striker plate width 320mm kit

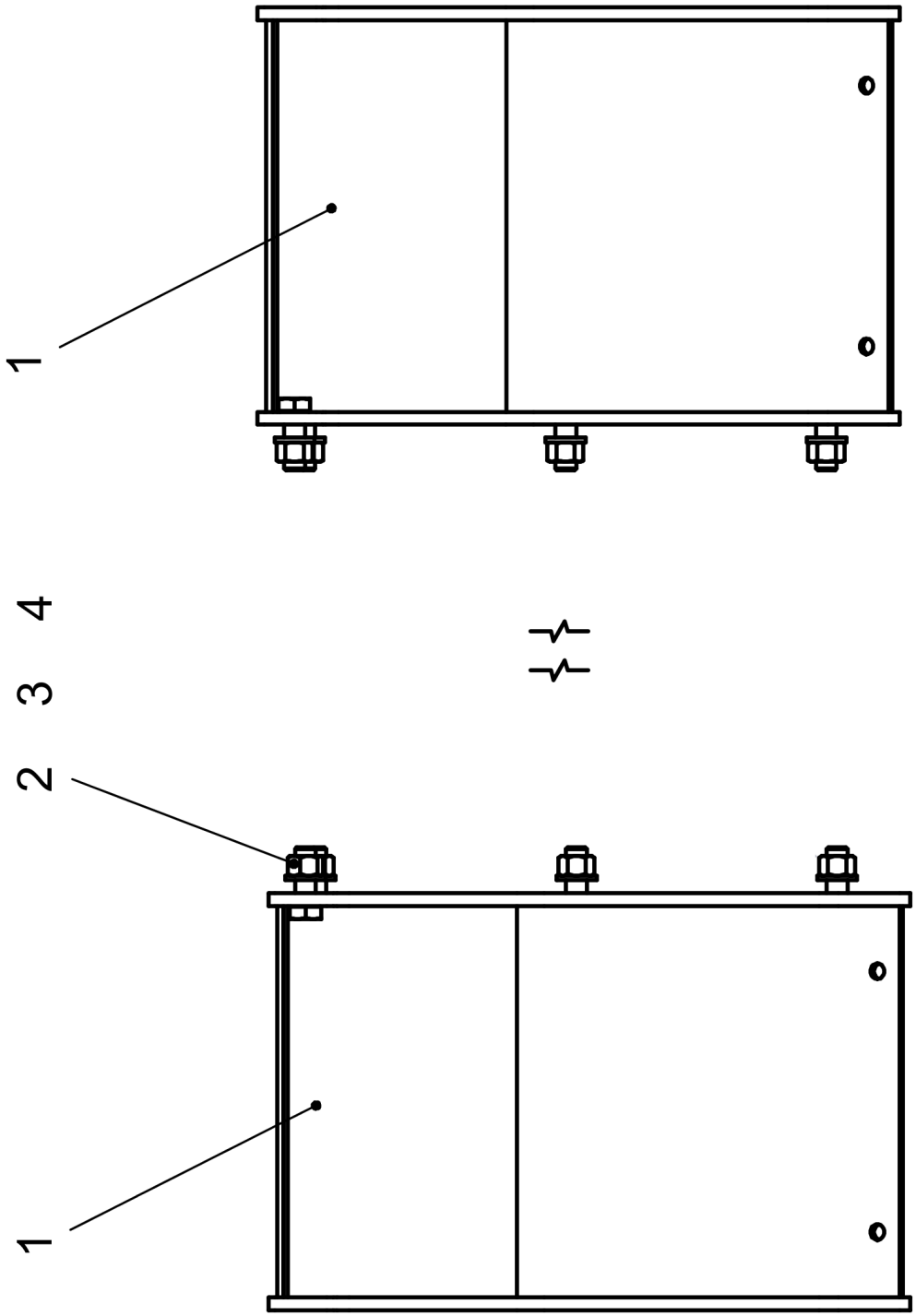

Item	Part No.	Name	Qty	L	SN INFO
1	4812247111	Chute plate 320	2		
2	5730007616	Hexagon nut	8		
3	D939776124	Washer	8		
4	0147147803	Screw M16 x 45	8		

4812204103 Bearing retainer kit 4812204103 Bearing retainer kit

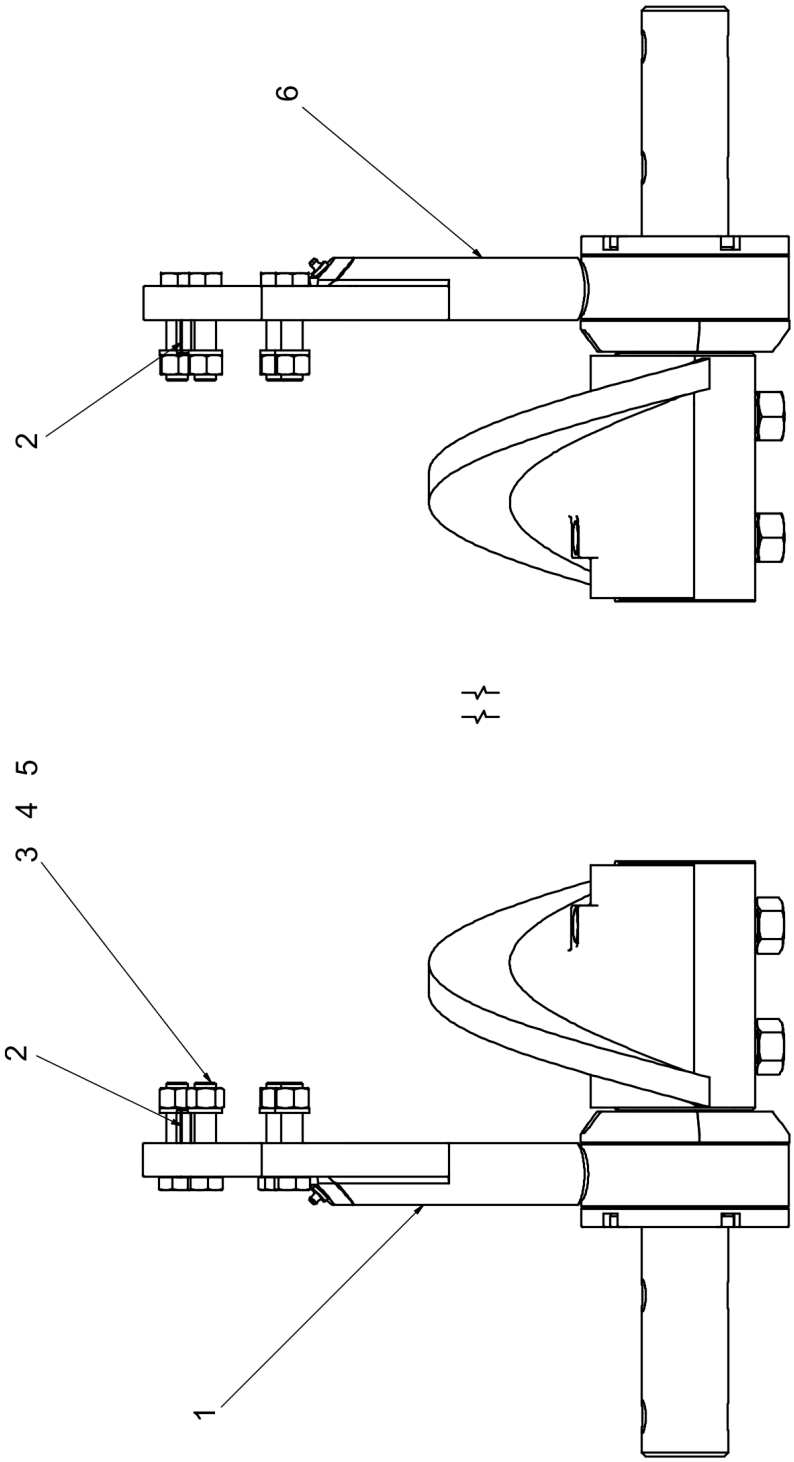

Item	Part No.	Name	Qty	L	SN INFO
1	4812247104	Right bearing retainer assembly	1		
2	4812240304	Pin	4		
3	5540204700	Hexagon head screw	8		
4	4749901809	Schnorr-lock washer	8		
5	5730007616	Hexagon nut	8		
6	4812247103	Left bearing retainer assembly	1		

4812248828 Auger for 26ft paving width 4812248828 Auger for 26ft paving width

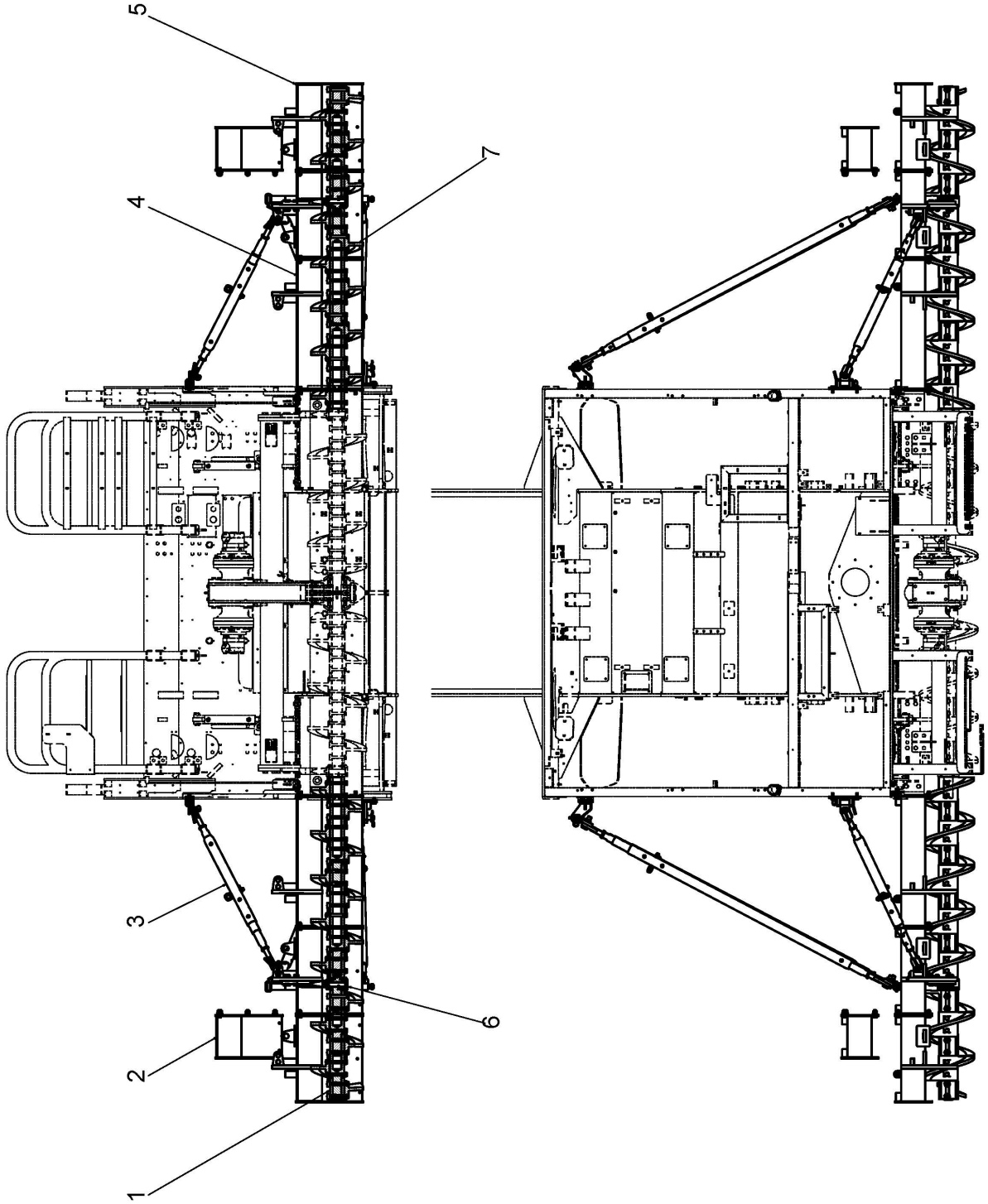

Item	Part No.	Name	Qty	L	SN INFO
1		Extention auger 2ft kit	1		
2		Striker plate width 320mm kit	1		
3		Support rods kit assembly	1		
4		Striker plate width 960mm kit	1		
5		Striker plate width 640mm kit	2		
6		Bearing retainer kit	1		
7		Extend auger 380-4 kit	2		

Extension auger 2ft kit Extension auger 2FT kit

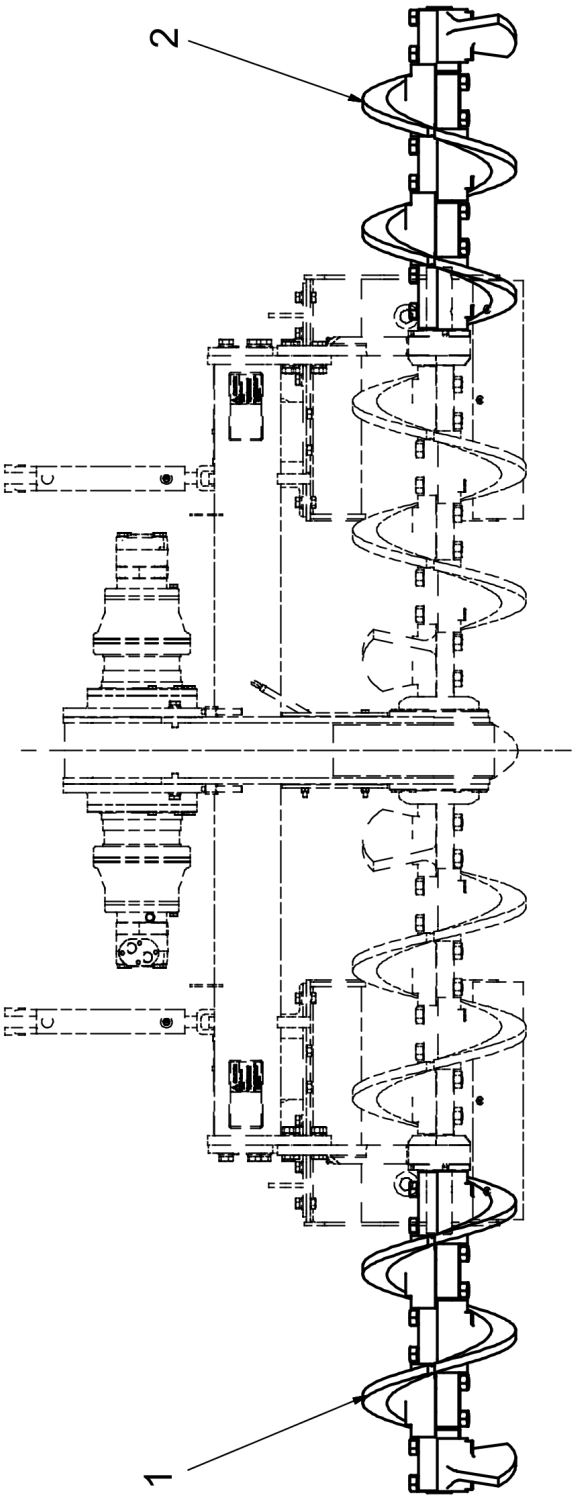

Item	Part No.	Name	Qty	L	SN INFO
1	4812248826	Left extension auger 2FT kit	1		
2	4812248829	Right extension auger 2FT kit	1		

Extension auger 2ft kit 4812248826 Left extension auger 2FT kit

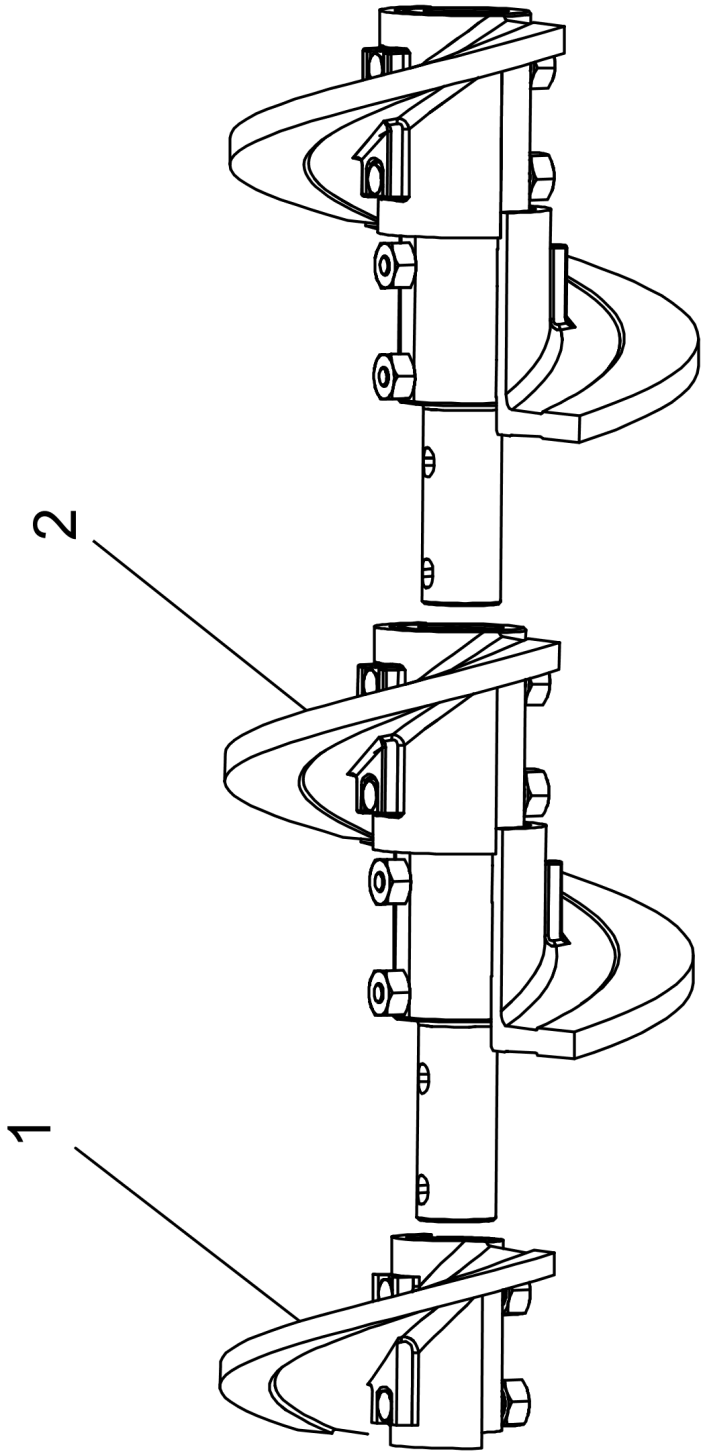

Item	Part No.	Name	Qty	L	SN INFO
1	4812204563	Left extend auger 380-168	1		
2	4812247107	Extend auger	2		

Extension auger 2ft kit 4812248829 Right extension auger 2FT kit

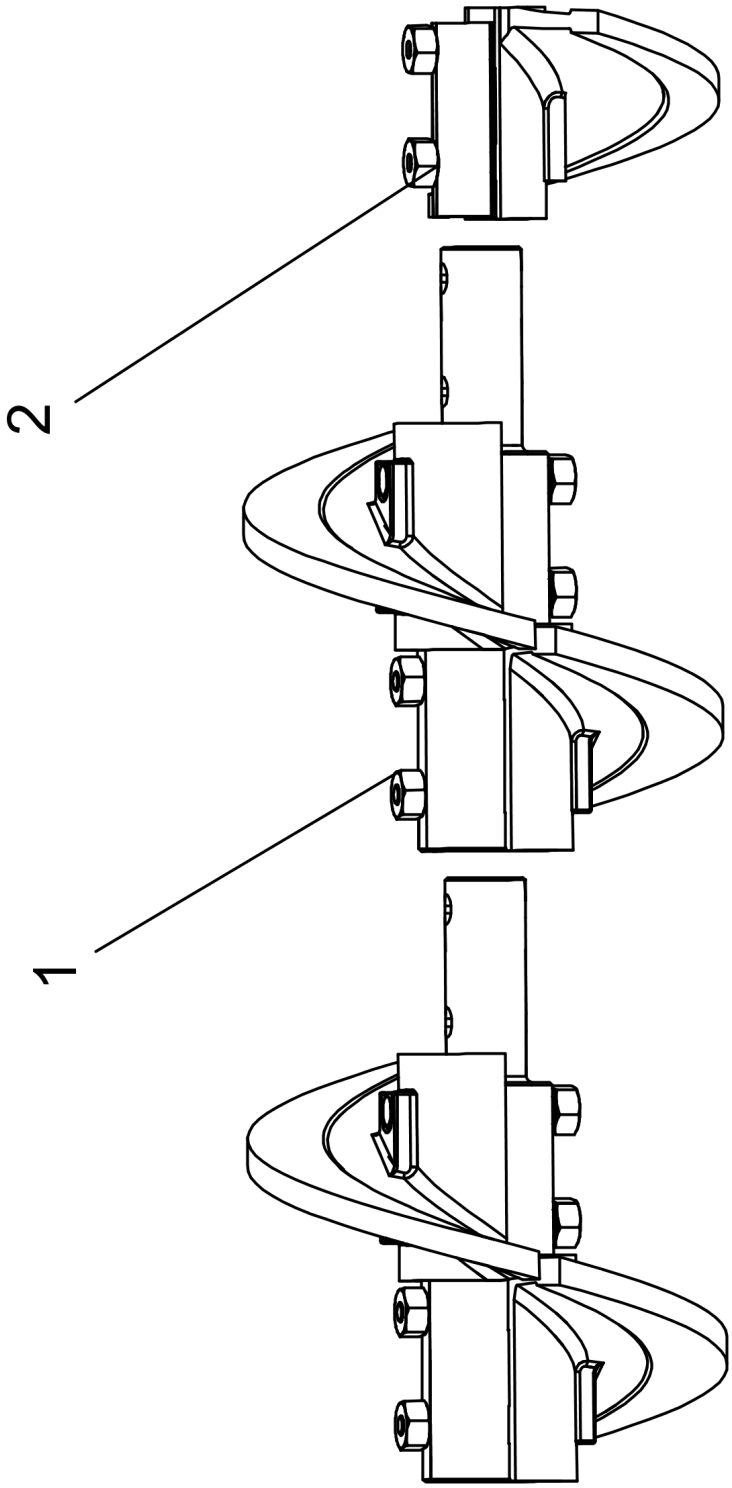

Item	Part No.	Name	Qty	L	SN INFO
1	4812247108	Extend auger	2		
2	4812204580	Right extend auger 380-168	1		

4812204099 Support rods kit assembly 4812204099 Support rods kit assembly

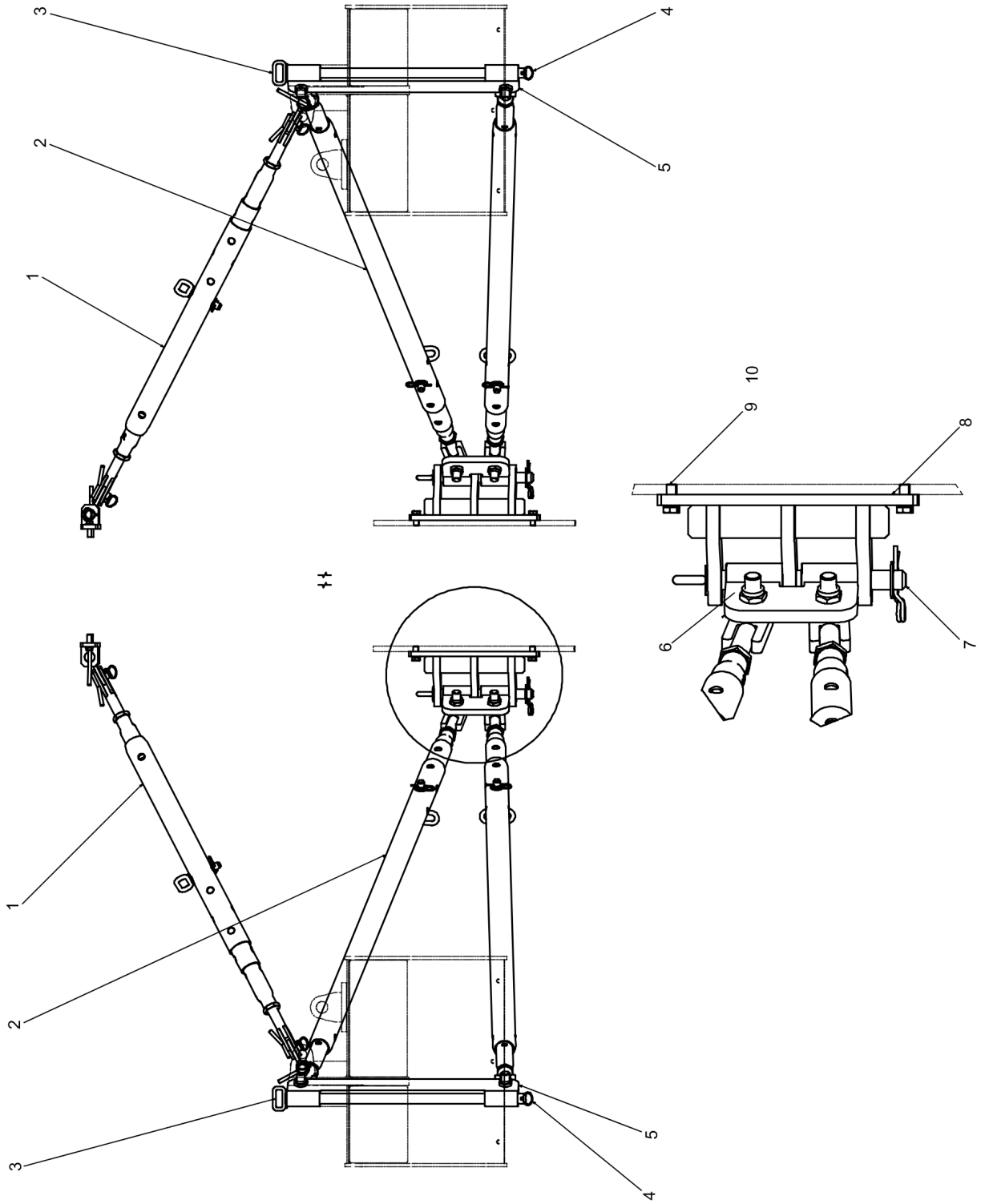

Item	Part No.	Name	Qty	L	SN INFO
1		Pull rod 2000mm	2		
2		Pull rod 3800mm	4		
3	4812241329	Pin	2		
4	D930290105	Hinged split pin	2		
5	4812241328	Swivel bracket	2		
6	D439083600	Fulcrum mounting plate	2		
7	4730010277	Socket pin short	2		
8	4812223393	Arm retainer, weldment	2		
9	4812224361	Hexagon head screws	8		
10	4812223878	Washer	8		

4812204099 Support rods kit assembly 4812204446 Pull rod 2000mm

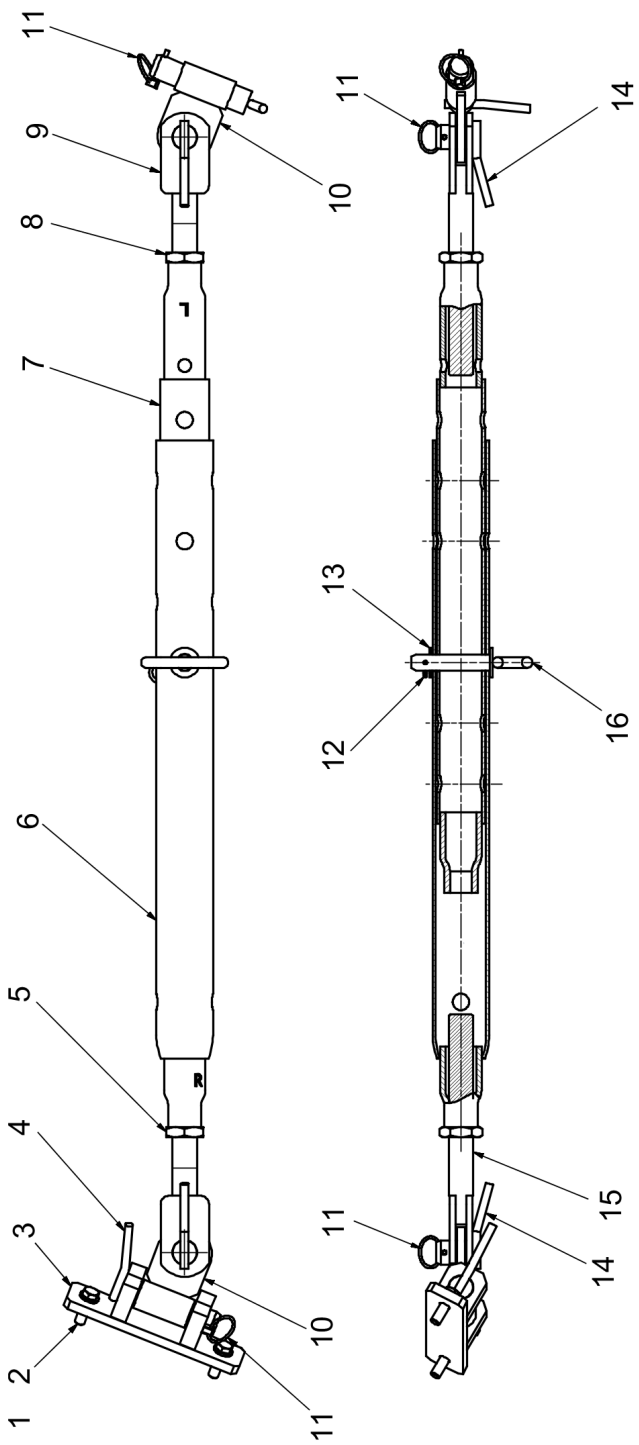

Item	Part No.	Name	Qty	L	SN INFO
1	0301235800	Plain washer(A) 13 x 24 x 2.5	2		
2	0147140303	Hexagon bolt	2		
3	4812223397	Bracket, weldment	1		
4	4812224354	Pin. weldment	2		
5	0261109154	Hexagon nut	1		
6	D635170074	Adjuster piece	1		
7	D635170072	Adjuster	1		
8	0261109972	Hexagon nut	1		
9	4812203895	Rod clevis	1		
10	4812224220	Bracket, weldment	2		
11	D930290105	Hinged split pin	4		
12	D930205111	Spring pin	1		
13	4734051399	Washer	1		
14	D990020153	Bolt	2		
15	D570130609	Fork head	1		
16	D635170080	Socket pin	1		

4812204099 Support rods kit assembly 4812204468 Pull rod 3800mm

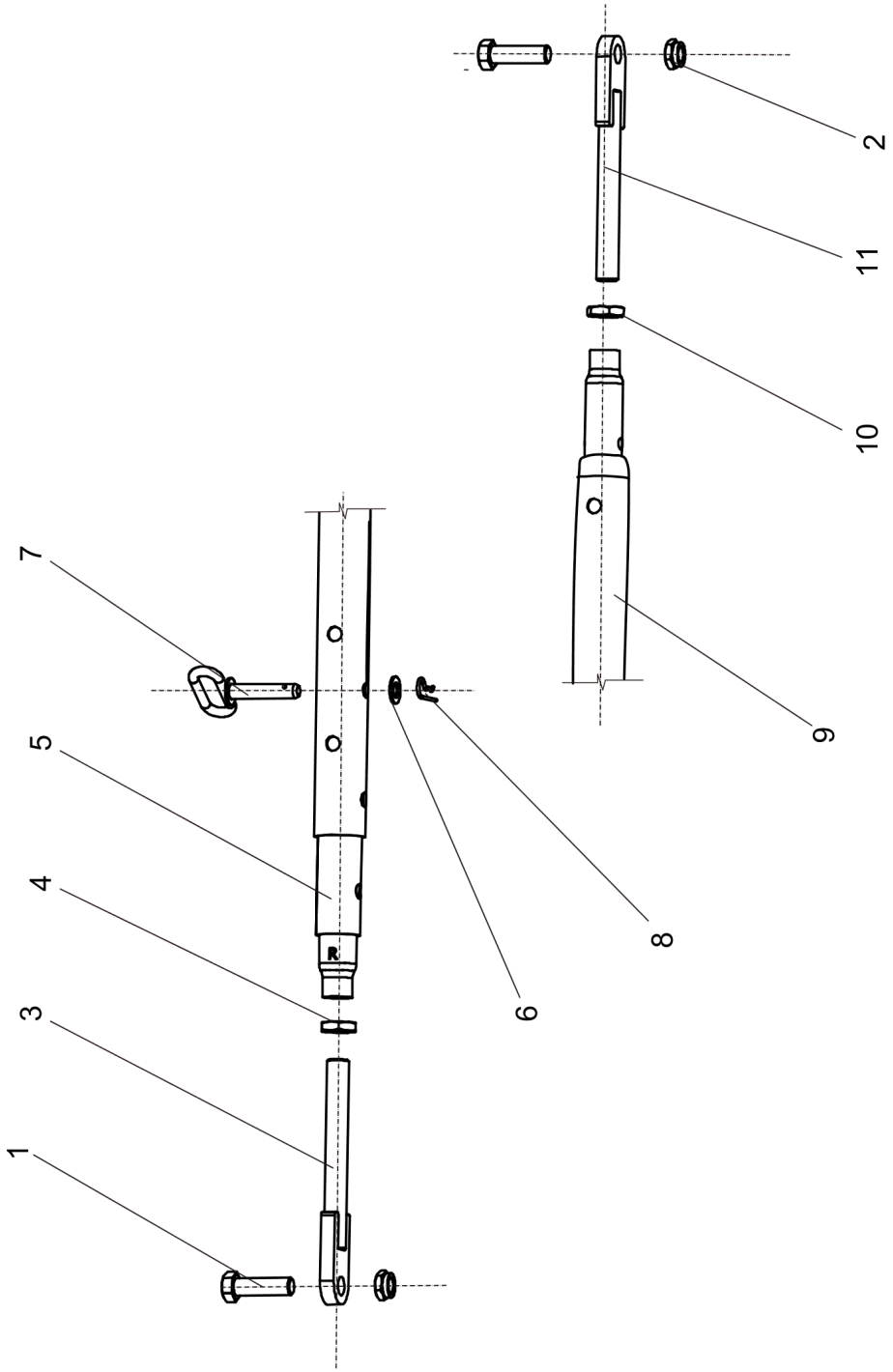

Item	Part No.	Name	Qty	L	SN INFO
1	0147163603	Hexagon head bolt M24 x 80 mm 8.8	2		
2	0291118511	Hexagon nut	2		
3	D439086506	Retaining spindle r.h.	1		
4	0261109154	Hexagon nut	1		
5	D635170076	Adjuster piece	1		
6	4734051399	Washer	1		
7	D635170080	Socket pin	1		
8	D930205111	Spring pin	1		
9	D635170078	Adjuster piece	1		
10	0261109972	Hexagon nut	1		
11	D439086503	Retaining spindle l.h.	1		

4812248828 Auger for 26ft paving width 4812204100 Striker plate width 960mm kit

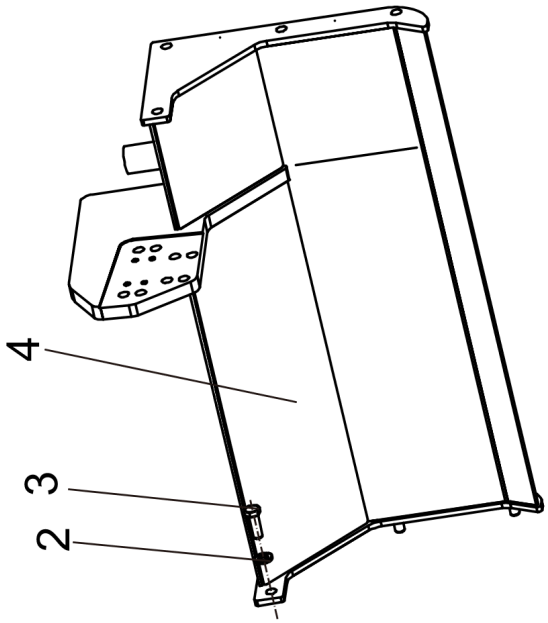

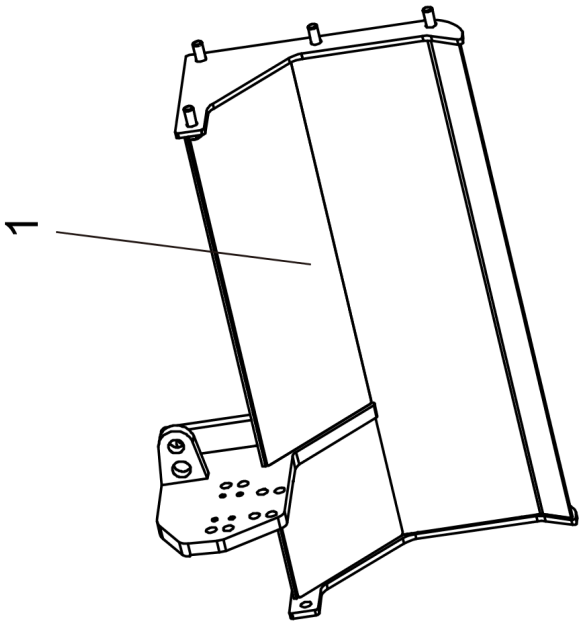

Item	Part No.	Name	Qty	L	SN INFO
1	4812249998	Left striker plate 960mm weldment	1		
2	D939776124	Washer	8		
3	0147147803	Screw M16 x 45	8		
4	4812248889	Right striker plate 960mm	1		

4812248828 Auger for 26ft paving width 4812204101 Striker plate width 640mm kit

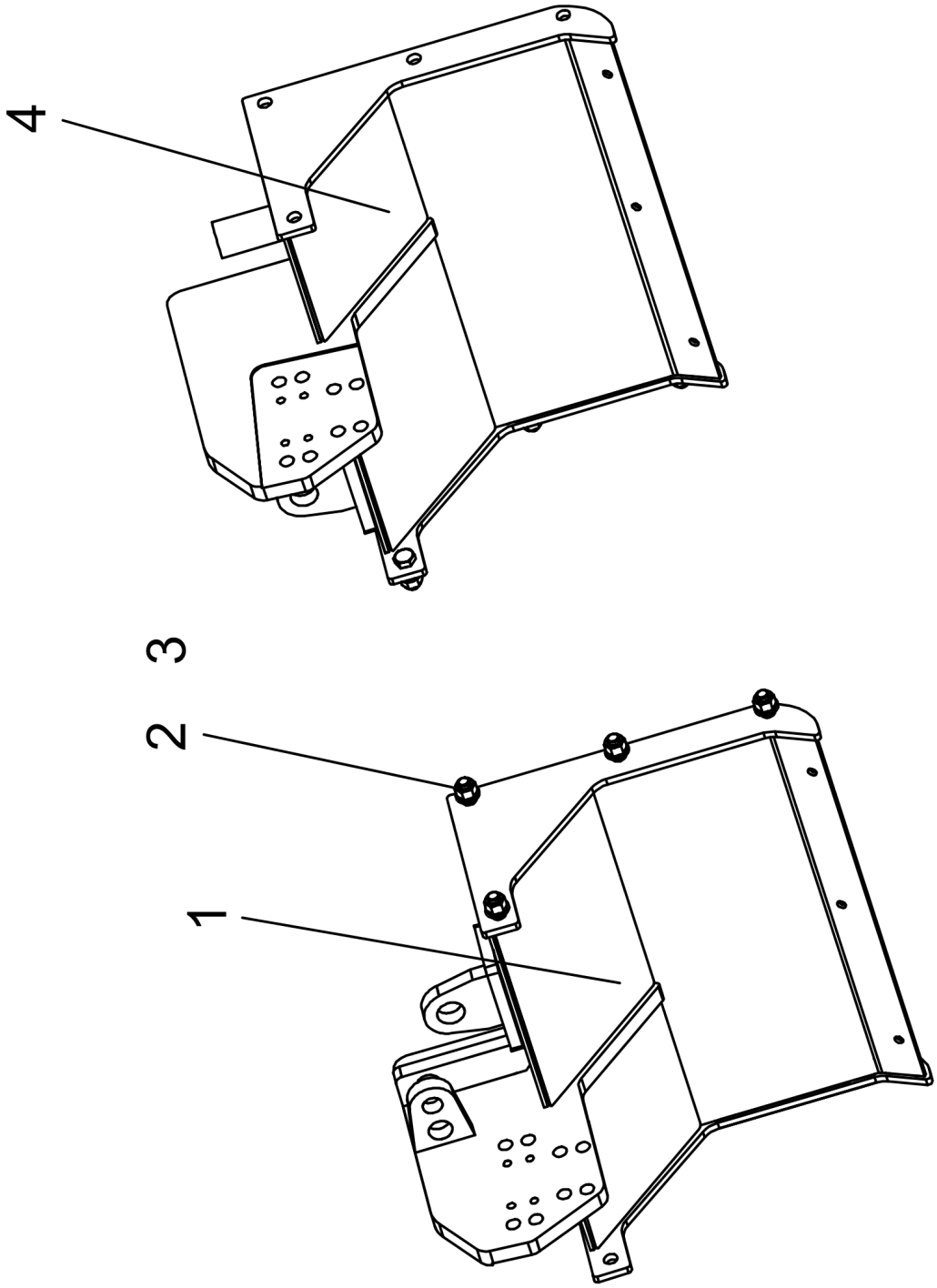

Item	Part No.	Name	Qty	L	SN INFO
1	4812203832	Left striker plate 640mm	1		
2	5730007616	Hexagon nut	8		
3	D939776124	Washer	8		
4	0147147803	Screw M16 x 45	8		

Auger, assembly Auger, assembly

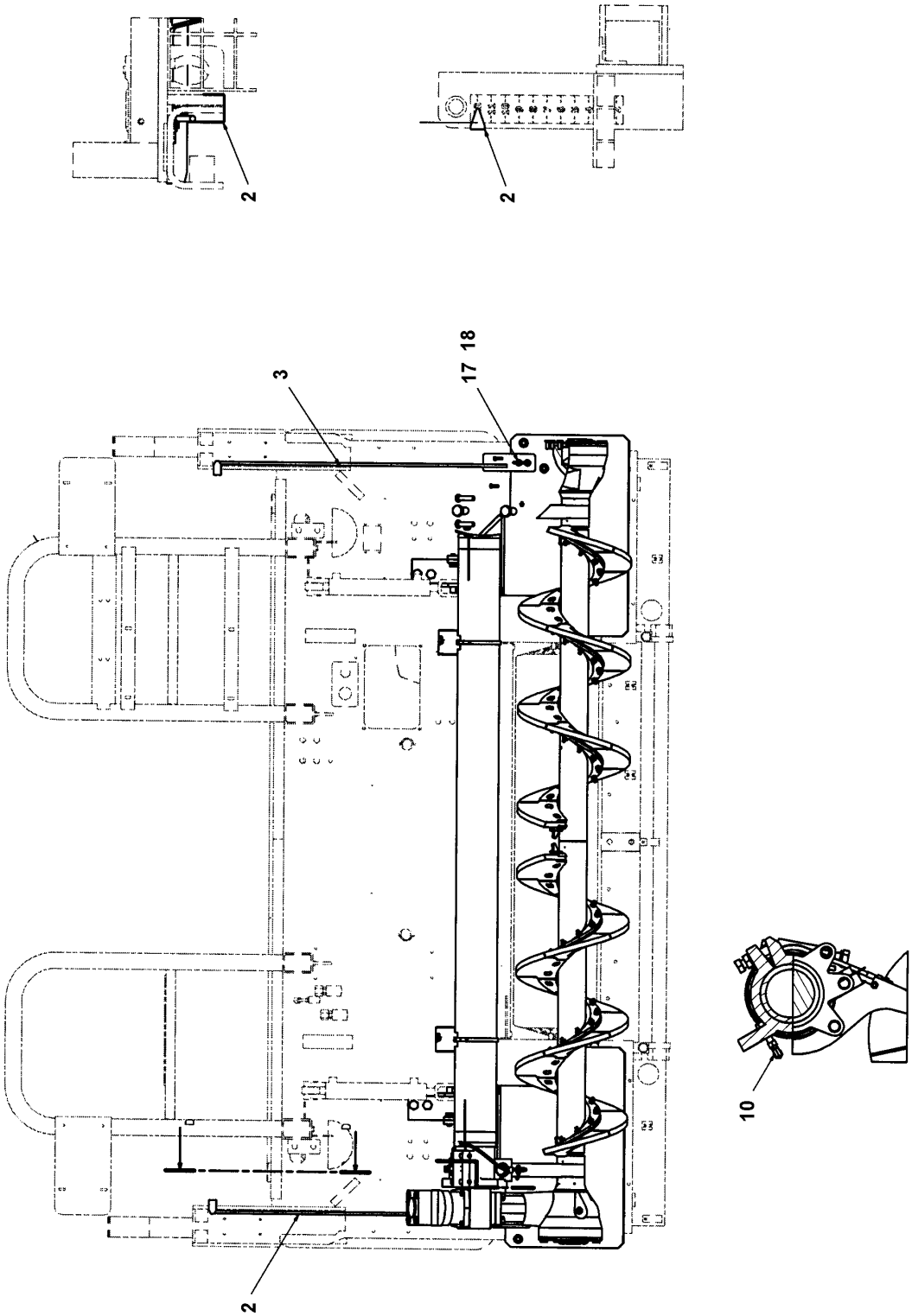

Item	Part No.	Name	Qty	L	SN INFO
1		Auger assembly without flight	1		
2	4812223799	Auger, height gauge, left	1		
3	4812223803	Auger, height gauge, right	1		
4	4812223810	Auger splash weldment, left	1		
5	4812223804	Auger splash weldment, right	1		
6	4812223794	Auger slide bushing	2		
7	4812223795	Bushing, bolt	6		
8	4812223796	Clamping bar	2		
9		Hose retention	2		
10		Auger lubrication	1		
11	4812200130	Loop flushing kit	1		
13	D939570522	Washer	2		
14	4812223993	Nut	2		
15	4749901853	Washer	12		
16	5540164900	Hexagon nut	6		
17	5730082735	Hexagon head screw	4		
18	0300013047	Flat washer	4		
19	D939776124	Washer	10		
20	4812223995	Screw	2		
21	4812223996	Screw	6		
22	4812241339	Wear plate RH	15		
23	4812241337	Wear plate LH	15		
24	4812245547	Bolt	4		
25	4812245546	Bolt	56		
26	4812241444	Adapter, straight	4		
27	4812200081	Elbow, 06-04	2		
28	4812244891	Wear segment, LH	15		
29	4812244890	Wear segment, RH	15		
30	0291118549	Hexagon nut	60		
31	4812246214	Support	2		
32	5540127900	Hexagon head screw	4		
33	5730007580	Hexagon nut, M16 A2K	4		
34	D937860060	Plug screw	4		

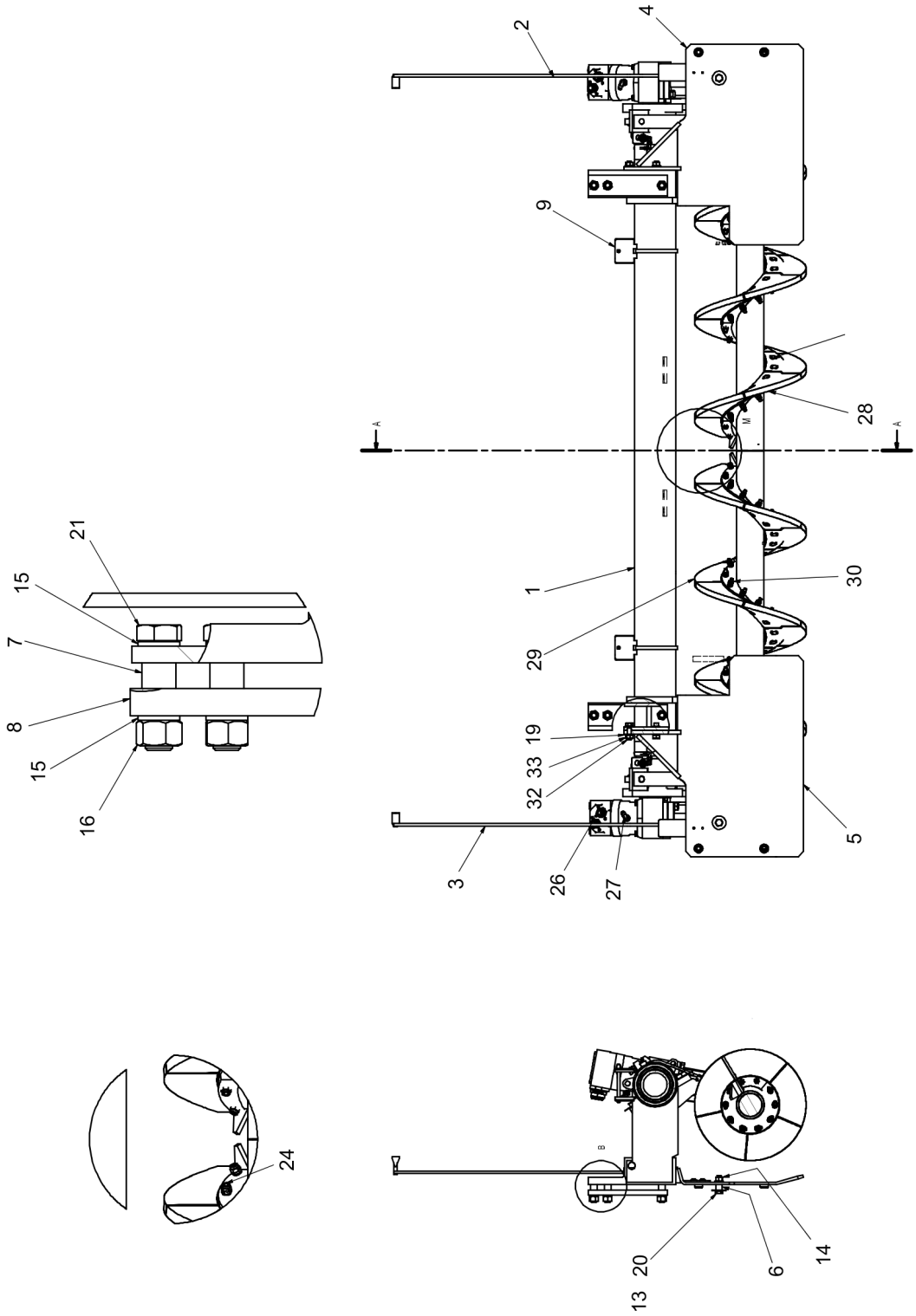
2
4
9
28
A
A
21
15
7
8
15
16
1
29
30
19
33
32
3
26
27
5
24
20
13
6
14

This page intentionally left blank

4812246868 Auger assembly without flight Auger assembly without flight

NO DRAWING AVAILABLE FOR THIS BOM

Item	Part No.	Name	Qty	L	SN INFO
1	D722180000	Auger, compl.	1		
2		Plate, auger mount	2		
3		Gusset, auger	2		

D722180000 Auger D722180000 Auger

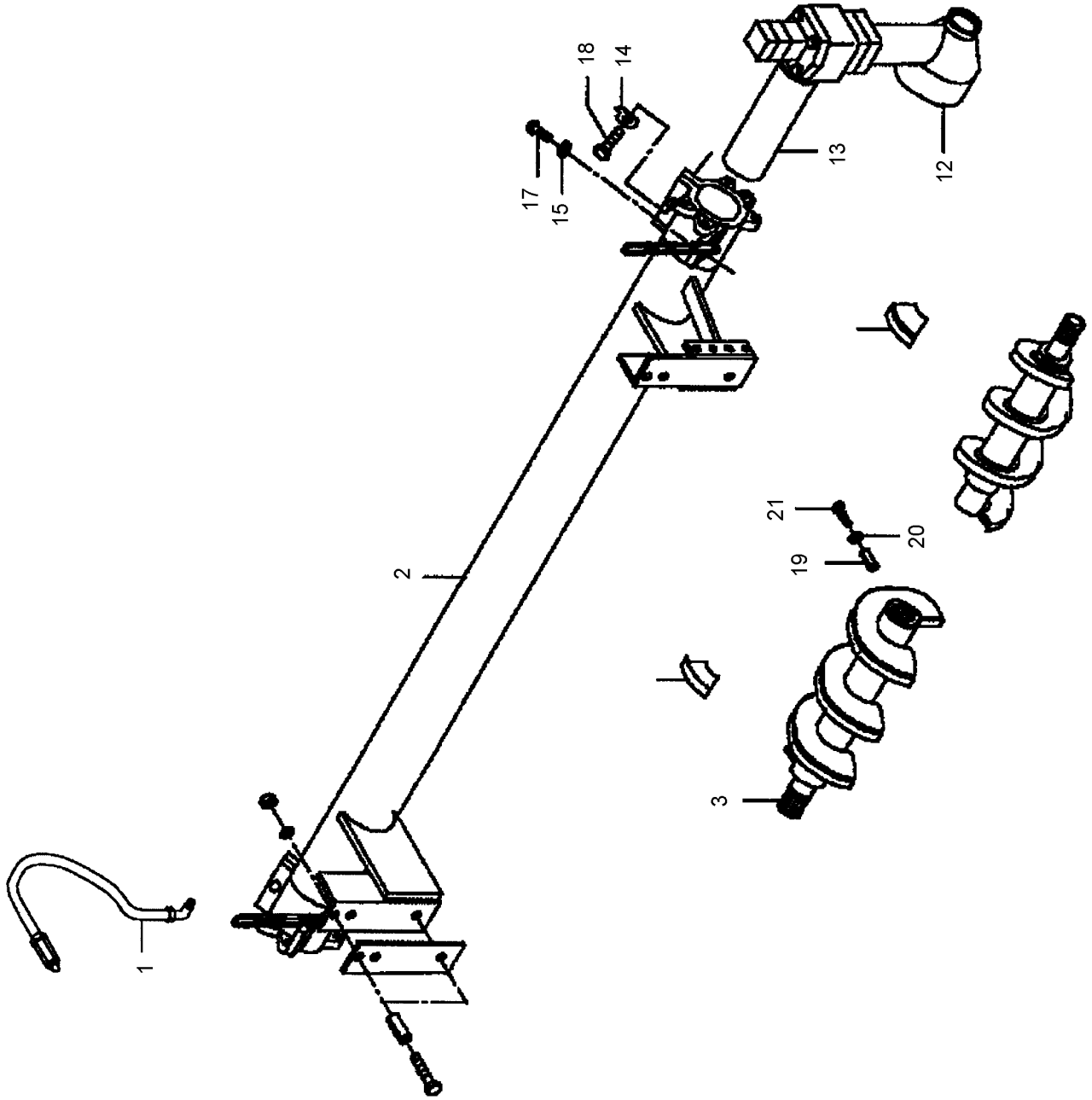

Item	Part No.	Name	Qty	L	SN INFO
1	D754111500	Pipeline, grease, auger	1		
2	D722180900	Distributor support	1		
3	D722181600	Auger	1		
12	D756183300	Auger gear	2		
13	D722183400	Engine support	1		
14	D936780017	Locking plate	4		
15	0301237800	Plain washer(A) 17 x 30 x 3	4		
16	0147148117	Hexagon head screw	2		
17	0147148012	Hexagon head screw	2		
18	0147163003	Screw din933	4		
19	D880180062	Clamping piece	2		
20	D880180063	Lower washer	2		
21	0147136203	Hex. head screw M10 x 25	2		

D722180000 Auger D754111500 Pipeline, grease, auger

NO DRAWING
AVAILABLE
FOR THIS BOM

Item	Part No.	Name	Qty	L	SN INFO
1	D961936205	Elbow union	2		
2	D754180506	Grease pipeline, left	1		
3	D961134205	Screwing	2		
4	D960993190	Intermediate piece	2		
5	D960969150	Hose mounting	2		
6	D935513220	Grease nipple	2		
7	D754180516	Grease pipeline, right	1		

D722180000 Auger D722181600 Auger

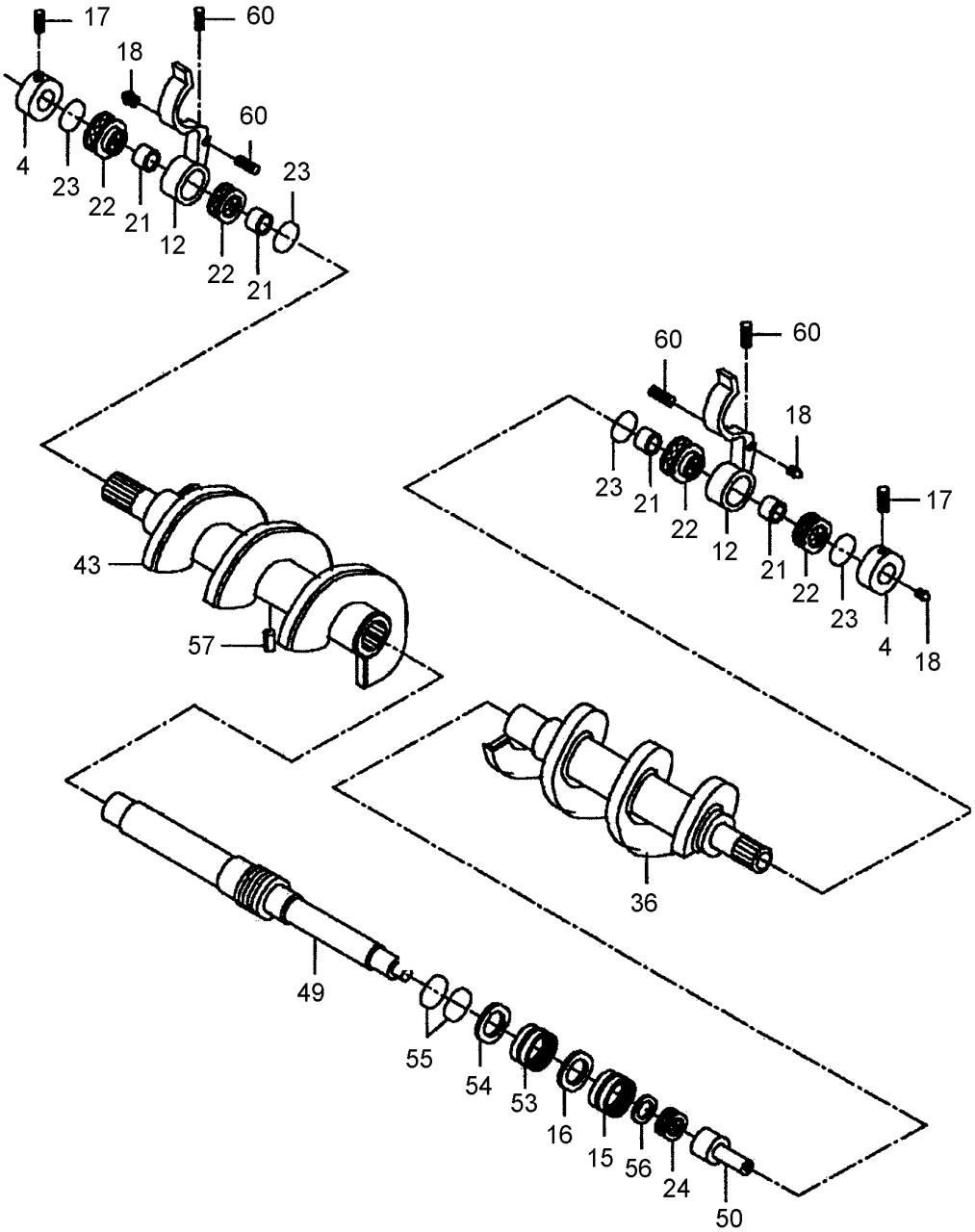

Item	Part No.	Name	Qty	L	SN INFO
4	D722181611	Stop	4		
12	4812246214	Support	2		
15	D935194411	Bearing	1		
16	4812040159	Ring	1		
17	0196124700	Threaded pin	8		
18	D935511210	Grease nipple	3		
21	D935128427	Internal ring	4		
22	D935183934	Bearing	4		
23	D932211701	O-ring	4		
24	D935022420	Roller bearing	1		
36	D722181636	Auger, left	1		
43	D722181643	Auger right	1		
49	D880180749	Shaft	1		
50	D722181750	Bushing	1		
53	D935194413	Bearing	1		
54	4812040158	Ring	1		
55	D932211691	O-ring	2		
56	0324155212	Adjusting washer	0		
56	0324155213	Adjusting washer	0		
56	0324155224	Adjusting washer	0		
57	0106636900	Grooved pin	1		
60	D937860060	Plug screw	4		

D722180000 Auger D756183300 Auger gear

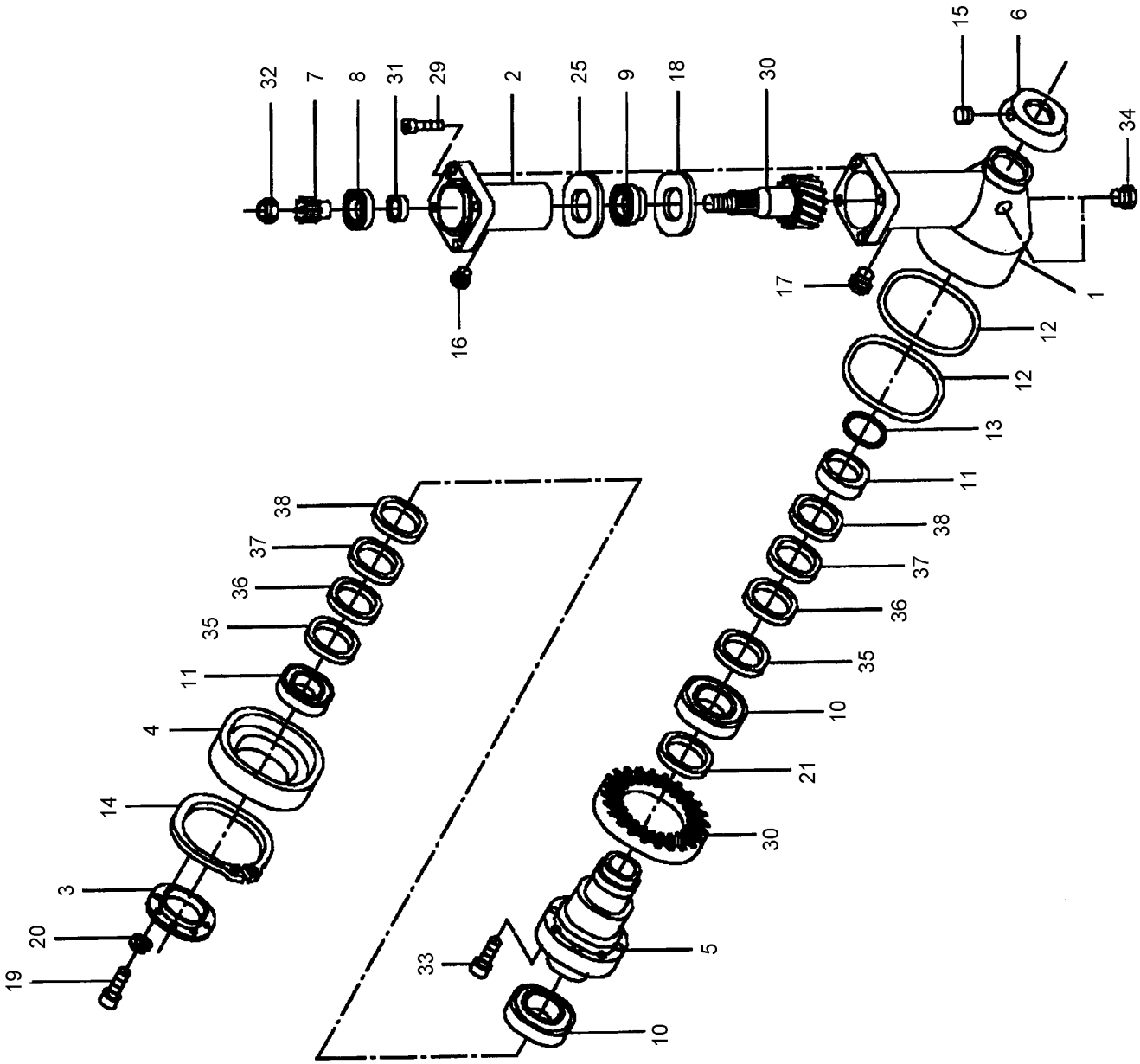

Item	Part No.	Name	Qty	L	SN INFO
1	D756183201	Housing, outer part	1		
2	D756061106	Housing	1		
3	D880180413	Cover	1		
4	D756183315	Housing cover	1		
5	D756183218	Hub	1		
6	D880180419	Sealing washer	1		
7	D756061136	Drive sleeve	1		
8	D935229706	Taper roller bearing	1		
9	D935229705	Conical roller bearing	1		
10	4700116037	Conical roller bearing	2		
11	D936630040	Radial sealing	2		
12	D932211813	O-ring	2		
13	D932211662	O-ring	1		
14	D936032392	Circlip ring	1		
15	0196124700	Threaded pin	1		
16	D937860264	Plug screw	1		
17	D937860060	Plug screw	2		
18	D930206202	Nilosring	1		
19	0147124703	Screw M6 x 20	6		
20	0333310045	Schnorr-lock washer	6		
21	0324155217	Adjusting washer	X		
21	0324155229	Adjusting washer	X		
21	0324155230	Adjusting washer	X		
21	0324155218	Adjusting washer	X		
25	0324155059	Adjusting washer	X		
25	0324155060	Adjusting washer	X		
25	0324155240	Adjusting washer	X		
25	0324155061	Adjusting washer	X		
29	0211132503	Hex sock. screw M8 x 25	2		
30	D951260300	Wheel set	1		
31	D930435011	Compressing socket	1		
32	D938481615	Nut	1		
33	D930452560	Screw	8		
34	D937890151	Plug screw	2		
35	D880180480	Shim 0,1 mm	X		
36	D880180481	Shim 0,3 mm	X		
37	D880180482	Shim 0,5 mm	X		

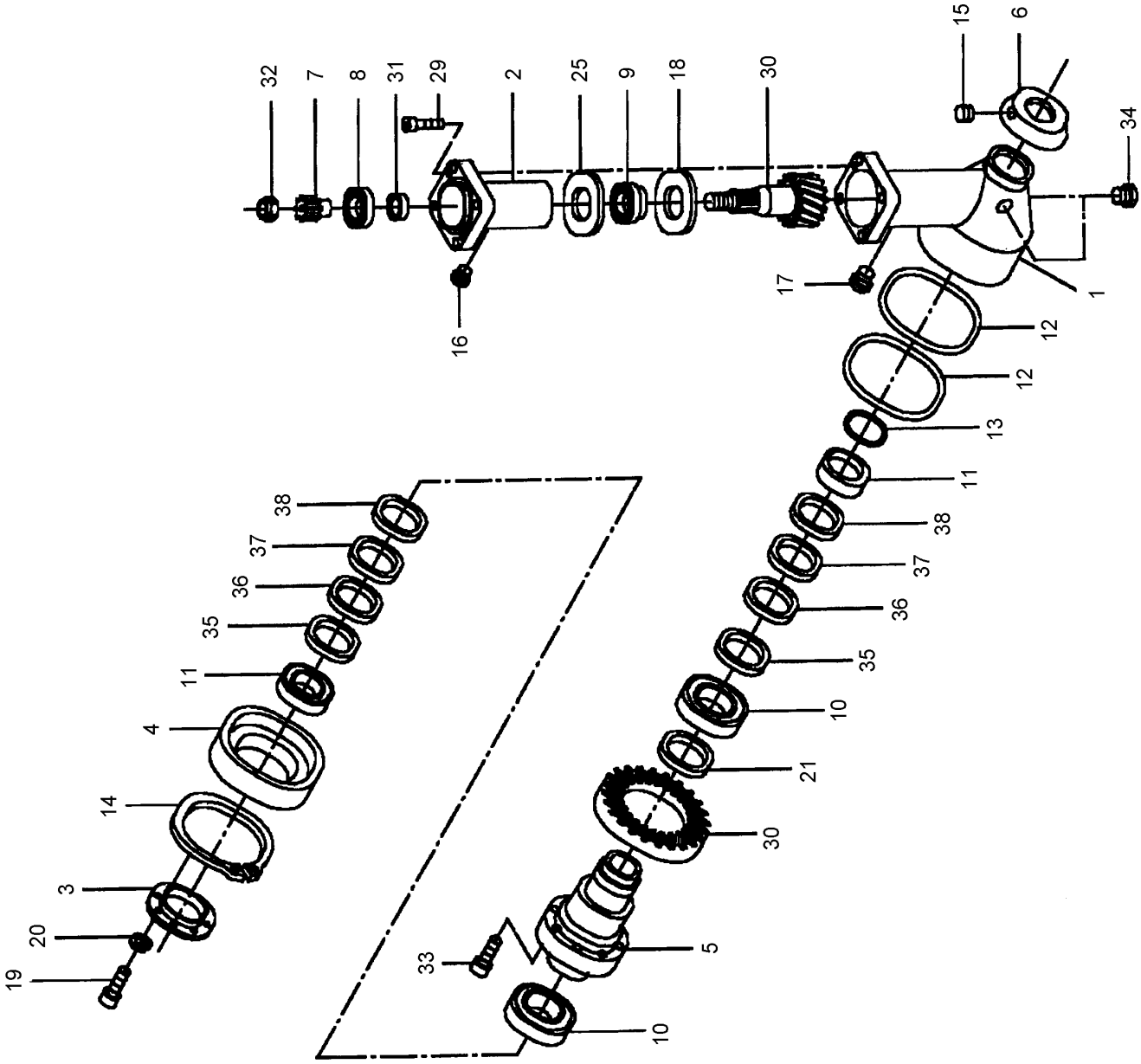
32
7
8
31
29
2
25
9
18
30
15
6
34
1
16
17
12
12
13
11
38
37
36
35
10
21
30
5
10
33
38
37
36
35
11
4
14
3
20
19

Item	Part No.	Name	Qty	L	SN INFO
38	D880180483	Shim 1,0 mm	X		

D722180000 Auger D722183400 Engine support

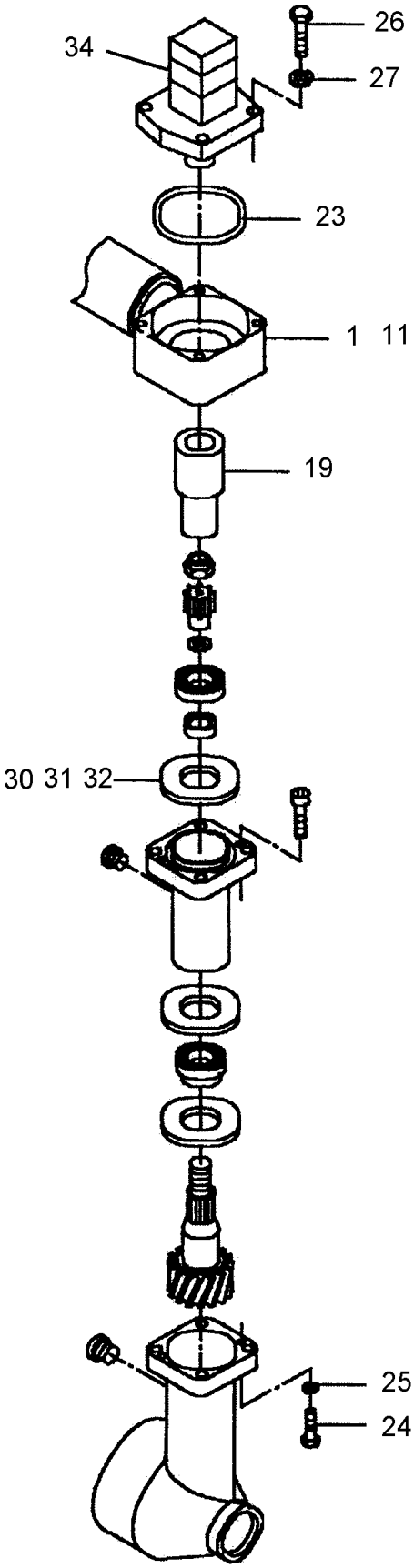

Item	Part No.	Name	Qty	L	SN INFO
1	D722183403	Gear unit bearing, left	1		
11	D722183411	Gear unit bearing, right	1		
19	4812040997	Profile sleeve	2		
23	D932211745	O-ring	2		
24	0147151710	Hexagon head screw	8		
25	0333317415	Schnorr-lock washer	8		
26	0147140303	Hexagon bolt	8		
27	0333310043	Schnorr-lock washer	8		
30	D880180421	Distance washer	0		
31	D880180422	Distance washer	0		
32	D880180423	Distance washer	0		
34	D966057210	Hydraulic motor	2		

Auger, assembly Hose retention, assembly

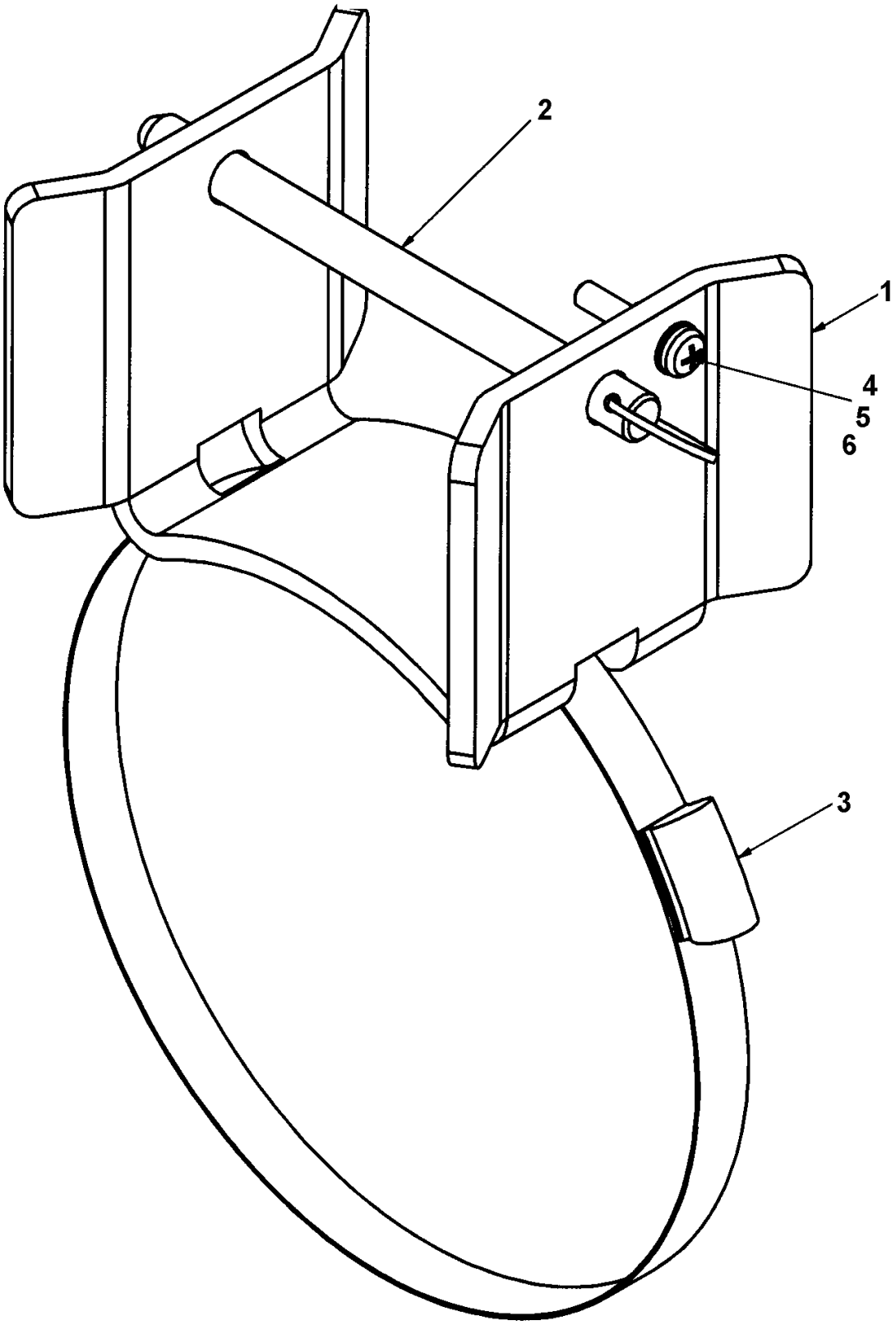

Item	Part No.	Name	Qty	L	SN INFO
1	4812223797	Auger hose bracket	1		
2	D717091020	Quick release pin	1		
3	D717091021	Clamp, hose	1		
4	D936750333	Screw	1		
5	0300013029	Flat washer	2		
6	0266210700	Nut	1		

4812204811 Outboard auger 4812204760 Outboard auger

NO EXPLODED VIEW
AVAILABLE
FOR THIS BOM

Item	Part No.	Name	Qty	L	SN INFO
1	4812200385	Hose assembly	4		
2	4812200513	Hose assembly	2		

4812204088 Hydraulic tunnel assembly 4812204088 Hydraulic tunnel assy

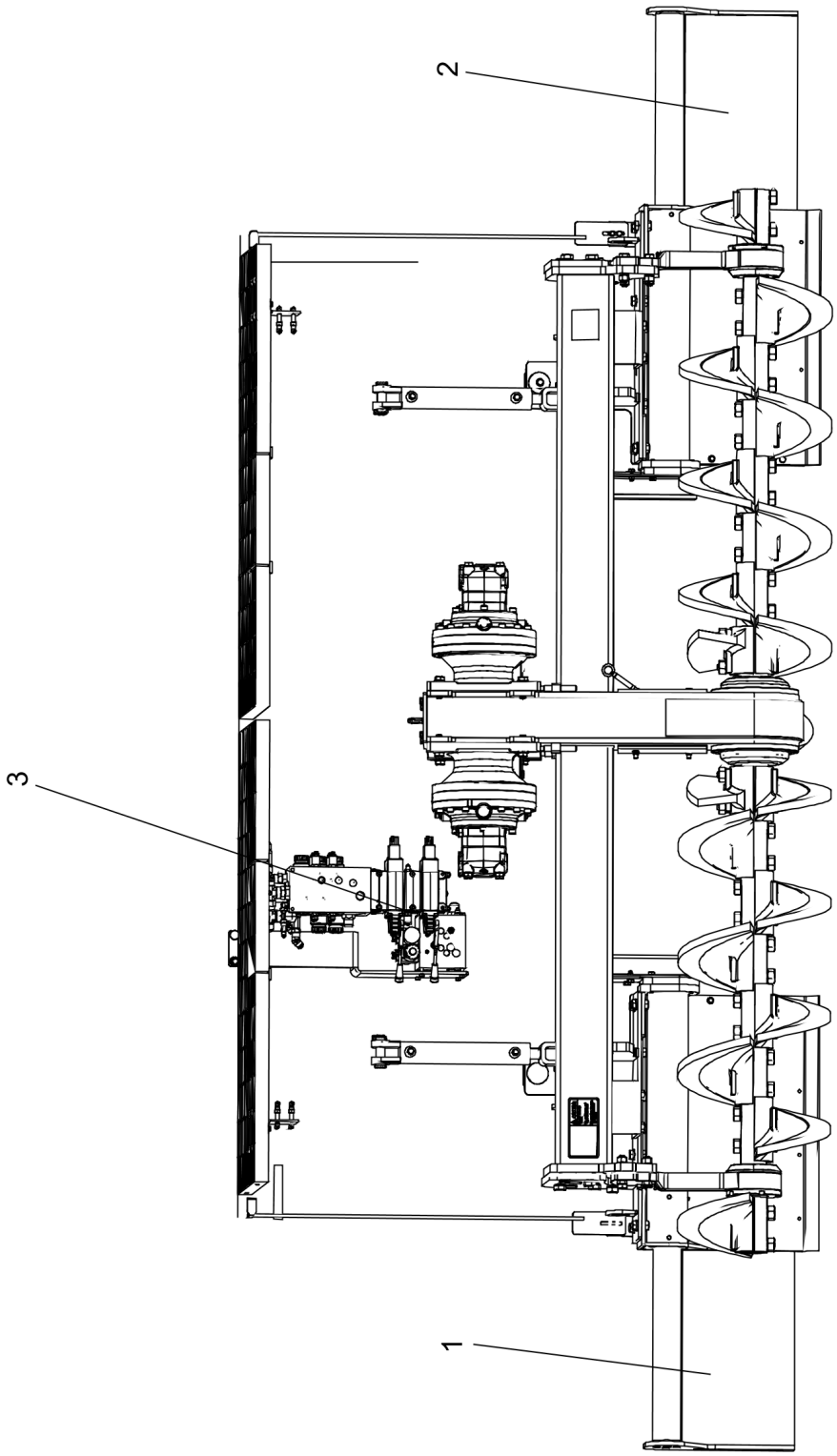

Item	Part No.	Name	Qty	L	SN INFO
1	4812204089	Left hydraulic tunnel assy	1		
2	4812204090	Right hydraulic tunnel assy	1		
3	4812204581	F1000 tunnel option hydrl. kit	1		

4812204088 Hydraulic tunnel assembly 4812204089 Left hydraulic tunnel assy

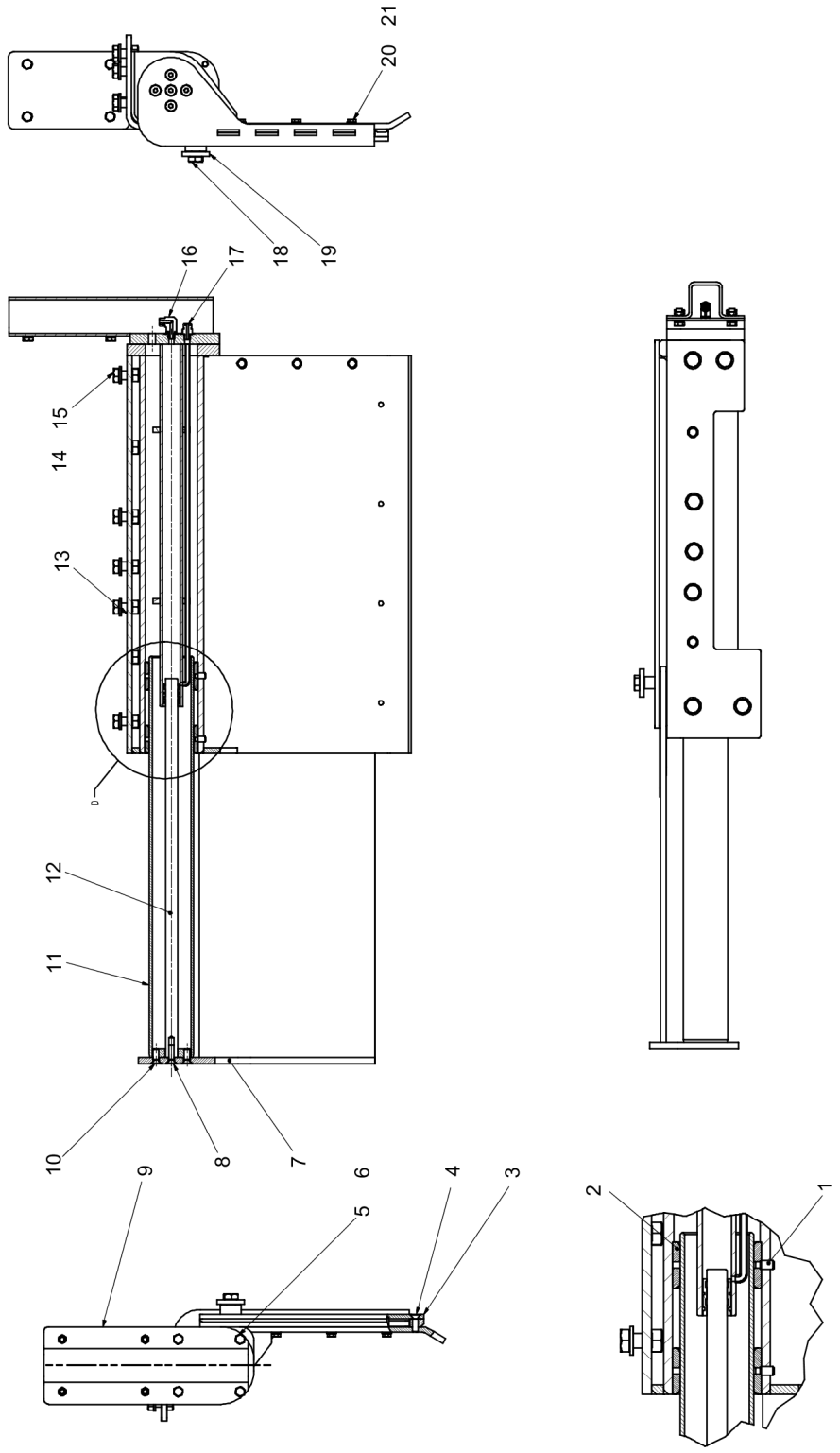

Item	Part No.	Name	Qty	L	SN INFO
1	0192136000	Thread pin	4		
2	4812249496	Self-lubricating bearing	2		
3	4812204106	Left protect plate weldment	1		
4	216110016	Countersunk screw	4		
5	0147136712	Hexagon head screw	4		
6	4749901807	Washer	4		
7	4812204096	Left extension plate weldment	1		
8	3370044501	Countersunk screw	1		
9	4812203745	Oil tube plate assembly	1		
10	0216195773	Countersunk screw	4		
11	4812204113	Telescopic sliding weldmnet	1		
12	4812204111	Hydraulic tunnel cylinder	1		
01	4812313428	4812204111 Seal kit	1		
13	4812204091	Left sliding sleeve weldment	1		
14	4749901853	Washer	7		
15	0147147603	Screw M16x 35	7		
16	4700792334	Elbow 90 orfs	1		
17	4700791744	Adapter	1		
18	0147147503	Hex. head screw	1		
19	4749900538	Washer	1		
20	0147132603	Screw DIN933	3		
21	D939776113	Washer	3		

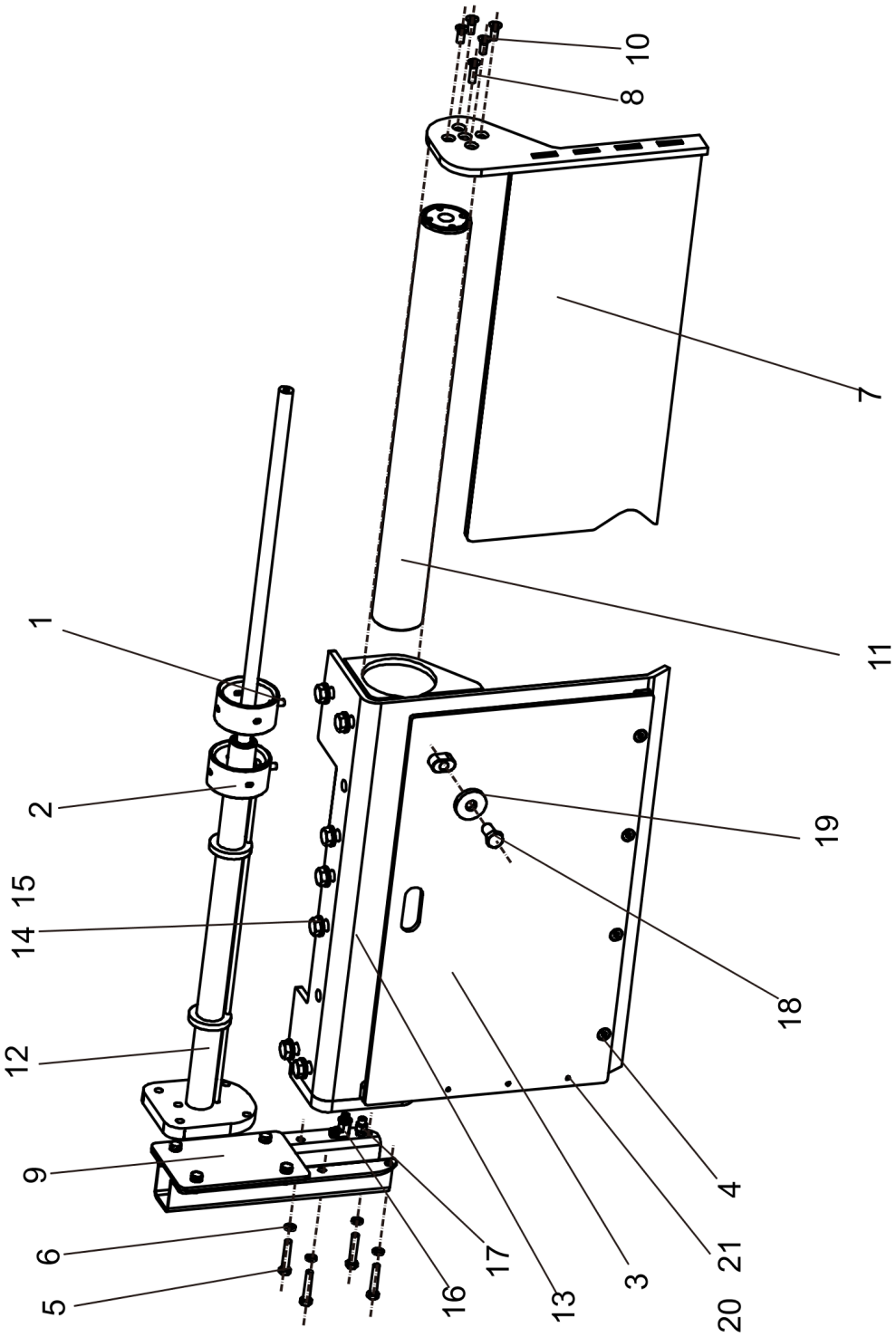
1
2
15
14
12
9
6
5
16
17
13
3
20
21
4
18
19
11
7
8
10

This page intentionally left blank

4812204088 Hydraulic tunnel assembly Oil tube protect plate assembly

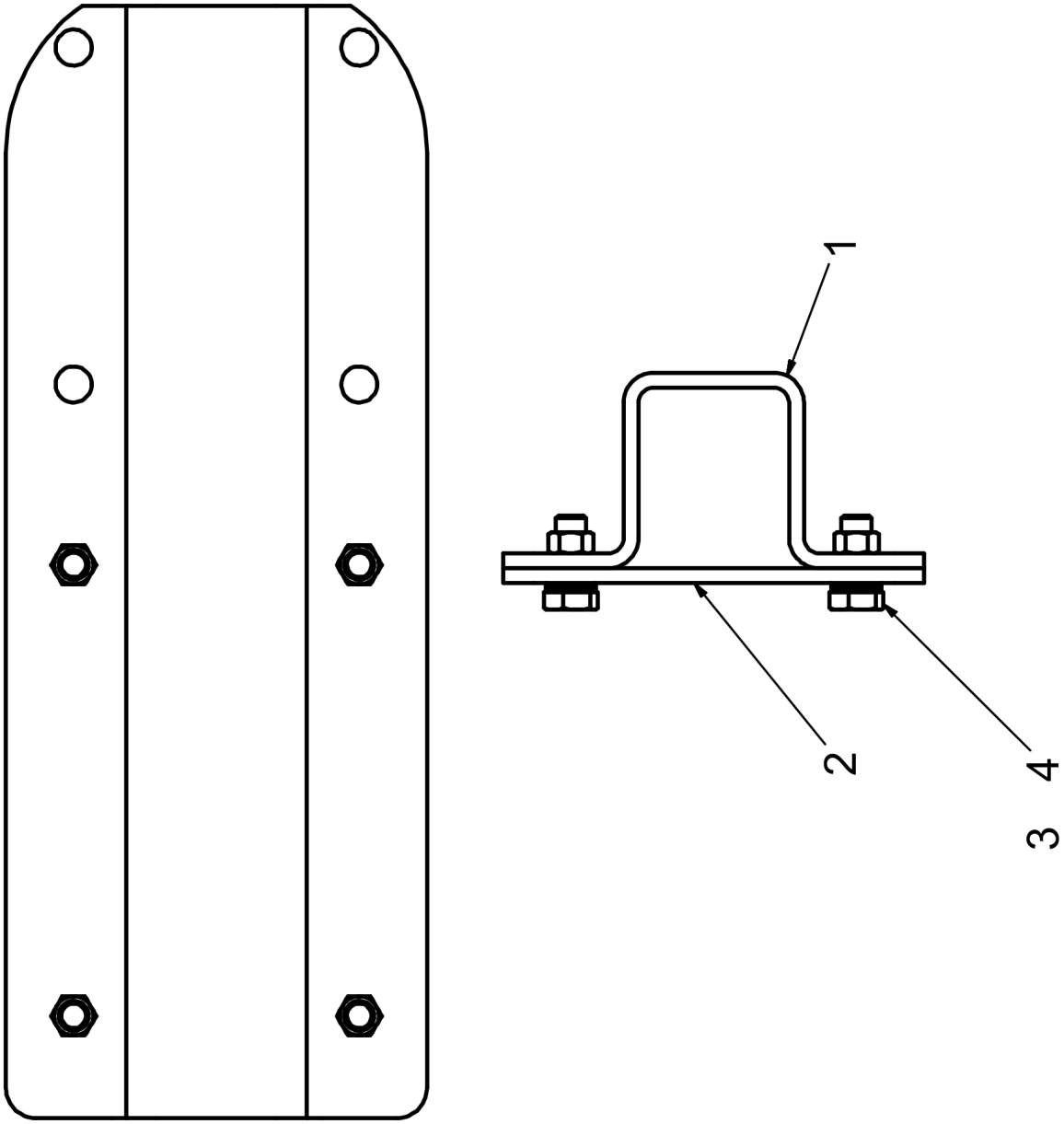

Item	Part No.	Name	Qty	L	SN INFO
1	4812203743	Oil tube protect plate	1		
2	4812246652	Plate	1		
3	D939776113	Washer	4		
4	0147136203	Hex. head screw M10 x 25	4		

4812204088 Hydraulic tunnel assembly 4812204090 Right hydraulic tunnel assy

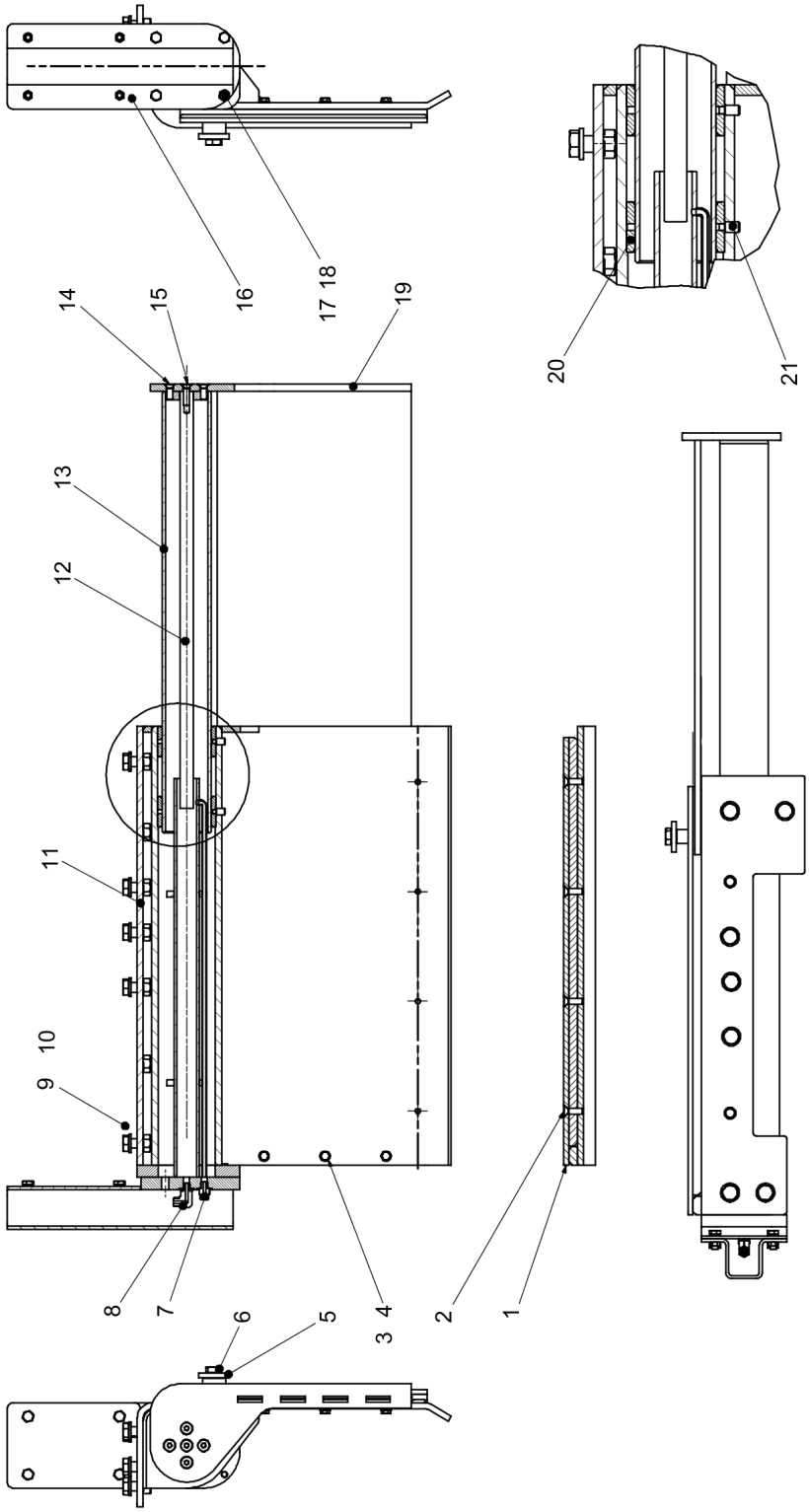

Item	Part No.	Name	Qty	L	SN INFO
1	4812204107	Right protect plate weldment	1		
2	0216110016	Countersunk screw	4		
3	D939776113	Washer	3		
4	0147132603	Screw DIN933	3		
5	4749900538	Washer	1		
6	0147147503	Hex. head screw	1		
7	4700791744	Adapter	1		
8	4700792334	Elbow 90 orfs	1		
9	0147147603	Screw M16x 35	7		
10	4749901853	Washer	7		
11	4812204092	Right sliding sleeve weldment	1		
12	4812204111	Hydraulic tunnel cylinder	1		
01	4812313428	4812204111 Seal kit	1		
13	4812204113	Telescopic sliding weldmnet	1		
14	0216195773	Countersunk screw	4		
15	3370044501	Countersunk screw	1		
16	4812203745	Oil tube plate assembly	1		
17	4749901807	Washer	4		
18	0147136712	Hexagon head screw	4		
19	4812204098	Right extention plate weldment	1		
20	4812249496	Self-lubricating bearing	2		
21	0192136000	Thread pin	4		

4812204088 Hydraulic tunnel assembly 4812204581 F1000 Tunnel option hydrl. kit

NO EXPLODED VIEW
AVAILABLE
FOR THIS BOM

Item	Part No.	Name	Qty	L	SN INFO
1	4812204582	F1000 option hic assy	1		
2	4812204584	Adapter	2		
3	D717800043	Adapter	1		
4	4812223957	Clip, Grating tie down	4		
5	4812204585	Plate	2		
6	4812204586	Adapter	4		
7	5530766300	Hexagon head screw	4		
8	D939776113	Washer	4		
9	5530774600	Hexagon nut	4		
10	4812204588	F1000 tunnel hose kit	1		
11	4812248617	Adapter	4		
12	D717801912	Elbow, 12-12	1		

4812204088 Hydraulic tunnel assembly 4812204582 F1000 Tunnel Option Hic Assy

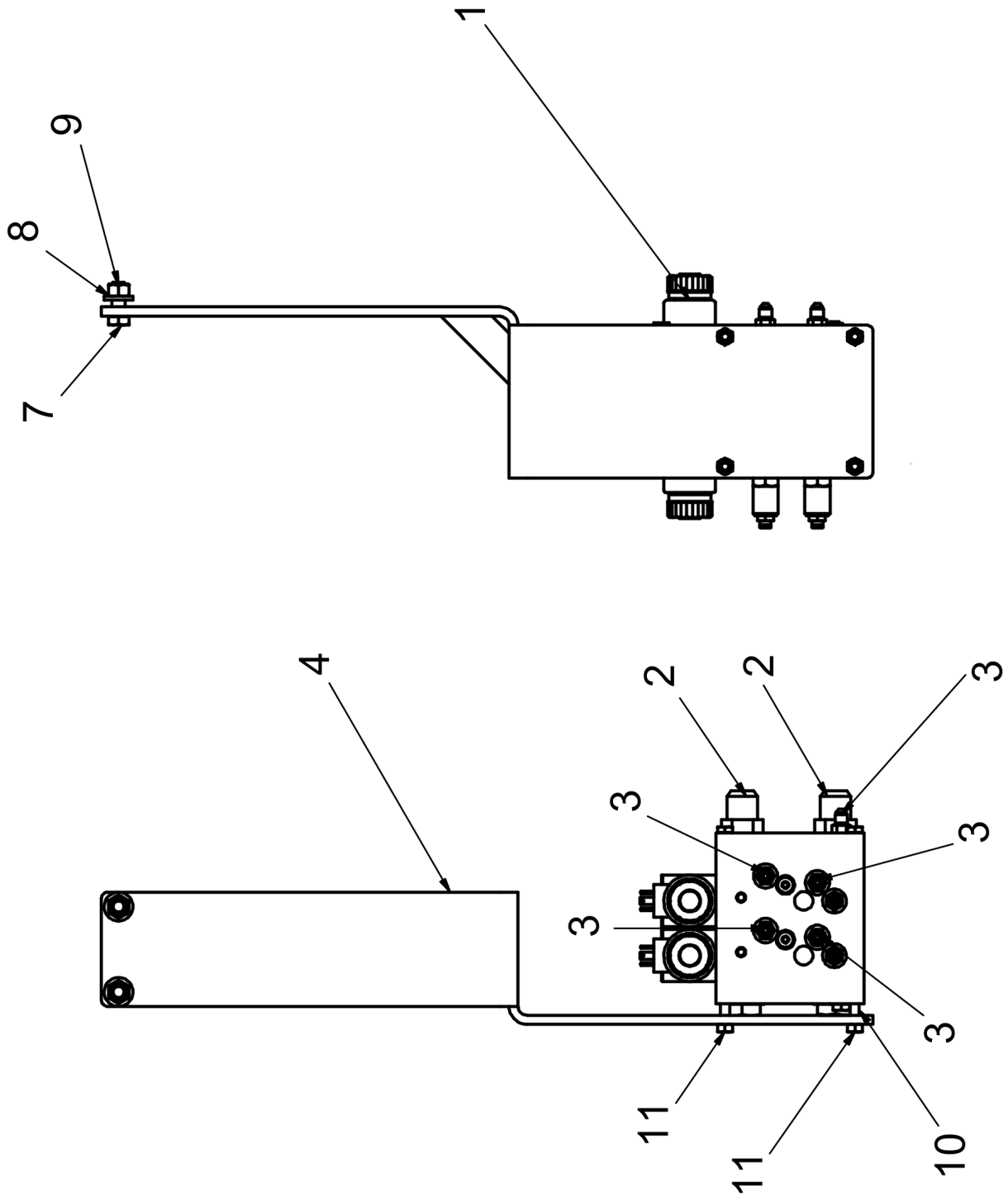

Item	Part No.	Name	Qty	L	SN INFO
1	4812246417	Tunnel option hydrl. hic	1		
2	D717800066	Adapter, 12-12	2		
3	D717800246	Adapter, 04-04	5		
4	4812204587	Support plate weldment	1		
5	D717802304	Hex plug	2		
6	D717802276	External plug, 04	1		
7	0147140103	Hex head screw M12 x 30	2		
8	D939776117	Flat washer	2		
9	0266211200	Hexagon nut M12	2		
10	4812224143	Bolt	4		
11	5530774600	Hexagon nut	4		

4812204088 Hydraulic tunnel assembly 4812204588 F1000 Tunnel hose kit

NO EXPLODED VIEW
AVAILABLE
FOR THIS BOM

Item	Part No.	Name	Qty	L	SN INFO
1	4812204593	Hose	1		
2	4812204594	Hose	1		
3	4812204708	Hose	1		
4	4812204596	Hose	2		
5	4812204597	Hose	2		
6	4812204598	Hose	2		
7	4812204599	Hose	2		

4812204813 Hydraulic tunnel field kit 4812204813 Hydraulic tunnel field kit

NO EXPLODED VIEW
AVAILABLE
FOR THIS BOM

Item	Part No.	Name	Qty	L	SN INFO
1	4812204088	Hydraulic tunnel assembly	1		
2	4812204815	F1000 tunnel harness	1		
3	D717103003	Toggle switch, 7	2		
4	4812204721	Tunnel direction decals	2		

4812204602 Center auger hydraulic kit 4812204602 Center auger hydraulic kit

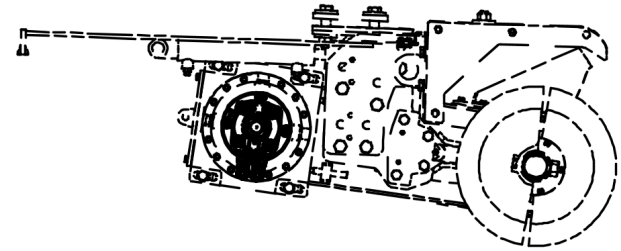

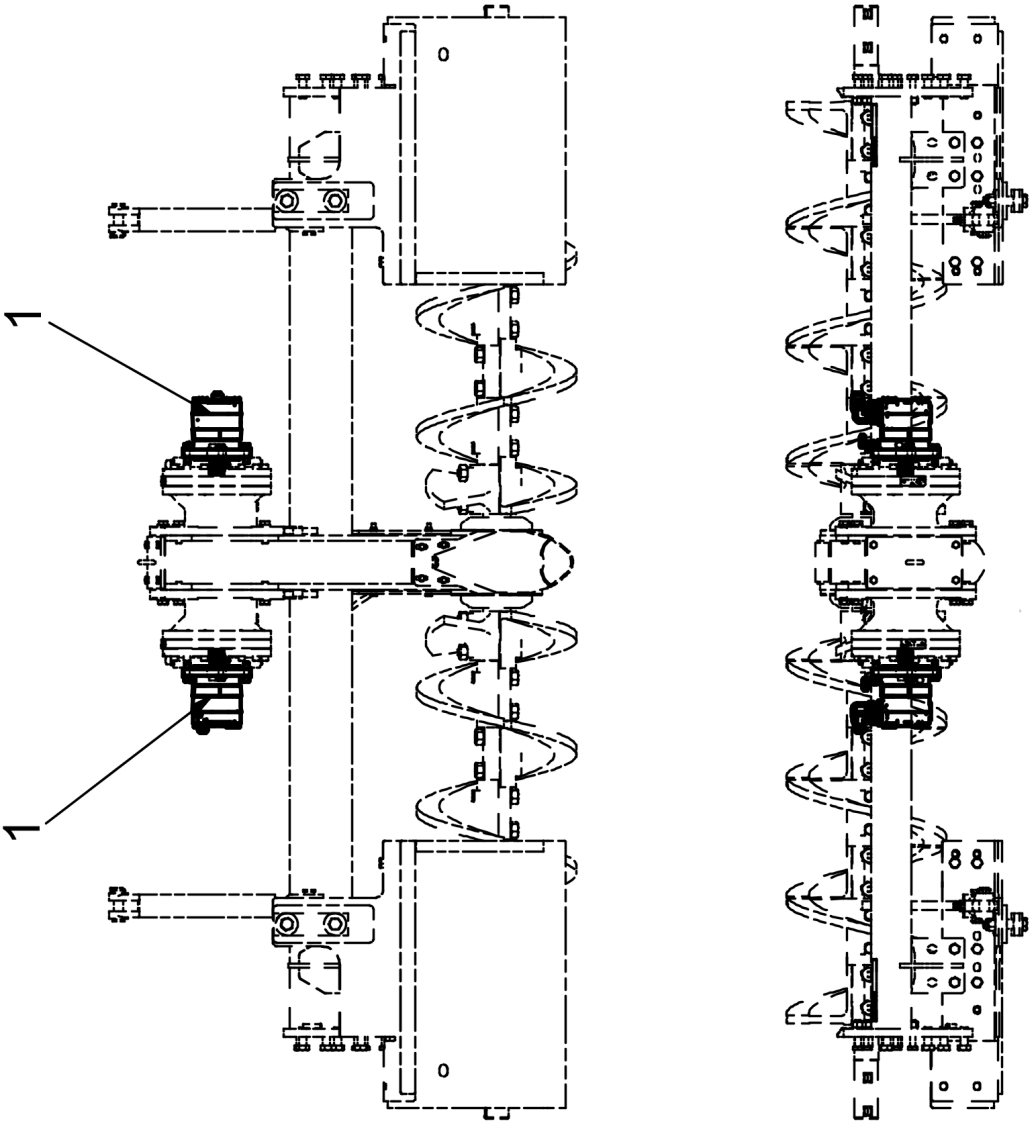

Item	Part No.	Name	Qty	L	SN INFO
1	4812204603	F1000 Central auger motor 200	2		
2	4812204591	F1000 Central auger hose kit	1		

4812204602 Center auger hydraulic kit 4812204603 Central auger motor 200

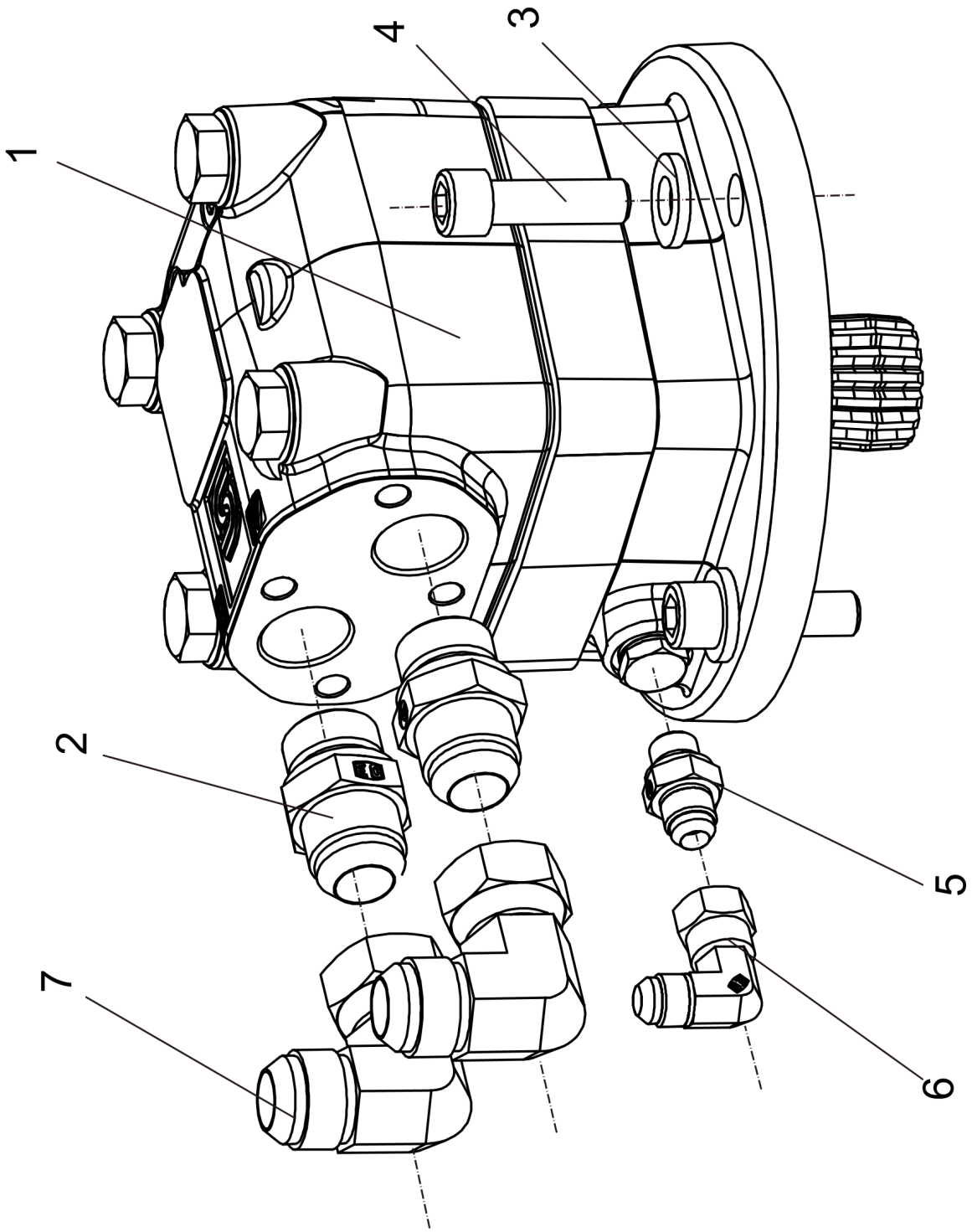

Item	Part No.	Name	Qty	L	SN INFO
1	4812204513	Motor	1		
2	4812241444	Adapter, straight	2		
3	D939776117	Flat washer	4		
4	0211140303	Hex sock. Screw M12 x 40	4		
5	4812204769	Adapter	1		
6	4812204770	Adapter	1		
7	D717801912	Elbow, 12-12	2		

4812222848 Front wheel assist 4812222848 Front wheel assist

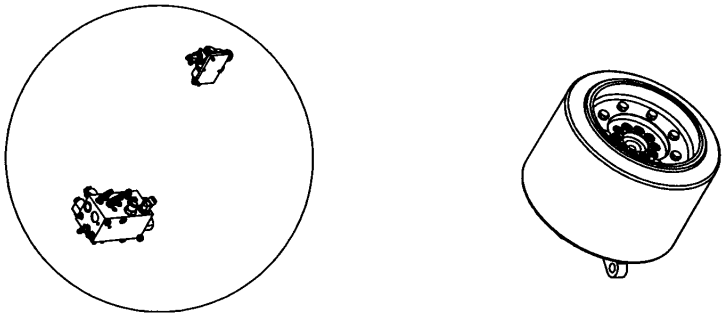

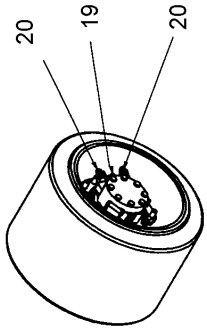

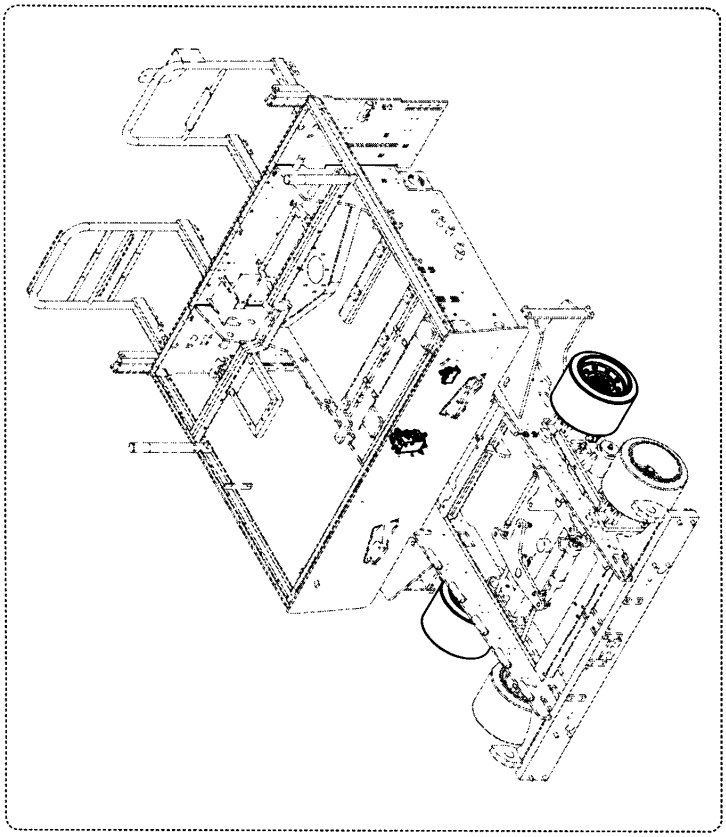

Item	Part No.	Name	Qty	L	SN INFO
1	4812224188	Wheel motor mount, weldment	2		
2	D716031553	Drive wheel, front assembly	2		
3	4812241708	HIC, front wheel assist	1		
4	D716031542	Motor, wheel	2		
5	4812224193	Mount, priority valve	1		
6	4812241709	Valve, steering priority assy	1		
7	4812224194	Adapter plate	2		
8	D939776113	Washer	4		
9	4812223505	Bolt	2		
10	D717800820	Lock nut, M10	2		
11	4812223504	Bolt	2		
12	D939776124	Washer	20		
13	4812224214	Bolt	20		
14	D717801723	HHCS, M10 x 1.5P, 140MM LG	2		
15	4749901853	Washer	32		
16	5540417700	Hexagon head screw	16		
17	4812224215	Lock nut	16		
18	D939776115	Washer	4		
19	4812200058	Straight coupling	2		
20	4812200060	Elbow	4		

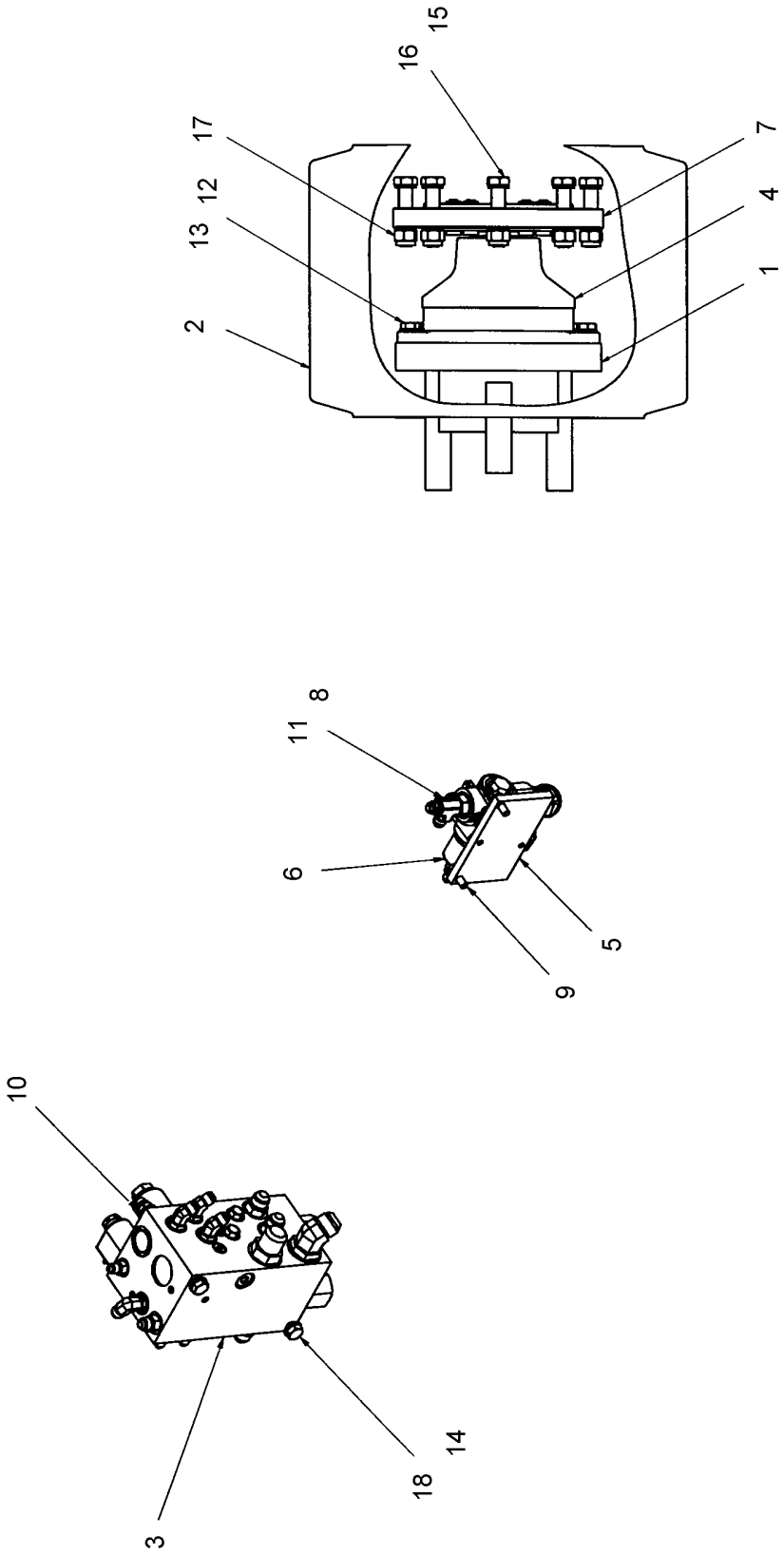
2
13
12
17
16
15
1
4
7
9
6
11
8
5
3
18
14
10

This page intentionally left blank

4812222848 Front wheel assist 4812241708 HIC assy, front wheel assist

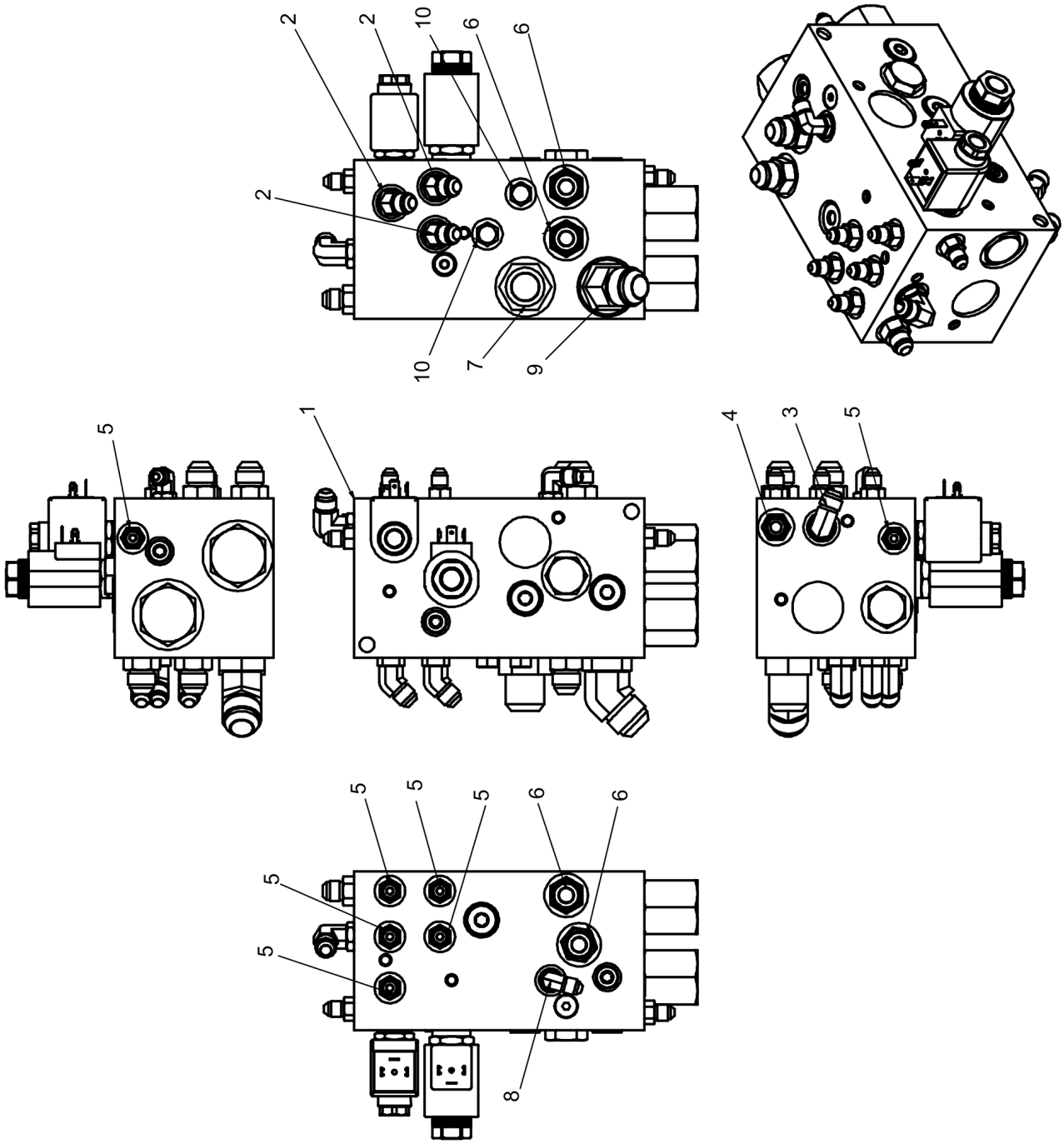

Item	Part No.	Name	Qty	L	SN INFO
1	D716090528	HIC, front wheel assist	1		
2	4812200416	Adapter	3		
3	D717800295	6MORB-6MJ90	1		
4	D717800323	Adapter	1		
5	D717800246	Adapter, 04-04	7		
6	D717800372	Adapter	4		
7	D717800066	Adapter, 12-12	1		
8	D717800029	Adapter, elbow	1		
9	D717800099	Elbow, 12-12, 45 deg	1		
10	D717802276	External plug, 04	2		

4812222848 Front wheel assist 4812241709 Valve assy, steering priori

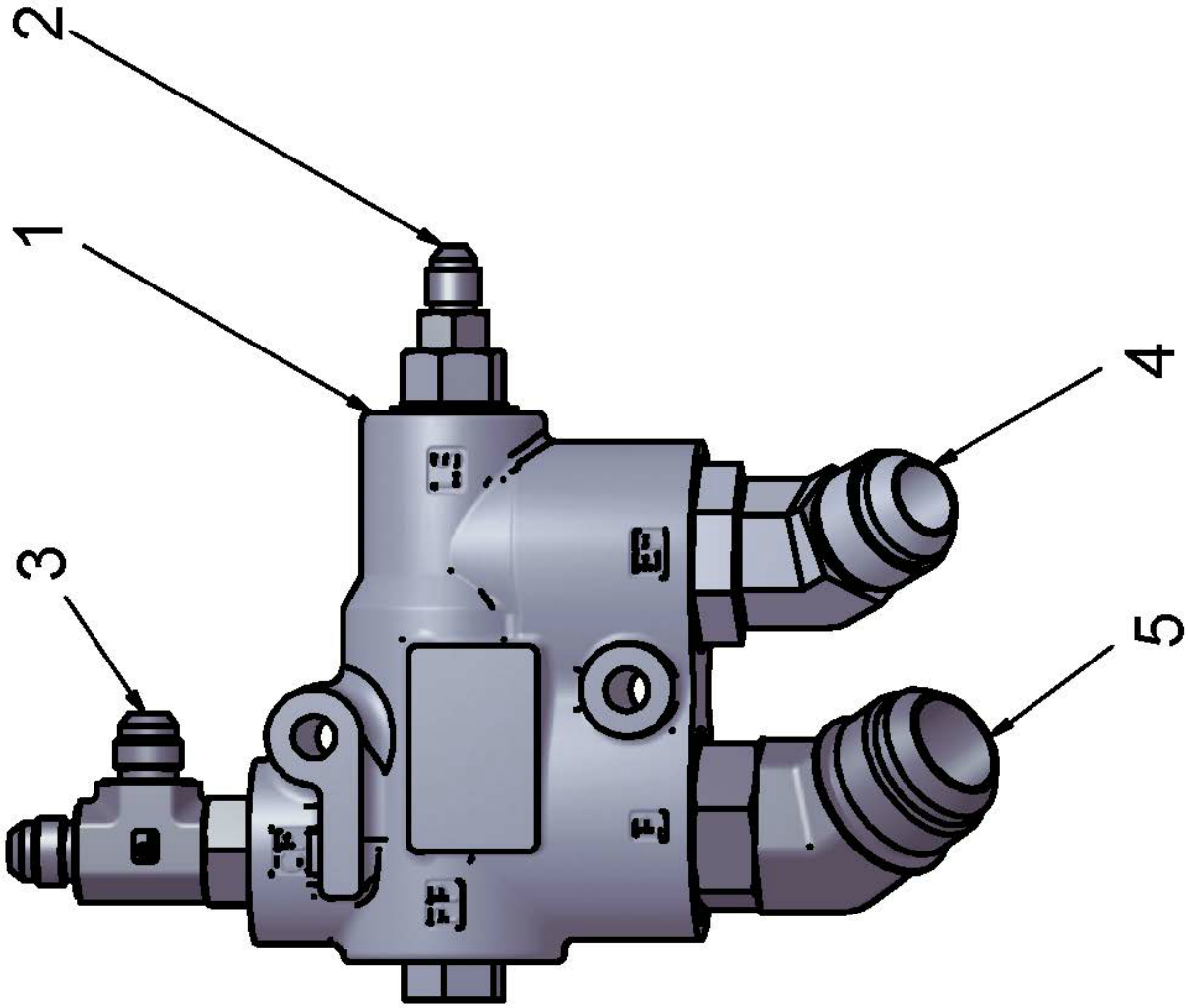

Item	Part No.	Name	Qty	L	SN INFO
1	D716090507	Dyanmic steering valve	1		
2	D717800246	Adapter, 04-04	1		
3	4812200056	Run tee, 06-08-06	1		
4	D717800099	Elbow, 12-12, 45 deg	1		
5	4812200082	Elbow, 16-12	1		

Options 4812222838 Option, Tunnel extensions kit

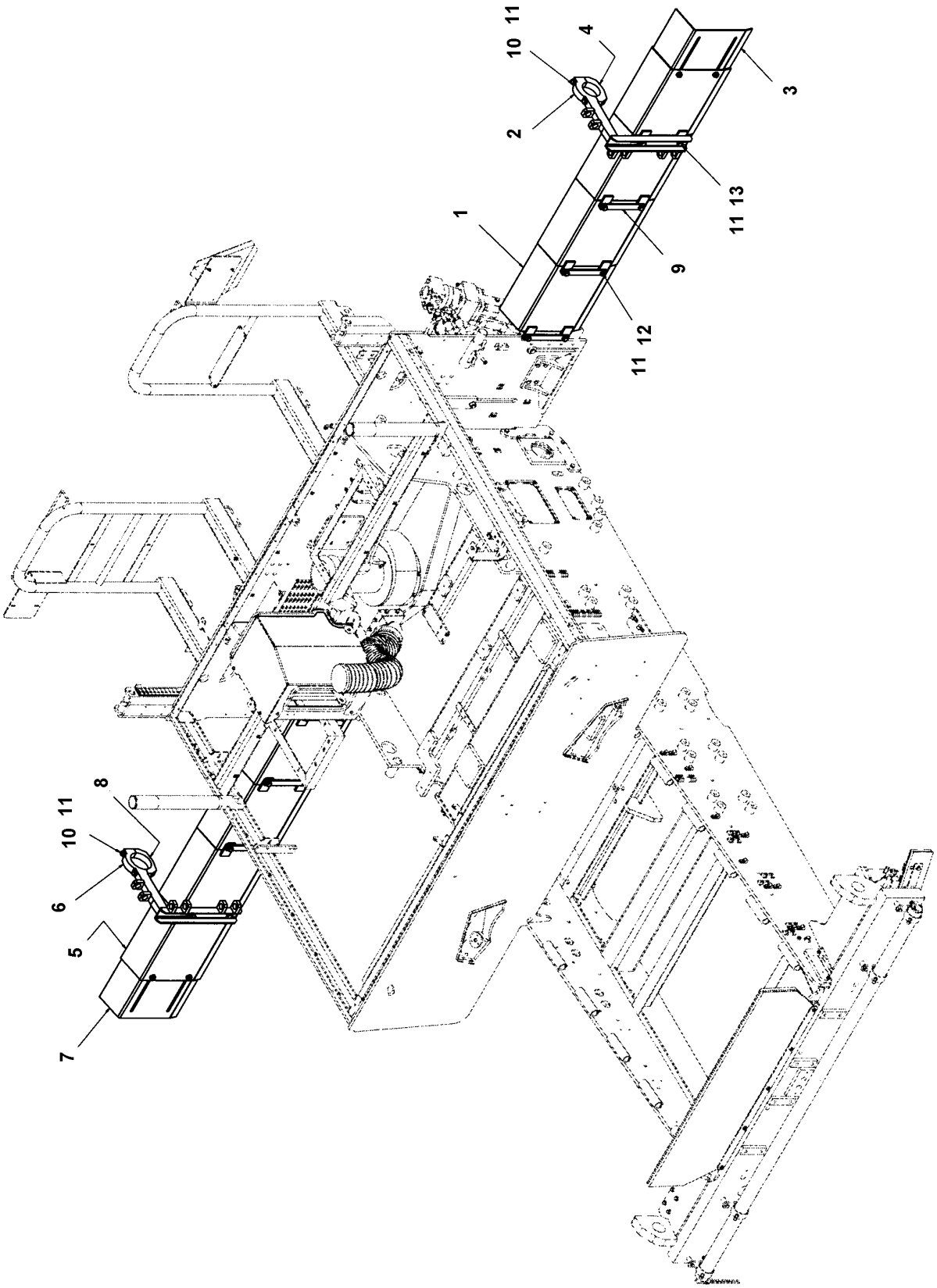

Item	Part No.	Name	Qty	L	SN INFO
1	4812224293	LH, splash extension	4		
2	4812224298	LH, extension support	1		
3	4812224305	LH, auger tunnel	1		
4	4812224304	Clamp, LH extension	1		
5	4812224296	RH, splash extension	4		
6	4812224302	RH, extension support	1		
7	4812224306	RH, auger tunnel	1		
8	4812224308	Clamp, RH extension	1		
9	4812224307	Clamp, extension capture	8		
10	4812224314	Bolt	4		
11	D939776124	Washer	24		
12	5540084600	Hexagon head screw	16		
13	0147147703	Hex head screw M16 x 40	4		

Options D717102501 Leveling control

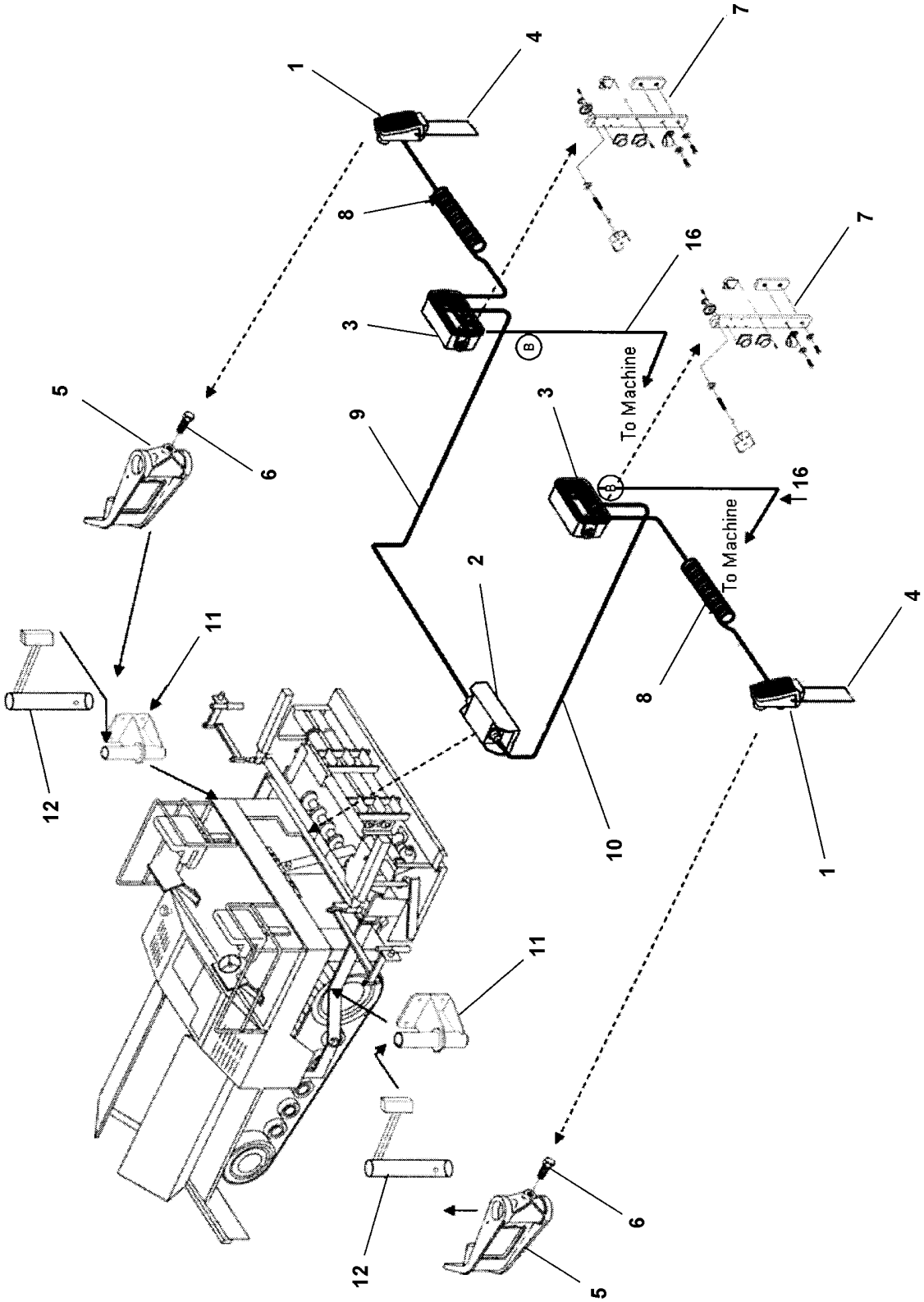

Item	Part No.	Name	Qty	L	SN INFO
1	D717102502	Sonic tracker II	2		
2	D717102503	Slope, dual port	1		
3	D717102504	Box, controller single side base	2		
4	D717102509	Temp baik w/sleeves	2		
5	D717102510	Bracket, sonic tracker	2		
6	D717102511	Kit, sonic tracker	2		
7	4812222564	Controller bracket	2		
8	D717102513	Coil cord 15ft, sonic tracker-controller	2		
9	D717102514	Cable, slope system	1		
10	D717102515	Cable, slope system	1		
11	D717102516	Bracket, short, tom arm mount	2		
12	D717102517	Bracket, l-arm long fin	2		
13	D717102505	Operator manual, leveling controll	1		
15	D717102507	Case	1		
16	D717102508	Cable, controller paver	2		

Options 4812222846 Hand rail assembly

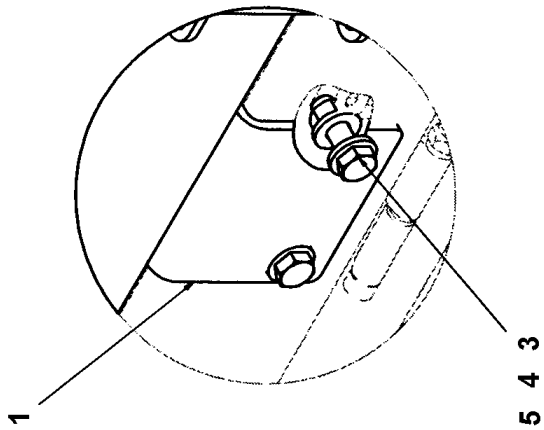

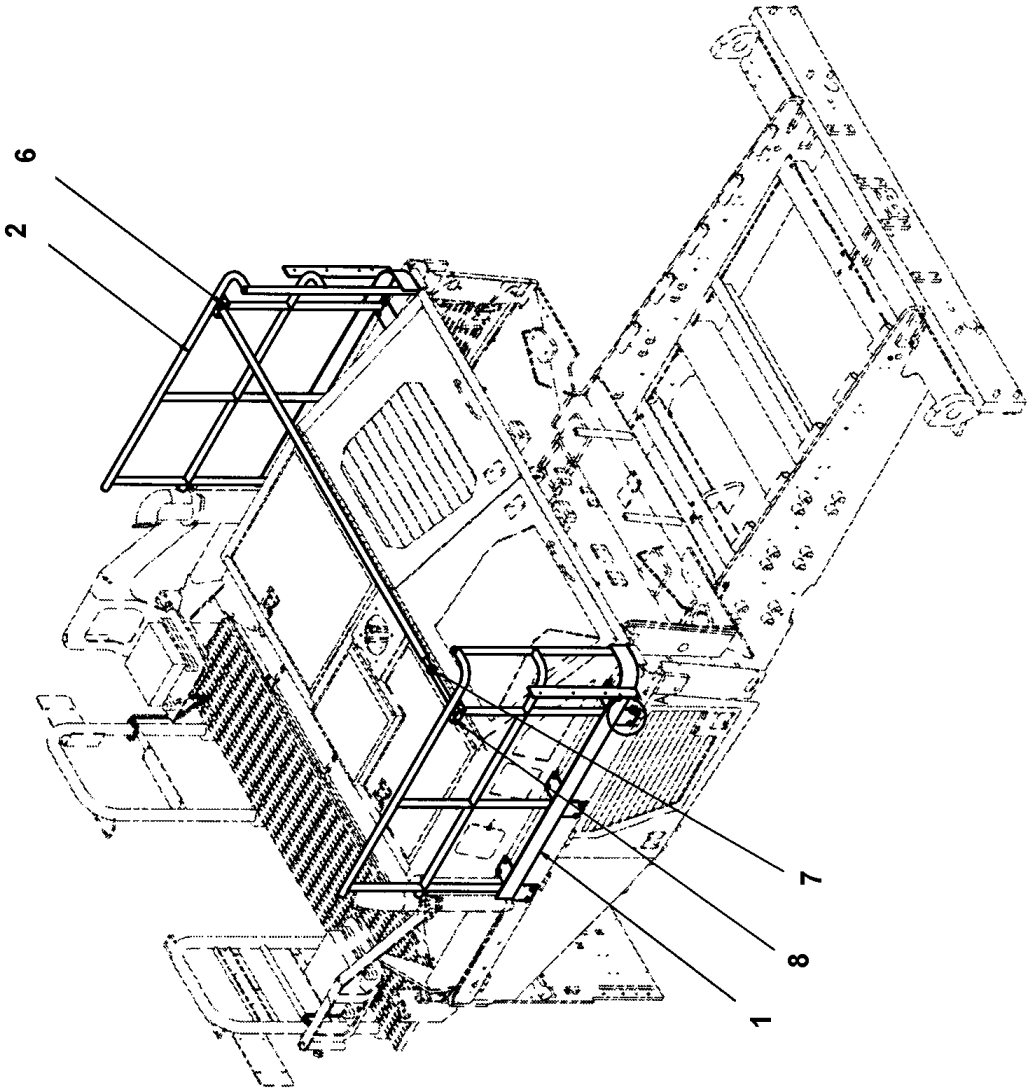

Item	Part No.	Name	Qty	L	SN INFO
1	4812224337	Hand rail, RH	1		
2	4812224338	Hand rail, LH	1		
3	D939776117	Flat washer	72		
4	0147140303	Hexagon bolt	36		
5	0266211200	Hexagon nut M12	36		
6	4812244204	Front hand rail assembly, longer	1		
7	4812244207	Front hand rail assembly, shorter	1		
8	D938150770	Hex. screw	4		

Options D717904500 Umbrella

NO EXPLODED VIEW
AVAILABLE
FOR THIS BOM

Item	Part No.	Name	Qty	L	SN INFO
1	4812200196	Umbrella	1		

Options D717900500 Option, layton truck hitch

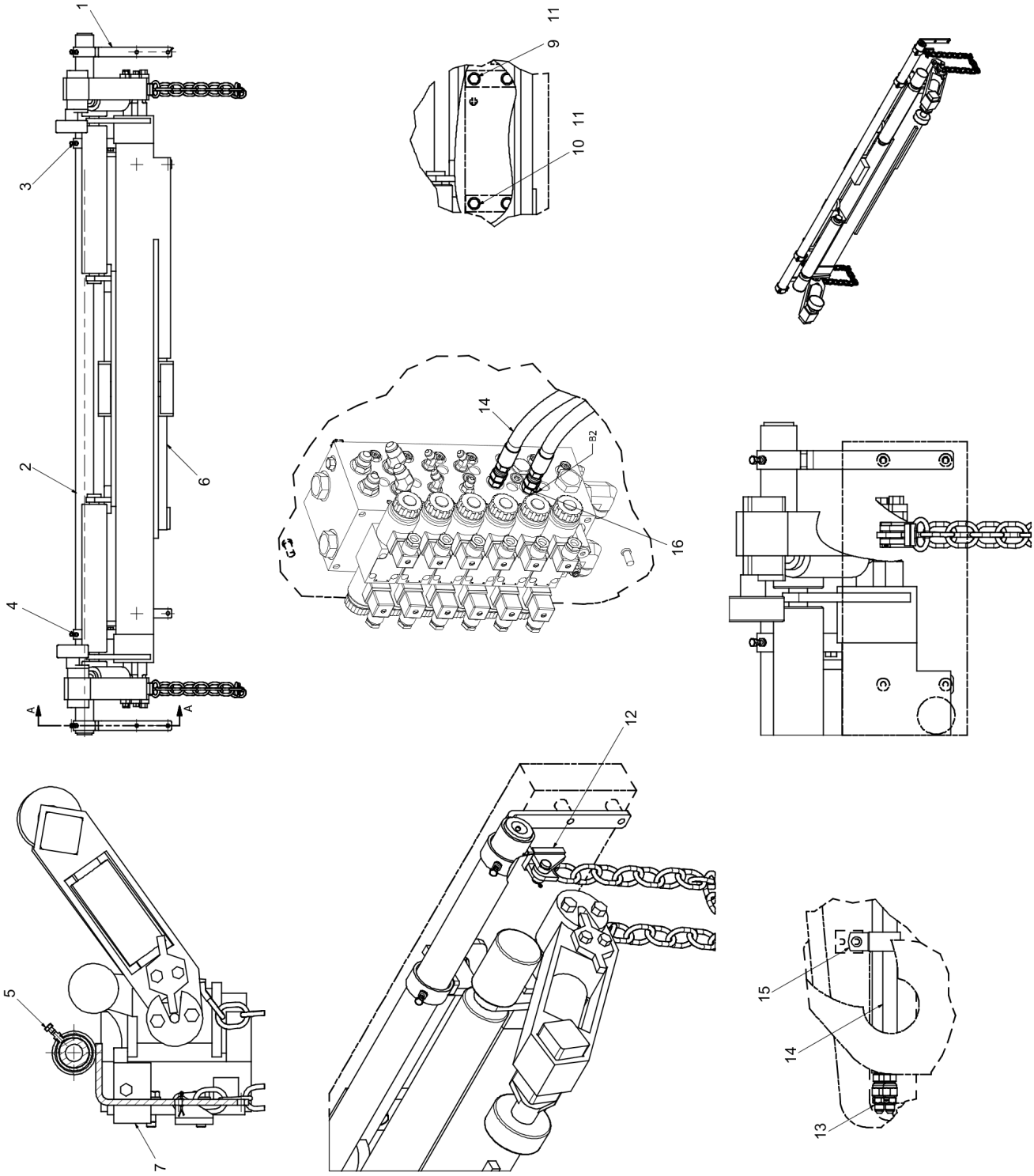

Item	Part No.	Name	Qty	L	SN INFO
1	D717900502	Guide pole support	2		
2	D717011501	Paving guide pole	1		
3	D717900503	Guide pole support, left	1		
4	D717900504	Guide pole support, right	1		
5	D717801205	Screw, 3/8'	4		
6	D717900501	Truck hitch	1		
7	D717900505	Plate, truck hitch stop	2		
8	D717900506	Hose list, truck hitch option	1		
9	D717800645	Screw, 3/4'	4		
10	D717800638	Screw, 3/4'	4		
11	D717801072	Hard flat washer, 3/4 - narrow	8		
12	4812222611	Chain mounting	2		
13	D717801541	Fitting, 06-05	2		
14	D717920702	Hose assy, 06	2		
15	4812222607	P clamp	7		
16	D717800323	Adapter	2		

4812244902 AUS country package 4812244902 AUS country package

NO DRAWING AVAILABLE FOR THIS BOM

Item	Part No.	Name	Qty	L	SN INFO
2	4812244884	LED lights with magnetic holder	1		
3	4812244886	Back up alarm-ecco smart alarm	1		
4	4812244624	AUS cable post assembly	1		
5	4812244517	Pedal assembly for AUS	1		
6	4812244105	Two point indicator AUS	1		
7	4812223839	Assembly, tow point indicator	1		

4812244902 AUS country package 4812244624 AUS cable post assembly

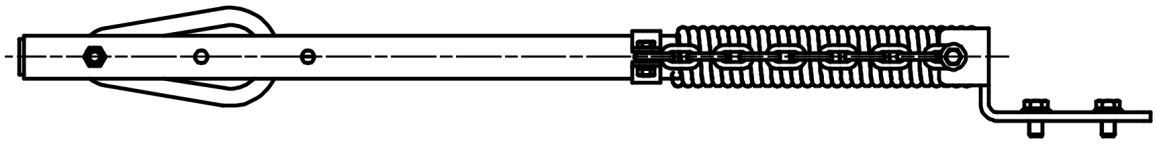

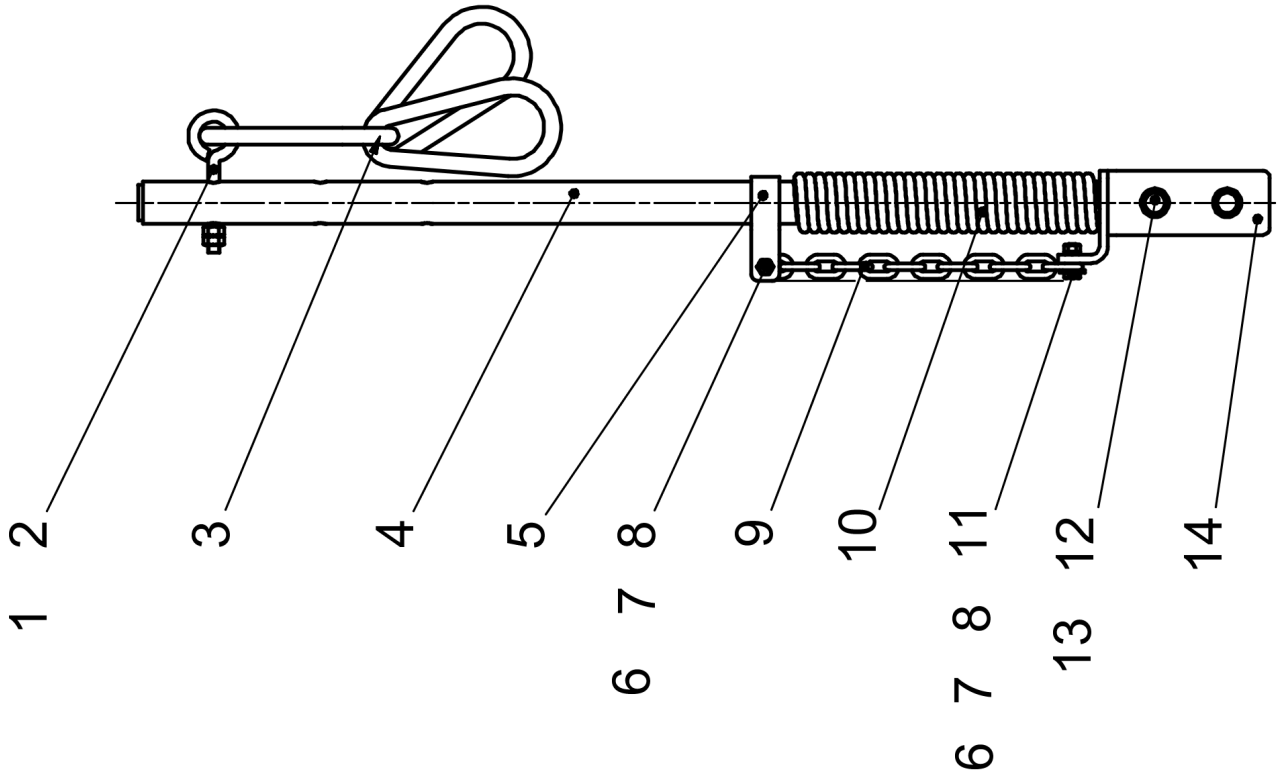

Item	Part No.	Name	Qty	L	SN INFO
1	4812244607	Bolt	1		
2	0266211000	Nut DIN934	2		
3	4812244606	Egg-shape spring hook	3		
4	4812244623	AUS cable post rob weldment	1		
5	4812244608	AUS cable post clip	1		
6	0147124703	Screw M6 x 20	2		
7	4812241086	Washer	2		
8	5730015118	Hexagon nut	2		
9	4812244616	Chain	1		
10	4812244620	AUS cable post spring	1		
11	0300013041	Flat washer	1		
12	D717800617	Screw, 3/8'	2		
13	0301234400	Washer plain	2		
14	4812244619	AUS cable post support	1		

4812244902 AUS country package 4812244517 Pedal assy for AUS

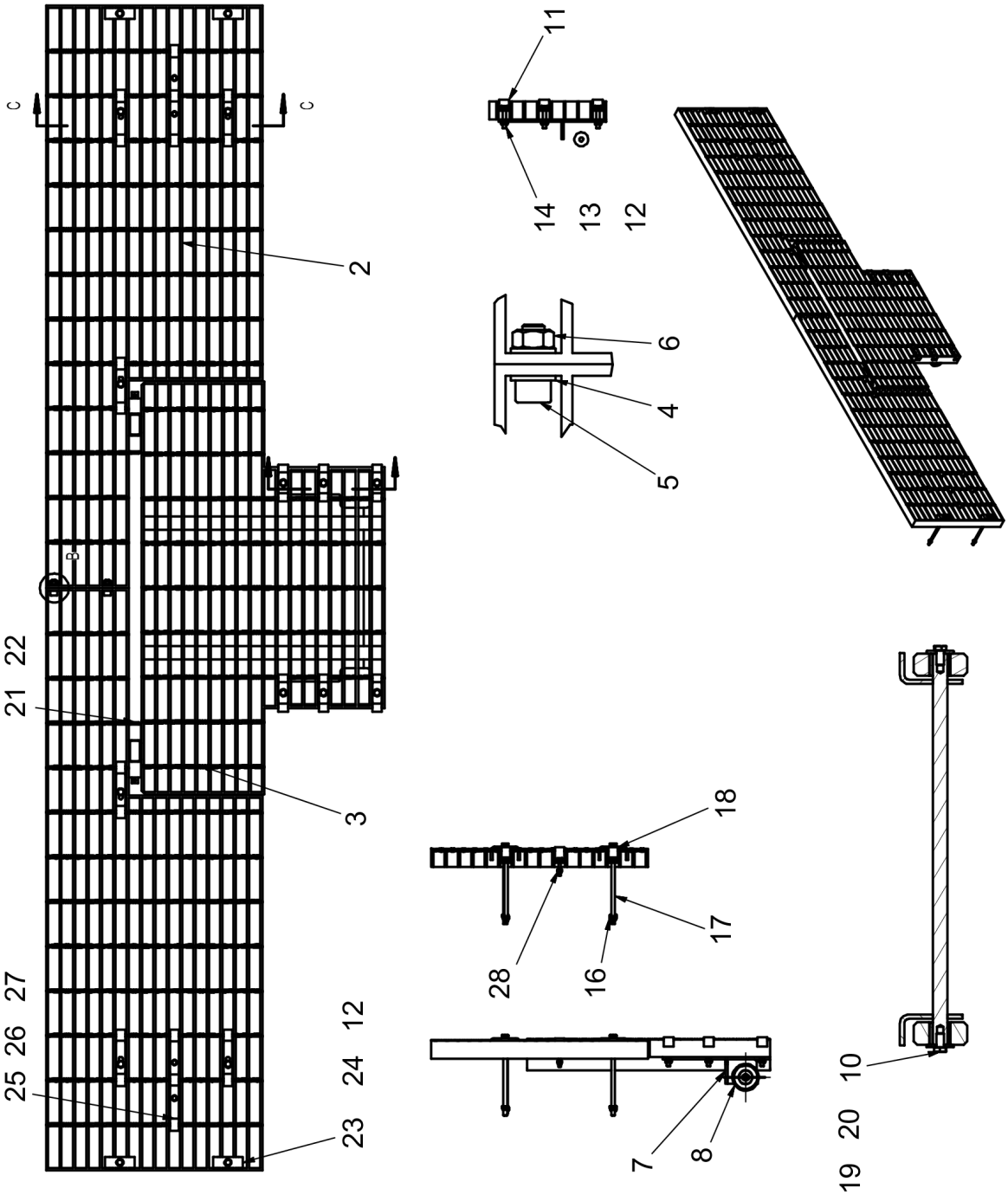

Item	Part No.	Name	Qty	L	SN INFO
1	4812244518	Weldment, pedal left rear	1		
2	4812244519	Weldment, pedal right rear	1		
3	4812244520	Weldment, pedal middle	1		
4	0302127405	Flat washer	4		
5	0211136203	Screw DIN912	2		
6	0266211100	Hexagon nut	2		
7	4812244521	Support	1		
8	4812244522	Roller	2		
10	D499018630	Screw	2		
11	4812244523	Clip	6		
12	0301233500	Plain washer(A) 8.4 x 16 x 1.6	16		
13	0291118802	Hexagon nut	6		
14	0147132903	Screw DIN931	6		
16	0291111000	Nut DIN985	10		
17	4812001284	Hexagon screw	6		
18	4812223957	Clip, Grating tie down	6		
19	4812244644	Bearing	2		
20	4812244645	Washer	2		
21	4812244652	Spindle	2		
22	D936790545	Split pin	2		
23	4812224142	Clip, Grating tie down	4		
24	4812224143	Bolt	4		
25	4812223958	Clip, Grating tie down	2		
26	0301232100	Washer DIN125	4		
27	0147125103	Hex. Head screw	4		
28	0291112854	Hexagon nut	4		

4812244902 AUS country package 4812244105 Tow point indicator AUS

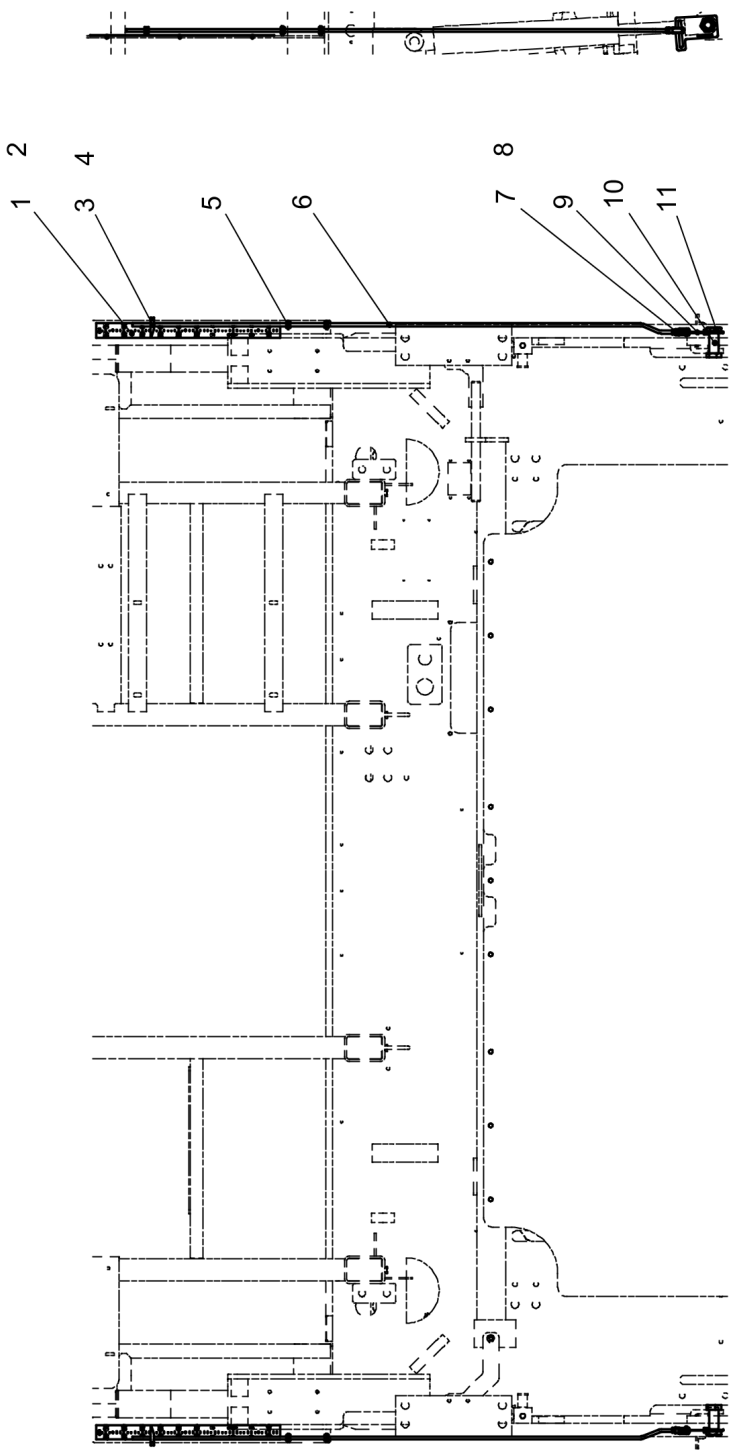

Item	Part No.	Name	Qty	L	SN INFO
1	4812031456	Scale	2		
2	4812026010	Blind rivet	6		
3	4812032209	Pointer	2		
4	0211124303	Screw M6x10 ISO 4762	2		
5	4812031296	Cable bushing	4		
6	4812244435	Tow point rod AUS	2		
7	934803416	Fork end	2		
8	0266211000	Nut DIN934	2		
9	4812244432	Tow indicator plate	2		
10	4812244431	Tow pin AUS	2		
11	0261109935	Nut	2		

4812222847 Kit, wide width paving 4812222847 Kit, wide width paving

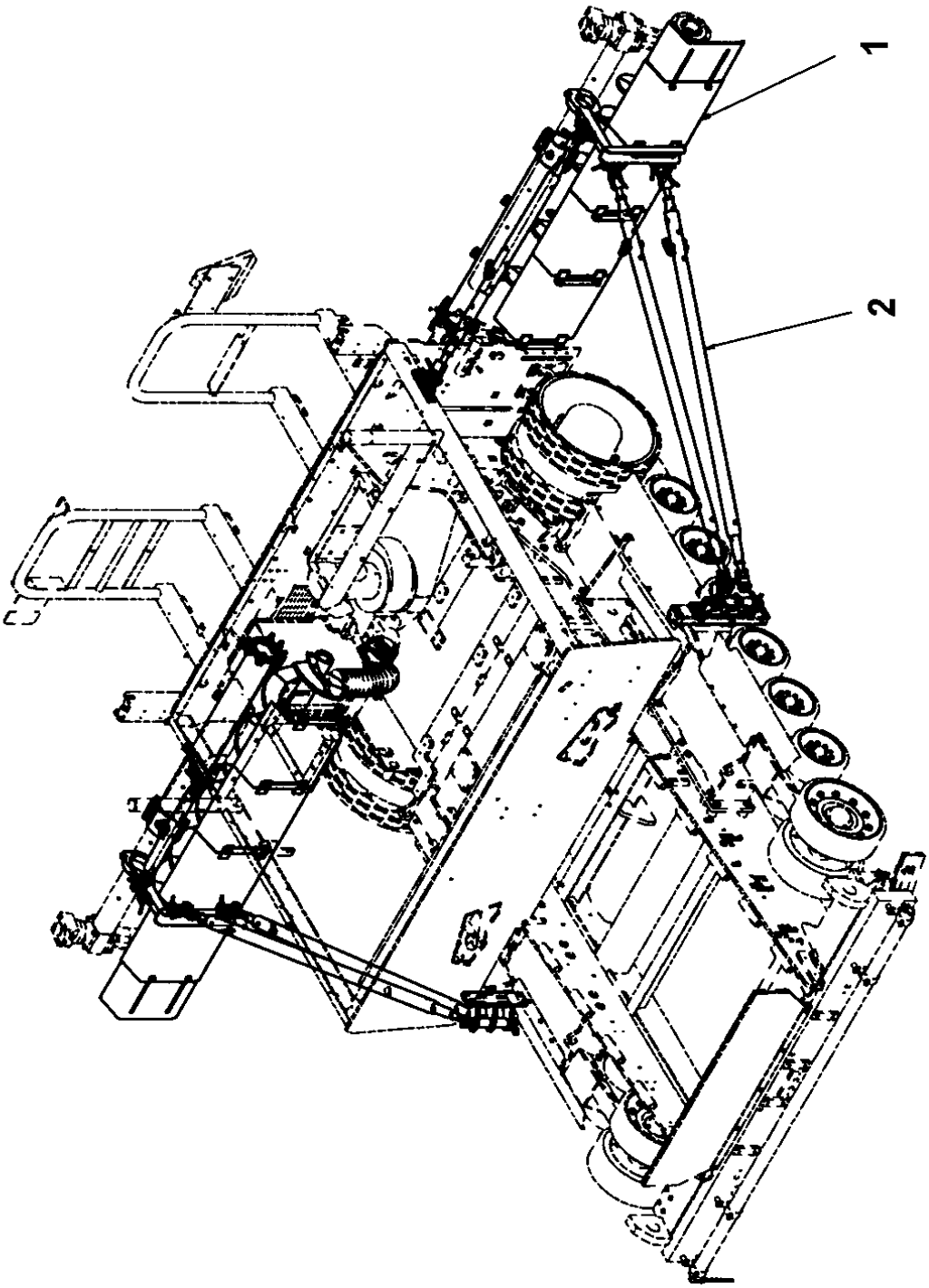

Item	Part No.	Name	Qty	L	SN INFO
1	4812222838	Option, Tunnel extensions kit	1		
2	4812224357	Kit, mounting components	1		
3	D722182300	Extension, left	2		
4	D722182100	Extension, left	1		
5	D722182400	Extension, right	2		
6	D722182200	Extension, right	1		

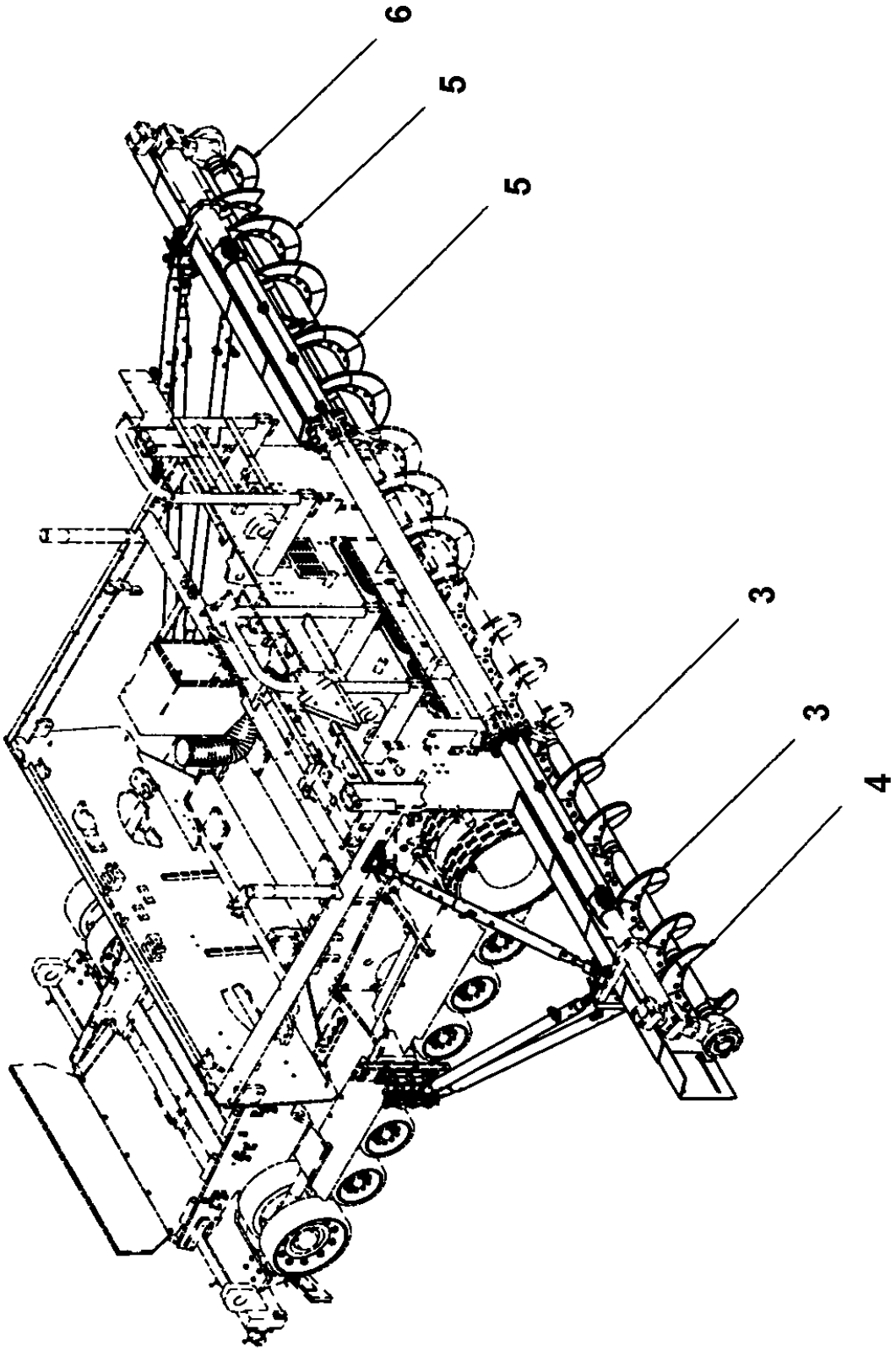
6
5
5
3
3
4

This page intentionally left blank

4812222847 Kit, wide width paving 4812224357 Kit, mounting components

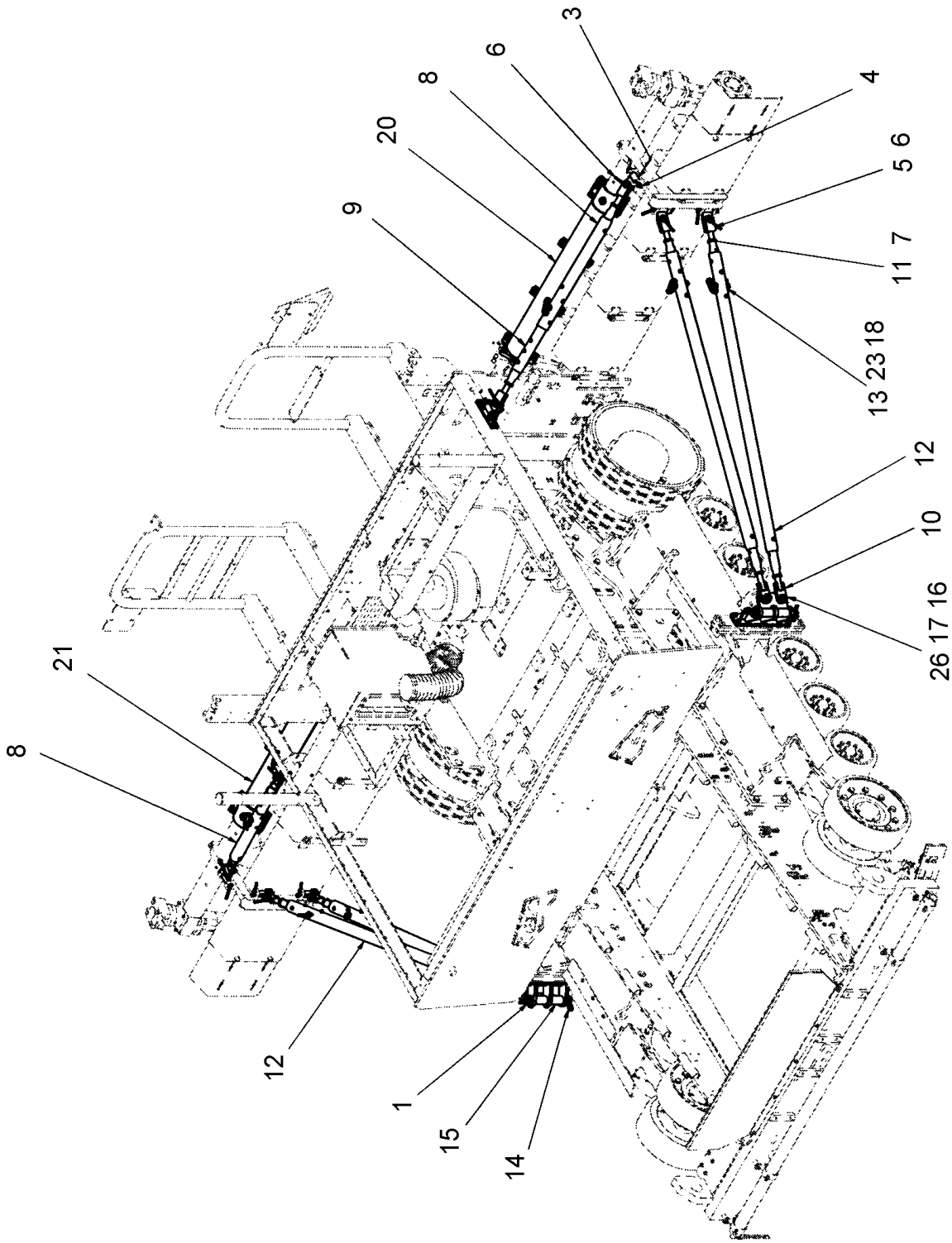

Item	Part No.	Name	Qty	L	SN INFO
1	4812223393	Arm retainer, weldment	2		
2	4812223397	Bracket, weldment	2		
3	4812224220	Bracket, weldment	8		
4	4812224354	Pin. weldment	8		
5	D570130609	Fork head	8		
6	D990020153	Bolt	8		
7	0261109972	Hexagon nut	12		
8	D635170074	Adjuster piece	2		
9	D635170072	Adjuster	2		
10	D439086503	Retaining spindle l.h.	4		
11	D635170076	Adjuster piece	4		
12	D635170078	Adjuster piece	4		
13	D635170080	Socket pin	6		
14	4730010277	Socket pin short	2		
15	D439083600	Fulcrum mounting plate	2		
16	0147110908	Hexagon head screw	4		
17	0261109930	Hexagon nut	4		
18	D930205111	Spring pin	6		
19	D930290105	Hinged split pin	16		
20	D862180182	Extension pipe	1		
21	D862180150	Auger extension tube, RH	1		
22	0147155303	Hexagon head screw	10		
23	4734051399	Washer	16		
24	0147140303	Hexagon bolt	4		
25	0301235800	Plain washer(A) 13 x 24 x 2.5	4		
26	D717801065	Washer, 1'	8		
27	4812224361	Hexagon head screws	8		
28	4812223878	Washer	8		

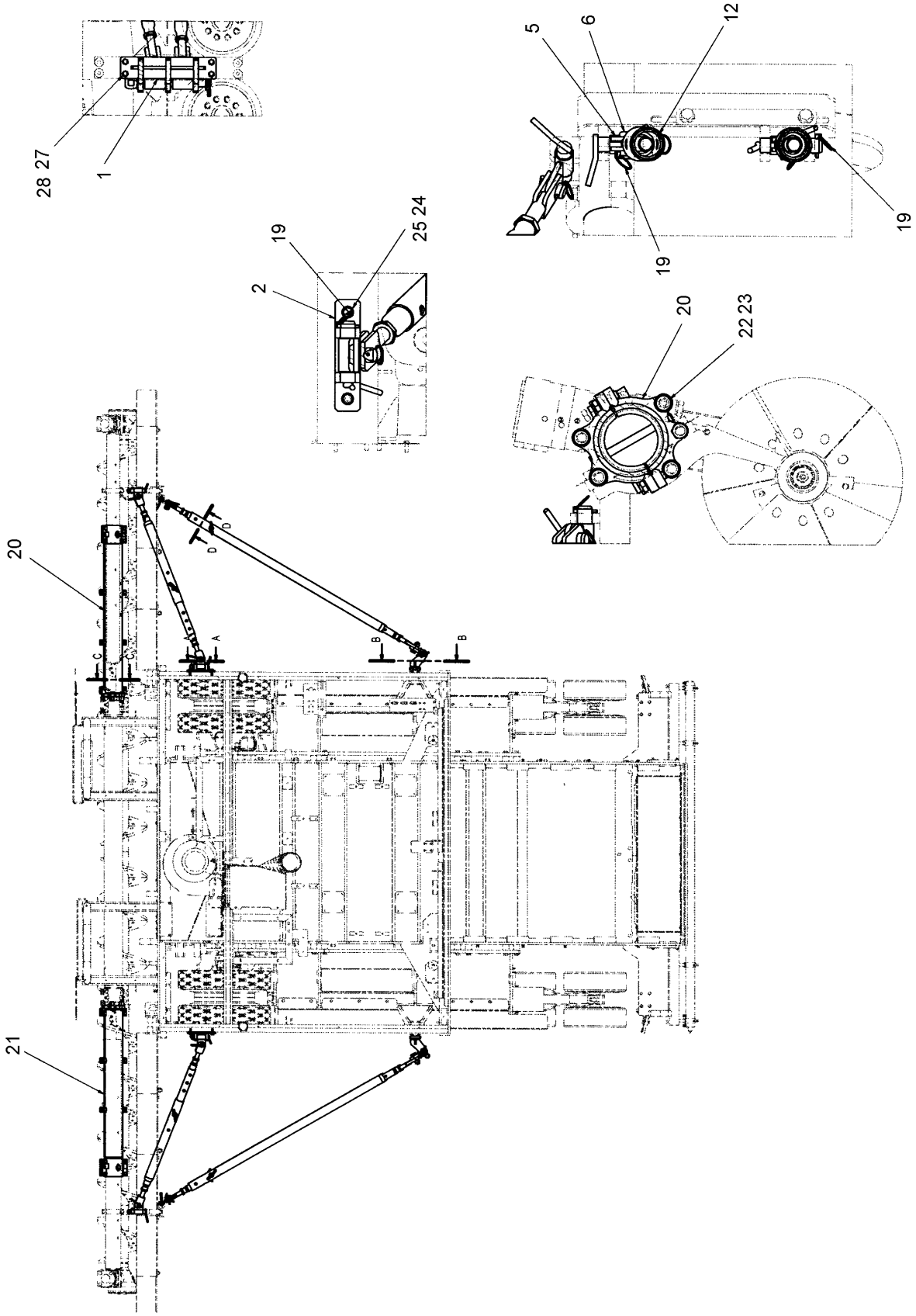
28 27
1
19
25 24
2
20
21
5
6
12
19
19
20
22 23
A
B
B
C
C
D
D

Appendix B:Parts Index

0106636900 478
0108133100 166
0108142500 104
0147110672 80
0147110836 . . . . . 210, 232
0147110904 . . . . . 100, 102
0147110908 542
0147117303 202
0147124303 288
0147124403 . . . . . 144, 148, 358
0147124703 . 64, 144, 148, 152, 158, 170, 176, 180, 210, 232, 480, 532
0147125003 . . . . . 286, 290
0147125103 . . . . . 134, 534
0147125112 . . . . . 64, 170
0147132203 . . . . . 176, 180
0147132303 . . . . . 36, 78, 86, 126, 146, 168, 176, 180, 192, 234
0147132503 . . . . . 134, 146, 158, 180, 208, 232, 354, 368, 402
0147132603 . . . . . 62, 492, 498
0147132703 . . . . . 288, 292
0147132712 386
0147132903 534
0147136003 . . 64, 94, 138, 142, 146, 158, 168, 210, 232, 286, 290, 356
0147136203 . . . . . 64, 474, 496
0147136303 104
0147136403 . . . . . 68, 134
0147136503 356
0147136712 . . . . . 492, 498
0147137003 144
0147137103 84
0147137603 . . . . . 180, 192
0147140003 270
0147140103 . . . . . 64, 180, 502
0147140203 . . . . . 64, 68, 270, 288, 292
0147140303 . . . . . 286, 290, 460, 484, 524, 542
0147140705 66
0147141003 358
0147141112 . . . . . 100, 102
0147141503 62
0147141703 270
0147143803 . . . . . 64, 68
0147147503 . . . . . 492, 498
0147147603 . . . . . 492, 498
0147147703 . . . . . 106, 122, 520
0147147803 . . . . . 434, 440, 444, 446, 464, 466
0147147903 104
0147148012 474
0147148117 474
0147149103 . . . . . 112, 114, 124, 418, 424
0147151710 484
0147155103 104
0147155303 542
0147163003 474
0147163603 462
0147195899 112
0147196044 238
0147196069 202
0147196101 70
0147196264 . . . . . 64, 100, 102, 146, 168, 236, 398
0147196394 . . . . . 84, 176, 180
0147196448 134
0160605800 180
0192136000 . . . . . 492, 498
0196124700 . . . . . 44, 478, 480
0196155317 104
0211124303 536
0211125003 176
0211132303 . . . . . 116, 438
0211132503 480
0211132603 . . . . . 116, 438
0211136203 534
0211140303 . . . . . 130, 510
0211196498 270
0211220554 294
0215000620 158
0215001065 106
0215001084 . . . . . 288, 292
0215001085 72
0216110016 498
0216110059 . . . . . 40, 80, 92
0216195748 236
0216195761 62
0216195762 116
0216195773 . . . . . 208, 230, 492, 498
0216195783 64
0261109154 . . . . . 460, 462
0261109911 64
0261109930 542
0261109935 536
0261109954 160
0261109972 . . . . . 460, 462, 542
0266210700 486
0266211000 . . . . . 146, 176, 180, 192, 532, 536
0266211100 . . . . . 146, 534
0266211200 . . . . . 68, 502, 524
0277131100 72
0291111000 . . . . . 80, 134, 158, 354, 386, 534
0291111200 . . . . . 272, 286, 290, 358
0291112854 . . . . . 64, 134, 158, 170, 288, 292, 354, 534
0291112862 202

0291118511 462
0291118549 . 12, 14, 16, 30, 32, 34, 38, 54, 64, 80, 84, 88, 94, 134, 144, 146, 152, 158, 168, 176, 180, 236, 270, 368, 386, 398, 468
0291118802 . . . . . 234, 534
0298010400 . . . . . 134, 148
0300013029 . . . . . 180, 486
0300013036 . . . . . 120, 122
0300013040 146
0300013041 532
0300013042 . . . . . 100, 102
0300013045 180
0300013047 468
0300027413 70
0301231500 292
0301231800 . . . . . 288, 292
0301232100 . 64, 134, 144, 148, 152, 158, 170, 286, 290, 354, 368, 534
0301233500 . . 62, 78, 126, 144, 146, 158, 180, 192, 234, 288, 292, 354, 368, 534
0301234400 . 64, 70, 72, 100, 102, 134, 138, 142, 144, 146, 158, 234, 270, 286, 290, 354, 368, 386, 532
0301235800 62, 66, 100, 102, 166, 270, 286, 290, 358, 460, 542
0301237800 474
0302127405 534
0324155059 480
0324155060 480
0324155061 480
0324155212 . . . . . 18, 478
0324155213 . . . . . 18, 478
0324155217 480
0324155218 480
0324155224 . . . . . 18, 478
0324155229 480
0324155230 480
0324155240 480
0333310024 . . . . . 104, 294
0333310042 112, 114, 124, 416, 418, 422, 424, 428, 430, 436, 442
0333310043 . . . . . 180, 484
0333310045 480
0333310049 104
0333317415 484
147147703 120
216110016 492
3370044501 . . . . . 492, 498
4700116037 480
4700281898 406
4700330383 42
4700348331 394
4700357587 406
4700358881 52
4700382751 406
4700791709 64
4700791744 . . . . . 492, 498
4700792334 . . . . . 492, 498
4700792584 60
4700903423 406
4700903424 406
4700903459 406
4700904234 . . . . . 208, 228, 230
4700904639 358
4700904835 406
4700904984 . . . . . 286, 286, 290, 290, 398, 398
4700921104 . . . . . 62, 392
4700940451 52
4700991658 406
4730000369 104
4730010277 . . . . . 458, 542
4732512399 . . . . . 40, 94
4734051399 . . . . . 460, 462, 542
4749301479 134
4749900236 276
4749900429 104
4749900538 . . . . . 492, 498
4749900615 . . . . . 40, 92
4749901556 . . . . . 112, 114, 124, 416, 418, 422, 424, 428, 430, 436, 442
4749901794 62
4749901806 . . . . . 108, 158, 168, 176, 180
4749901807 . . . . . 64, 158, 492, 498
4749901808 . . . . . 64, 66, 90
4749901809 . . . . . 104, 120, 122, 434, 440, 448
4749901853 . . . . . 104, 468, 492, 498, 512
4749901860 . . . . . 176, 180
4811000344 406
4812001284 . . . . . 134, 534
4812004444 116
4812004445 116
4812006106 104
4812007433 116
4812009396 110
4812009399 110
4812009402 110
4812009443 110
4812025391 202
4812026010 536
4812026723 116
4812026850 104
4812027408 104
4812027538 104
4812027539 104
4812027565 104

4812030443 116
4812030667 116
4812031296 536
4812031456 536
4812032209 536
4812034470 110
4812034472 110
4812034975 . . . . . 288, 292
4812040158 . . . . . 18, 478
4812040159 . . . . . 18, 478
4812040894 . . . . . 106, 116, 438
4812040997 484
4812041189 106
4812041337 . . . . . 12, 30
4812042526 . . . . . 12, 16
4812042528 . . . . . 12, 14
4812042530 . . . . . 30, 34
4812042532 . . . . . 30, 32
4812042646 106
4812043214 . . . . . 106, 112, 416, 422
4812045075 110
4812045878 . . . . . 208, 228, 230
4812045879 70
4812112874 406
4812119085 . . . . . 176, 178
4812200009 26
4812200014 2
4812200019 2
4812200036 2
4812200054 248
4812200055 236
4812200056 518
4812200058 512
4812200060 512
4812200061 254
4812200062 236
4812200074 . . . . . 288, 292
4812200078 294
4812200081 . . . . . 198, 468
4812200082 518
4812200085 362
4812200086 362
4812200087 294
4812200104 254
4812200113 . . . . . 248, 284
4812200120 . . . . . 198, 270
4812200130 468
4812200193 . . . . . 76, 78, 78
4812200196 526
4812200197 254
4812200198 254
4812200201 236
4812200203 284
4812200205 352
4812200208 236
4812200209 248
4812200216 50
4812200217 . . . . . 4, 468
4812200224 50
4812200226 . . . . . 50, 352
4812200229 358
4812200230 358
4812200233 50
4812200309 196
4812200311 392
4812200312 392
4812200313 392
4812200314 392
4812200315 392
4812200329 278
4812200330 278
4812200331 278
4812200332 278
4812200333 278
4812200334 278
4812200335 278
4812200336 278
4812200337 278
4812200338 278
4812200339 278
4812200340 278
4812200341 278
4812200342 278
4812200344 278
4812200345 280
4812200346 280
4812200347 280
4812200348 280
4812200349 280
4812200350 280
4812200351 280
4812200352 280
4812200354 280
4812200355 280
4812200356 280
4812200357 280
4812200358 280
4812200360 278
4812200361 280
4812200362 280
4812200366 280
4812200367 280

4812200368 280
4812200369 280
4812200370 280
4812200371 280
4812200374 280
4812200375 280
4812200376 280
4812200378 280
4812200380 280
4812200382 280
4812200383 282
4812200385 488
4812200388 42
4812200390 42
4812200397 278
4812200398 352
4812200399 278
4812200401 . . . . . 288, 292
4812200403 248
4812200407 96
4812200410 248
4812200411 278
4812200413 236
4812200416 516
4812200417 198
4812200418 198
4812200419 196
4812200422 372
4812200423 380
4812200424 364
4812200425 366
4812200432 196
4812200433 . . . . . 174, 178
4812200436 294
4812200441 272
4812200447 . . . . . 286, 290
4812200448 . . . . . 286, 290
4812200449 . . . . . 286, 290
4812200454 96
4812200455 96
4812200456 278
4812200457 280
4812200458 280
4812200460 280
4812200461 280
4812200462 280
4812200463 280
4812200464 282
4812200465 282
4812200468 96
4812200509 282
4812200513 488
4812200514 282
4812200515 282
4812200525 96
4812200526 352
4812200527 270
4812200528 270
4812200529 270
4812200533 354
4812200535 354
4812203016 104
4812203017 104
4812203018 116
4812203022 104
4812203040 104
4812203041 104
4812203042 104
4812203043 104
4812203045 118
4812203046 120
4812203048 104
4812203050 118
4812203051 122
4812203192 108
4812203211 . . . . . 114, 124, 418, 424
4812203221 108
4812203324 . . . . . 112, 114
4812203325 . . . . . 112, 124
4812203743 496
4812203745 . . . . . 492, 498
4812203820 . . . . . 428, 430
4812203832 . . . . . 444, 466
4812203895 460
4812204070 182
4812204088 506
4812204089 490
4812204090 490
4812204091 492
4812204092 498
4812204096 492
4812204098 498
4812204099 450
4812204100 450
4812204101 450
4812204102 . . . . . 444, 450
4812204103 . . . . . 444, 450
4812204104 450
4812204106 492
4812204107 498
4812204111 . . . . . 492, 498
4812204113 . . . . . 492, 498

4812204190 . . . . . 100, 102
4812204299 180
4812204300 180
4812204333 132
4812204348 182
4812204357 180
4812204446 458
4812204465 . . . . . 426, 434
4812204467 . . . . . 426, 440, 444
4812204468 458
4812204513 510
4812204514 130
4812204532 182
4812204533 182
4812204538 182
4812204563 . . . . . 414, 434, 454
4812204580 . . . . . 420, 440, 456
4812204581 490
4812204582 500
4812204584 500
4812204585 500
4812204586 500
4812204587 502
4812204588 500
4812204591 . . . . . 128, 508
4812204592 128
4812204593 504
4812204594 504
4812204596 504
4812204597 504
4812204598 504
4812204599 504
4812204603 508
4812204708 504
4812204709 132
4812204721 506
4812204766 432
4812204767 432
4812204769 . . . . . 130, 510
4812204770 . . . . . 130, 510
4812204815 506
4812220077 406
4812220078 406
4812220079 406
4812220080 406
4812220081 406
4812220082 406
4812220088 400
4812220092 406
4812220093 406
4812220095 406
4812220097 406
4812220098 42
4812220142 270
4812220143 270
4812220161 42
4812220181 236
4812220182 236
4812220508 . . . . . 174, 178
4812220509 196
4812220515 196
4812220516 196
4812220521 196
4812220575 364
4812220644 . . . . . 174, 178
4812220689 270
4812220702 . . . . . 374, 380
4812220715 202
4812220723 364
4812220724 364
4812220725 364
4812220726 366
4812220727 366
4812220728 366
4812220734 270
4812220748 234
4812220749 . . . . . 6, 10, 234
4812220754 72
4812220770 270
4812220771 . . . . . 6, 10, 270, 274
4812220780 272
4812220782 270
4812220789 272
4812220793 236
4812220794 234
4812220801 272
4812220804 272
4812220806 272
4812220807 272
4812220864 236
4812220868 236
4812220870 236
4812220876 234
4812220881 196
4812220885 . . . . . 6, 10, 234, 268
4812220886 370
4812220887 368
4812220889 236
4812220890 236
4812220896 . . . . . 176, 178
4812220900 . . . . . 372, 380
4812220903 . . . . . 372, 380

4812220905 . . . . . 372, 380
4812220907 . . . . . 374, 380
4812220910 196
4812220911 . . . . . 236, 284
4812220912 196
4812220916 . . . . . 6, 8, 10
4812220918 . . . . . 6, 8, 10
4812220919 . . . . . 8, 10
4812220920 10
4812220921 . . . . . 8, 10, 188
4812220922 . . . . . 8, 10, 188
4812220956 196
4812220957 196
4812220958 . . . . . 374, 382
4812220960 196
4812220962 368
4812220979 . . . . . 56, 354
4812220980 354
4812220981 354
4812220982 354
4812220988 354
4812221024 162
4812221025 162
4812221066 354
4812221067 354
4812221070 . . . . . 56, 354
4812221095 248
4812221096 236
4812221166 162
4812221168 162
4812221171 162
4812221172 162
4812221173 162
4812221177 162
4812221178 162
4812221179 162
4812221181 162
4812221182 162
4812221201 272
4812221225 162
4812221226 162
4812221232 162
4812221352 152
4812221363 134
4812221364 162
4812221388 144
4812221389 144
4812221425 152
4812221537 . . . . . 288, 292
4812221547 288
4812221548 286
4812221566 100
4812221567 102
4812221580 80
4812221582 354
4812221656 . . . . . 174, 178
4812221694 . . . . . 210, 232
4812221781 . . . . . 288, 292
4812221782 . . . . . 288, 292
4812221786 . . . . . 286, 290
4812221792 . . . . . 286, 290
4812221794 . . . . . 286, 290
4812221795 . . . . . 288, 292
4812221796 . . . . . 288, 290
4812221798 . . . . . 286, 290
4812221830 . . . . . 138, 142
4812221839 196
4812221840 196
4812221841 196
4812221842 196
4812221856 202
4812221881 62
4812221916 272
4812222043 184
4812222060 . . . . . 174, 178
4812222078 52
4812222079 78
4812222080 78
4812222081 62
4812222082 . . . . . 4, 394
4812222086 196
4812222089 148
4812222090 148
4812222093 148
4812222097 196
4812222099 . . . . . 196, 196, 198, 198
4812222135 368
4812222170 366
4812222171 . . . . . 374, 382
4812222172 . . . . . 374, 382
4812222186 . . . . . 374, 382
4812222206 . . . . . 374, 382
4812222211 368
4812222214 . . . . . 374, 382
4812222215 158
4812222216 158
4812222217 158
4812222218 158
4812222219 158
4812222237 354
4812222240 . . . . . 28, 88
4812222241 374

4812222246 354
4812222278 368
4812222291 196
4812222293 198
4812222299 196
4812222300 196
4812222301 282
4812222303 196
4812222304 196
4812222332 148
4812222340 148
4812222341 148
4812222345 . . . . . 286, 290
4812222346 . . . . . 286, 290
4812222347 148
4812222366 152
4812222376 152
4812222378 152
4812222379 152
4812222380 152
4812222382 156
4812222383 156
4812222384 156
4812222385 156
4812222386 156
4812222387 152
4812222388 152
4812222390 156
4812222391 156
4812222392 156
4812222410 300
4812222411 300
4812222412 300
4812222413 300
4812222414 300
4812222416 300
4812222417 300
4812222418 300
4812222420 300
4812222422 300
4812222423 300
4812222424 300
4812222426 300
4812222427 300
4812222428 300
4812222429 300
4812222430 300
4812222431 300
4812222432 300
4812222433 300
4812222434 300
4812222435 300
4812222436 300
4812222437 300
4812222438 300
4812222439 300
4812222440 300
4812222441 300
4812222442 300
4812222444 302
4812222445 302
4812222446 302
4812222447 302
4812222448 302
4812222449 302
4812222450 302
4812222451 302
4812222452 302
4812222453 302
4812222454 302
4812222455 302
4812222456 302
4812222457 302
4812222458 302
4812222459 302
4812222460 302
4812222461 302
4812222464 300
4812222465 300
4812222466 300
4812222467 300
4812222468 300
4812222469 300
4812222470 300
4812222471 302
4812222472 302
4812222473 302
4812222474 302
4812222475 302
4812222476 302
4812222487 302
4812222519 294
4812222521 96
4812222524 96
4812222542 300
4812222543 302
4812222544 . . . . . 138, 142
4812222545 294
4812222564 522
4812222578 384
4812222579 384
4812222588 276

4812222593 276
4812222599 42
4812222600 42
4812222601 42
4812222607 528
4812222611 528
4812222830 62
4812222834 2
4812222835 2
4812222836 394
4812222838 538
4812223119 212
4812223120 80
4812223121 . . . . . 208, 230
4812223122 208
4812223123 . . . . . 208, 230
4812223124 . . . . . 208, 230
4812223125 . . . . . 208, 230
4812223126 . . . . . 208, 232
4812223127 208
4812223128 . . . . . 208, 230
4812223129 . . . . . 208, 230
4812223130 208
4812223131 . . . . . 208, 230
4812223132 . . . . . 208, 230
4812223133 . . . . . 208, 230
4812223134 226
4812223135 . . . . . 208, 230
4812223138 . . . . . 208, 230
4812223141 . . . . . 208, 230
4812223143 228
4812223144 . . . . . 208, 228, 230
4812223145 . . . . . 208, 230
4812223149 206
4812223150 206
4812223151 204
4812223152 . . . . . 210, 232
4812223153 . . . . . 210, 232
4812223154 . . . . . 210, 232
4812223156 230
4812223157 230
4812223162 230
4812223163 204
4812223196 . . . . . 288, 292
4812223198 . . . . . 286, 290
4812223199 . . . . . 286, 290
4812223201 . . . . . 286, 290
4812223204 . . . . . 286, 290
4812223208 . . . . . 286, 290
4812223209 134
4812223210 146
4812223215 146
4812223217 158
4812223218 146
4812223220 146
4812223222 146
4812223223 146
4812223244 . . . . . 146, 158
4812223248 142
4812223253 142
4812223254 . . . . . 138, 142
4812223255 68
4812223263 134
4812223264 138
4812223274 . . . . . 138, 142
4812223275 . . . . . 138, 142
4812223276 . . . . . 138, 142
4812223284 . . . . . 176, 180, 208, 230, 236
4812223285 . . . . . 208, 230
4812223288 138
4812223289 206
4812223290 134
4812223291 204
4812223292 . . . . . 208, 230
4812223293 . . . . . 138, 142
4812223294 . . . . . 120, 122, 208, 230
4812223295 . . . . . 270, 368, 386, 398
4812223296 . . . . . 208, 232
4812223297 . . . . . 138, 142
4812223298 212
4812223300 2
4812223301 206
4812223302 270
4812223360 134
4812223361 148
4812223363 148
4812223365 148
4812223367 148
4812223368 148
4812223369 148
4812223370 134
4812223371 134
4812223372 152
4812223373 152
4812223374 152
4812223375 152
4812223376 152
4812223377 152
4812223379 152
4812223381 152
4812223393 . . . . . 458, 542
4812223397 . . . . . 460, 542

4812223398 . . . . . 208, 230
4812223409 . . . . . 100, 102
4812223410 . . . . . 100, 102
4812223411 . . . . . 100, 102
4812223414 . . . . . 100, 102
4812223417 . . . . . 100, 102
4812223419 100
4812223420 98
4812223421 102
4812223422 98
4812223423 2
4812223434 . . . . . 210, 232
4812223435 . . . . . 208, 230
4812223436 . . . . . 210, 230, 234
4812223440 . . . . . 174, 178
4812223444 . . . . . 174, 178
4812223454 158
4812223455 158
4812223456 158
4812223457 158
4812223458 158
4812223462 158
4812223500 . . . . . 176, 180, 210, 232
4812223501 . . . . . 36, 86
4812223504 512
4812223505 512
4812223513 80
4812223514 80
4812223515 80
4812223516 80
4812223517 80
4812223519 80
4812223527 84
4812223530 80
4812223532 2
4812223540 . . . . . 22, 100, 102
4812223541 . . . . . 22, 100, 102
4812223549 134
4812223550 144
4812223551 144
4812223552 144
4812223553 144
4812223554 144
4812223555 144
4812223557 144
4812223558 144
4812223559 158
4812223606 62
4812223607 2
4812223608 354
4812223611 354
4812223612 368
4812223617 368
4812223623 354
4812223624 386
4812223625 386
4812223626 368
4812223629 62
4812223630 62
4812223631 62
4812223632 62
4812223633 62
4812223634 62
4812223635 62
4812223636 62
4812223638 62
4812223639 62
4812223640 62
4812223641 62
4812223642 62
4812223643 62
4812223644 62
4812223645 62
4812223646 62
4812223647 62
4812223649 62
4812223650 62
4812223651 62
4812223653 62
4812223654 62
4812223655 62
4812223656 . . . . . 70, 158
4812223657 66
4812223658 66
4812223659 66
4812223660 66
4812223668 66
4812223669 72
4812223674 68
4812223675 68
4812223676 68
4812223697 78
4812223698 78
4812223715 70
4812223719 70
4812223720 70
4812223721 70
4812223722 70
4812223723 70
4812223730 202
4812223736 202
4812223742 236

4812223745 202
4812223753 202
4812223777 196
4812223780 196
4812223785 198
4812223786 198
4812223788 . . . . . 22, 66
4812223789 . . . . . 22, 100, 102
4812223790 . . . . . 138, 142
4812223794 468
4812223795 . . . . . 106, 120, 122, 468
4812223796 468
4812223797 486
4812223798 468
4812223799 468
4812223803 468
4812223804 468
4812223810 468
4812223825 368
4812223827 234
4812223828 270
4812223829 270
4812223834 234
4812223835 234
4812223836 234
4812223839 . . . . . 236, 530
4812223840 276
4812223841 276
4812223842 276
4812223862 170
4812223863 170
4812223877 144
4812223878 . . . . . 36, 64, 68, 86, 458, 542
4812223879 . . . . . 38, 88
4812223880 86
4812223881 . . . . . 38, 48, 88
4812223885 88
4812223886 90
4812223890 88
4812223891 . . . . . 40, 46, 92
4812223892 92
4812223893 . . . . . 40, 92
4812223894 . . . . . 40, 92
4812223895 . . . . . 40, 92
4812223896 86
4812223897 94
4812223898 94
4812223899 94
4812223903 94
4812223904 94
4812223906 94
4812223907 . . . . . 38, 86
4812223909 . . . . . 38, 86
4812223911 . . . . . 38, 86
4812223913 . . . . . 38, 86
4812223914 90
4812223916 . . . . . 40, 94
4812223917 . . . . . 4, 86
4812223918 26
4812223921 . . . . . 36, 86
4812223926 . . . . . 36, 86
4812223928 . . . . . 36, 86
4812223935 . . . . . 36, 86
4812223938 86
4812223939 394
4812223940 402
4812223943 402
4812223944 404
4812223946 402
4812223949 402
4812223951 402
4812223952 402
4812223953 402
4812223954 402
4812223956 134
4812223957 . . . . . 134, 386, 500, 534
4812223958 . . . . . 134, 534
4812223959 134
4812223960 158
4812223961 158
4812223965 270
4812223968 402
4812223993 468
4812223995 468
4812223996 468
4812223997 . . . . . 36, 86
4812223998 . . . . . 36, 86
4812223999 . . . . . 36, 86
4812224001 . . . . . 36, 86
4812224029 152
4812224056 234
4812224089 158
4812224104 158
4812224142 534
4812224143 . . . . . 502, 534
4812224146 80
4812224147 80
4812224188 512
4812224193 512
4812224194 512
4812224214 512
4812224215 512

4812224217 144
4812224218 144
4812224220 . . . . . 460, 542
4812224247 170
4812224269 134
4812224279 146
4812224288 158
4812224289 158
4812224290 158
4812224293 520
4812224296 520
4812224298 520
4812224302 520
4812224304 520
4812224305 520
4812224306 520
4812224307 520
4812224308 520
4812224309 146
4812224310 146
4812224311 146
4812224314 520
4812224333 394
4812224334 398
4812224335 398
4812224337 524
4812224338 524
4812224354 . . . . . 460, 542
4812224357 538
4812224361 . . . . . 458, 542
4812224391 356
4812224462 134
4812224464 166
4812224465 166
4812224470 166
4812224488 . . . . . 4, 30
4812224489 4
4812224490 . . . . . 4, 12
4812224504 . . . . . 4, 394
4812224523 . . . . . 286, 290
4812224697 190
4812240135 . . . . . 116, 438
4812240170 . . . . . 40, 46, 92
4812240177 . . . . . 116, 438
4812240178 . . . . . 116, 438
4812240180 404
4812240234 . . . . . 116, 438
4812240304 . . . . . 104, 434, 440, 448
4812240307 . . . . . 116, 126, 438
4812240639 354
4812240640 358
4812240660 236
4812240661 234
4812240808 . . . . . 210, 232
4812241086 532
4812241125 . . . . . 210, 228, 230
4812241304 406
4812241328 458
4812241329 458
4812241337 . . . . . 14, 32, 54, 468
4812241339 . . . . . 12, 16, 30, 34, 54, 468
4812241444 . . . . . 130, 468, 510
4812241708 512
4812241709 512
4812241710 234
4812241711 234
4812241722 234
4812241723 234
4812241758 272
4812242270 . . . . . 208, 230
4812242536 234
4812242545 . . . . . 58, 228
4812242548 . . . . . 58, 210, 232
4812242551 . . . . . 58, 210, 232
4812242562 . . . . . 58, 210, 232
4812242584 . . . . . 234, 246
4812242602 . . . . . 28, 92
4812242606 . . . . . 210, 232
4812242627 . . . . . 40, 92
4812242654 . . . . . 40, 92
4812242660 2
4812242697 186
4812242699 184
4812242700 186
4812242922 236
4812242977 2
4812242978 2
4812242985 184
4812243056 . . . . . 174, 178
4812243085 172
4812243123 172
4812243124 172
4812243127 202
4812243128 2
4812243136 . . . . . 174, 178
4812243153 168
4812243179 170
4812243371 170
4812243375 170
4812243377 170
4812243378 170
4812243390 24

4812243391 24
4812243392 24
4812243393 24
4812243446 112
4812243447 112
4812243450 186
4812243451 186
4812243452 186
4812243454 186
4812243455 186
4812243456 186
4812243457 186
4812243459 174
4812243524 174
4812243526 104
4812243527 104
4812243539 . . . . . 174, 178
4812243544 . . . . . 174, 178
4812243546 . . . . . 174, 178
4812243549 186
4812243556 . . . . . 174, 178
4812243557 . . . . . 174, 174, 174, 174
4812243558 406
4812243560 . . . . . 174, 178
4812243561 . . . . . 174, 178
4812243564 . . . . . 174, 178
4812243565 . . . . . 174, 178
4812243566 . . . . . 174, 176
4812243567 . . . . . 174, 178
4812243568 . . . . . 174, 178
4812243573 . . . . . 174, 178
4812243585 . . . . . 236, 284
4812243594 406
4812243597 406
4812243639 394
4812243678 280
4812243679 280
4812243684 280
4812243685 280
4812243688 282
4812243689 236
4812243693 282
4812243710 . . . . . 120, 122
4812243934 406
4812244099 4
4812244105 530
4812244204 524
4812244207 524
4812244431 536
4812244432 536
4812244435 536
4812244517 530
4812244518 534
4812244519 534
4812244520 534
4812244521 534
4812244522 534
4812244523 534
4812244606 532
4812244607 532
4812244608 532
4812244616 532
4812244619 532
4812244620 532
4812244623 532
4812244624 530
4812244644 534
4812244645 534
4812244652 534
4812244884 530
4812244885 356
4812244886 530
4812244890 . . . . . 12, 16, 30, 34, 54, 468
4812244891 . . . . . 12, 14, 30, 32, 54, 468
4812245439 294
4812245546 . . . . . 12, 14, 16, 30, 32, 34, 54, 468
4812245547 . . . . . 54, 468
4812246070 . . . . . 416, 428, 436
4812246071 . . . . . 422, 430, 442
4812246086 106
4812246214 . . . . . 468, 478
4812246229 126
4812246230 104
4812246283 . . . . . 116, 438
4812246286 . . . . . 116, 438
4812246299 . . . . . 116, 438
4812246300 . . . . . 116, 438
4812246301 . . . . . 116, 438
4812246302 . . . . . 116, 438
4812246303 . . . . . 116, 438
4812246417 502
4812246652 496
4812246733 238
4812246868 468
4812246882 . . . . . 174, 178
4812246887 190
4812246888 . . . . . 174, 178
4812246946 356
4812246958 354
4812246959 354
4812246960 374
4812246961 374

4812246962 382
4812246963 382
4812246967 354
4812246972 354
4812246980 366
4812247066 . . . . . 416, 422, 428, 430, 436, 442
4812247068 . . . . . 416, 422
4812247101 438
4812247102 . . . . . 436, 442
4812247103 . . . . . 434, 448
4812247104 . . . . . 440, 448
4812247107 . . . . . 414, 444, 454
4812247108 . . . . . 420, 456
4812247111 446
4812247141 198
4812247142 198
4812247178 134
4812247179 168
4812247180 134
4812247181 134
4812247182 168
4812247190 170
4812247191 160
4812247195 168
4812247197 168
4812247198 170
4812247251 372
4812247253 380
4812247257 380
4812247258 372
4812247428 294
4812247480 144
4812247539 . . . . . 100, 102
4812247598 . . . . . 180, 202
4812247620 186
4812247625 406
4812247645 134
4812247646 134
4812247648 174
4812247649 192
4812247650 192
4812247651 192
4812247652 . . . . . 180, 192
4812247661 . . . . . 286, 290
4812247662 . . . . . 286, 290
4812247669 288
4812247672 . . . . . 286, 290
4812247673 . . . . . 286, 290
4812247676 . . . . . 174, 178
4812247677 . . . . . 174, 178
4812247711 406
4812247882 112
4812247883 112
4812247915 . . . . . 64, 210, 232
4812247929 64
4812248132 42
4812248177 148
4812248242 . . . . . 174, 178
4812248243 . . . . . 174, 178
4812248248 104
4812248341 . . . . . 176, 178
4812248342 . . . . . 176, 178
4812248594 84
4812248595 84
4812248617 500
4812248719 366
4812248779 444
4812248780 450
4812248799 180
4812248823 412
4812248825 412
4812248826 452
4812248829 452
4812248889 . . . . . 440, 444, 464
4812249188 104
4812249319 406
4812249320 406
4812249321 408
4812249352 180
4812249355 180
4812249361 134
4812249411 352
4812249496 . . . . . 492, 498
4812249575 180
4812249580 180
4812249588 180
4812249596 . . . . . 208, 230
4812249965 112
4812249995 112
4812249998 . . . . . 434, 464
4812250003 . . . . . 138, 142
4812269054 4
4812269055 4
4812269056 4
4812269057 4
4812269058 . . . . . 4, 28
4812269060 . . . . . 4, 36
4812269061 . . . . . 4, 38
4812269062 4
4812269064 4
4812269085 256
4812269086 . . . . . 4, 48

4812269087 4
4812269103 . . . . . 6, 10, 234
4812269104 . . . . . 6, 10
4812269105 4
4812269127 224
4812269128 224
4812269129 224
4812269130 224
4812270217 252
4812270218 252
4812270219 252
4812270220 252
4812270221 252
4812270222 252
4812270229 200
4812270230 200
4812270231 200
4812270232 200
4812270233 200
4812270234 200
4812270235 200
4812270236 200
4812270237 200
4812270238 200
4812270239 200
4812270240 200
4812270266 252
4812270268 252
4812270269 252
4812270270 252
4812270273 252
4812270274 252
4812270275 252
4812270277 252
4812270278 252
4812270279 340
4812270280 234
4812270342 376
4812270343 378
4812270344 378
4812270345 378
4812270346 378
4812270347 378
4812270348 378
4812270349 376
4812274581 194
4812274582 194
4812274583 194
4812274584 194
4812274585 194
4812274586 194
4812274587 194
4812274588 194
4812313046 354
4812313143 360
4812313144 360
4812313145 360
4812313146 360
4812313147 360
4812313153 . . . . . 208, 230
4812313162 60
4812313168 74
4812313169 74
4812313170 74
4812313428 . . . . . 492, 498
5530766300 500
5530774600 . . . . . 500, 502
5530999900 . . . . . 66, 70, 100, 102
5540084600 . . . . . 36, 86, 520
5540127900 468
5540164900 . . . . . 402, 468
5540165300 104
5540204700 . . . . . 104, 434, 440, 448
5540417700 512
5541396800 104
5730006245 94
5730007580 468
5730007616 . . . . . 104, 434, 440, 446, 448, 466
5730007674 . . . . . 106, 120, 122
5730008013 . . . . . 66, 86, 100, 102, 202
5730015118 . . . . . 144, 152, 158, 176, 180, 192, 396, 532
5730015168 . . . . . 64, 396
5730015260 64
5730015470 80
5730082735 468
5730082761 86
934803416 536
D110080101 104
D299010014 . . . . . 4, 18
D380001258 418
D380001259 424
D439083600 . . . . . 458, 542
D439086503 . . . . . 462, 542
D439086506 462
D499018630 534
D570130609 . . . . . 460, 542
D635170072 . . . . . 460, 542
D635170074 . . . . . 460, 542
D635170076 . . . . . 462, 542
D635170078 . . . . . 462, 542
D635170080 . . . . . 460, 462, 542
D716031542 512

D716031553 512
D716090507 518
D716090528 516
D717011014 404
D717011016 404
D717011501 528
D717011523 68
D717012501 72
D717040509 80
D717060504 . . . . . 40, 46, 94
D717061001 . . . . . 28, 88
D717061003 . . . . . 40, 46, 92
D717061004 . . . . . 40, 46, 92
D717061012 90
D717061022 . . . . . 40, 92
D717061023 . . . . . 40, 92
D717061027 . . . . . 50, 96
D717061035 90
D717061501 26
D717064511 96
D717064512 96
D717064513 96
D717080023 270
D717081527 202
D717081528 202
D717081533 202
D717082009 . . . . . 174, 178
D717082016 . . . . . 174, 178
D717083019 62
D717083508 . . . . . 286, 290
D717083514 . . . . . 286, 290
D717083521 . . . . . 286, 290
D717083530 . . . . . 286, 290
D717083531 . . . . . 286, 290
D717083538 . . . . . 286, 290
D717084545 270
D717084546 270
D717084548 270
D717084551 270
D717084554 270
D717085041 196
D717085054 196
D717085061 196
D717085078 198
D717085102 196
D717090502 . . . . . 234, 246
D717090503 260
D717090505 . . . . . 248, 260
D717091001 234
D717091020 486
D717091021 . . . . . 72, 180, 486
D717091026 236
D717091027 236
D717091501 234
D717091503 234
D717091507 248
D717091508 264
D717093506 234
D717100501 358
D717100502 362
D717100505 358
D717100506 358
D717101007 364
D717101010 370
D717101011 370
D717101013 . . . . . 56, 370
D717101014 174
D717101015 370
D717101016 354
D717101018 370
D717101019 . . . . . 354, 392
D717101020 354
D717101024 56
D717101025 56
D717101026 56
D717101027 56
D717101029 368
D717101030 368
D717101031 354
D717101032 368
D717101033 368
D717101034 368
D717101035 368
D717101038 368
D717101043 374
D717101044 . . . . . 288, 292, 370
D717101045 . . . . . 56, 370
D717101046 . . . . . 56, 370
D717101047 . . . . . 56, 370
D717101048 . . . . . 56, 370
D717101049 368
D717101052 368
D717101055 354
D717101501 . . . . . 372, 380
D717101502 . . . . . 372, 380
D717101503 . . . . . 372, 380
D717101504 . . . . . 372, 380
D717101505 . . . . . 372, 380
D717101508 354
D717101509 . . . . . 56, 234
D717101515 364
D717101516 392

D717101517 392
D717102002 390
D717102005 390
D717102502 522
D717102503 522
D717102504 522
D717102505 522
D717102507 522
D717102508 522
D717102509 522
D717102510 522
D717102511 522
D717102513 522
D717102514 522
D717102515 522
D717102516 522
D717102517 522
D717103001 . . . . . 56, 372, 380
D717103002 372
D717103003 . . . . . 56, 372, 380, 506
D717103005 372
D717103006 372
D717103009 . . . . . 372, 380
D717103010 . . . . . 56, 372, 380
D717103011 . . . . . 56, 372, 380
D717103013 . . . . . 366, 372, 380
D717103014 . . . . . 372, 380
D717103015 . . . . . 56, 372, 380
D717103016 . . . . . 56, 364, 372, 380
D717103017 . . . . . 56, 364
D717103018 . . . . . 56, 372
D717103021 . . . . . 56, 372, 380
D717103022 . . . . . 56, 372
D717103025 . . . . . 372, 380
D717103026 . . . . . 364, 374, 380
D717103029 . . . . . 374, 382
D717103030 . . . . . 374, 382
D717103032 . . . . . 374, 382
D717103033 . . . . . 374, 382
D717103035 . . . . . 374, 382
D717103036 . . . . . 374, 382
D717103502 380
D717103503 380
D717104003 364
D717104004 364
D717104005 . . . . . 56, 364
D717104006 . . . . . 56, 364
D717104007 364
D717104008 364
D717104010 364
D717104011 364
D717104012 366
D717104013 366
D717104014 366
D717104015 366
D717104016 364
D717104017 . . . . . 364, 384, 400
D717104021 366
D717104022 366
D717104023 364
D717104029 364
D717104033 364
D717104037 364
D717104038 . . . . . 210, 232, 364
D717104039 364
D717104041 . . . . . 56, 364
D717104042 364
D717104500 354
D717104503 384
D717104504 384
D717104505 384
D717104506 384
D717104507 384
D717104508 384
D717104509 384
D717104511 384
D717104515 384
D717104516 . . . . . 72, 384, 392
D717104517 384
D717104519 384
D717104520 384
D717104521 400
D717104522 384
D717104523 384
D717104524 400
D717105503 386
D717105504 386
D717105505 386
D717105507 386
D717111535 144
D717111580 144
D717113021 . . . . . 138, 142
D717113024 . . . . . 372, 380
D717113043 62
D717113047 . . . . . 138, 142
D717146000 354
D717170547 228
D717170550 228
D717170600 212
D717170603 228
D717170626 228
D717170628 226

D717170629 226
D717170630 . . . . . 208, 230
D717171014 212
D717172928 . . . . . 210, 232
D717172929 . . . . . 210, 232
D717180034 472
D717180035 472
D717190001 294
D717190002 294
D717190003 294
D717190004 294
D717190006 294
D717191000 294
D717191500 294
D717192500 294
D717193001 294
D717193500 294
D717410002 406
D717410003 406
D717410004 406
D717410005 406
D717410007 372
D717410008 372
D717410010 380
D717410012 380
D717410014 370
D717410023 406
D717410024 370
D717410025 370
D717410026 370
D717410027 406
D717410028 406
D717410029 384
D717800001 236
D717800008 270
D717800015 260
D717800029 . . . . . 248, 254, 516
D717800043 . . . . . 248, 500
D717800057 248
D717800064 248
D717800066 198, 212, 236, 248, 254, 260, 264, 284, 352, 502, 516
D717800085 . . . . . 270, 284, 352
D717800099 . . . . . 352, 516, 518
D717800113 264
D717800134 . . . . . 212, 352
D717800148 352
D717800155 . . . . . 212, 352
D717800176 . . . . . 264, 272, 352
D717800211 352
D717800218 . . . . . 248, 270, 352
D717800246 . . . . . 248, 254, 502, 516, 518
D717800260 260
D717800281 . . . . . 212, 248, 352
D717800288 352
D717800295 . . . . . 236, 284, 516
D717800323 . . . . . 254, 260, 270, 516, 528
D717800344 236
D717800365 236
D717800372 . . . . . 236, 254, 516
D717800379 . . . . . 234, 254
D717800386 234
D717800393 248
D717800442 . . . . . 176, 180
D717800449 . . . . . 176, 178
D717800470 . . . . . 176, 178
D717800484 . . . . . 294, 358
D717800505 . . . . . 176, 180
D717800554 234
D717800568 398
D717800617 532
D717800638 528
D717800645 528
D717800666 364
D717800680 . . . . . 384, 392, 400
D717800687 . . . . . 364, 370, 374, 382, 400
D717800736 . . . . . 138, 142, 294, 358
D717800757 294
D717800785 . . . . . 364, 370, 374, 382, 384, 400
D717800820 . . . . . 144, 196, 512
D717800827 . . . . . 138, 142
D717800841 42
D717800862 . . . . . 138, 142
D717800869 . . . . . 364, 384
D717800876 . . . . . 372, 380, 392, 400
D717800883 . . . . . 144, 366, 374, 382, 384, 400
D717800897 . . . . . 370, 398
D717800946 364
D717800953 . . . . . 364, 384
D717800967 364
D717800974 . . . . . 372, 380
D717801002 . . . . . 144, 374, 382
D717801009 . . . . . 384, 400
D717801016 366
D717801044 . . . . . 372, 380
D717801051 . . . . . 138, 142, 398
D717801058 . . . . . 364, 370, 372, 380, 384, 392, 400
D717801065 . . . . . 398, 542
D717801072 . . . . . 42, 528
D717801086 . . . . . 50, 138, 142, 294, 358
D717801093 . . . . . 364, 384
D717801100 . . . . . 372, 380, 392, 400

D717801128 294
D717801135 . . . . . 294, 358
D717801142 . . . . . 144, 366, 370, 374, 382, 384, 398, 400
D717801177 234
D717801184 . . . . . 374, 382
D717801205 528
D717801240 370
D717801247 398
D717801261 . . . . . 374, 382
D717801268 . . . . . 372, 380
D717801289 . . . . . 372, 380
D717801296 370
D717801380 392
D717801401 248
D717801408 352
D717801415 . . . . . 254, 352
D717801436 42
D717801443 64
D717801513 400
D717801520 . . . . . 374, 382
D717801534 212
D717801541 528
D717801583 292
D717801618 370
D717801681 294
D717801688 294
D717801723 512
D717801849 400
D717801877 . . . . . 190, 294
D717801912 . . . . . 130, 236, 284, 500, 510
D717801933 . . . . . 196, 202
D717801968 . . . . . 264, 270
D717801989 236
D717802024 . . . . . 286, 290
D717802038 270
D717802045 196
D717802059 272
D717802192 352
D717802276 . . . . . 254, 502, 516
D717802290 . . . . . 254, 272
D717802304 . . . . . 236, 254, 264, 272, 284, 502
D717802346 352
D717802619 . . . . . 210, 232
D717802689 198
D717852822 330
D717900501 528
D717900502 528
D717900503 528
D717900504 528
D717900505 528
D717900506 528
D717905000 394
D717905001 400
D717905002 400
D717905003 400
D717905004 400
D717905005 400
D717905006 . . . . . 384, 400
D717905007 400
D717905008 400
D717906000 394
D717906001 392
D717906002 392
D717906003 392
D717906004 392
D717906005 392
D717906006 392
D717906009 392
D717906014 392
D717906015 392
D717906501 396
D717906503 396
D717906505 396
D717909501 398
D717909502 398
D717909503 398
D717909505 . . . . . 352, 398
D717909507 . . . . . 152, 398
D717909508 398
D717909509 398
D717909511 398
D717909516 . . . . . 196, 286, 290, 398
D717909517 398
D717909518 398
D717909519 398
D717909520 398
D717909521 398
D717920002 278
D717920009 278
D717920016 278
D717920023 278
D717920030 278
D717920037 278
D717920079 278
D717920086 278
D717920156 278
D717920163 278
D717920177 278
D717920191 278
D717920219 278
D717920226 278
D717920331 278

D717920352 278
D717920625 278
D717920632 42
D717920702 528
D717950001 328
D717950057 328
D717950064 328
D717950071 328
D717950078 328
D717950085 328
D717950092 328
D717950099 328
D717950106 328
D717950113 . . . . . 304, 316, 342
D717950120 . . . . . 304, 316, 342
D717950127 . . . . . 304, 316, 342
D717950148 262
D717950155 262
D717950162 262
D717950169 262
D717950218 328
D717950225 328
D717950232 328
D717950239 328
D717950246 328
D717950253 . . . . . 304, 316, 342
D717950267 328
D717950274 328
D717950281 328
D717950288 . . . . . 304, 316, 342
D717950295 . . . . . 304, 316, 342
D717950302 . . . . . 304, 316, 342
D717950309 . . . . . 304, 316, 342
D717950316 . . . . . 304, 316, 342
D717950323 . . . . . 304, 316, 342
D717950330 . . . . . 304, 316, 342
D717950337 . . . . . 304, 342
D717950344 316
D717950351 . . . . . 304, 316, 342
D717950358 . . . . . 328, 342
D717950365 304
D717950372 . . . . . 304, 316, 342
D717950379 . . . . . 304, 316, 342
D717950386 328
D717950393 328
D717950400 328
D717950407 328
D717950428 328
D717950435 328
D717950540 338
D717950547 . . . . . 304, 316
D717950554 . . . . . 304, 316, 342
D717950561 . . . . . 304, 316, 342
D717950568 . . . . . 304, 316, 342
D717950575 . . . . . 304, 316, 342
D717950582 . . . . . 304, 316, 342
D717950589 . . . . . 304, 316, 342
D717950596 . . . . . 304, 342
D717950603 . . . . . 304, 316, 342
D717950610 . . . . . 304, 316, 342
D717950624 . . . . . 304, 316, 342
D717950638 328
D717950645 . . . . . 304, 316, 342
D717950652 266
D717950701 . . . . . 304, 316, 342
D717950708 262
D717950715 266
D717950722 266
D717950743 240
D717950750 244
D717950757 . . . . . 234, 242
D717950764 . . . . . 234, 242
D717950771 240
D717950778 218
D717950785 218
D717950792 . . . . . 218, 328
D717950799 218
D717950806 218
D717950813 218
D717950827 218
D717950834 218
D717950855 218
D717950862 218
D717950869 218
D717950876 218
D717950883 218
D717950890 218
D717950897 218
D717950904 218
D717950911 218
D717950918 218
D717950925 218
D717950932 218
D717950939 218
D717950946 218
D717950953 218
D717950960 218
D717950967 218
D717950974 218
D717950981 218
D717950988 218
D717950995 218

D717951002 218
D717951009 218
D717951016 218
D717951037 218
D717951044 218
D717951051 218
D717951058 218
D717951065 . . . . . 218, 304, 316, 328, 342
D717951072 . . . . . 220, 304, 316, 328, 342
D717951079 . . . . . 220, 304, 316, 328, 342
D717951086 . . . . . 220, 304, 316, 342
D717951093 . . . . . 220, 304, 316, 328, 342
D717951107 220
D717951114 220
D717951121 220
D717951128 220
D717951135 . . . . . 6, 10, 270, 274
D717951142 . . . . . 270, 274
D717951156 214
D717951163 214
D717951170 214
D717951177 214
D717951184 214
D717951191 214
D717951198 214
D717951205 214
D717951212 214
D717951219 214
D717951247 56
D717951317 214
D717951324 214
D717951331 214
D717951338 214
D717951345 214
D717951352 214
D717951359 214
D717951366 214
D717951373 214
D717951380 214
D717951387 214
D717951394 214
D717951401 214
D717951408 214
D717951415 214
D717951422 214
D717951429 214
D717951436 214
D717951443 214
D717951450 214
D717951457 214
D717951464 214
D717951471 214
D717951478 214
D717951485 214
D717951492 214
D717951499 214
D717951506 216
D717951513 216
D717951520 216
D717951527 216
D717951534 216
D717951541 216
D717951548 216
D717951555 216
D717951562 216
D717951569 216
D717951576 216
D717951583 216
D717951590 216
D717951597 216
D717951604 216
D717951611 216
D717951618 216
D717951625 216
D717951632 216
D717951639 244
D717951695 56
D717951884 60
D717952374 28
D717952703 256
D717952710 256
D717952717 256
D717952724 328
D717952731 328
D717952738 328
D717952745 328
D717952752 328
D717952759 328
D717952766 328
D717952773 330
D717952780 330
D717952787 330
D717952794 330
D717952801 330
D717952808 330
D717952815 330
D717952829 330
D717952836 330
D717952843 256
D717952850 256
D717952857 250
D717952864 256

D717952871 256
D717952885 256
D717952892 . . . . . 304, 316, 342
D717952913 330
D717952920 330
D717952941 330
D717952955 220
D717952962 330
D717952976 . . . . . 304, 316, 342
D717952983 . . . . . 304, 316, 342
D717952990 . . . . . 306, 316, 342
D717952997 . . . . . 306, 316, 344
D717953004 . . . . . 306, 318, 344
D717953011 . . . . . 306, 344
D717953018 . . . . . 306, 318, 344
D717953025 . . . . . 306, 318, 344
D717953032 . . . . . 306, 318, 344
D717953039 256
D717953046 256
D717953053 256
D717953067 . . . . . 306, 318, 344
D717953074 330
D717953081 256
D717953088 330
D717953095 330
D717953102 . . . . . 306, 318, 344
D717953109 . . . . . 306, 318, 344
D717953123 330
D717953130 330
D717953137 330
D717953284 . . . . . 306, 318, 344
D717953291 . . . . . 306, 318, 344
D717953305 . . . . . 306, 318, 344
D717953319 . . . . . 306, 318, 344
D717953326 . . . . . 306, 318, 344
D717953333 . . . . . 306, 318, 344
D717953340 344
D717953347 . . . . . 306, 318, 344
D717953354 . . . . . 306, 318, 344
D717953361 . . . . . 306, 318, 344
D717953368 . . . . . 306, 318, 344
D717953375 344
D717953382 306
D717953389 . . . . . 306, 318, 344
D717953410 . . . . . 306, 318, 344
D717953431 . . . . . 306, 318, 344
D717953438 . . . . . 306, 318, 344
D717953452 . . . . . 306, 318, 344
D717953459 . . . . . 306, 318, 344
D717953473 344
D717953480 306
D717953494 306
D717953501 . . . . . 306, 318, 344
D717953508 . . . . . 306, 318, 344
D717953515 . . . . . 306, 318, 344
D717953522 . . . . . 306, 318, 344
D717953529 . . . . . 306, 318, 344
D717953536 . . . . . 306, 318, 344
D717953543 330
D717953550 330
D717953557 220
D717953564 330
D717953578 330
D717953585 . . . . . 306, 318, 344
D717953599 330
D717953606 330
D717953613 . . . . . 306, 318, 344
D717953620 220
D717953627 330
D717953634 330
D717953641 . . . . . 308, 318, 344
D717953648 . . . . . 308, 318, 346
D717953669 . . . . . 308, 318, 346
D717953683 330
D717953690 250
D717953697 . . . . . 308, 318, 346
D717953739 250
D717953746 250
D717953753 250
D717953760 250
D717953774 250
D717953781 250
D717953788 250
D717953795 256
D717953802 256
D717953809 256
D717953816 256
D717953823 256
D717953858 . . . . . 308, 318, 346
D717953865 . . . . . 308, 320, 346
D717953872 346
D717953886 . . . . . 308, 318, 346
D717953907 320
D717953928 . . . . . 308, 320, 346
D717953935 346
D717953942 330
D717953949 . . . . . 308, 320, 346
D717953956 . . . . . 308, 320, 346
D717953963 330
D717953970 . . . . . 308, 320, 330, 346
D717953977 . . . . . 308, 320, 346
D717953984 330

D717953998 . . . . . 308, 320, 346
D717954005 . . . . . 308, 320, 346
D717954012 330
D717954019 . . . . . 308, 320, 346
D717954026 . . . . . 308, 320, 346
D717954033 330
D717954040 330
D717954047 . . . . . 308, 320, 346
D717954061 . . . . . 308, 346
D717954068 . . . . . 308, 320, 346
D717954075 . . . . . 308, 320, 346
D717954089 320
D717954103 . . . . . 308, 320, 346
D717954110 . . . . . 308, 320, 346
D717954117 . . . . . 308, 320, 346
D717954124 . . . . . 308, 320, 346
D717954138 220
D717954152 . . . . . 308, 320, 346
D717954159 . . . . . 308, 320, 346
D717954166 . . . . . 308, 320, 346
D717954173 256
D717954656 330
D717954663 302
D717954677 4
D717954747 234
D717954768 360
D717955090 . . . . . 4, 394
D722180000 472
D722180900 474
D722181600 474
D722181611 . . . . . 44, 478
D722181636 478
D722181643 478
D722181750 478
D722181900 20
D722182000 20
D722182100 538
D722182200 538
D722182300 538
D722182400 538
D722183400 474
D722183403 484
D722183411 484
D754111500 474
D754180506 476
D754180516 476
D756061106 480
D756061136 480
D756183201 480
D756183218 480
D756183300 474
D756183315 480
D772181750 18
D862180150 542
D862180182 542
D880180062 474
D880180063 474
D880180413 480
D880180419 480
D880180421 484
D880180422 484
D880180423 484
D880180480 480
D880180481 480
D880180482 480
D880180483 482
D880180749 478
D930205010 402
D930205111 . . . . . 460, 462, 542
D930206202 480
D930290105 . . . . . 458, 460, 542
D930435011 480
D930452560 480
D932211662 480
D932211691 . . . . . 18, 478
D932211701 . . . . . 44, 478
D932211745 484
D932211813 480
D932315443 116
D932323235 212
D932702032 104
D932776590 116
D935022420 . . . . . 18, 478
D935128427 . . . . . 44, 478
D935183934 . . . . . 44, 478
D935194411 . . . . . 18, 478
D935194413 . . . . . 18, 478
D935229705 480
D935229706 480
D935511210 478
D935513220 476
D936032392 480
D936034092 116
D936630040 480
D936750333 486
D936780017 474
D936790545 534
D936870016 158
D937860060 . . . . . 468, 478, 480
D937860264 480
D937890151 480
D938116929 . . . . . 90, 208, 212, 230

D938150770 . . . . . 66, 100, 102, 524
D938150986 64
D938155540 170
D938155547 . . . . . 80, 134, 144, 210, 232, 354
D938165668 . . . . . 176, 180
D938481615 480
D939142413 146
D939390333 108
D939515032 . . . . . 176, 178
D939570011 396
D939570014 . . . . . 160, 238
D939570522 468
D939776111 . . . . . 80, 180, 192, 210, 230
D939776113 . 36, 64, 86, 134, 180, 192, 208, 230, 386, 402, 492, 496, 498, 500, 512
D939776115 . 38, 80, 84, 88, 94, 134, 152, 158, 168, 176, 180, 192, 196, 208, 230, 236, 398, 512
D939776117 . . . 70, 130, 176, 178, 202, 210, 232, 502, 510, 524
D939776124 36, 86, 434, 440, 444, 446, 464, 466, 468, 512, 520
D939776129 . . . . . 90, 176, 178, 208, 212, 230, 402
D951260300 480
D956044900 406
D960969150 476
D960993190 476
D961134205 476
D961936205 476
D966057210 484
D990020153 . . . . . 460, 542
F1000T40014 2
F1000T40015 2

Any unauthorized use or copying of the contents or any part thereof is prohibited. This applies in particular to trademarks, model denominations, part numbers, and drawings.