CC900G

Spare parts list

Vibratory Roller

CC900G s/n 10000303xxC004465, 10000303xxC004716-004719;
10000382xxC005327 -
Engine: Loncin LC2V78F

© 2015 Dynapac (China) Compaction & Paving Equipment Co., Ltd | No. 4812274426| 2015-9

General information

Use only authorized parts. Any damage or malfunction caused by the use of unauthorized parts is not covered by Warranty or Product Liability.
Any unauthorized use or copying of the contents or any part thereof is prohibited. This applies in particular to trademarks, model denominations, part numbers, and drawings.

Instructions for use
This spare parts list contains no safety regulations and is merely intended to assist in the ordering of spare parts.
For information about operating, servicing, or repairing, the relevant Safety and operating instructions must be consulted at all costs.
Please observe the safety instructions listed in the relevant Safety and operating instructions!

Contents

CC900G (Loncin Engine) S/N 10000303X0C004465 -

CC900G (Loncin Engine) S/N 10000303x 0C004465 . . . 1

Service, repair kit

4812274605 Service kit, first 20 hours . . . 3
Service kit, first 50 hours . . . 5
4812274607 Service kit 200/400/600/800 hours . . . 7
Service kit, first 500 hours . . . 9
4812274609 Service kit, first 1000 hours . . . 11
4700940671 Scraper kit . . . 13
4700945551 Shock absorber kit, drum . . . 15
4700945928 Repair kit, Steering hitch . . . 17
4700945710 Eccentric shaft kit . . . 19
4700945711 Drum rotation kit . . . 21
4812269909 Steel fuel tank kit . . . 23

Mechanical

Frames

Frame . . . 25
4700387057 Hitch . . . 27
4700945928 Repair kit, Steering hitch . . . See page 17
Engine hood . . . 29
Scrapers . . . 32
Sprinkler system . . . 35

Operator platform

Drivers platform . . . 38
F/R- , throttle- and choke control . . . 41
Forward and reverse control handle . . . 43
Rops . . . 47
4700377256 Cup holder Option . . . 49

Engine

Engine, Loncin LC2V78F . . . 51
4812269818 Engine, Loncin LC2V78F . . . 53
Fuel system . . . 55

Drive

Drum . . . 57
Drum static . . . 61

Hydraulic system

Hydraulic propulsion and brake system motor

Hydraulic propulsion and brake system motor . . . 64
4700387270 Hydraulic motor . . . 67
Hydraulic propulsion and brake system pump . . . 69

Hydraulic vibration

Hydraulic vibration . . . 71
4812118170 Hydraulic motor . . . 75

Hydraulic steering

Hydraulic steering . . . 77
4700387274 Steering valve . . . 80
4700387275 Hydraulic cylinder . . . 83
Hydraulic cooling Option . . . 85

Electric system

Electrical equipment . . . 88
Back-up alarm Option . . . 93

Option / assessories

Decals 95
4812266106 Fuel oil gauge and display alarm option 97
4812268184 LED lamp option 99
Appendix B:Parts Index 101

CC900G (Loncin Engine) S/N 10000303X0C004465 - CC900G (Loncin Engine) S/N 10000303x 0C004465

Item	Part No.	Name	Qty	L	SN INFO
1		Service, repair kit	1		
2		Mechanical	1		
3		Operator platform	1		
4		Engine	1		
5		Motor	1		
6		Hydraulic system	1		
7		Electric system	1		
8		Option / assessories	1		

Service, repair kit 4812274605 Service kit, first 20 hours

NO EXPLODED VIEW
AVAILABLE
FOR THIS BOM

Item	Part No.	Name	Qty	L	SN INFO
0	4812274605	Service kit, first 20 hours			
1	4812274530	Oil filter assembly	1		
2	1615595300	Paroil E 5L	1		

Service, repair kit Service kit, first 50 hours

NO EXPLODED VIEW
AVAILABLE
FOR THIS BOM

Item	Part No.	Name	Qty	L	SN INFO
0		Service kit, first 50 hours			
1	4700376637	Hydraulic filter element	1		

Service, repair kit 4812274607 Service kit 200/400/600/800 hours

NO EXPLODED VIEW
AVAILABLE
FOR THIS BOM

Item	Part No.	Name	Qty	L	SN INFO
0	4812274607	Service kit 200/400/600/800 hours			
1	4812274530	Oil filter assembly	1		
2	4812274535	Spark plug	2		
3	4812274540	Fuel filter	1		
4	5580020624	Engine oil 100 / 5 ltr.	1		

Service, repair kit Service kit, first 500 hours

NO EXPLODED VIEW
AVAILABLE
FOR THIS BOM

Item	Part No.	Name	Qty	L	SN INFO
0		Service kit, first 500 hours			
1	4812274543	Filter element	1		

Service, repair kit 4812274609 Service kit, first 1000 hours

NO EXPLODED VIEW
AVAILABLE
FOR THIS BOM

Item	Part No.	Name	Qty	L	SN INFO
0	4812274609	Service kit, first 1000 hours			
1	4812274530	Oil filter assembly	1		
2	4812274535	Spark plug	2		
3	4812274540	Fuel filter	1		
4	4812274543	Filter element	1		
5	4700376637	Hydraulic filter element	1		
6	1615595300	Paroil E 5L	1		
7	4812008274	Gear oil 100 / 5 ltr.	1		

Service, repair kit 4700940671 Scraper kit

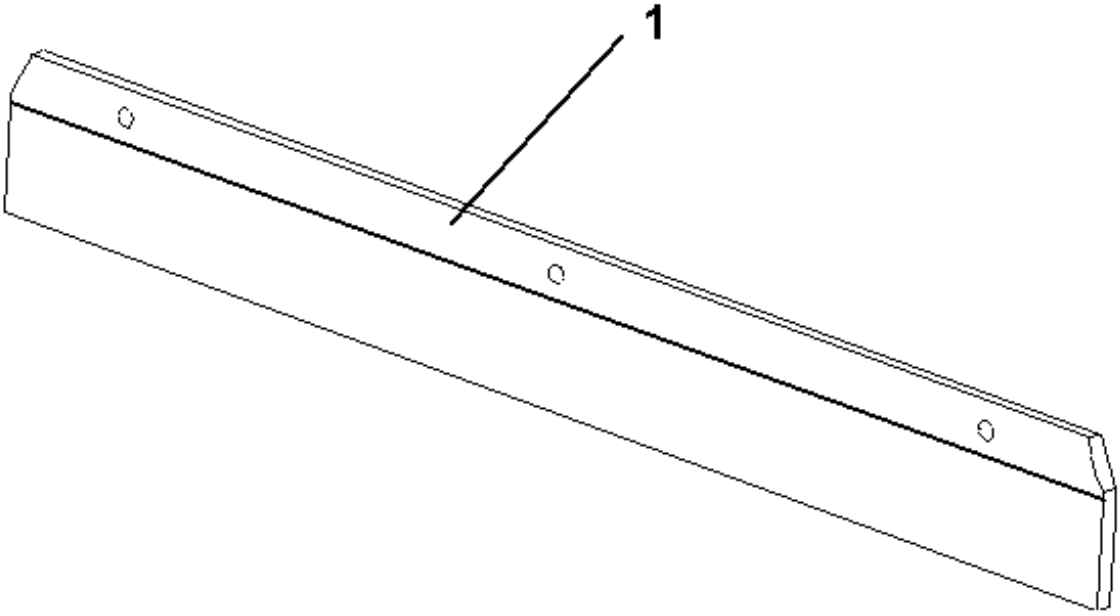

Item	Part No.	Name	Qty	L	SN INFO
0	4700940671	Scraper kit			
1	4812269392	Scraper blade	4	1	10000303T0C002957

Service, repair kit 4700945551 Shock absorber kit, drum

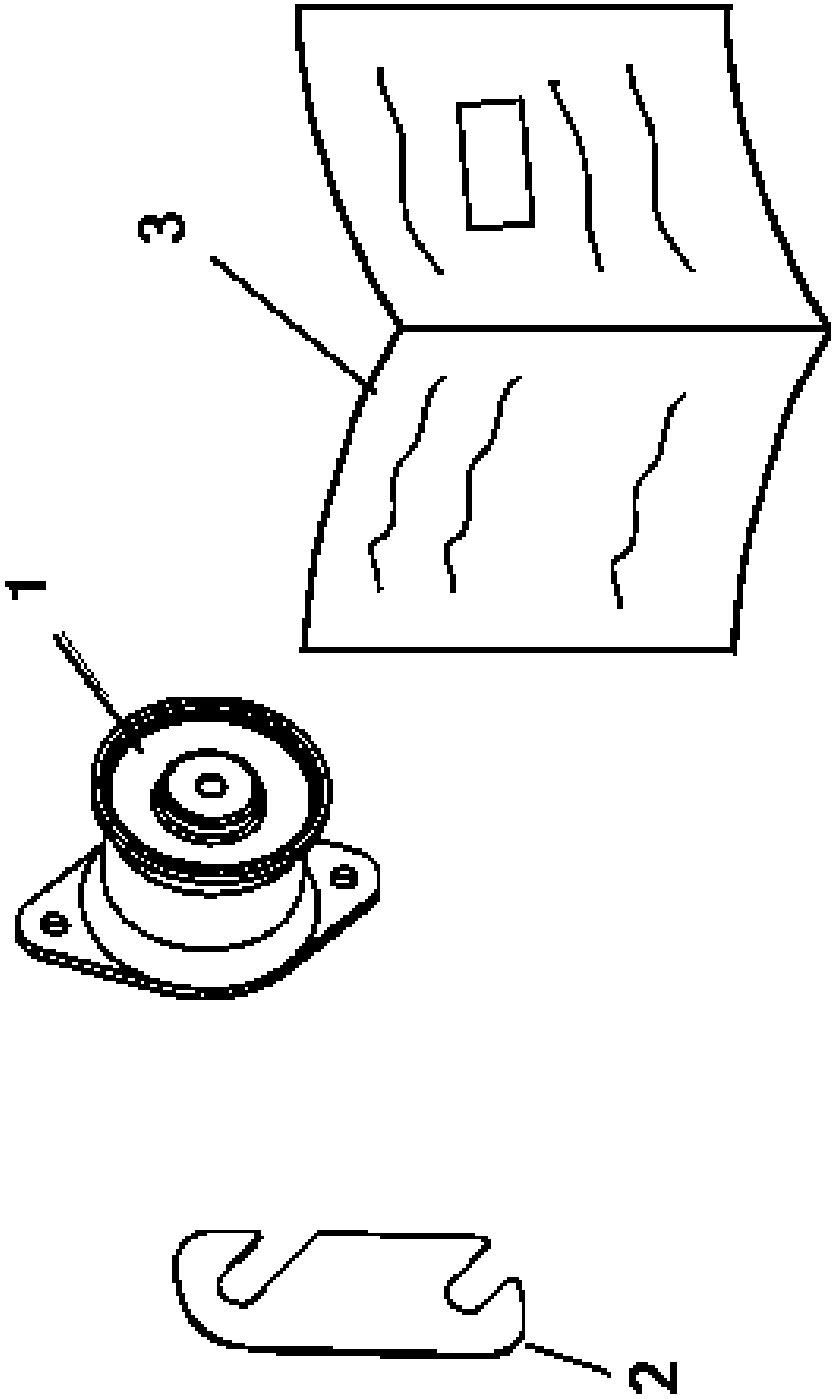

Item	Part No.	Name	Qty	L	SN INFO
0	4700945551	Shock absorber kit, drum			
1	4700391985	Shock absorber	7		From 88240485
2	4700387424	Shim	4		
3	4812156170	Instructions	1		

Service, repair kit 4700945928 Repair kit, Steering hitch

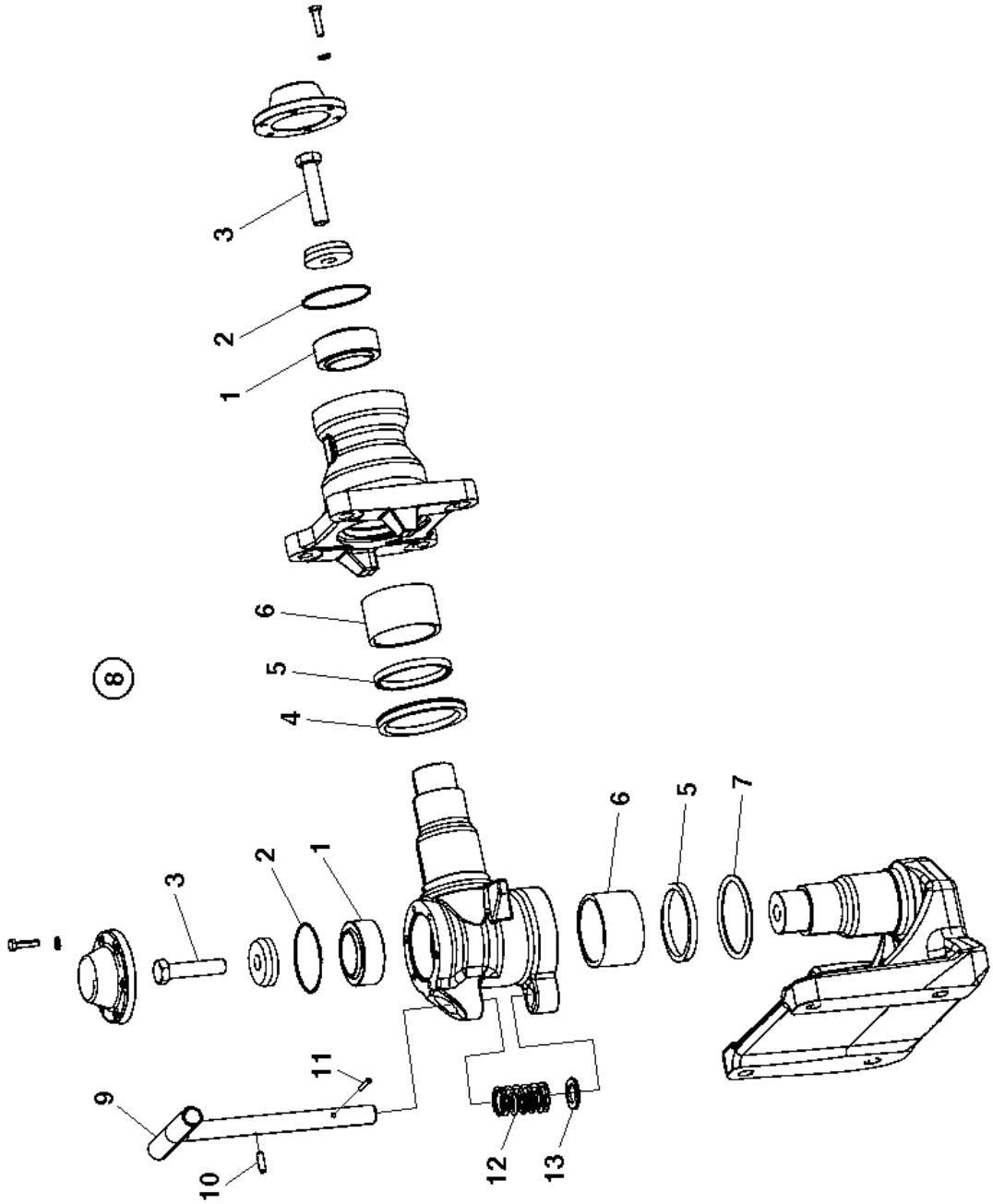

Item	Part No.	Name	Qty	L	SN INFO
0	4700945928	Repair kit, Steering hitch			
1	4700792611	Radial spherical plain bearing	2		
2	4700791962	O-ring	2		
3	4700500050	Screw	2		
4	4700388171	Sealing, V-ring	1		
5	4700388173	Shear wiper	2		
6	4700388172	Bushing	2		
7	4700160058	O-ring	1		

Service, repair kit 4700945710 Eccentric shaft kit

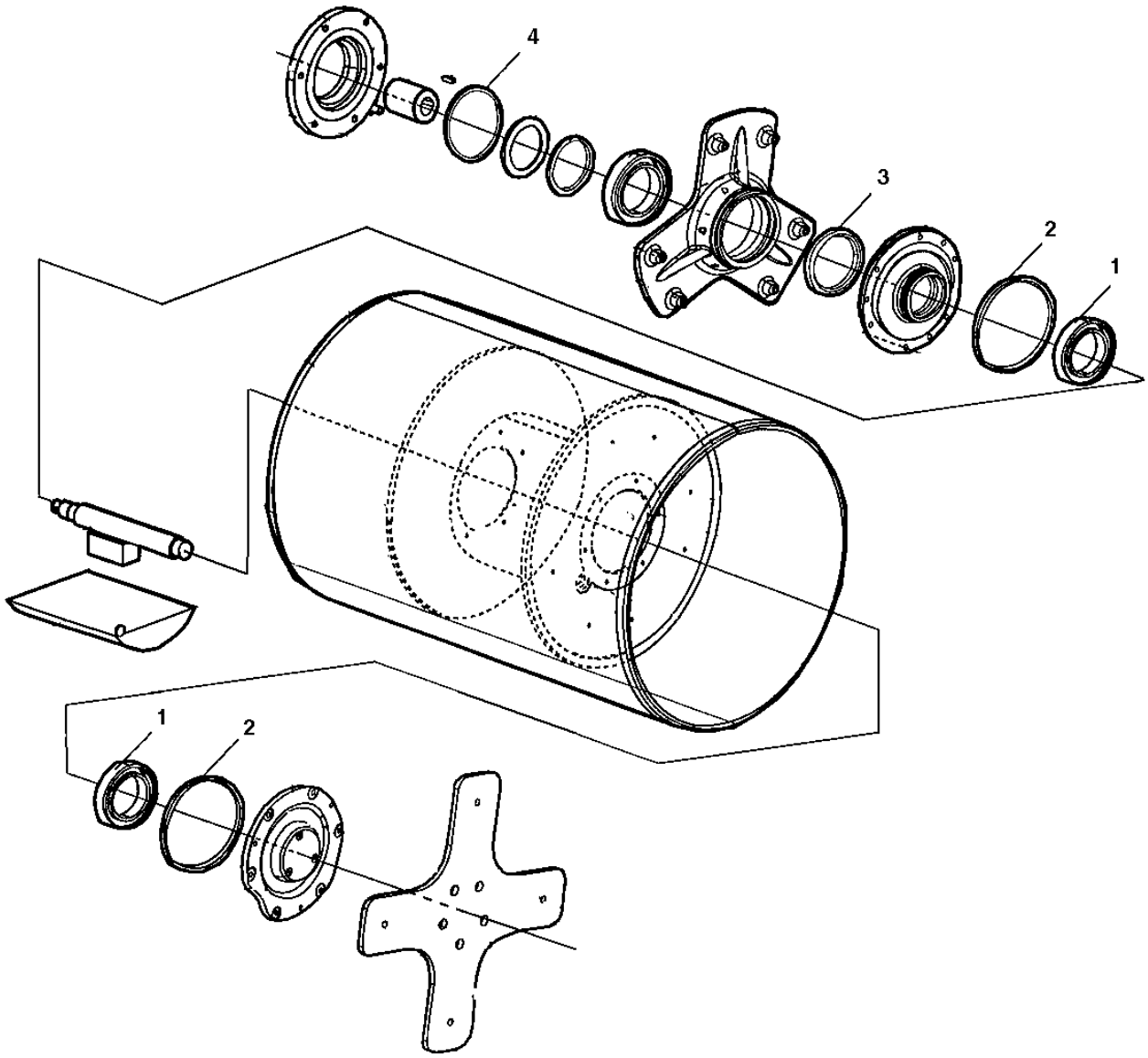

Item	Part No.	Name	Qty	L	SN INFO
0	4700945710	Eccentric shaft kit			
1	4700791433	Spherical roller bearing	2		
2	4700791425	O-ring 70	2		
3	4700791426	Radial lip seal	1		
4	4700160132	O-ring 70	1		

Service, repair kit 4700945711 Drum rotation kit

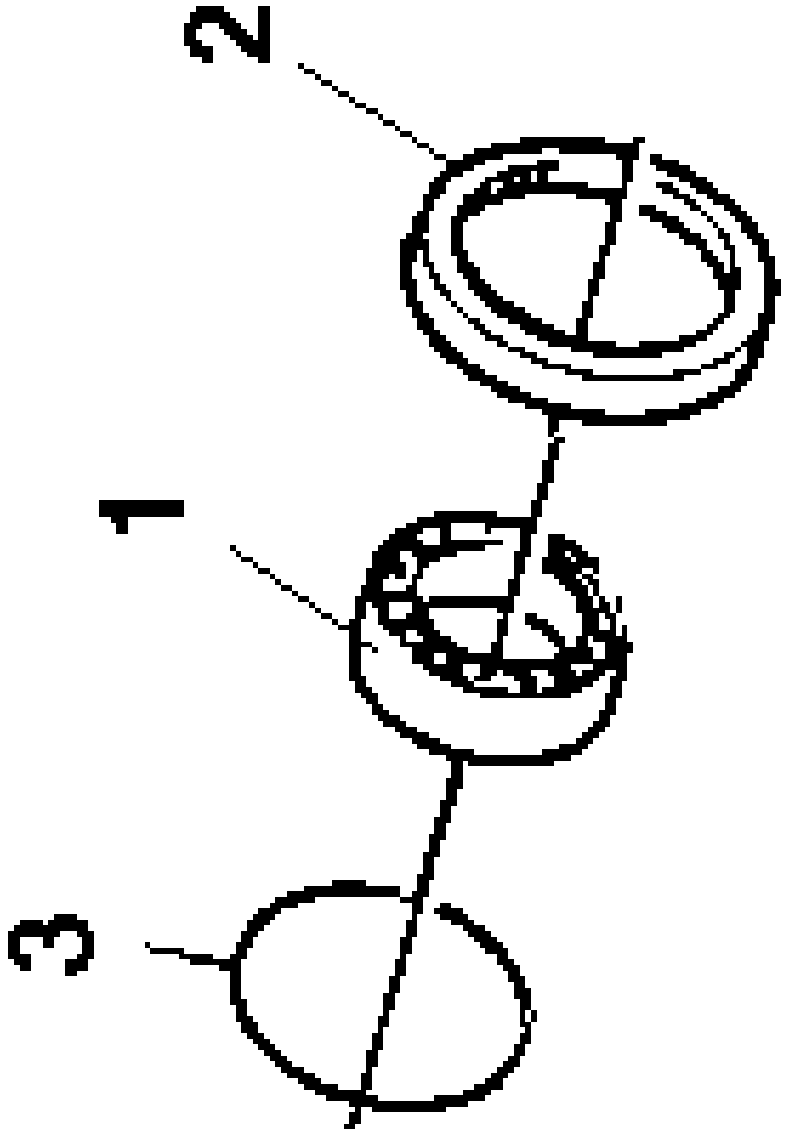

Item	Part No.	Name	Qty	L	SN INFO
0	4700945711	Drum rotation kit			
1	4700111018	Ball bearing	1		
2	4700791426	Radial lip seal	1		
3	4700160132	O-ring 70	1		

Service, repair kit 4812269909 Steel fuel tank kit

NO DRAWING
AVAILABLE
FOR THIS BOM

Item	Part No.	Name	Qty	L	SN INFO
1	4812269863	Oil level sensor	1	1	Since SN 10000303A0C003387
2	4812269864	Relay	2		
3	4812269865	Wiring harness	1		
4	4700313032	Clamp	1		
5	4700904137	Protection cap	1		

Frames Frame

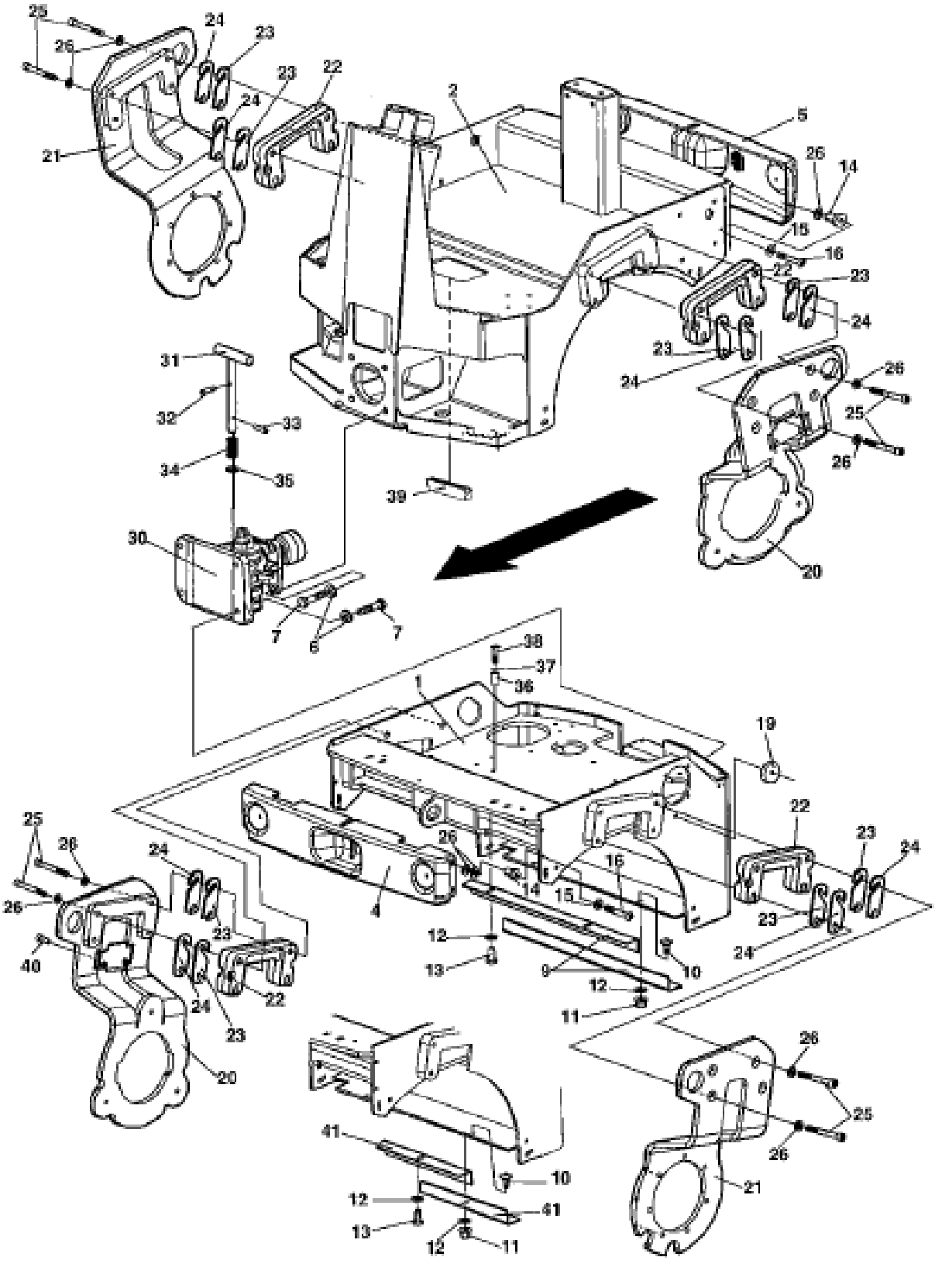

Item	Part No.	Name	Qty	L	SN INFO
1		Frame, front	1		
2		Frame, rear	1		
4	4700387376	Cover, frame	1		
5	4700387886	Cover, frame	1		
6	4700904214	Washer 15x30x4 300 HV	8		
7	4700500176	Screw M14x060	8		
9	4700387779	Press plate	2		
10	4700929191	Cup square neck bolt	1		
11	4700586003	Nut, M8	1		
12	4700904640	Washer, 8.4x22x3 mm 300HV	2		
13	4700500019	Hex. screw	1		
14	4700387949	Rubber nut	8		
15	4700904228	Washer 6.4x12x1.5 mm 300 HV	8		
16	4700792149	Screw M6x35 8.8	8		
17	4700500035	Hexagon screw, M12x20H	8		
18	4700926215	Protective plug	4		
19	-	Reflector	2		
20	4700388850	Fork, vibration side	2		
21	4700388849	Fork, drive side	2		
22	4700388153	Spacer	4		
23	4700387425	Shim	N		
24	4700387424	Shim	N		
25	4700791972	Screw M12x100	16		
26	4700904231	Steel plain washer, 13x24x2 mm 300 HV	16		
30	4700387057	Hitch	1		
31	4700387155	Clevis pin	1		
32	4700388177	Spring pin	1		
33	4700388176	Spring pin	1		
34	4700388178	Compression spring	1		
35	4700791961	Washer	1		
36	4700387677	Spacer sleeve	1		
37	4700904556	Steel plain washer	1		
38	4700500067	Screw	1		
39	4700902379	Edge trim	1		
40	4700926215	Protective plug	2		
41	4700379907	Bracket	2		

Frames 4700387057 Hitch

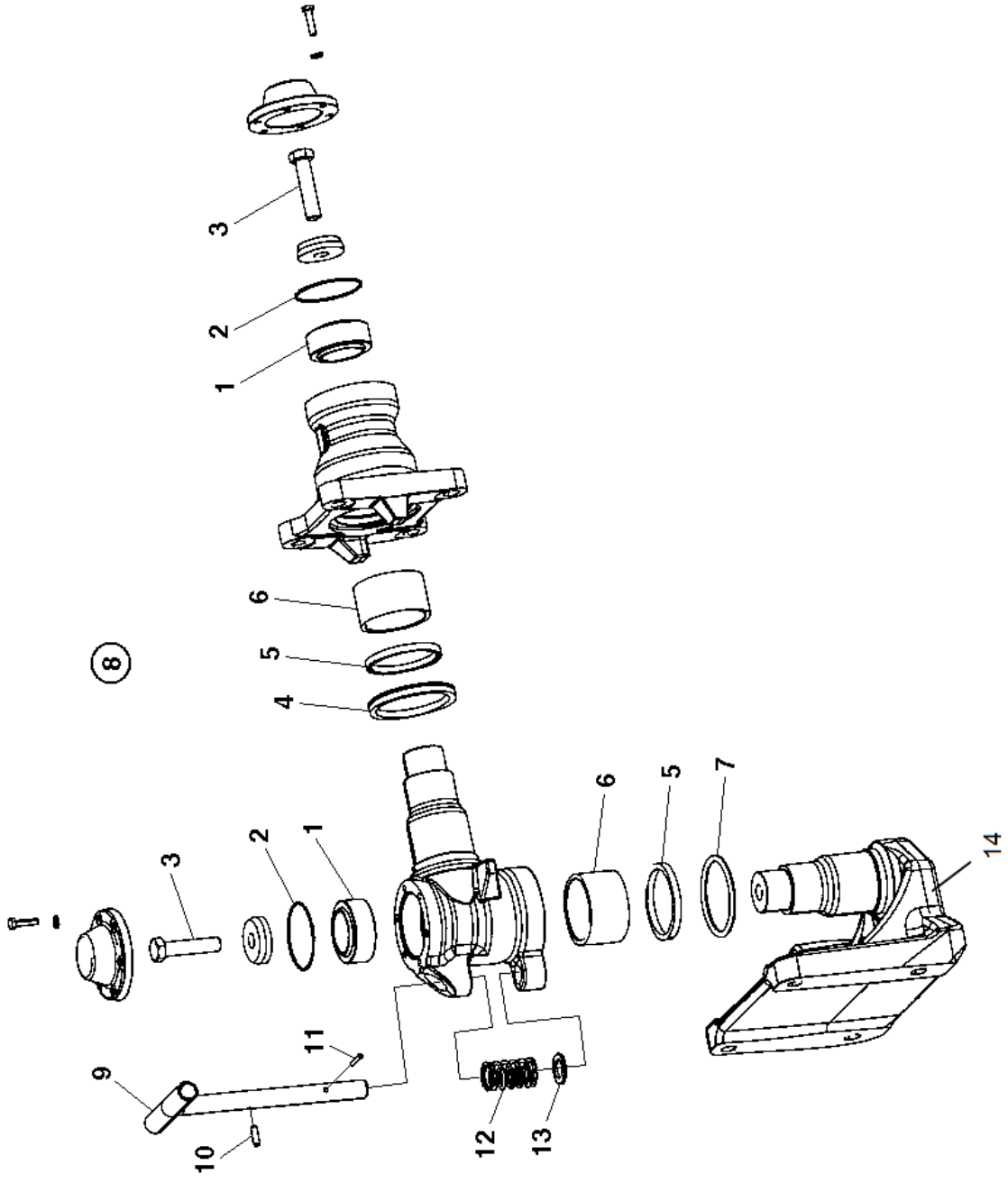

Item	Part No.	Name	Qty	L	SN INFO
1	4700792611	Radial spherical plain bearing	2		
2	4700791962	O-ring	2		
3	4700500050	Screw	2		
4	4700388171	Sealing, V-ring	1		
5	4700388173	Shear wiper	2		
6	4700388172	Bushing	2		
7	4700160058	O-ring	1		
8	4700945928	Repair kit, Steering hitch	1		
9	4700387155	Clevis pin	1		
10	4700388177	Spring pin	1		
11	4700388176	Spring pin	1		
12	4700388178	Compression spring	1		
13	4700791961	Washer	1		
14	4700377928	Steering joint link	1		

Mechanical Engine hood

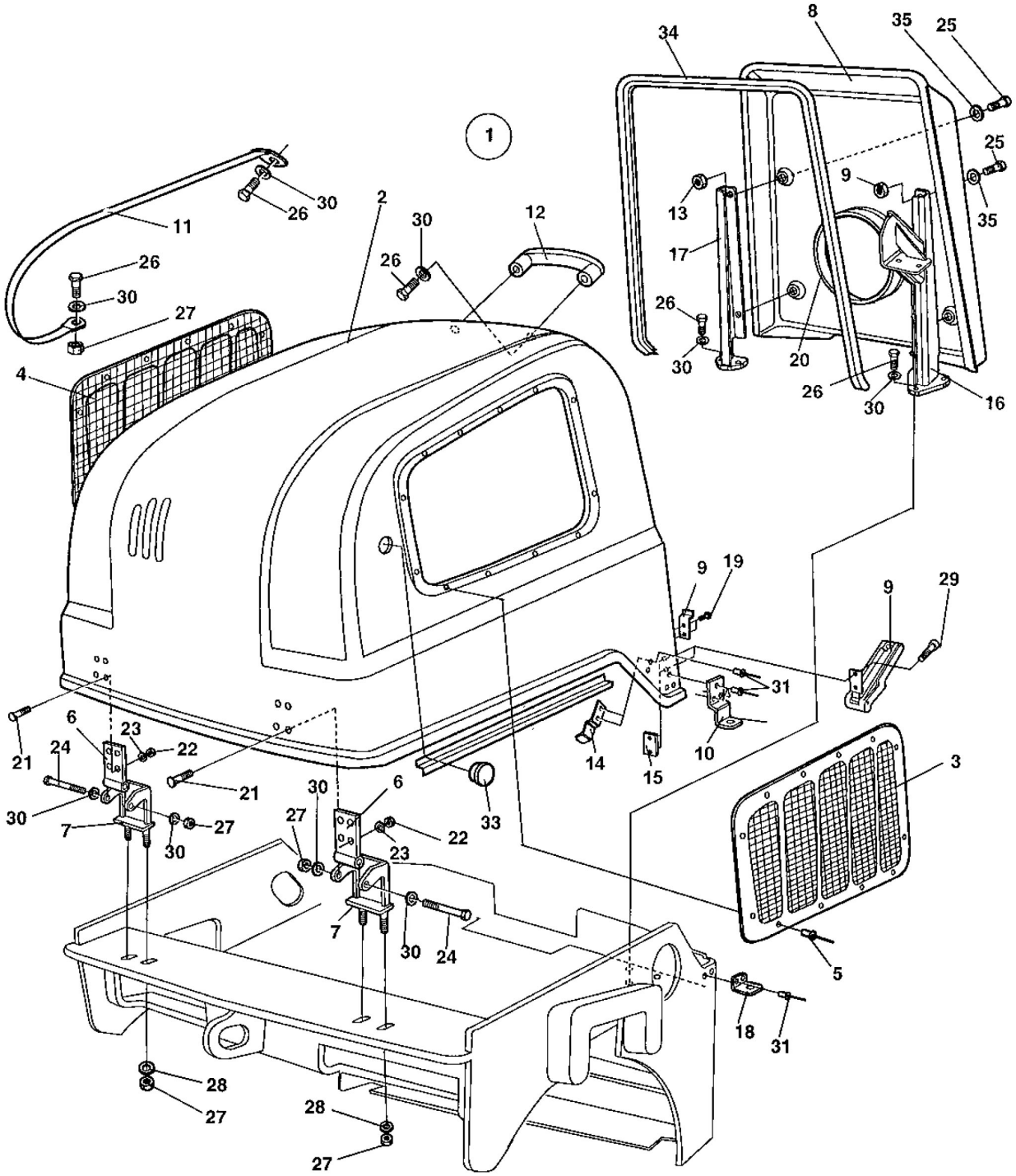

Item	Part No.	Name	Qty	L	SN INFO
1		Engine hood	1		
1	4812120570	Engine hood	1		
2	4700387147	Engine hood	1		
3	4700377043	Grid, left	1		
4	4700377044	Grid, right	1		
5	4700792132	Blind rivet	24		
6	4700387148	Hinge	2		
7	4700387151	Hinge	2		
8	4812111853	Cover	1		
9	4700388846	Latch, complete	2		
10	4700377061	Lock plate	1		
11	4700387947	Metal strapping	1		
12	4700387948	Handle	1		
13	4700387949	Rubber nut	4		
14	4700388733	Controlling plate	2		
15	4700387956	Lock plate	2		
16	4812270737	Cover bracket	1		
17	4812270738	Cover bracket	1		
18	4700388852	Lock plate	1		
19	4700791643	Screw	4		
20	4812270762	Edge trim	1	A	
21	4700903856	Bolt M06x30	8		
22	4700586002	Lock nut M6 -8	8		
23	4700904228	Washer 6.4x12x1.5 mm 300 HV	8		
24	4700500068	Screw M08x65	2		
25	4700792149	Screw M6x35 8.8	4		
26	4700500053	Screw, M8x20 mm 8.8 A2K	10		
27	4700586003	Nut, M8	7		
28	4700904556	Steel plain washer	4		
29	4700508022	Hexagon socket head cap screw	4		
30	4700904229	Steel plain washer	14		
31	4700791754	Blind rivet	9		
32	4700297018	Rubber strip	1	B	
33	4700923270	Protective plug	2		
34	4700902166	Edge trim	1	C	
35	4700928381	Washer, 6.4x18x1.6 mm	4		

Comments for Page: Engine hood

(L)OCAL REMARKS

A | en_US | L = 1,62 m

B | en_US | L = 0,90 m

C | en_US | L = 0,78 m

This page intentionally left blank

Mechanical Scrapers

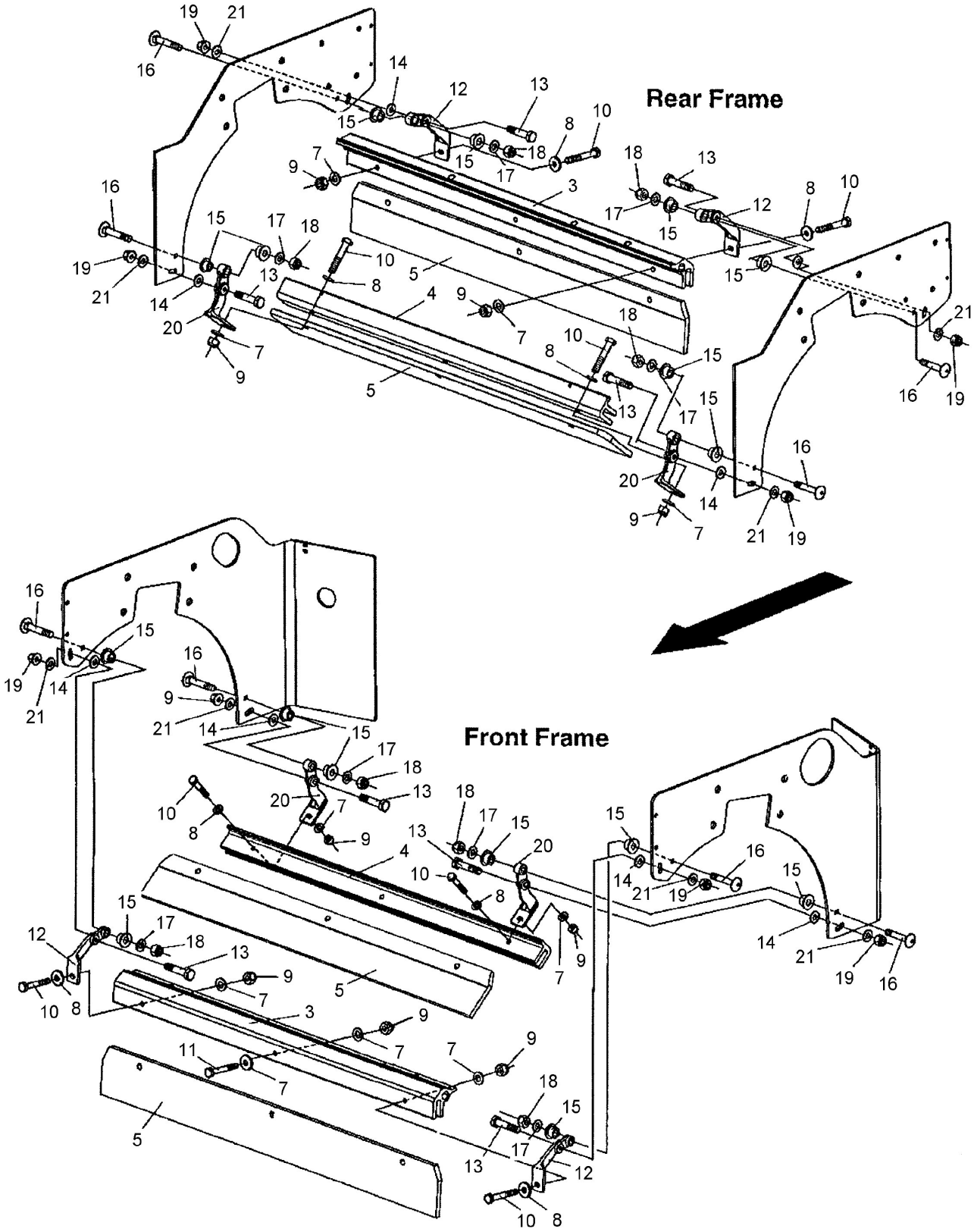

Item	Part No.	Name	Qty	L	SN INFO
3	4700377456	Sprinkler pipe	2		
4	4700387345	Scraper bracket	2		
5	4700387346	Scraper blade Polyurethan	4		
5	4812269392	Scraper blade	1		
7	4700904229	Steel plain washer	16		
8	4700904640	Washer, 8.4x22x3 mm 300HV	8		
9	4700586003	Nut, M8	12		
10	4700500067	Screw	8		
11	4700500024	Screw M8x45	4		
12	4700387039	Upper hold	4		
13	4700500105	Hex. screw	8		
14	4700791938	Washer	8		
15	4700791939	Bushing	16		
16	4700792134	Bolt	8		
17	4700904229	Steel plain washer	8		
18	4700586003	Nut, M8	8		
19	4700902287	Nut, M10	8		
20	4700387043	Lower hold	4		
21	4700791938	Washer	8		

Mechanical Sprinkler system

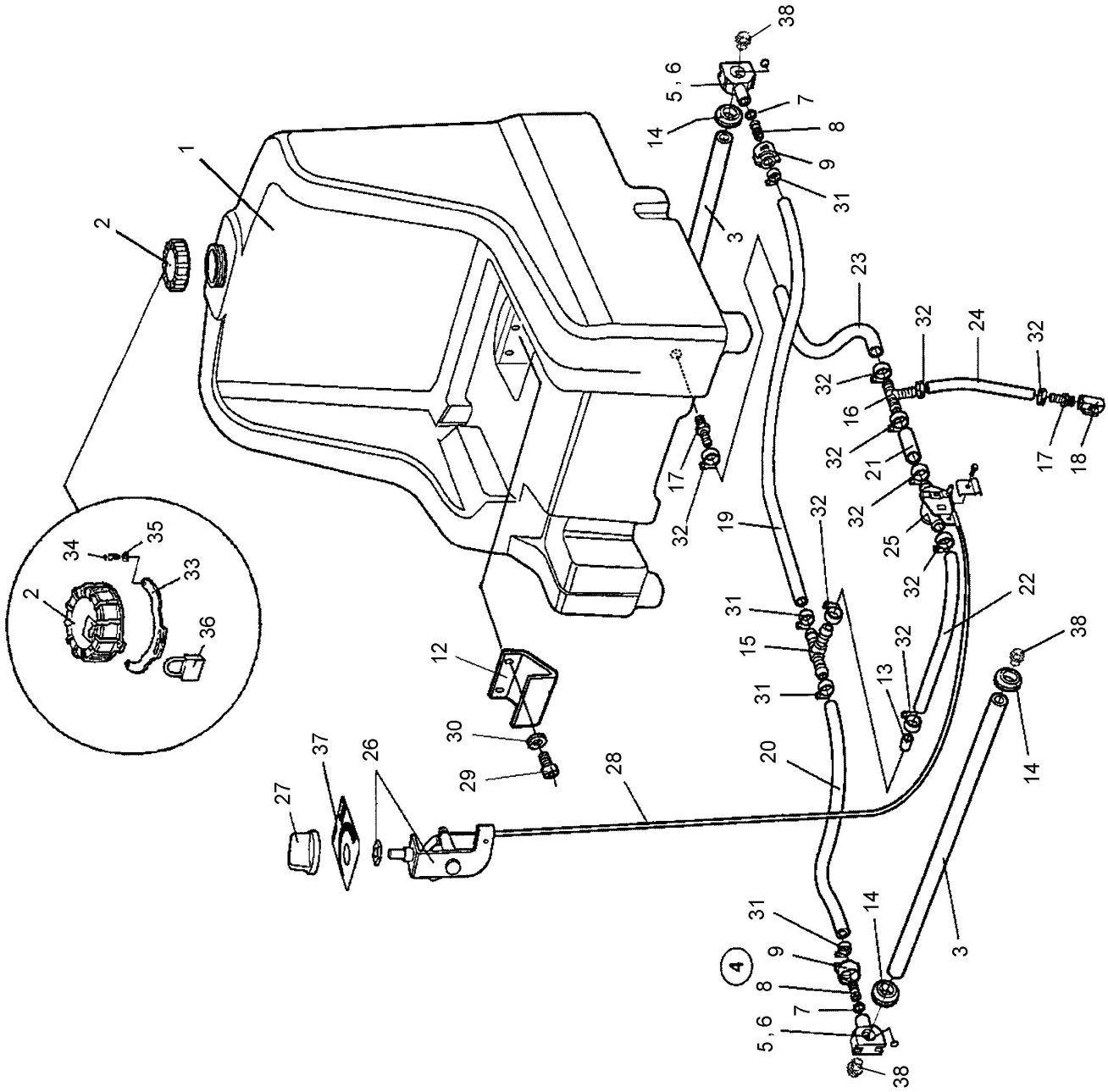

Item	Part No.	Name	Qty	L	SN INFO
1	4700389219	Water tank, cpl	1		
2	4700388087	Tank cap	1		
3	4700377456	Sprinkler pipe	2		
4	4700903959	Hose connection, cpl	2		
5	4700923680	Nozzle clamp	1		
6	4700923962	O-ring	1		
7	4700904116	Gasket	1		
8	4700903957	Hose connection	1		
9	4700903958	Coupling	1		
12	4700387935	Bracket	1		
13	4700377454	Hose	1	A	
14	4700903192	Grommet	4		
15	4700923735	Hose connection	1		
16	4700792065	Hose connection	1		
17	4700792064	Hose connection	2		
18	4700924986	Valve	1		
19	4812112074	Plastic hose (x m)	1	B	
20	4812112074	Plastic hose (x m)	1	C	
21	4700792073	Hose reinforced	1	D	
22	4700792073	Hose reinforced	1	E	
23	4700792073	Hose reinforced	1	F	
24	4700792073	Hose reinforced	1	G	
25	4700939693	Heater control valve	1		
26	4700377507	Rotary control	1		
27	4700377508	Knob	1		
28	4700377509	Cable	1		
29	4700500029	Hex. screw	2		
30	4700904567	Washer, 10.5 x 28 x 6 mm, 0.41 x 1.10 x 0.24 in. 300 HV	2		
31	4700313001	Hose clamp	4		
31	4700313002	Hose clamp	4		
32	4700313003	Hose clamp	8		
33	4700389155	Lock bracket	1	H	
34	4700904696	Screw	2	H	
35	4700904281	Washer, 5,3x10x1 300HV	2	H	
36	4700358881	Pad lock	1	H	
37	4700378244	Decal "SPRINKLER"	1		
38	4700901174	Plug	4		

Comments for Page: Sprinkler system

(L)OCAL REMARKS

A | en_US | L = 20 mm

B | en_US | L = 1000 mm

C | en_US | L = 1200 mm

D | en_US | L = 60 mm

E | en_US | L = 220 mm

F | en_US | L = 370 mm

G | en_US | L = 270 mm

H | en_US | Option

This page intentionally left blank

Operator platform Drivers platform

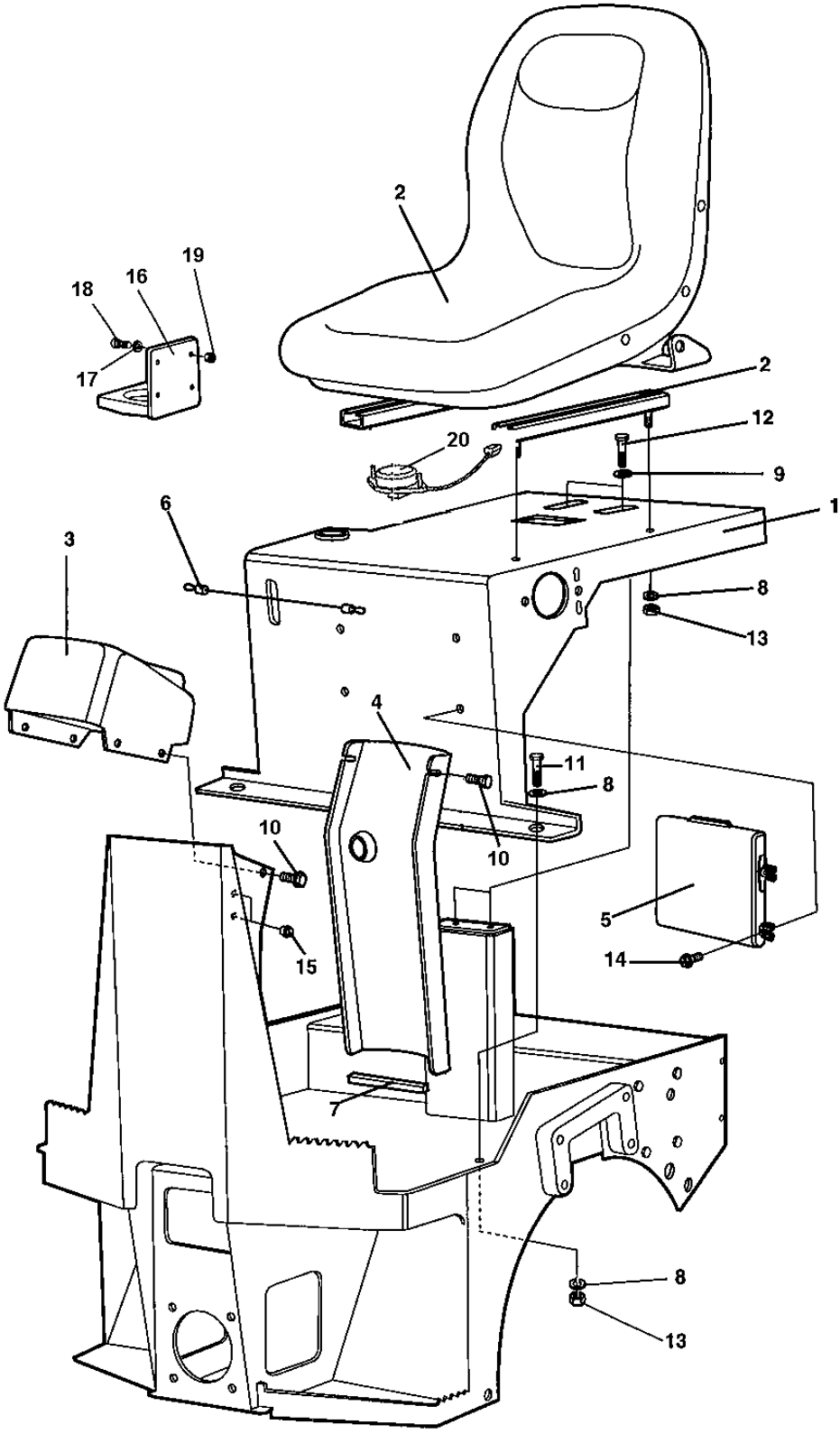

Item	Part No.	Name	Qty	L	SN INFO
1		Platform	1		
2	4700377556	Drivers seat, cpl	1		
2	4812114466	Drivers seat, cpl	1		
3	4700376595	Instrument panel	1		
4	4700387226	Column cover	1		
5	4700383705	Instruction manual box	1		
6	4700357643	Wire	1		
7	4700902166	Edge trim	1		
8	4700904229	Steel plain washer	8		
9	4700904557	Washer, 10.5x22x4 mm 300 HV	2		
10	4700904755	Screw M8x12 8,8 FZB	6		
11	4700500021	Hex. screw	2		
12	4700500030	Hexagon head screw M	2		
13	4700586003	Nut, M8	6		
14	4700791226	Screw	4		
15	4700902919	Plug	4		
16	4700377255	Cup holder	1	A	
17	4700904698	Steel plain washer	4	A	
18	4700513027	Screw M4x16H 10,9	4	A	
19	4700923976	Lock nut	4	A	
20	4700379635	Seat switch	1	B	
20	4812157468	Seat switch	1	C	

Comments for Page: Drivers platform

(L)OCAL REMARKS

A | en_US | Option

B | en_US | With bayonet fitting

C | en_US | With screws

Operator platform F/R- , throttle- and choke control

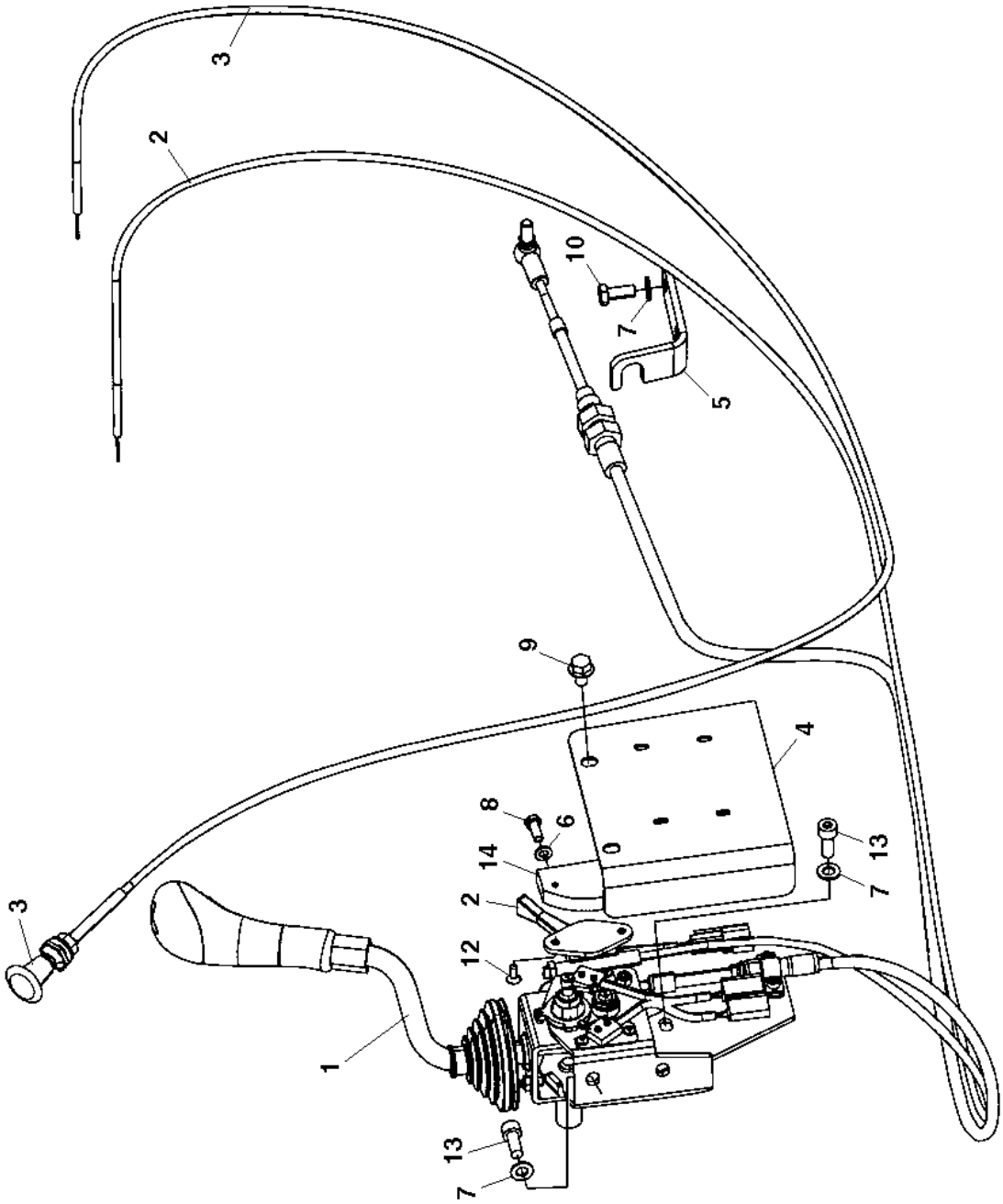

Item	Part No.	Name	Qty	L	SN INFO
1	-	Forward and reverse control handle CC900G	1		
2	4812111858	Throttle control	1		
3	4812111852	Choke control	1		
4	4700388476	Control cover	1		
5	4700388460	Control bracket	1		
6	4700904228	Washer 6.4x12x1.5 mm 300 HV	2		
7	4700904229	Steel plain washer	5		
8	4700500013	Hex. screw	2		
9	4700904755	Screw M8x12 8,8 FZB	2		
10	4700500053	Screw, M8x20 mm 8.8 A2K	2		
12	4700513004	Screw M5x12H 10.9	2		
13	4700508092	Screw	3		
14	4700393095	Bracket	1		

Operator platform Forward and reverse control handle

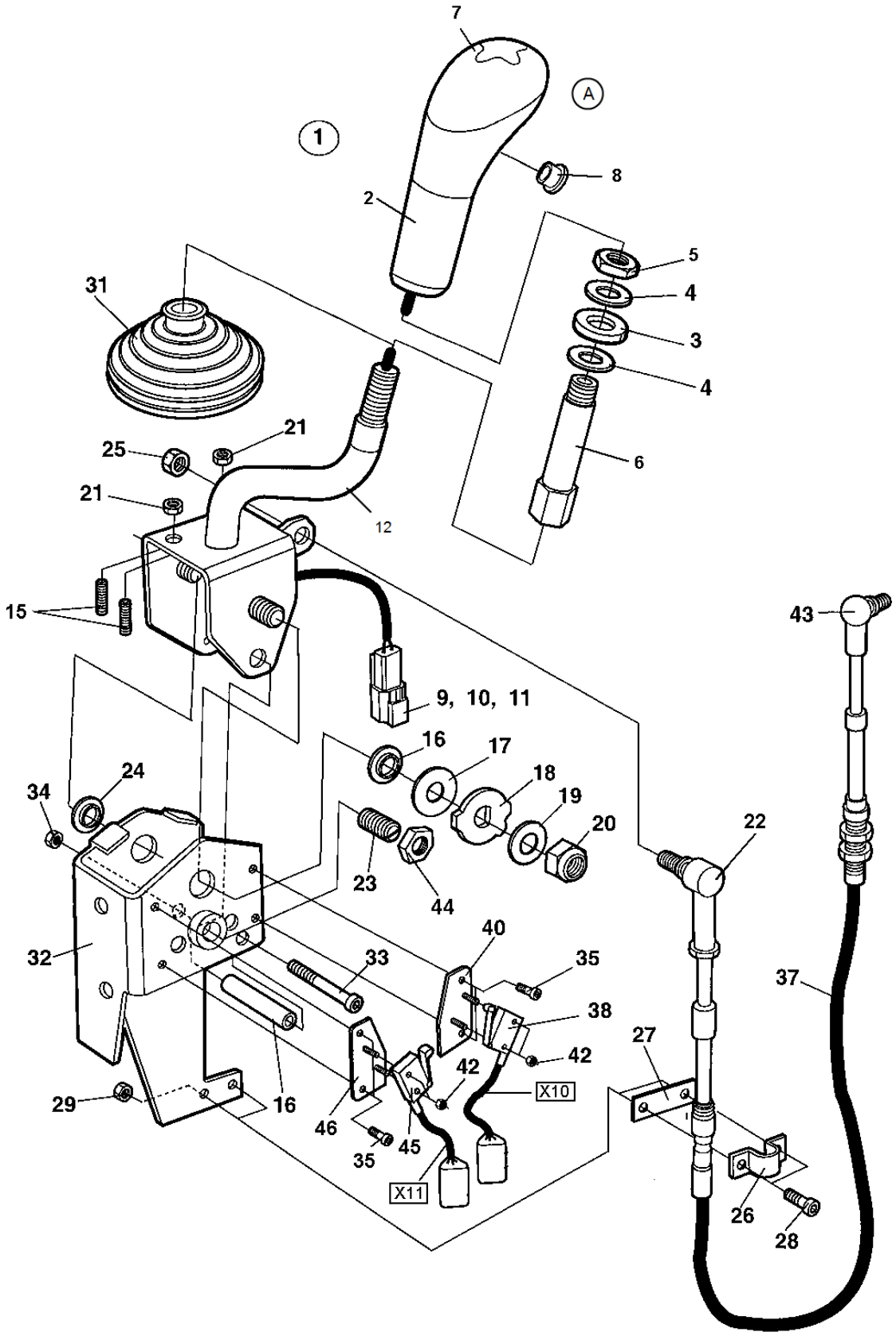

Item	Part No.	Name	Qty	L	SN INFO
1	4700945407	Lever, cpl	1		
A	4700940374	Handle kit, cpl	1		
7	4700378759	Handle top	1		
8	4700377018	Protection plug	1		
12	4700391379	Lever	1		
13	4700377009	Bellows	1		
14	4700570004	Hex. nut	2		
2		Button	1		
2		Cable	1		
2		Lock fluid	1		
2		Service information	1		
3		Seal washer	1		
4		Seal washer	2		
5		Nut	1		
6		Rod	1		
9		Connector, receptable	1		
10		Lock wedge	1		
11		Pin	2		
15	4700377015	Set screw	2		
16	4700377011	Spacer	1		
17	4700377012	Friction washer	1		
18	4700377013	Cam washer	1		
19	4700377014	Spring washer	1		
20	4700586019	Lock nut, M12	1		
21	4700570004	Hex. nut	2		
22	4700377019	Ball joint	1		
23	4700377016	Spring loaded pin	1		
24	4700377017	Bushing	2		
25	4700586003	Nut, M8	1		
26	4700377020	Clamp	1		
27	4700377021	Spacer	1		
28	4700926537	Screw	2		
29	4700586001	Lock nut	2		
30	4700377008	Holder	1		
31	4700377009	Bellows	1		
32	4700377010	Bracket	1		
33	4700508068	Screw	1		

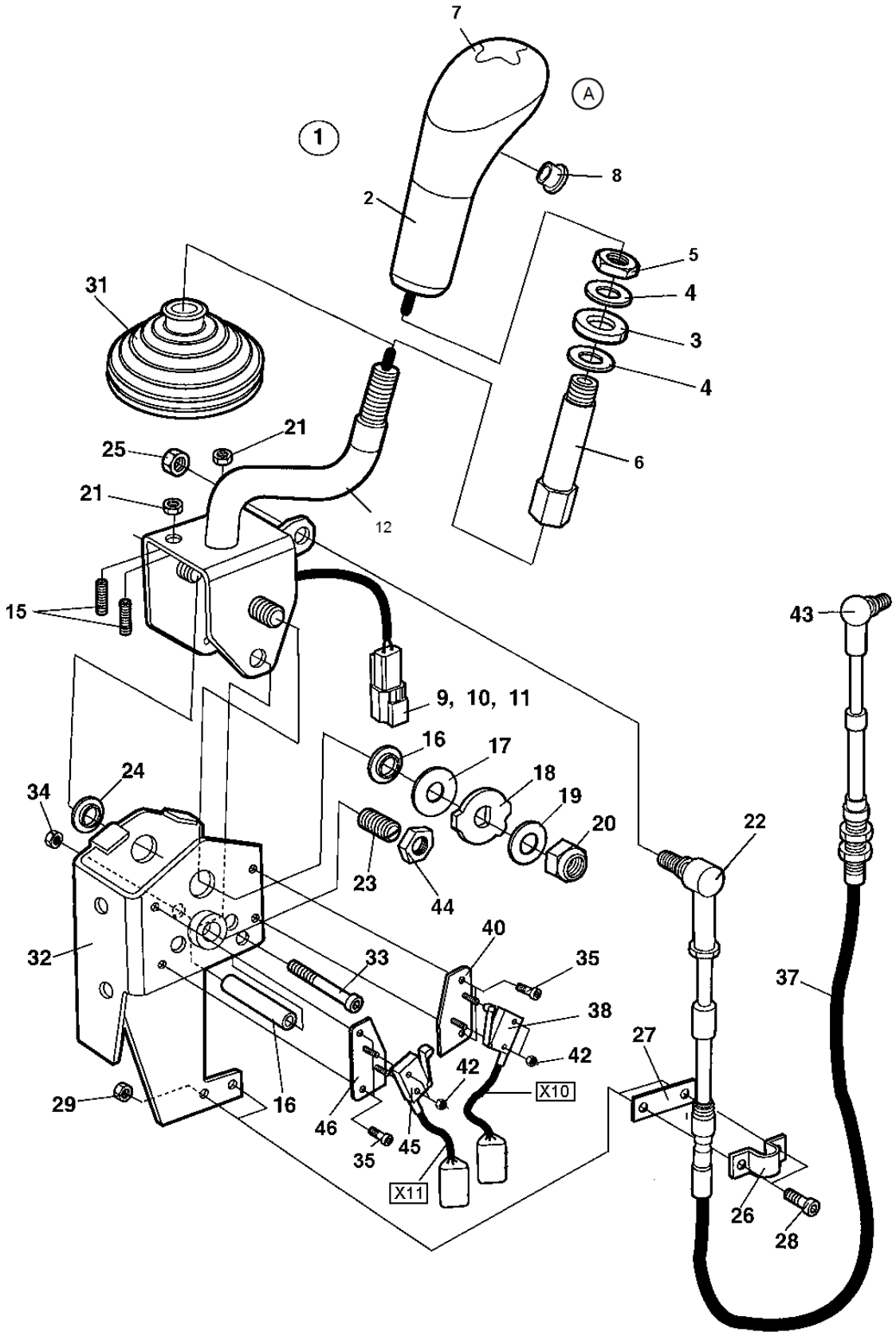
7
A
1
8
2
5
4
3
4
6
31
21
25
21
12
15
43
9, 10, 11
16
17
18
19
20
22
24
34
23
44
40
32
33
35
37
38
27
42
42
X10
29
16
46
45
35
X11
26
28

Item	Part No.	Name	Qty	L	SN INFO
34	4700904563	Lock nut M6	1		
35	4700377023	Screw	4		
36	4700377023	Screw	2		
37	4700377741	Cable	1		
38	4700940930	Micro switch, cpl left	2	B	
38		Connector plug	1		
38		Lock wedge	1		
38		Pin	1		
40		Micro switch holder	1		
42	4700377704	Nut	4		
43	4700377706	Ball joint	1		
44	4700927233	Nut	1		
45	4700940929	Micro switch, cpl right	1	C	
45		Connector plug	1		
45		Lock wedge	1		
45		Pin	1		
46		Micro switch holder	1		

Operator platform Rops

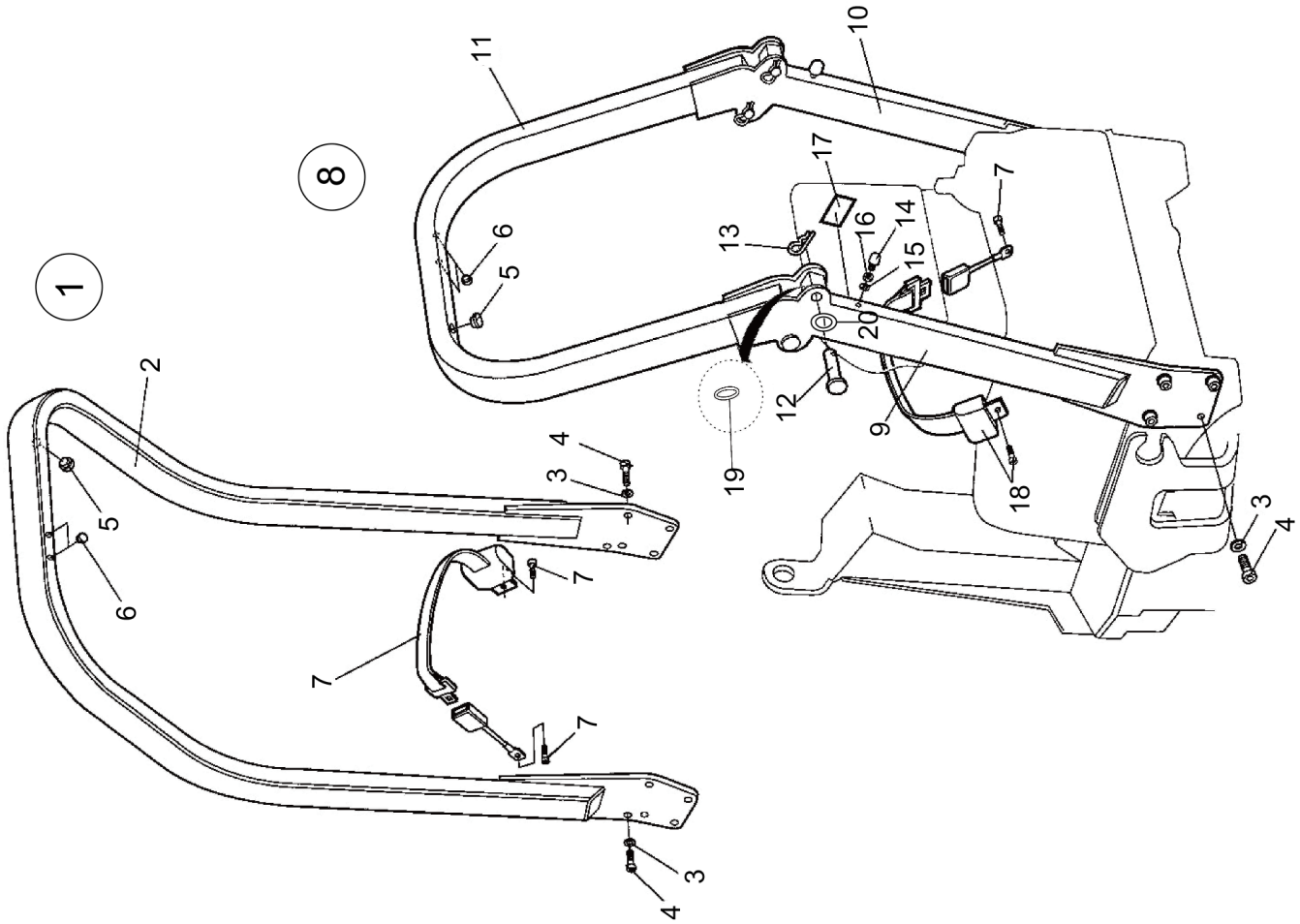

Item	Part No.	Name	Qty	L	SN INFO
1		Rops, cpl (option)	1		
2	4812270768	Rops	1		
3	4700904231	Steel plain washer, 13x24x2 mm 300 HV	8		
4	4700508063	Screw, M12x40 mm 8.8	8		
5	4700282603	Plastic plug	1		
6	4700900986	Plug	1		
7	4700383200	Seat belt 3"	1	A, B	
8		Rops foldable, cpl (standard)	1		
9	4812270598	Rops beam	1		
10	4812270593	Rops beam	1		
11	4812270592	Rops beam	1		
12	4812270158	Threaded spike	4		
13	4700635061	Hair pin	4		
14	4812270725	Shock absorber	2		
15	4700904229	Steel plain washer	2		
16	4700573008	Nut M8	2		
17	4700908229	Safety decal	1		
18	4700377677	Seat belt 2"	1		
20	4812270724	Gasket	4		
19	4700904506	Shims 32x50x2			

Operator platform 4700377256 Cup holder Option

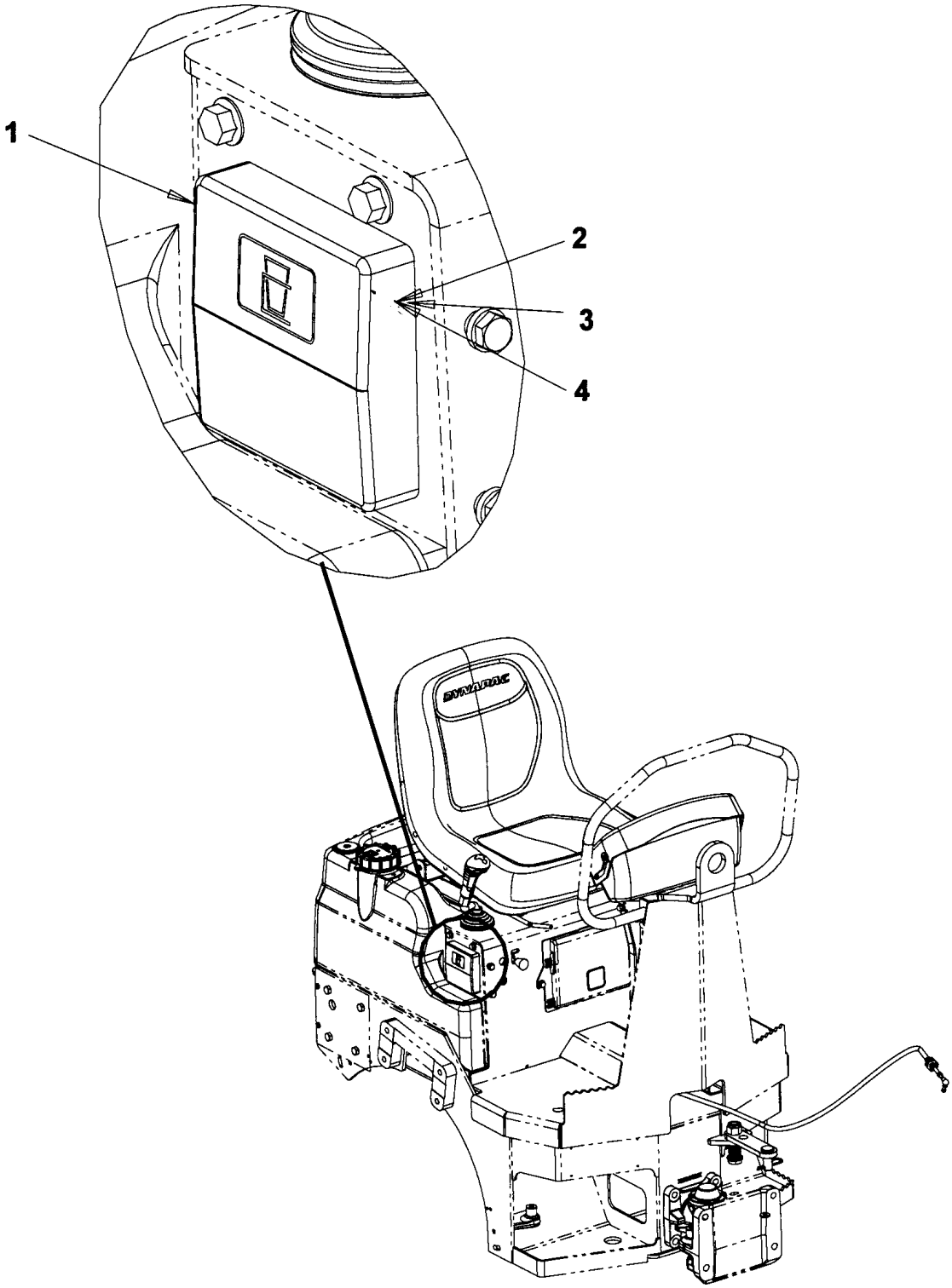

Item	Part No.	Name	Qty	L	SN INFO
1	4700377255	Cup holder	1		
2	4700513027	Screw M4x16H 10,9	4		
3	4700904281	Washer, 5,3x10x1 300HV	4		
4	4700923976	Lock nut	4		

Engine Engine, Loncin LC2V78F

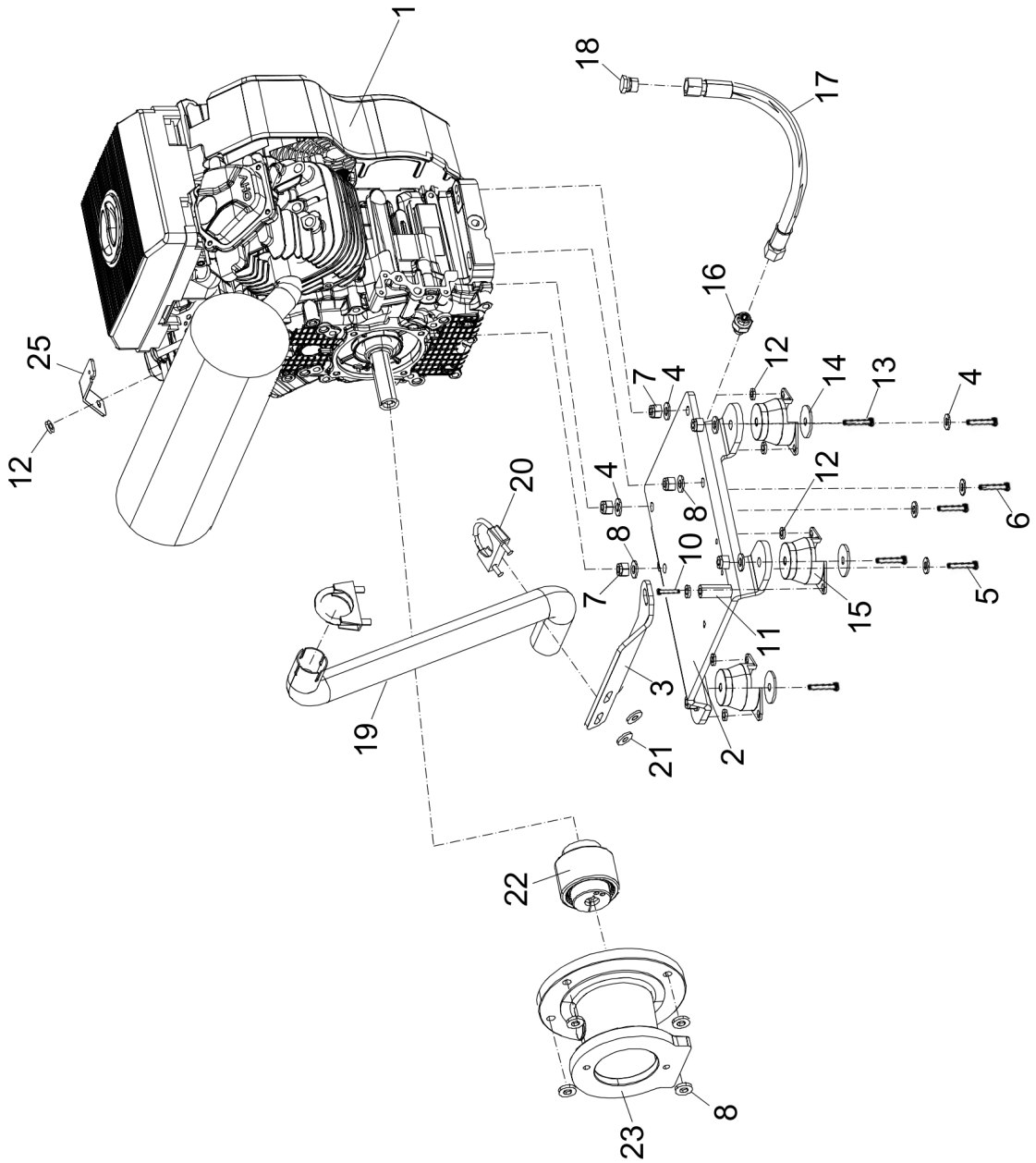

Item	Part No.	Name	Qty	L	SN INFO
1	4812269818	Engine LC2V78F	1		
2	4700388570	Engine plate	1		
3	4812111856	Bracket	1		
4	4700904230	Washer 10.5x22x2 mm 300 HV	10		
5	4700500032	Screw M10 x 55	2		
6	4700500033	Screw M10-1,5x60 8,8	2		
7	4700586018	Lock nut, M10	8		
8	4700904557	Washer, 10.5x22x4 mm 300 HV	6		
9	4700500053	Screw, M8x20 mm 8.8 A2K	8		
10	4700500067	Screw	1		
11	4700387677	Spacer sleeve	1		
12	4700904556	Steel plain washer	9		
13	4700500109	Screw, M10x65 mm 8.8 A3K	4		
14	4700792079	Steel spacer	4		
15	4700387103	Shock absorber	4		
16	4700791536	Straight connector	1		
17	4700388688	Drain hose	1		
18	4700791493	Steel plug threaded	1		
19	4812269817	Exhaust pipe	1		
20	4700927568	Clamp	2		
21	4700904640	Washer, 8.4x22x3 mm 300HV	2		
22	4700377660	Coupling	1		
23	4700377599	Pump adapter	1		
24	4700947684	Screw	4		
25	4812270679	Plate	1		

Engine 4812269818 Engine, Loncin LC2V78F

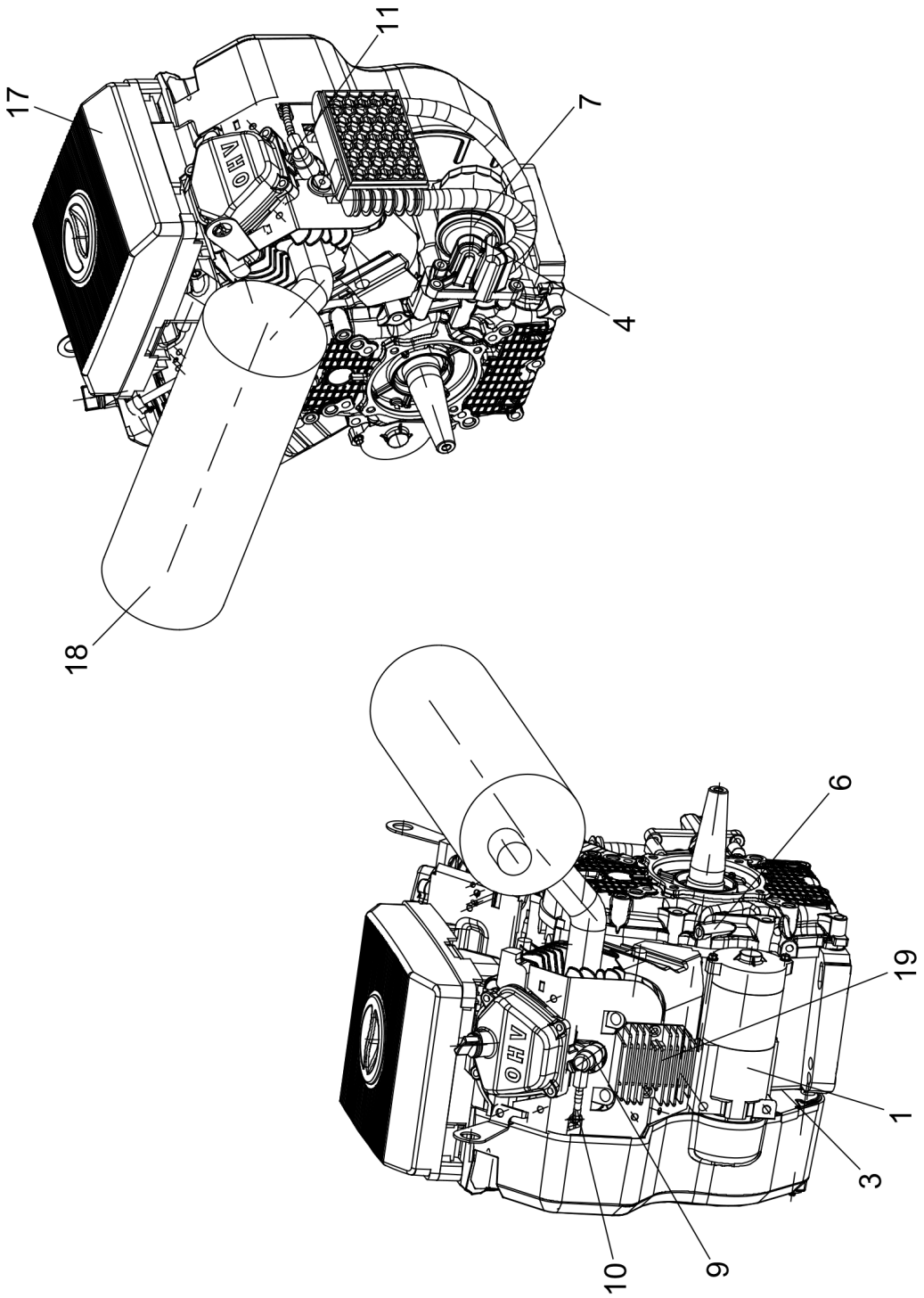

Item	Part No.	Name	Qty	L	SN INFO
0	4812269818	Engine LC2V78F	1		
1	4812274527	Motor, starting	1		
2	4812274528	Switch assembly, oil level	1		
3	4812274529	Relay, automatic switching	1		
4	4812274530	Oil filter assembly	1		
5	4812274531	Oil pump assembly	1		
6	4812274532	Dipstick with seal	1		
7	4812274533	Oil filter seat	1		
8	4812274534	Oil strainer	1		
9	4812274535	Spark plug	1		
10	4812274536	Ignition coil assembly	1		
11	4812274537	Ignition coil assembly	1		
12	4812274538	Fuel pump assembly	1		
13	4812274539	Carburetor assembly	1		
14	4812274540	Fuel filter	1		
15	4812274541	Coil solenoid	1		
16	4812274542	Flywheel complete	1		
17	4812274543	Filter element	1		
18	4812274544	Muffler assembly	1		
19	4812274545	Rectifier	1		
20	4812274600	Fuel pipe	1	A	
21	4812274601	Fuel pipe	1	B	
22	4812274602	Hoop	4	C	

Comments for Page: 4812269818 Engine, Loncin LC2V78F

(L)OCAL REMARK

A | Fuel pipe connection, from fuel filter to fuel pump

B | Fuel pipe connection, from fuel tank to fuel filter

C | For fuel pipe 4812274600 and fuel pipe 4812274601

Engine Fuel system

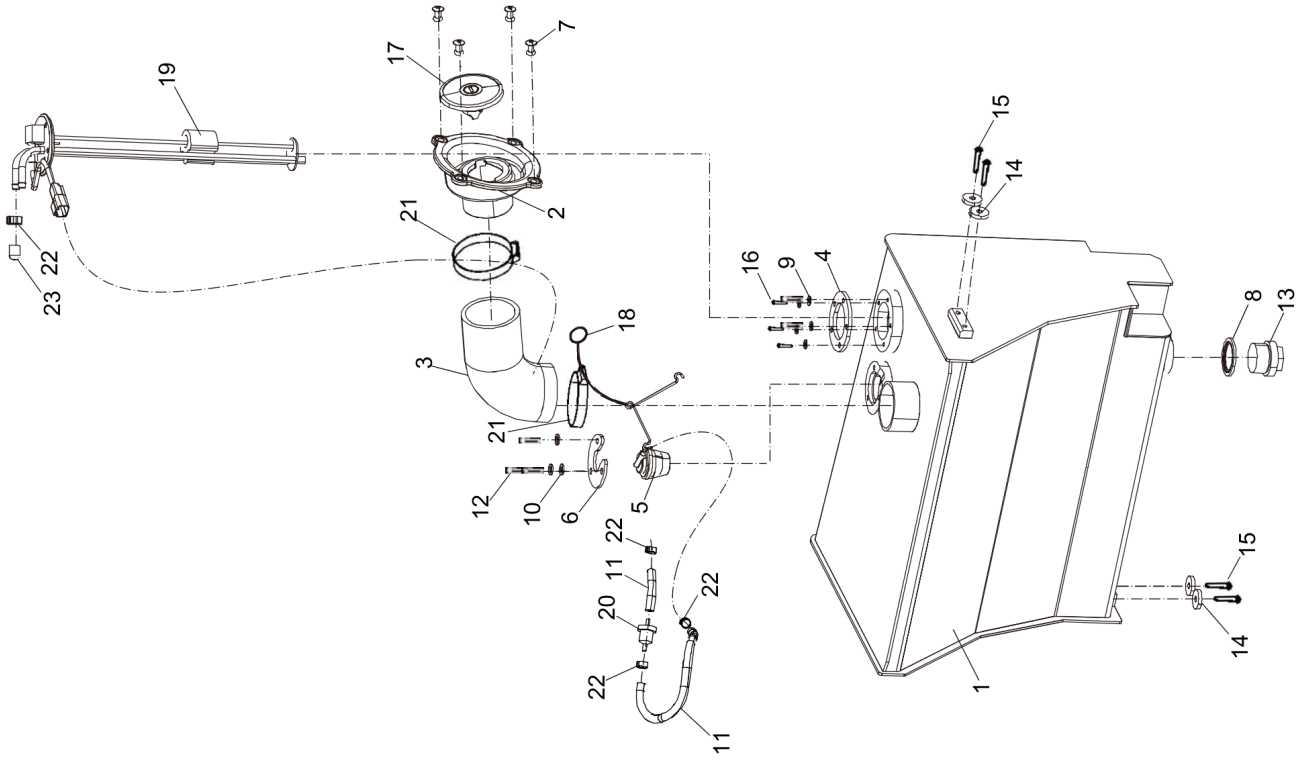

Item	Part No.	Name	Qty	L	SN INFO
1	4812112801	Fuel tank	1		
2	4812114464	Filler neck	1		
3	4812115007	Fuller hose	1		
4	4700945777	Gasket	1		
5	4812114852	Valve housing	1		
6	4812114877	Bracket	1		
7	4700791754	Blind rivet	4		
8	4811000486	Washer	1		
9	4700904281	Washer, 5,3x10x1 300HV	5		
10	4700904228	Washer 6.4x12x1.5 mm 300 HV	3		
11	4812117376	Fuel hose	0.4		
12	4700500012	Hex. screw	3		
13	4700232050	Plug	1		
14	4700904735	Steel plain washer	4		
15	4700500013	Hex. screw	4		
16	4700500004	Screw M5x12 8,8	5		
17	4812115518	Fuel cap	1		
18	4812115526	Holder	1		
19	4700387552	Level gauge	1		
20	4700935438	Fuel filter	1		
21	4700313023	Hose clamp	2		
22	4700792147	Hose clamp	4		
23	4700904137	Protection cap	1		

Drive Drum

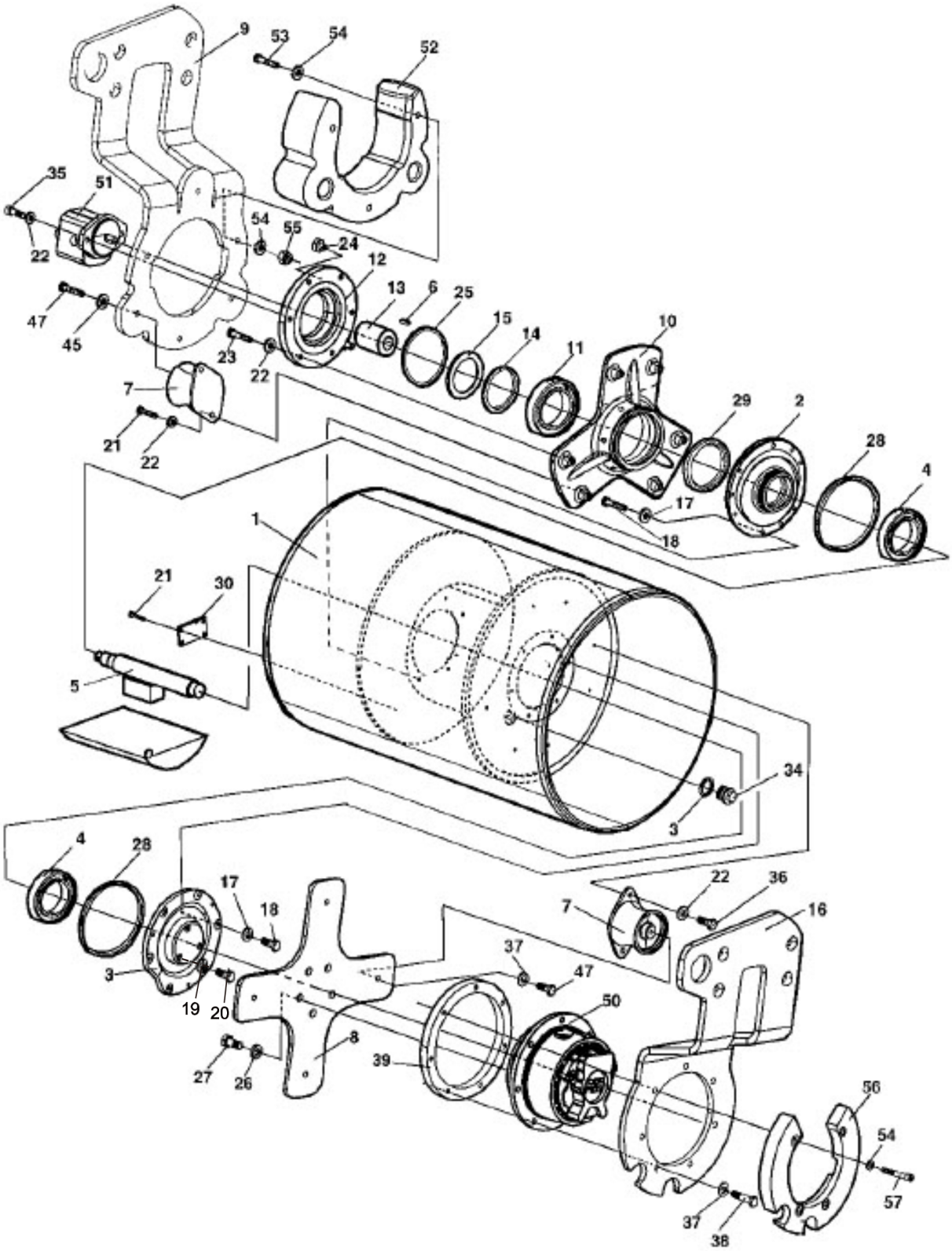
9
53
54
52
35
51
22
54
55
24
12
13
6
25
47
45
23
22
15
14
11
10
7
29
2
21
22
28
4
17
18
1
21
30
5
34
3
4
28
17
18
22
36
7
16
3
19
20
37
47
50
8
39
27
26
56
54
57
37
38

Item	Part No.	Name	Qty	L	SN INFO
1	4812270661	Drum	1		
2	4700386619	Bearing housing	1		
3	4700386620	Bearing housing	1		
4	4700791433	Spherical roller bearing	2		
5	4812270726	Eccentric shaft	1		
6	4700350029	Feather key	1		
7	4700391985	Shock absorber	7		
8	4700386622	Drive disc	1		
9	4700388850	Fork, vibration side	1	A	
10	4700386241	Bearing housing	1		
11	4700111018	Ball bearing	1		
12	4700358666	Adapter	1		
13	4700349202	Coupling	1		
14	4700358689	Spacer ring	1		
15	4700903154	Retaining ring	1		
16	4700388849	Fork, drive side	1	A	
17	4700904640	Washer, 8.4x22x3 mm 300HV	12		
18	4700500022	Screw	12		
19	4700904228	Washer 6.4x12x1.5 mm 300 HV	3		
20	4700500012	Hex. screw	3		
21	4700500212	Main auger shaft	6		
22	4700904557	Washer, 10.5x22x4 mm 300 HV	22		
23	4700500031	Screw	6		
24	4700343490	Air breather	1		
25	4700160132	O-ring 70	1		
26	4700904558	Washer, 17x30x6 mm 300 HV	5		
27	4700947694	Screw, M16 x 35 mm 10.9 GEOMET®	5		
28	4700791425	O-ring 70	2		
29	4700791426	Radial lip seal	1		
30	-	Sign plate	1		
31	4700527002	Drive screw	4		
33	4700162017	Seal ring	1		
34	4700343744	Magnetic plug	1		
35	4700508029	Cylinder screw	2		
36	4700500280	Screw M10x1,5x25	8		
37	4700904703	Plain washer 13x24x4 mm	11		
38	4700925519	Screw M12x55 10.9 GEOMET	7		

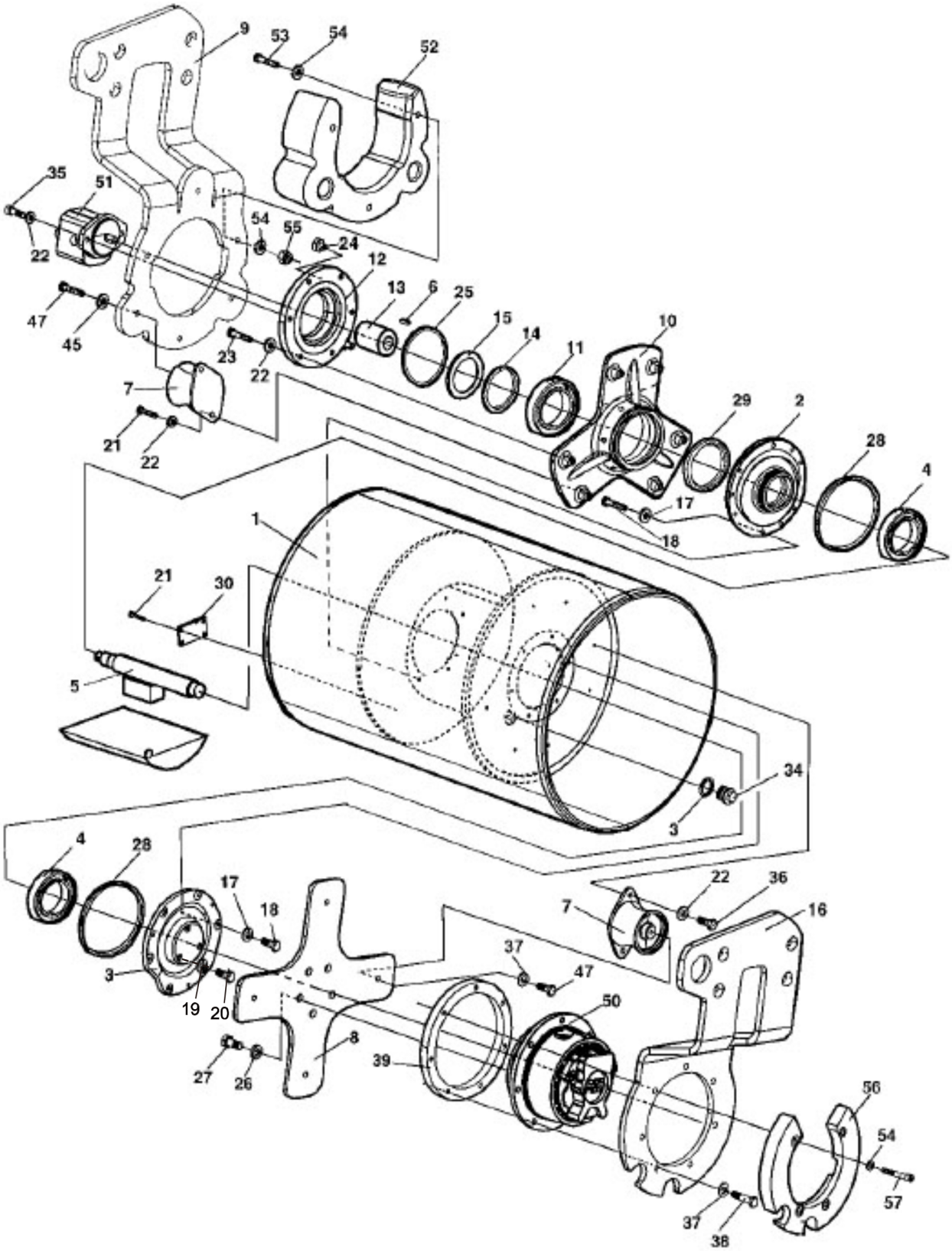
9
53
54
52
35
51
22
54
55
24
12
13
6
25
15
14
11
10
47
45
23
22
7
21
22
29
2
28
4
17
18
1
21
30
5
34
3
4
28
17
18
3
19
20
27
26
8
7
22
36
16
37
47
50
39
56
54
57
37
38

Item	Part No.	Name	Qty	L	SN INFO
39	4700387137	Thread ring	1		
45	4700904231	Steel plain washer, 13x24x2 mm 300 HV	3		
47	4700947687	Screw M12-1,75x30 10,9	7		
49	4700903374	Protective plug	6		
50	-	Hydraulic motor	1	B	
51	-	Hydraulic motor	1	C	

Comments for Page: Drum

(L)OCAL REMARKS

A | en_US | See section "Frame"

B | en_US | See section "Hydraulic propulsion and brake"

C | en_US | See section "Hydraulic vibration"

Drive Drum static

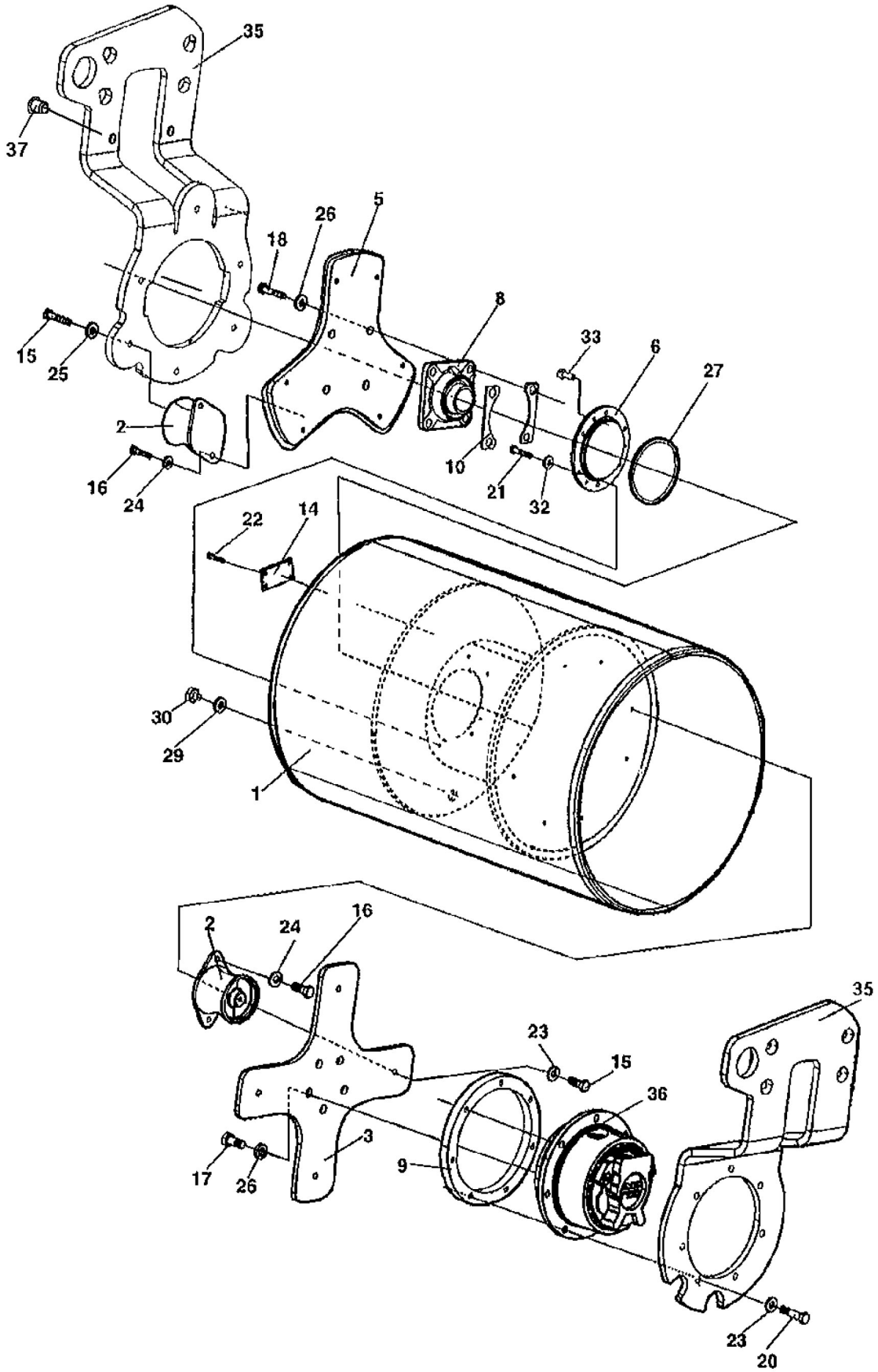

Item	Part No.	Name	Qty	L	SN INFO
1	4812270662	Drum	1		
2	4700391985	Shock absorber	7		
3	4700386622	Drive disc	1		
4	4700388850	Fork, vibration side	1		
5	4700388386	Support disc	1		
6	4700388387	Drum shaft	1		
7	4700388849	Fork, drive side	1		
8	4700388416	Bearing	1		
9	4700387137	Thread ring	1		
10	4700388259	Holder	2		
11	4700388153	Spacer	2		
12	4700387424	Shim	N		
13	4700387425	Shim	N		
14	-	Sign plate	1		
15	4700947687	Screw M12-1,75x30 10,9	7		
16	4700500280	Screw M10x1,5x25	14		
17	4700947694	Screw, M16 x 35 mm 10.9 GEOMET®	10		
18	4700500070	Hex. screw	4		
19	4700791972	Screw M12x100	8		
20	4700925519	Screw M12x55 10.9 GEOMET	7		
21	4700500021	Hex. screw	6		
22	4700527002	Drive screw	4		
23	4700904703	Plain washer 13x24x4 mm	11		
24	4700904557	Washer, 10.5x22x4 mm 300 HV	14		
25	4700904231	Steel plain washer, 13x24x2 mm 300 HV	11		
26	4700904558	Washer, 17x30x6 mm 300 HV	14		
27	4700160041	O-ring	1		
29	4700162017	Seal ring	1		
30	4700232210	Plug	1		
32	4700904640	Washer, 8.4x22x3 mm 300HV	6		
33	4700903374	Protective plug	3		
35	-	Fork	1	A	
36	-	Hydraulic motor	1	B	
37	4700926215	Protective plug	2		

Comments for Page: Drum static

(L)OCAL REMARKS

A | en_US | See section "Frame"

B | en_US | See section "Hydraulic propulsion and brake

This page intentionally left blank

Hydraulic propulsion and brake system motor Hydraulic propulsion and brake system motor

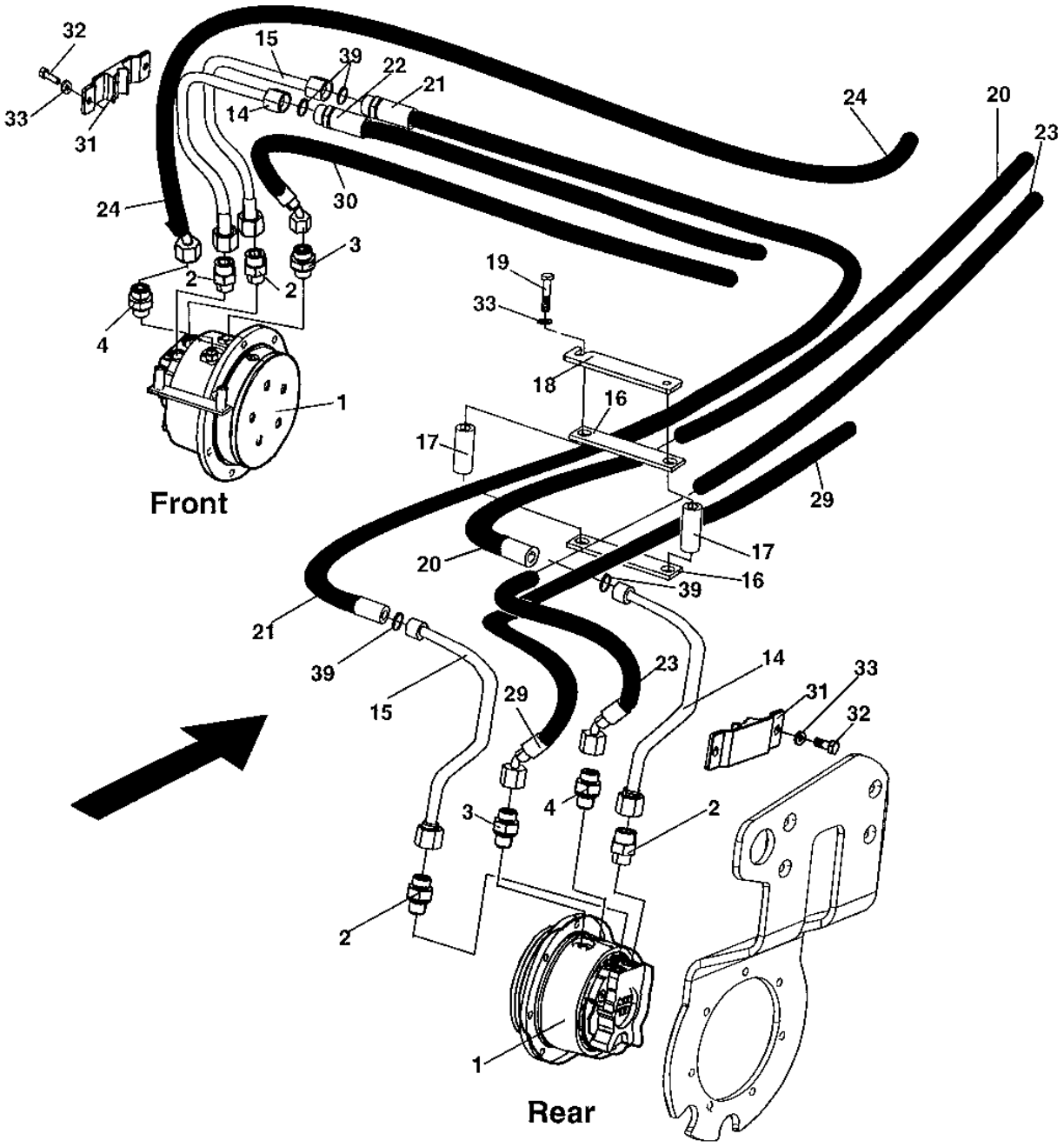

Item	Part No.	Name	Qty	L	SN INFO
1	4700387270	Hydraulic motor	2		
2	4700904641	Straight connector orfs	4		
3	4700791535	Connector	2		
4	4700791537	Straight connector	2		
14	4700387597	Pipe	2		
15	4700387598	Pipe	2		
16	4700387678	Rubber part	2		
17	4700387677	Spacer sleeve	2		
18	4700387676	Hose bracket	1		
19	4700500068	Screw M08x65	2		
20	4700483707	Hydraulic hose	1	A	
21	4700483646	Hydraulic hose	1		
22	4700483708	Hydraulic hose	1	A	
23	4700483689	Hydraulic hose	1	A	
24	4700483709	Hydraulic hose	1	A	
29	4700389403	Hydraulic hose	1	A	
30	4700389408	Hydraulic hose	1	A	
31	4700388960	Hose clamp	2		
32	4700500053	Screw, M8x20 mm 8.8 A2K	4		
33	4700904229	Steel plain washer	6		
39	4700904009	O-ring	4		

Comments for Page: Hydraulic propulsion and brake system motor

(L)OCAL REMARKS

A | en_US | See section " Propulision system, pump"

Hydraulic propulsion and brake system motor 4700387270 Hydraulic motor

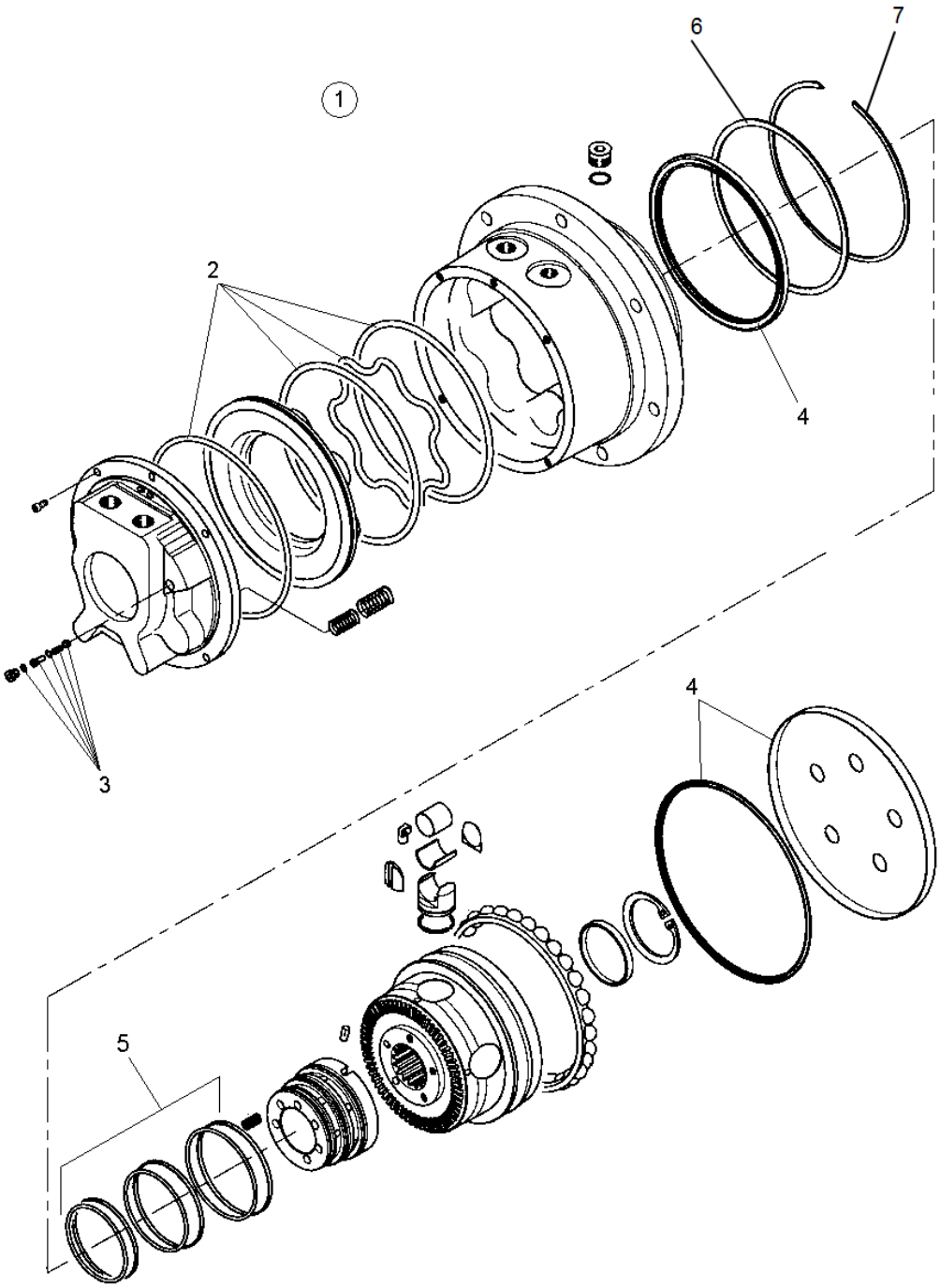

Item	Part No.	Name	Qty	L	SN INFO
1	4700387270	Hydraulic motor	1		
2	4700945532	Sealing kit Debraking system	1		
3	4700945658	Sealing kit	1		
4	4700945531	Seal kit Rotating parts	1		
5	4812156798	Seal kit	1		
6	4812160652	Shim	1		
7	4812160653	Snap ring	1		

Hydraulic system Hydraulic propulsion and brake system pump

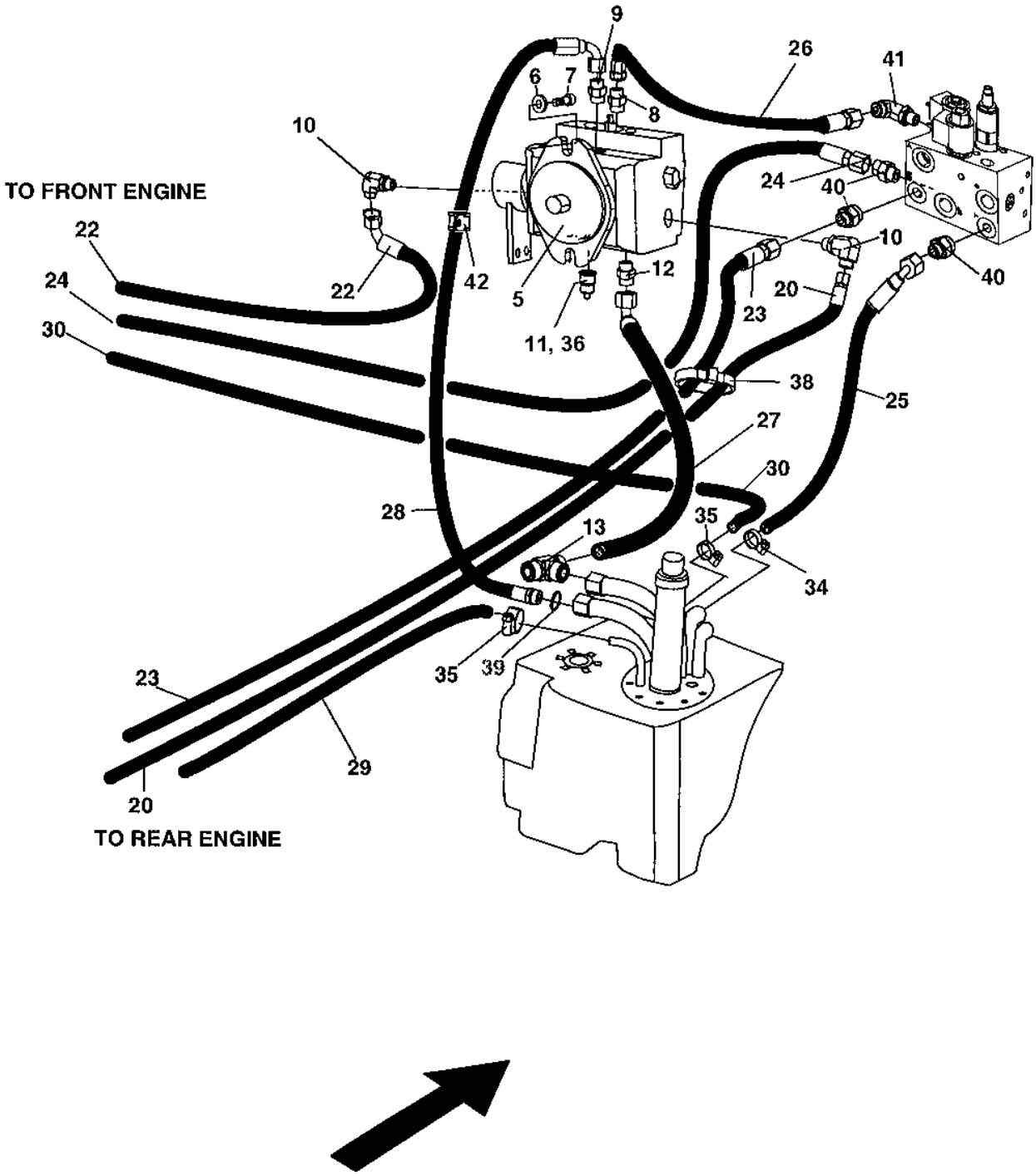

Item	Part No.	Name	Qty	L	SN INFO
5	4700377293	Hydraulic pump	1		
5	4812156996	Seal kit	1		
5	4812313026	Torsion spring	1		
6	4700904557	Washer, 10.5x22x4 mm 300 HV	2		
7	4700508029	Cylinder screw	2		
8	4700791541	Adapter	1		
9	4700904727	Adapter	1		
10	4700791699	Elbow 90	2		
11		Temperature sensor	1	A	
12	4700792074	Straight connector	1		
13	4700791630	T-connector ORFS	1		
19	4700389404	Hydraulic hose	1		
20	4700483707	Hydraulic hose	1		
22	4700483708	Hydraulic hose	1		
23	4700483689	Hydraulic hose	1		
24	4700483709	Hydraulic hose	1		
25	4700389400	Hydraulic hose	1		
26	4700483652	Hydraulic hose	1		
27	4700483712	Hydraulic hose	1		
28	4700483714	Hydraulic hose	1		
29	4700389403	Hydraulic hose	1		
30	4700389408	Hydraulic hose	1		
34	4700313108	Hose clamp	1		
35	4700313001	Hose clamp	2		
36	4700162005	Washer sealing	1	B	
38	4700313102	Cable ties	1		
39	4700904009	O-ring	1		
40	4700791538	Straight connector	3		
41	4700792094	Elbow 90°	1		
42	4700921028	Pipe clamp	1		

Hydraulic vibration Hydraulic vibration

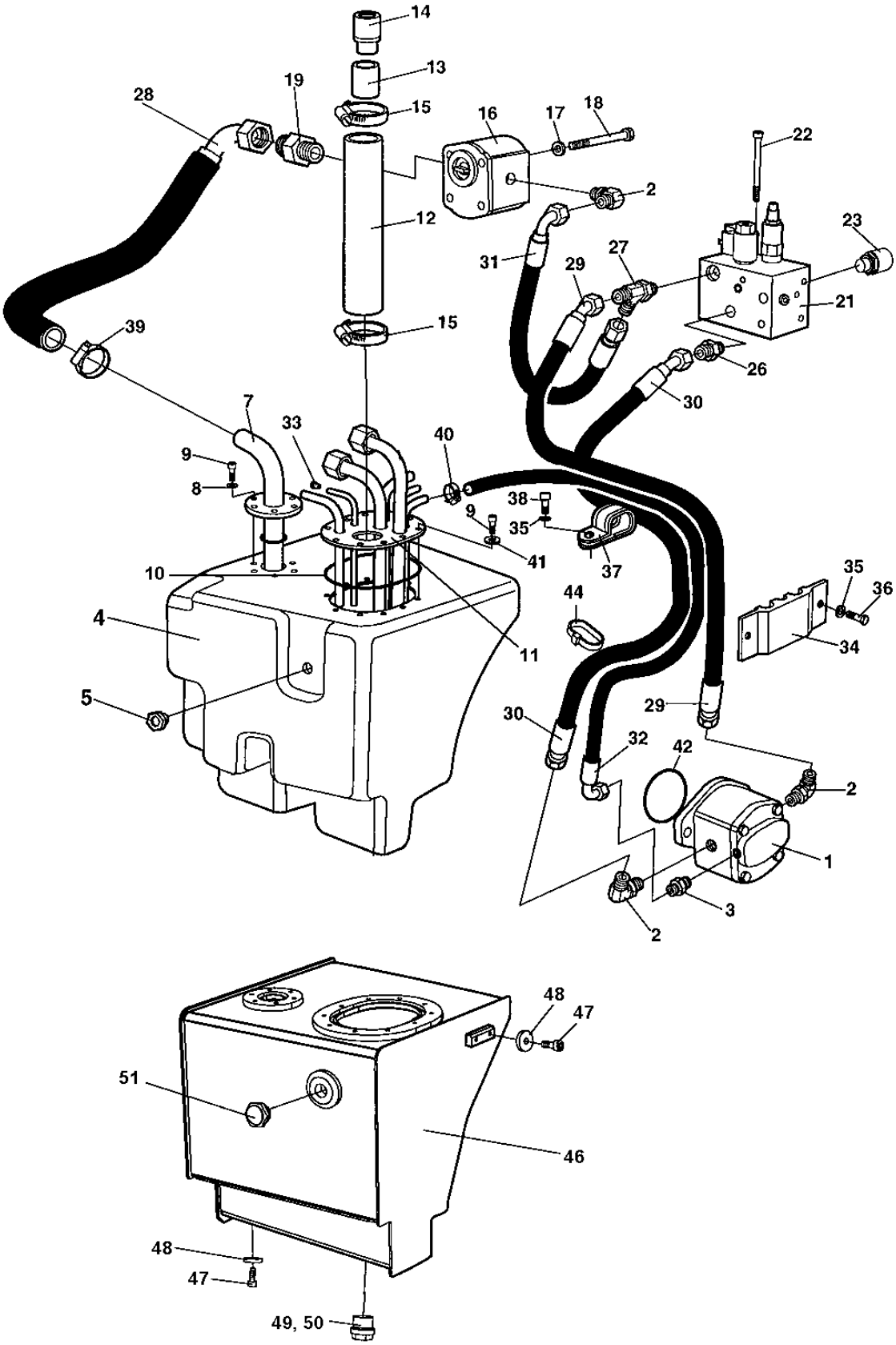

Item	Part No.	Name	Qty	L	SN INFO
1	4812118170	Hydraulic motor	1		
2	4700791699	Elbow 90	3		
3	4700791541	Adapter	1		
4	4700387278	Hydraulic oil tank	1		
5	4700791395	Sight plug	1		
6	4700791794	O-ring	1		
7	4812270765	Suction pipe	1		
8	4700904735	Steel plain washer	6		
9	4700508002	Cylinder screw	16		
10	4700792321	O-ring	1		
11	4812270766	Hydraulic tank cover	1		
12	4700205067	Rubber hose	N		
13	4700357139	Connector	1		
14	4700357138	Ventilating filter	1		
15	4700313008	Hose clamp	2		
16	4700377294	Hydraulic pump	1		
17	4700904230	Washer 10.5x22x2 mm 300 HV	2		
18	4700792092	Screw	2		
19	4700791631	Connector, G3⁄4 in. x 7⁄16 in. UNF	1		
20	4700388194	Combination valve	1		
21	4812265011	Combination valve	1		
01	4812313158	Valve	1		
02	4812313159	Solenoid valve	1		
a	4812313161	Coil	1		
03	4812313160	Solenoid valve	1		
a	4812313161	Coil	1		
22	4700508094	Screw	2		
23	4700901157	Measuring nipple	1		
26	4700791412	Straight o-ring connector	1		
27	4700791700	Tee-connector	1		
28	4700389414	Hydraulic hose	1		
29	4700483664	Hydraulic hose	1		
30	4700483664	Hydraulic hose	1		
31	4700483711	Hydraulic hose	1		
32	4700389402	Hydraulic hose	1		
33	4700389196	Protective plug	1		
34	4700388653	Hose clamp	1		

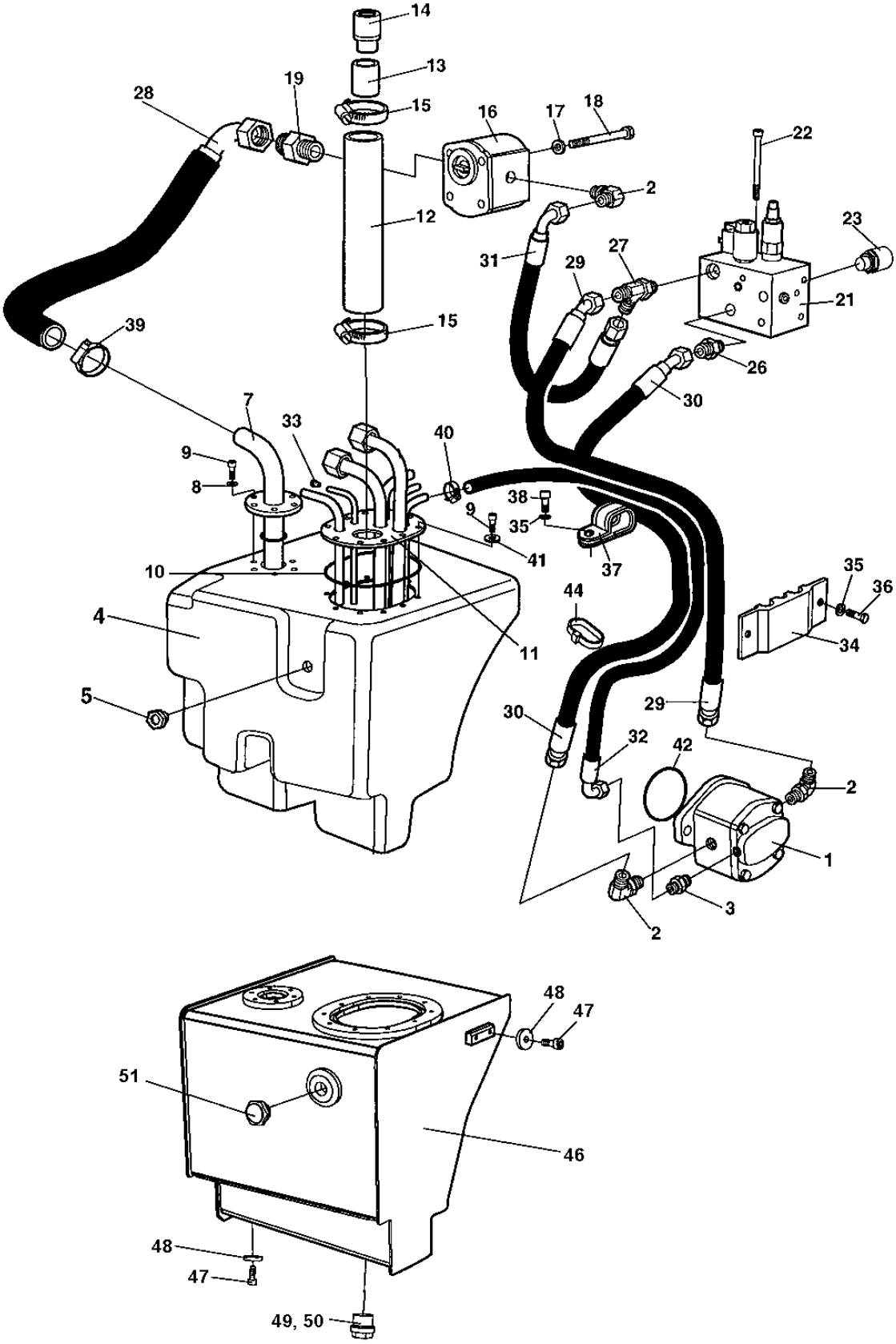
14
13
19
28
15
16
17
18
22
2
12
23
31
29
27
21
39
15
26
30
7
33
40
9
8
38
9
35
41
37
10
35
36
44
4
11
34
5
29
30
32
42
2
1
3
2
48
47
51
46
48
47
49, 50

Item	Part No.	Name	Qty	L	SN INFO
35	4700904229	Steel plain washer	3		
36	4700500053	Screw, M8x20 mm 8.8 A2K	2		
37	4700283711	Hose clamp	1		
38	4700508092	Screw	1		
39	4700313035	Clamp	1		
40	4700313108	Hose clamp	1		
41	4700904735	Steel plain washer	10		
42	4700160032	O-ring	1		
44	4700313102	Cable ties	1		
46	4700379460	Hydraulic tank	1		
47	4700500013	Hex. screw	4		
48	4700904735	Steel plain washer	4		
49	4700791120	Washer sealing	1		
50	4700232039	Steel plug threaded	1		
51	4700791395	Sight plug	1		

Hydraulic vibration 4812118170 Hydraulic motor

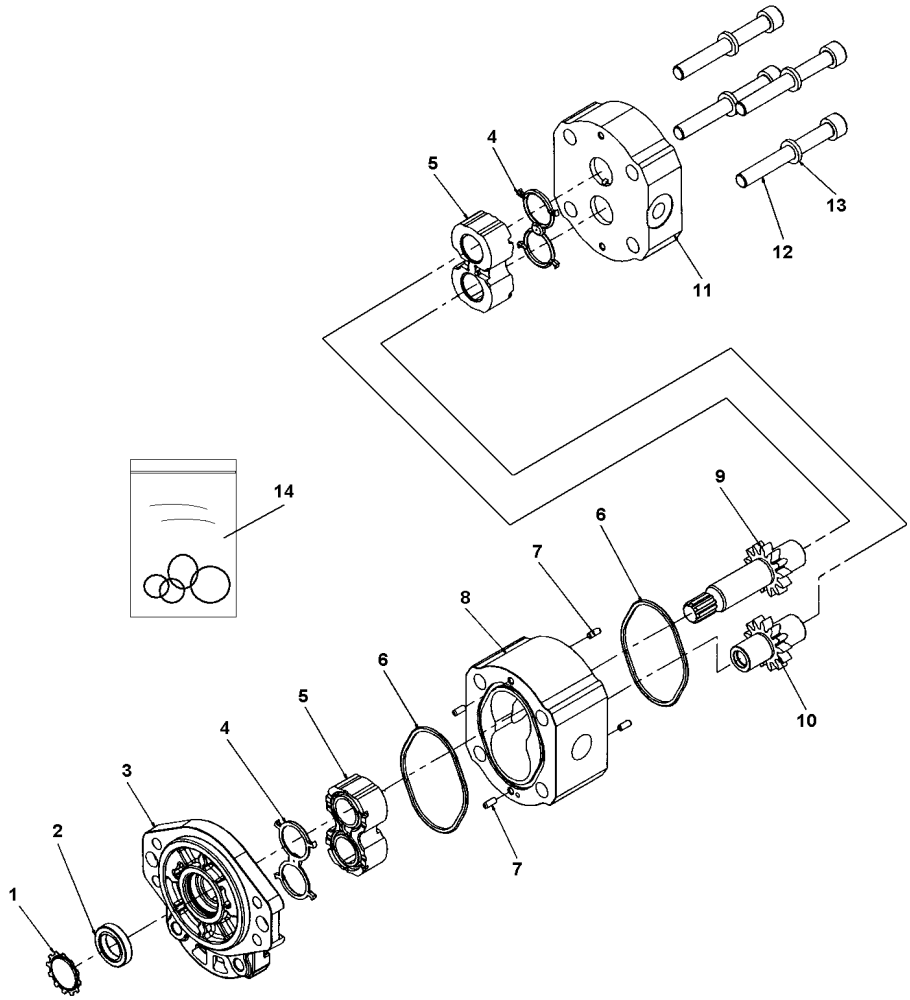

Item	Part No.	Name	Qty	L	SN INFO
1	-	Star ring	1		
2	-	Shaft seal	1		
3	-	Idle gear	1		
4	-	Seal	2		
5	-	Bearing block	2		
6	-	O-ring	2		
7	-	Idle gear	4		
8	-	Idle gear	1		
9	-	Idle gear	1		
10	-	Idle gear	1		
11	-	End cover	1		
12	-	Bolt	4		
13	-	Washer M8 ISO 7089, 13/25,4x3,4	4		
14	4812157555	Seal kit	1		

Hydraulic steering Hydraulic steering

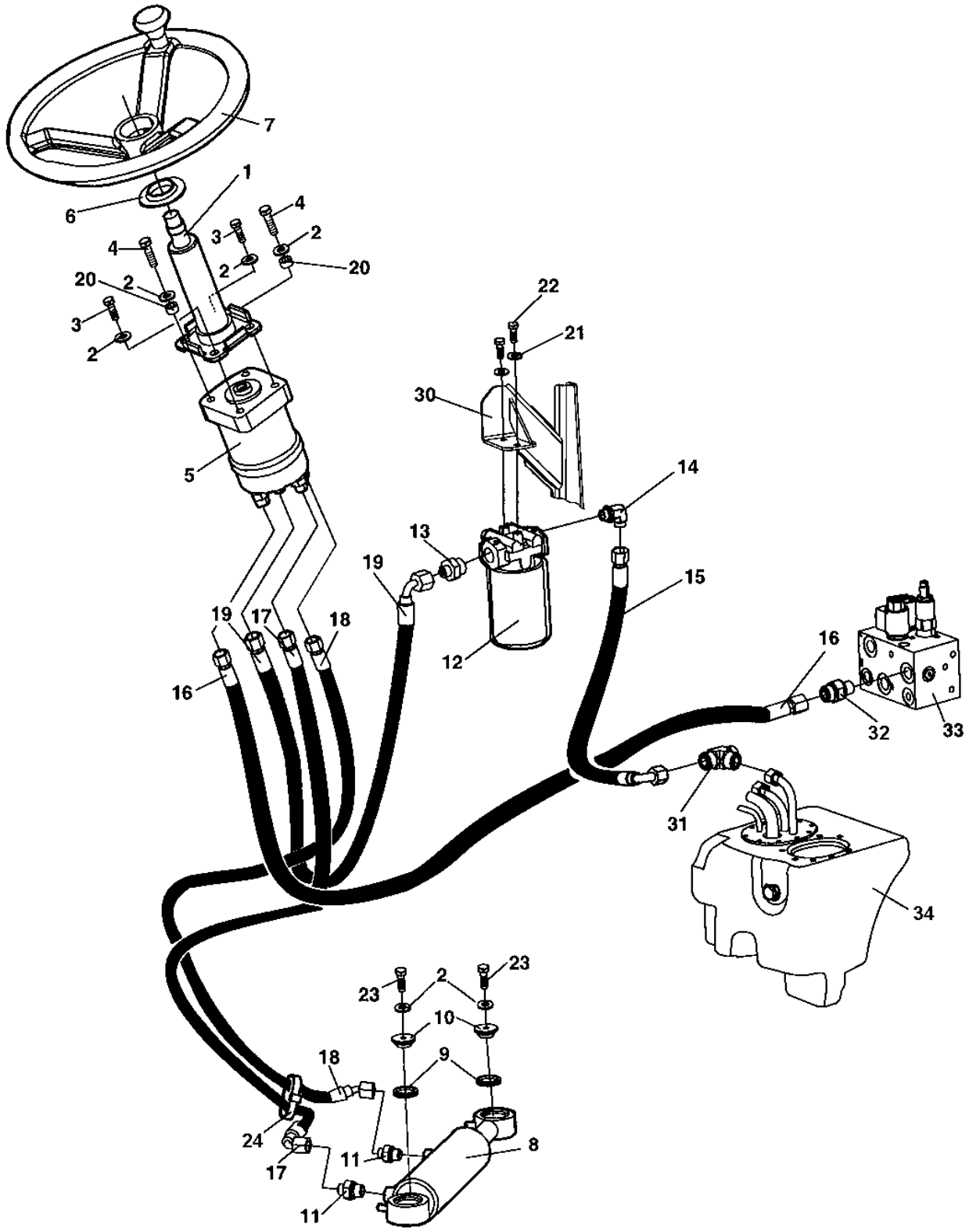

Item	Part No.	Name	Qty	L	SN INFO
1	4700902123	Steering column	1		
2	4700904230	Washer 10.5x22x2 mm 300 HV	6		
3	4700500048	Screw, M10x20 mm 8.8 A3K	2		
4	4700500031	Screw	2		
5	4700387274	Steering valve	1		
6	4700928830	Rubber part	1		
7	4700372964	Steering wheel	1		
7	4700935614	Turning knob	1		
7	4700935613	Cover	1		
8	4700387275	Hydraulic cylinder	1		
8	4700945526	Bearing	2		
9	4700791565	Sealing	2		
10	4700376861	Washer	2		
11	4700791542	Straight connector	2		
12	4700387277	Hydraulic oil filter, cpl	1		
12	4700376636	Cleaning filter element Maximum 50 hours use	1		
12	4700376637	Hydraulic filter element	1	E	
13	4700791408	Straight o-ring connector	2		
14	4700792068	Elbow 90°	1	A	
15	4700483716	Hydraulic hose	1	A	
16	4700483710	Hydraulic hose	1		
17	4700483654	Hydraulic hose	1		
18	4700483655	Hydraulic hose	1		
19	4700483656	Hydraulic hose	1		
20	4700355869	Spacer sleeve	2		
21	4700904229	Steel plain washer	2		
22	4700500053	Screw, M8x20 mm 8.8 A2K	2		
23	4700947684	Screw	2		
24	4700313102	Cable ties	1		
30	-	Bracket	1	B	
31	-	Tee-connector	1	C	
32	4700791412	Straight o-ring connector	1		
33	-	Combination valve	1	D	
34	-	Hydraulic tank	1	D	

Comments for Page: Hydraulic steering

(L)OCAL REMARKS

A | en_US | Together with hydraulic cooling see section "Hydraulic cooling"

B | en_US | See section " Engine hood"

C | en_US | See section "Hydraulic propulsion and brake"

D | en_US | See section " Hydraulic vibration"

E | en_US | Spare part for ordinary service

This page intentionally left blank

Hydraulic steering 4700387274 Steering valve

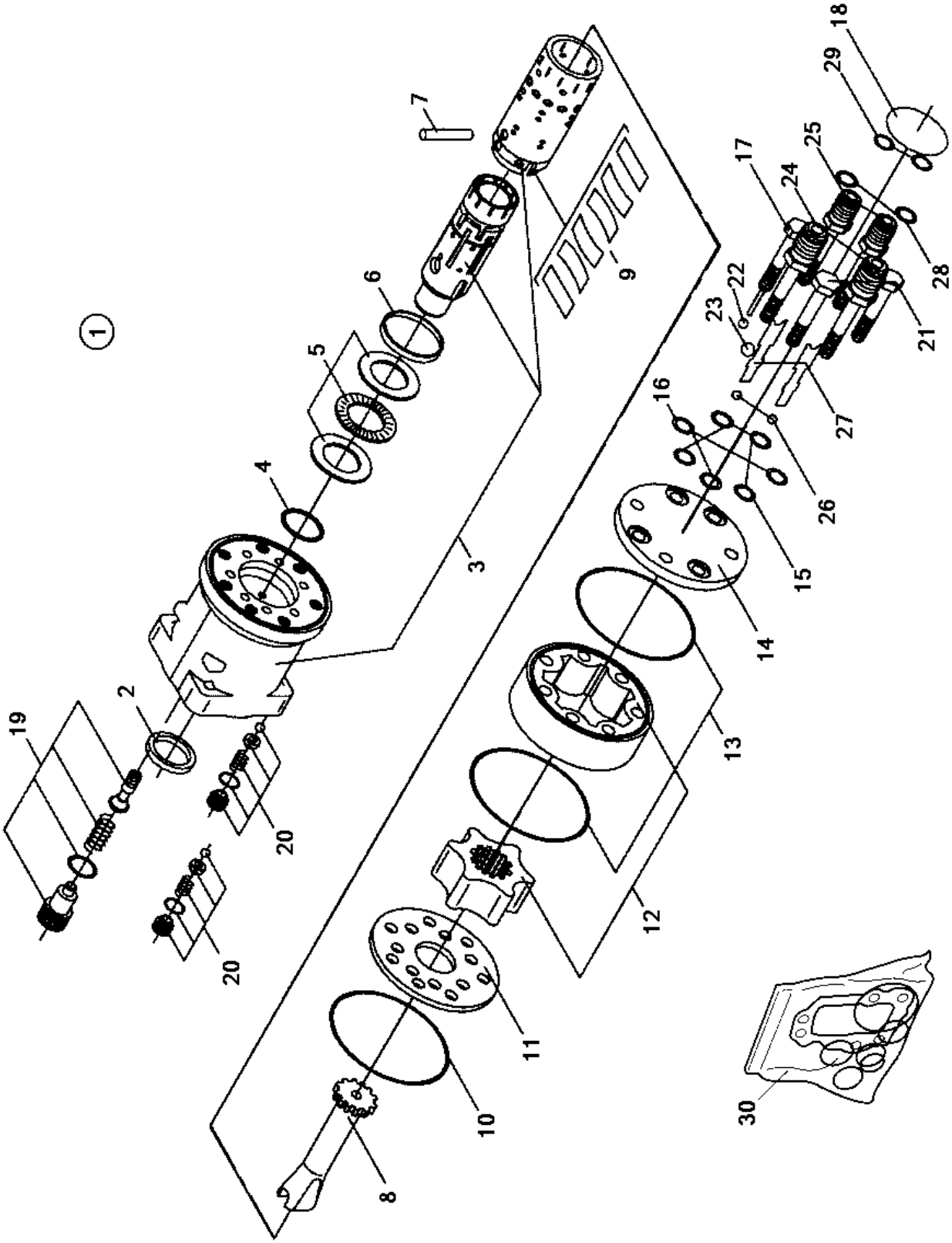

Item	Part No.	Name	Qty	L	SN INFO
1	-	Steering valve, cpl	1		
2	-	Seal ring	1	A	
3	-	Housing, spool and sleeve	1		
4	-	O-ring	1	A	
5	-	Piston guides	1		
6	-	Ring	1		
7	-	Cross pin	1		
8	-	Cardan shaft	1		
9	-	Set of springs	1		
10	-	O-ring	1	A	
11	-	Distributor plate	1		
12	-	Gear wheel set	1		
13	-	O-ring	2	A	
14	-	End cover	1		
15	-	O-ring	4	A	
16	-	Washer M8 ISO 7089, 13/25,4x3,4	3	A	
17	-	Screw with pin	1		
18	-	Name plate	1		
19	-	Relief valve	1		
20	-	Shock valves	2		
21	-	Screw	2		
22	-	Ball	1		
23	-	Ball	1		
24	4812159159	Port	2	B	
25	4812159160	Port	2	C	
26	-	Ball	2		
27	-	Ball stop	2		
28	-	O-ring	2		
29	-	O-ring	2		
30	4700935429	Seal kit	1		

Comments for Page: 4700387274 Steering valve

(L)OCAL REMARKS

A | en_US | Included in sealkit, item 30

B | en_US | P and T

C | en_US | L and R

Hydraulic steering 4700387275 Hydraulic cylinder

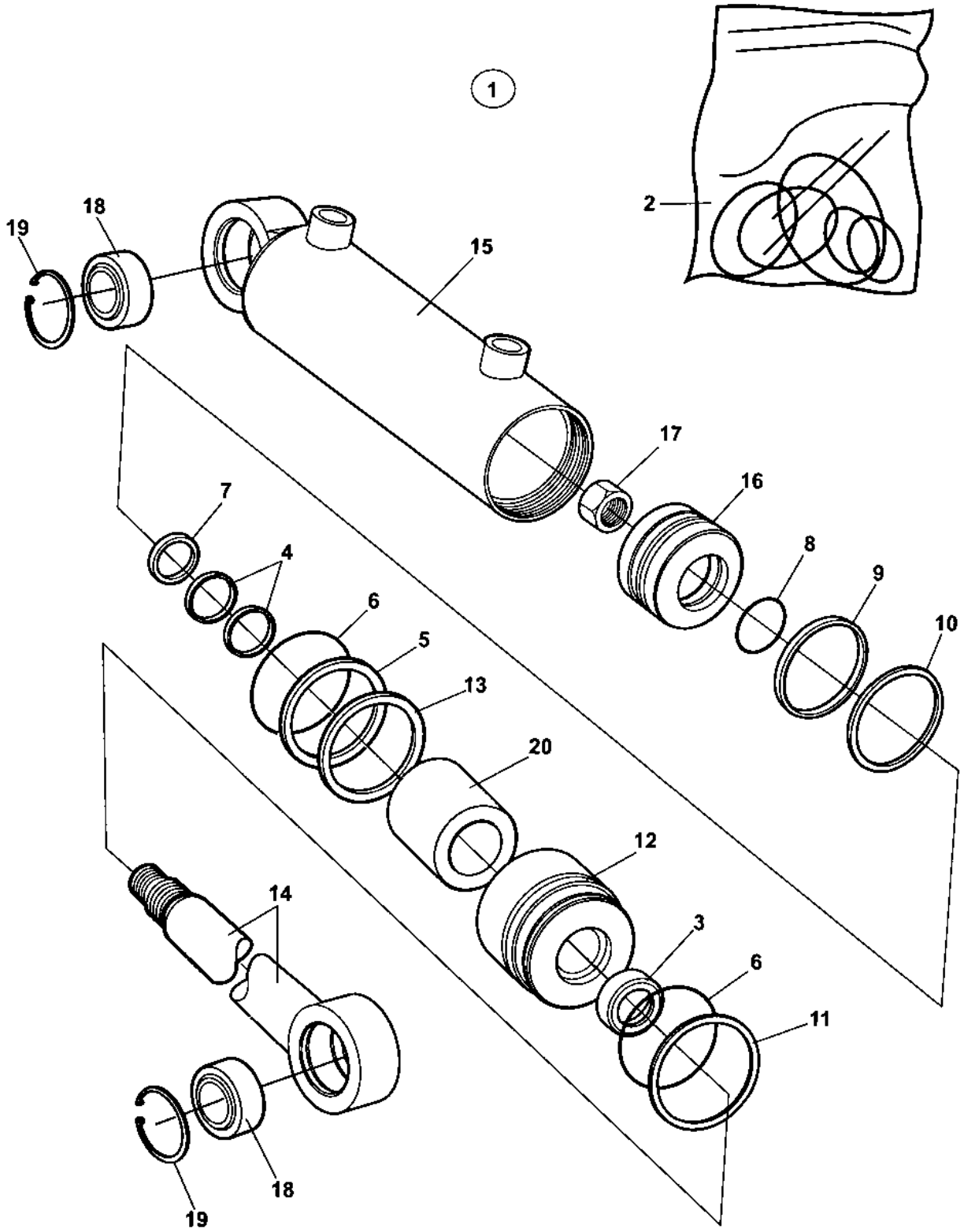

Item	Part No.	Name	Qty	L	SN INFO
1	4700387275	Hydraulic cylinder	1		
2	4700945668	Seal kit	1		
3	---	Seal	1		
4	---	Seal	2		
5	---	Back-up ring	1		
6	---	O-ring	2		
7	---	Seal	1		
8	---	O-ring	1		
9	---	Seal	1		
10	---	Seal	1		
11	--	Retaining ring	1		
12	--	Steering	1		
13	--	Retaining ring	1		
14	--	Rod seal	1		
15	--	Cylinder	1		
16	--	Piston block	1		
17	--	Cylinder nut	1		
18	4700945526	Bearing	1		
19	4812159771	Retaining ring	1		
20	--	Spacer	1	A	

Comments for Page: 4700387275 Hydraulic cylinder

(L)OCAL REMARKS

A | en_US | Not valid for this model

Hydraulic system Hydraulic cooling Option

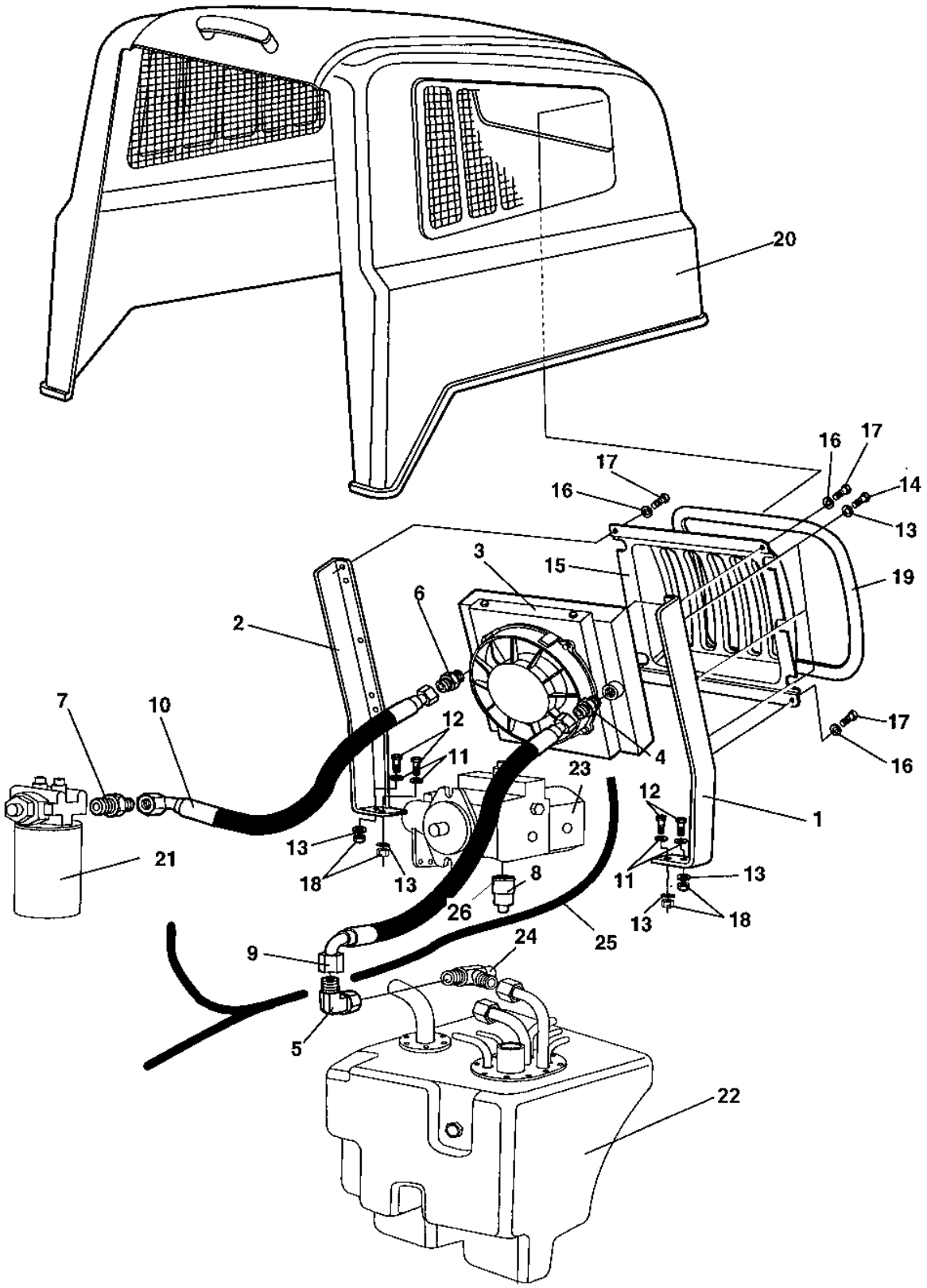

Item	Part No.	Name	Qty	L	SN INFO
1	4700388559	Cooler bracket	1		
1	4812115054	Cooler bracket	1		
2	4700388558	Cooler bracket	1		
3	4700387530	Hydraulic oil cooler	1		
4	4700904641	Straight connector orfs	1		
5	4700904766	Elbow connector 90°	1		
6	4700791635	Straight connector	1	A	
7	4700791408	Straight o-ring connector	1		
8	4700377339	Temperature sensor	1		
9	4700483713	Hydraulic hose	1		
10	4700483715	Hydraulic hose	1	C	
11	4700904556	Steel plain washer	4		
12	4700500022	Screw	4		
13	4700904229	Steel plain washer	10		
14	4700500018	Hex. screw	6		
15	4700389146	Cover	1		
16	4700904228	Washer 6.4x12x1.5 mm 300 HV	4		
17	4700500012	Hex. screw	4		
18	4700586003	Nut, M8	4		
19	4700902166	Edge trim	1		
20	4700377857	Engine hood, cpl	1	E	
21	-	Hydraulic oli filter	1	G	
22	-	Hydraulic oil tank	1	F	
23	-	Hydraulic pump	1	B	
24	-	Tee-connector	1	B	
25	4700390486	Cable harness	1		
26	4700162005	Washer sealing	1		

Comments for Page: Hydraulic cooling Option

(L)OCAL REMARKS

A | en_US | Replace elbow 4700792068 section "Hydraulic steering"

B | en_US | See section "Hydraulic propulsion and brake"

C | en_US | Replace hose 4700483716 "Hydraulic steering"

E | en_US | Replace engine hood 4700387147

F | en_US | See section "Hydraulic oil tank"

G | en_US | See section "Hydraulic steering"

This page intentionally left blank

Electric system Electrical equipment

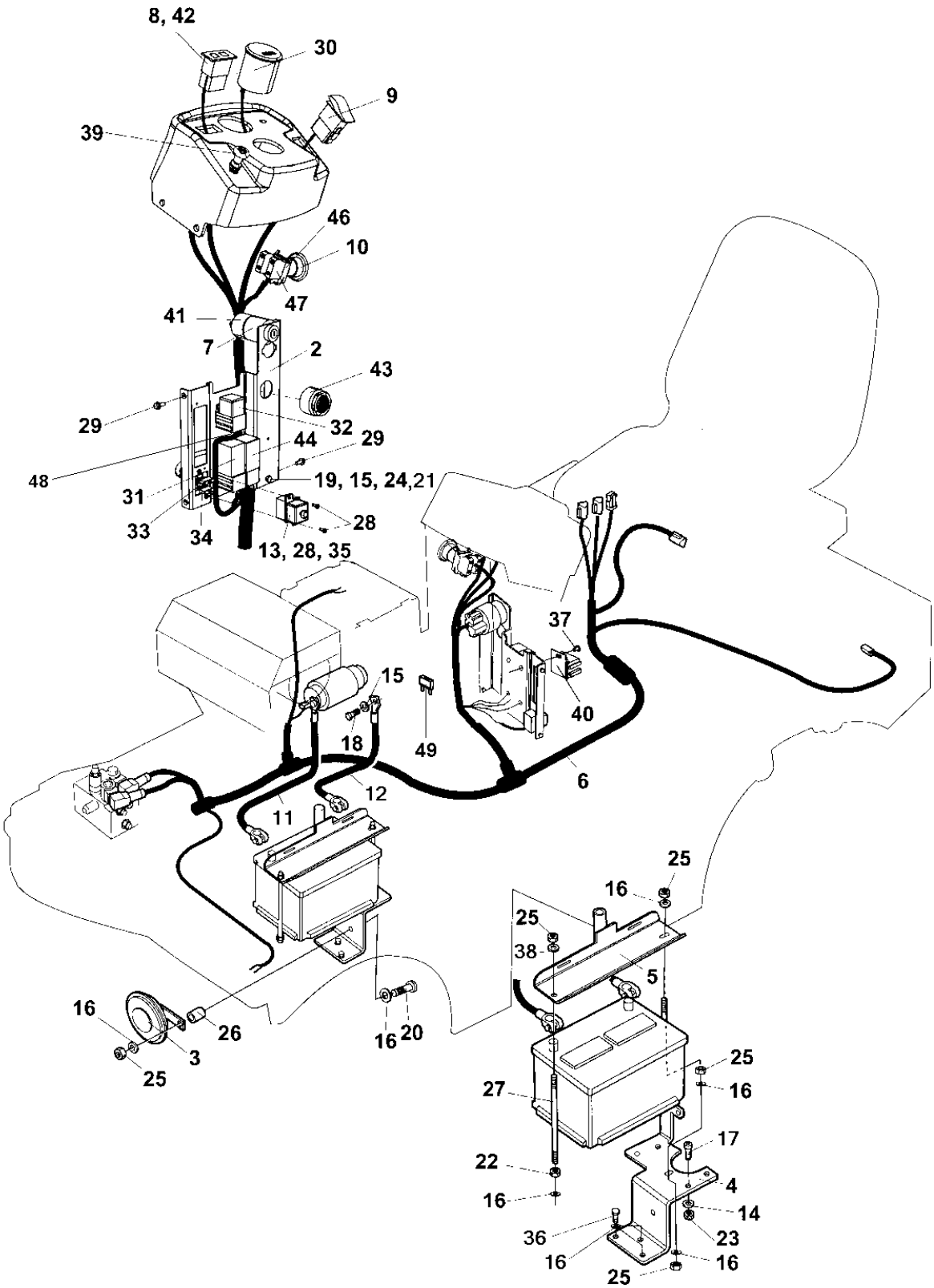

Item	Part No.	Name	Qty	L	SN INFO
1	-	Relay holder	1		
2	4700387683	Distribution control plate	1		
3	4700999027	Horn	1		
4	4700387284	Battery shelf	1		
5	4812270671	Battery holder	1		
6	4812114421	Cable harness	1		
7	4812113204	Ignition switch	1		
7	4700792100	Key	1		
8	4700792075	Display	1		
9	4700791578	Switch, horn	1		
10	4700791739	Emergency stop	1		
11	4700792095	Battery cable (+)	1		
12	4700792096	Battery cable (-)	1		
13	4700792091	Fuse holder	1		
14	4700904698	Steel plain washer	2		
15	4700904228	Washer 6.4x12x1.5 mm 300 HV	2		
16	4700904229	Steel plain washer	8		
17	4700508022	Hexagon socket head cap screw	2		
18	4700500013	Hex. screw	1		
19	4700500040	Screw, M6x20 mm 8.8 A2K	1		
20	4700500024	Screw M8x45	1		
21	4700570004	Hex. nut	1	C	
22	4700570005	Hexagon nut	3		
23	4700923976	Lock nut	2		
24	4700586002	Lock nut M6 -8	1	C	
25	4700586003	Nut, M8	3		
26	4700355704	Spacer sleeve	1		
27	4700791550	Threaded stud	2		
28	4700901767	Screw	2		
29	4700903782	Screw M5x12	4		
30	4700389727	Hour meter	1		
31	4700382782	Relay, VBS	1		
32	4700903956	Relay	1		
33	4700901226	Fuse 7.5A Brown	1		
34	4700901228	Fuse, 15A Blue	1		
35	4700901240	Connector	1		
36	4700500053	Screw, M8x20 mm 8.8 A2K	3		

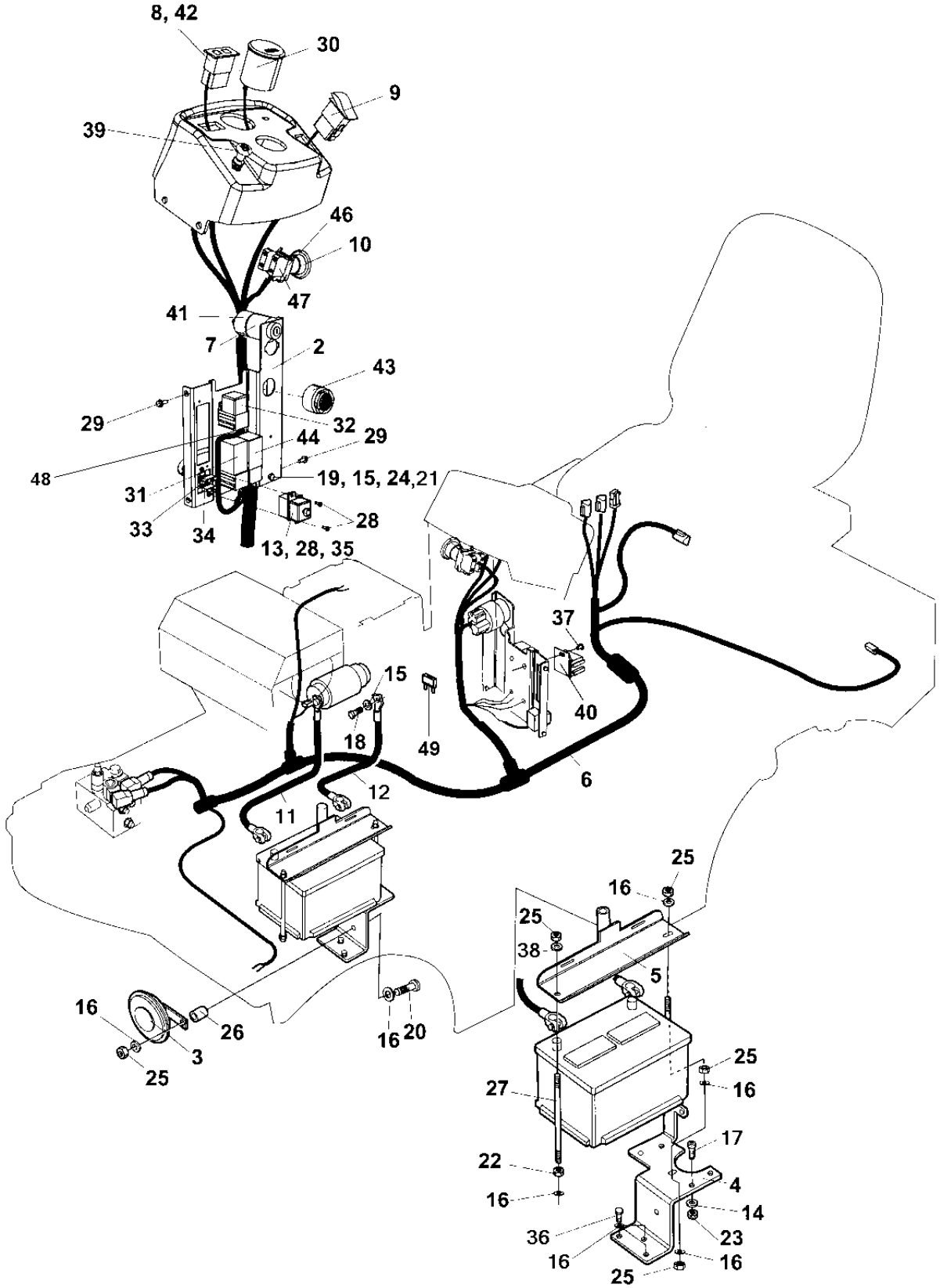
8, 42
30
9
39
46
10
47
41
7
2
43
29
32
44
29
48
19, 15, 24,21
31
33
34
28
13, 28, 35
37
15
40
18
49
6
12
11
25
16
25
38
5
16
26
3
25
16
20
25
27
16
17
22
4
16
14
36
23
16
16
25

Item	Part No.	Name	Qty	L	SN INFO
37	4700902223	Screw	3		
38	4700904640	Washer, 8.4x22x3 mm 300HV	2		
39	-	Relay holder	1	A	
40	-	Relay holder	4		
41	4700792090	Connector	1		
42	4700792191	Gasket	1		
43	4700385599	Buzzer	1	B	
44	4700904846	Delay relay	1	B	
46	4700389840	Connector	1		
47	4700791723	Connector N/C	1		
48	4700202042	Rubber strip	1	D	
49	4700904037	Fuse 30A Green	1		
50	4812265203	Rubber plate	1		

Comments for Page: Electrical equipment

(L)OCAL REMARKS

A | en_US | See section "Forward/reverse control"

B | en_US | Included in rebuild kit 4700940867. (replacement for PN 4700377325)

C | en_US | Not illustrated

D | en_US | L = 0,07 m

Electric system Back-up alarm Option

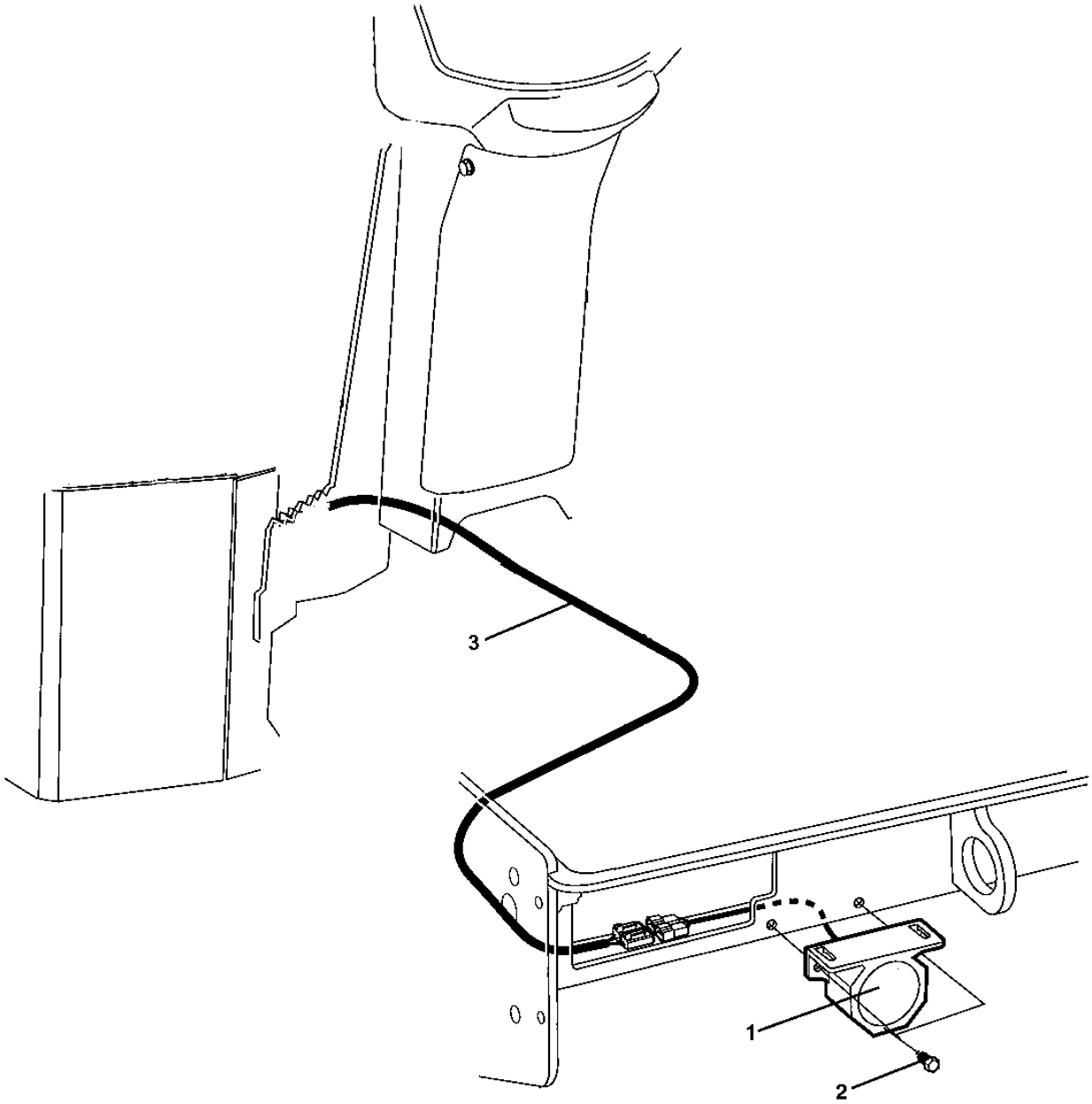

Item	Part No.	Name	Qty	L	SN INFO
1	4700792098	Back-up alarm	1		
2	4700541702	Screw M6x12	2		
3	-	Cable harness	1		

Option / assessories Decals

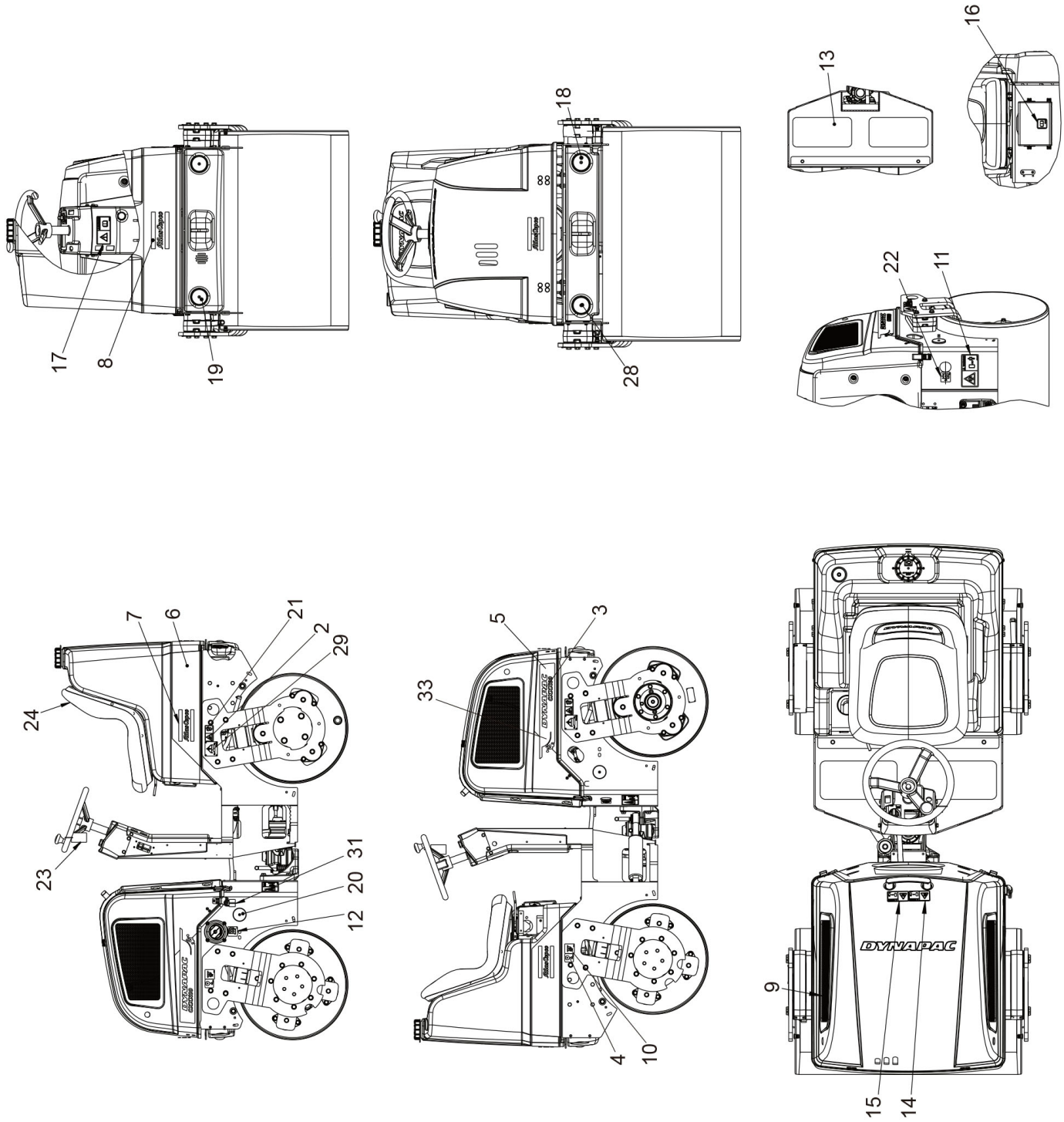

Item	Part No.	Name	Qty	L	SN INFO
2	4700904870	Lifting data plate	2		
3	4812120102	Decal model code std template	2		
4	4700357587	Label lifting point	2		
5	4812120092	Decal "Compaction rocks" Right	1		
6	4812120673	Decal cosmetic	1		
7	4812120119	Decal "Atlas Copco" Black	3		
8	4812120125	Decal "Atlas Copco" White	1		
9		Product identification	1		
10	4700382751	Decal "SECURING POINT/TIE DOWN"	2		
11	4700903422	Safety decal "CRUSH AREA"	2		
12	4700381371	Decal "FUEL"	1		
13	4700373363	Slip protection	2		
14	4700903423	Safety label, Rotating engine components	1		
15	4700903424	Safety label, hot surfaces	1		
16	4700903425	Safety decal "READ SAFETY INSTRUCTIONS"	1		
17	4700903459	Decal "SAFETY"	1		
18	4700791957	Reflector, white	2		
19	4700791956	Reflector, red	2		
20	4700791958	Reflector, light	2		
21	4700908229	Safety decal	2		
22	4700272373	Label, hydraulic oil level	1		
23	4700377066	Loading/Unloading instruction	1		
24	4700348331	Seat protector	1		
28	4700791754	Blind rivet	6		
29	4700624015	Blind rivet 4,0x8,5	8		
30	4700904228	Washer 6.4x12x1.5 mm 300 HV	8		
31	4700358881	Pad lock	1		
33	4812120093	Decal "Compaction rocks" Left	1		

Option / assessories 4812266106 Fuel oil gauge and display alarm option

NO DRAWING
AVAILABLE
FOR THIS BOM

Item	Part No.	Name	Qty	L	SN INFO
1	4812265813	Hour meter	1		
2	4812265814	Fuel level sensor	1		
3	4812266092	Cable harness	1		

Option / assessories 4812268184 LED lamp option

NO DRAWING
AVAILABLE
FOR THIS BOM

Item	Part No.	Name	Qty	L	SN INFO
1	4812268185	Bracket	2		
2	4812268186	Front cover	1		
3	4812265815	Light	2		
4	4812265816	Light	1		
5	4812265817	Switch	1		
6	4812265818	Switch plate	1		
7	4812266099	Wiring harness	1		

Appendix B:Parts Index

1615595300 . . . . . 4, 12
4700111018 . . . . . 22, 58
4700160032 74
4700160041 62
4700160058 . . . . . 18, 28
4700160132 . . . . . 20, 22, 58
4700162005 . . . . . 70, 86
4700162017 . . . . . 58, 62
4700202042 92
4700205067 72
4700232039 74
4700232050 56
4700232210 62
4700272373 96
4700282603 48
4700283711 74
4700297018 30
4700313001 . . . . . 36, 70
4700313002 36
4700313003 36
4700313008 72
4700313023 56
4700313032 24
4700313035 74
4700313102 . . . . . 70, 74, 78
4700313108 . . . . . 70, 74
4700343490 58
4700343744 58
4700348331 96
4700349202 58
4700350029 58
4700355704 90
4700355869 78
4700357138 72
4700357139 72
4700357587 96
4700357643 40
4700358666 58
4700358689 58
4700358881 . . . . . 36, 96
4700372964 78
4700373363 96
4700376595 40
4700376636 78
4700376637 . . . . . 6, 12, 78
4700376861 78
4700377008 44
4700377009 . . . . . 44, 44
4700377010 44
4700377011 44
4700377012 44
4700377013 44
4700377014 44
4700377015 44
4700377016 44
4700377017 44
4700377018 44
4700377019 44
4700377020 44
4700377021 44
4700377023 . . . . . 46, 46
4700377043 30
4700377044 30
4700377061 30
4700377066 96
4700377255 . . . . . 40, 50
4700377293 70
4700377294 72
4700377339 86
4700377454 36
4700377456 . . . . . 34, 36
4700377507 36
4700377508 36
4700377509 36
4700377556 40
4700377599 52
4700377660 52
4700377677 48
4700377704 46
4700377706 46
4700377741 46
4700377857 86
4700377928 28
4700378244 36
4700378759 44
4700379460 74
4700379635 40
4700379907 26
4700381371 96
4700382751 96
4700382782 90
4700383200 48
4700383705 40
4700385599 92
4700386241 58
4700386619 58
4700386620 58
4700386622 . . . . . 58, 62
4700387039 34
4700387043 34
4700387057 26

4700387103 52
4700387137 . . . . . 60, 62
4700387147 30
4700387148 30
4700387151 30
4700387155 . . . . . 26, 28
4700387226 40
4700387270 . . . . . 66, 68
4700387274 78
4700387275 . . . . . 78, 84
4700387277 78
4700387278 72
4700387284 90
4700387345 34
4700387346 34
4700387376 26
4700387424 . . . . . 16, 26, 62
4700387425 . . . . . 26, 62
4700387530 86
4700387552 56
4700387597 66
4700387598 66
4700387676 66
4700387677 . . . . . 26, 52, 66
4700387678 66
4700387683 90
4700387779 26
4700387886 26
4700387935 36
4700387947 30
4700387948 30
4700387949 . . . . . 26, 30
4700387956 30
4700388087 36
4700388153 . . . . . 26, 62
4700388171 . . . . . 18, 28
4700388172 . . . . . 18, 28
4700388173 . . . . . 18, 28
4700388176 . . . . . 26, 28
4700388177 . . . . . 26, 28
4700388178 . . . . . 26, 28
4700388194 72
4700388259 62
4700388386 62
4700388387 62
4700388416 62
4700388460 42
4700388476 42
4700388558 86
4700388559 86
4700388570 52
4700388653 72
4700388688 52
4700388733 30
4700388846 30
4700388849 . . . . . 26, 58, 62
4700388850 . . . . . 26, 58, 62
4700388852 30
4700388960 66
4700389146 86
4700389155 36
4700389196 72
4700389219 36
4700389400 70
4700389402 72
4700389403 . . . . . 66, 70
4700389404 70
4700389408 . . . . . 66, 70
4700389414 72
4700389461 96
4700389727 90
4700389840 92
4700390486 86
4700391379 44
4700391985 . . . . . 16, 58, 62
4700393095 42
4700483646 66
4700483652 70
4700483654 78
4700483655 78
4700483656 78
4700483664 . . . . . 72, 72
4700483689 . . . . . 66, 70
4700483707 . . . . . 66, 70
4700483708 . . . . . 66, 70
4700483709 . . . . . 66, 70
4700483710 78
4700483711 72
4700483712 70
4700483713 86
4700483714 70
4700483715 86
4700483716 78
4700500004 56
4700500012 . . . . . 56, 58, 86
4700500013 . . . . . 42, 56, 74, 90
4700500018 86
4700500019 26
4700500021 . . . . . 40, 62
4700500022 . . . . . 58, 86
4700500024 . . . . . 34, 90
4700500029 36

4700500030 40
4700500031 . . . . . 58, 78
4700500032 52
4700500033 52
4700500035 26
4700500040 90
4700500048 78
4700500050 . . . . . 18, 28
4700500053 . . . . . 30, 42, 52, 66, 74, 78, 90
4700500067 . . . . . 26, 34, 52
4700500068 . . . . . 30, 66
4700500070 62
4700500105 34
4700500109 52
4700500176 26
4700500212 58
4700500280 . . . . . 58, 62
4700508002 72
4700508022 . . . . . 30, 90
4700508029 . . . . . 58, 70
4700508063 48
4700508068 44
4700508092 . . . . . 42, 74
4700508094 72
4700513004 42
4700513027 . . . . . 40, 50
4700527002 . . . . . 58, 62
4700541702 94
4700570004 . . . . . 44, 44, 90
4700570005 90
4700573008 48
4700586001 44
4700586002 . . . . . 30, 90
4700586003 . . . . . 26, 30, 34, 34, 40, 44, 86, 90
4700586018 52
4700586019 44
4700624015 96
4700635061 48
4700791120 74
4700791226 40
4700791395 . . . . . 72, 74
4700791408 . . . . . 78, 86
4700791412 . . . . . 72, 78
4700791425 . . . . . 20, 58
4700791426 . . . . . 20, 22, 58
4700791433 . . . . . 20, 58
4700791493 52
4700791535 66
4700791536 52
4700791537 66
4700791538 70
4700791541 . . . . . 70, 72
4700791542 78
4700791550 90
4700791565 78
4700791578 90
4700791630 70
4700791631 72
4700791635 86
4700791643 30
4700791699 . . . . . 70, 72
4700791700 72
4700791723 92
4700791739 90
4700791754 . . . . . 30, 56, 96
4700791794 72
4700791938 . . . . . 34, 34
4700791939 34
4700791956 96
4700791957 96
4700791958 96
4700791961 . . . . . 26, 28
4700791962 . . . . . 18, 28
4700791972 . . . . . 26, 62
4700792064 36
4700792065 36
4700792068 78
4700792073 . . . . . 36, 36, 36, 36
4700792074 70
4700792075 90
4700792079 52
4700792090 92
4700792091 90
4700792092 72
4700792094 70
4700792095 90
4700792096 90
4700792098 94
4700792100 90
4700792132 30
4700792134 34
4700792147 56
4700792149 . . . . . 26, 30
4700792191 92
4700792321 72
4700792611 . . . . . 18, 28
4700900986 48
4700901157 72
4700901174 36
4700901226 90
4700901228 90
4700901240 90

4700901767 90
4700902123 78
4700902166 . . . . . 30, 40, 86
4700902223 92
4700902287 34
4700902379 26
4700902919 40
4700903154 58
4700903192 36
4700903374 . . . . . 60, 62
4700903422 96
4700903423 96
4700903424 96
4700903425 96
4700903459 96
4700903782 90
4700903856 30
4700903956 90
4700903957 36
4700903958 36
4700903959 36
4700904009 . . . . . 66, 70
4700904037 92
4700904116 36
4700904137 . . . . . 24, 56
4700904214 26
4700904228 . . . . . 26, 30, 42, 56, 58, 86, 90, 96
4700904229 . . . . . 30, 34, 34, 40, 42, 48, 66, 74, 78, 86, 90
4700904230 . . . . . 52, 72, 78
4700904231 . . . . . 26, 48, 60, 62
4700904281 . . . . . 36, 50, 56
4700904506 48
4700904556 . . . . . 26, 30, 52, 86
4700904557 . . . . . 40, 52, 58, 62, 70
4700904558 . . . . . 58, 62
4700904563 46
4700904567 36
4700904640 . . . . . 26, 34, 52, 58, 62, 92
4700904641 . . . . . 66, 86
4700904696 36
4700904698 . . . . . 40, 90
4700904703 . . . . . 58, 62
4700904727 70
4700904735 . . . . . 56, 72, 74, 74
4700904755 . . . . . 40, 42
4700904766 86
4700904846 92
4700904870 96
4700908229 . . . . . 48, 96
4700921028 70
4700923270 30
4700923680 36
4700923735 36
4700923962 36
4700923976 . . . . . 40, 50, 90
4700924986 36
4700925519 . . . . . 58, 62
4700926215 . . . . . 26, 26, 62
4700926537 44
4700927233 46
4700927568 52
4700928381 30
4700928830 78
4700929191 26
4700935429 82
4700935438 56
4700935613 78
4700935614 78
4700939693 36
4700940374 44
4700940671 14
4700940929 46
4700940930 46
4700945407 44
4700945526 . . . . . 78, 84
4700945531 68
4700945532 68
4700945551 16
4700945658 68
4700945668 84
4700945710 20
4700945711 22
4700945777 56
4700945928 . . . . . 18, 28
4700947684 . . . . . 52, 78
4700947687 . . . . . 60, 62
4700947694 . . . . . 58, 62
4700999027 90
4811000486 56
4812008274 12
4812111852 42
4812111853 30
4812111856 52
4812111858 42
4812112074 . . . . . 36, 36
4812112801 56
4812113204 90
4812114421 90
4812114464 56
4812114466 40
4812114852 56
4812114877 56

4812115007 56
4812115054 86
4812115518 56
4812115526 56
4812117376 56
4812118170 72
4812120092 96
4812120093 96
4812120102 96
4812120119 96
4812120125 96
4812120570 30
4812120673 96
4812156170 16
4812156798 68
4812156996 70
4812157468 40
4812157555 76
4812159159 82
4812159160 82
4812159771 84
4812160652 68
4812160653 68
4812265011 72
4812265203 92
4812265813 98
4812265814 98
4812265815 100
4812265816 100
4812265817 100
4812265818 100
4812266092 98
4812266099 100
4812268185 100
4812268186 100
4812269392 . . . . . 14, 34
4812269817 52
4812269818 . . . . . 52, 54
4812269863 24
4812269864 24
4812269865 24
4812270158 48
4812270592 48
4812270593 48
4812270598 48
4812270631 26
4812270661 58
4812270662 62
4812270671 90
4812270679 52
4812270686 40
4812270724 48
4812270725 48
4812270726 58
4812270732 26
4812270737 30
4812270738 30
4812270762 30
4812270765 72
4812270766 72
4812270768 48
4812274527 54
4812274528 54
4812274529 54
4812274530 . . . . . 4, 8, 12, 54
4812274531 54
4812274532 54
4812274533 54
4812274534 54
4812274535 . . . . . 8, 12, 54
4812274536 54
4812274537 54
4812274538 54
4812274539 54
4812274540 . . . . . 8, 12, 54
4812274541 54
4812274542 54
4812274543 . . . . . 10, 12, 54
4812274544 54
4812274545 54
4812274600 54
4812274601 54
4812274602 54
4812274605 4
4812274607 8
4812274609 12
4812313026 70
4812313158 72
4812313159 72
4812313160 72
4812313161 . . . . . 72, 72
5580020624 8

Any unauthorized use or copying of the contents or any part thereof is prohibited. This applies in particular to trademarks, model denominations, part numbers, and drawings.