CT3000

Spare parts list

Tamping Roller

CT3000 Tier 4i s/n 10000505x0B003750 -
Engine: Cummins QSB 6.7

© 2015 Atlas Copco Construction Technique Brasil Ltda | No. 4812316461| 2015-06

General information

Use only authorized parts. Any damage or malfunction caused by the use of unauthorized parts is not covered by Warranty or Product Liability.
Any unauthorized use or copying of the contents or any part thereof is prohibited. This applies in particular to trademarks, model denominations, part numbers, and drawings.

Instructions for use
This spare parts list contains no safety regulations and is merely intended to assist in the ordering of spare parts.
For information about operating, servicing, or repairing, the relevant Safety and operating instructions must be consulted at all costs.
Please observe the safety instructions listed in the relevant Safety and operating instructions!

Any unauthorized use or copying of the contents or any part thereof is prohibited. This applies in particular to trademarks, model denominations, part numbers, and drawings.

Contents

Service, repair and wear part kits

4812101725 Service kit 50 h . . . 1
4812101726 Service kit 250 h/750 h . . . 3
4812101727 Service kit 500 h . . . 5
4812101732 Service kit 500 h with cabin . . . 7
4812101728 Service kit 1000 h . . . 9
4812101743 Service kit 1000 h with cabin . . . 11
Shock absorber kit . . . 13
Shock absorber kit . . . 15

Mechanical

4812101688 Side covers assy . . . 17

4812100666 Frame assembly

4812100666 Frame assembly . . . 19

4812100555 Front frame module

4812100555 Front frame module . . . 21
4812101789 Measuring panel assy . . . 23
4812101248 Lubrication Kit . . . 25
4812100955 Cradle Module . . . 27
4812100953 Lock Module . . . 29

4812100556 Rear Frame Module

4812100556 Rear Frame Module . . . 31
4812100969 Bulkheads Left . . . 33
4812100967 Bulkheads right . . . 35
4812100965 Exhaust Bracket Module . . . 37
4812101059 Ladder Module . . . 39
4812100963 Frame Transm Cover Module . . . 41
4812100961 Battery Box Drain Module . . . 43
4812100958 Frame Cover Module Right . . . 45
4812100956 Frame Cover Module Left . . . 47

4812100678 Features assembly

4812100678 Features assembly . . . 49
4812101026 Cover Module Left . . . 51
4812101027 Cover Module Right . . . 53
4812101031 Cover Module Left . . . 55
4812101032 Cover Module Right . . . 57
4812101029 Mudguard Module Right . . . 59
4812101028 Mudguard Module Left . . . 61
4812101040 Hydraulic tank module . . . 63
4812101204 Front drive lights right module . . . 65
4812101201 Front drive lights module . . . 67
4812101407 Handrail module . . . 69
4812101646 Shock absorver module . . . 71
4812101653 Bracket module . . . 73
4812101650 Shock absorber assy . . . 75
4812101655 Lock assy . . . 77
4812101044 Rear Grid Cover Module . . . 79
4812101043 Rear Cover Module Top . . . 81
4812101042 Rear Cover Module Right . . . 83
4812101039 Rear Cover Module Left . . . 85
4812101037 Exhaust Guard Module . . . 87

4812101023 Engine Cover Module

4812101023 Engine Cover Module . . . 89
4812101025 Expansion tank module . . . 91

4812100561 Engine Cover Module Right

4812100561 Engine Cover Module Right . . . 93

4812101021 Engine Cover Right
4812101021 Engine Cover Right . . . 95
4812100563 Locking Device Assembly . . . 97

4812100562 Engine Cover Module Left
4812100562 Engine Cover Module Left . . . 99

4812101022 Engine Door Assy Left
4812101022 Engine Door Assy Left . . . 101
4812100563 Locking Device Assembly . . . See page 97

4812101030 Support Tank Module
4812101030 Support Tank Module . . . 104

4812101035 Tank Bracket Assy
4812101035 Tank Bracket Assy . . . 107
4812101799 Drail kit . . . 109
4812101033 Oil Filter Module . . . 111

4812315964 Scraper module
Scraper module EU/US . . . 113

4812315932 Scraper module
Scraper assy left . . . 115
Scraper assy right . . . 117
Scraper assy left . . . 119

4812315937 Scraper assy right
Scraper module right . . . 121
Scraper assy right . . . 123

4812315931 Scrapers assy
Scraper assy right . . . 125
Scraper assy right . . . 127

4812315930 Scrapers assy left
Scraper module left . . . 129
Scraper assy left . . . 131
Handrail module . . . 133
Scraper assy . . . 135

4812315934 Scrapers assy
Scraper module . . . 137
Scraper assy . . . 139

4812315933 Scraper assy rear
Scraper assy . . . 141
Scraper assy right . . . See page 117

4812315923 Scraper tooth
Scraper . . . 144

Operator platform
4700391090 Seat comfort module . . . 147
4812101254 Cab heater system . . . 149
4700391081 Seat module . . . 151
4812114766 Rear view mirror module . . . 153

4812101000 Cab module
4812101000 Cab module . . . 155
4812101243 Cover module . . . 157
4812101854 Cover kit . . . 159
4812100839 Wiring Harness Kit . . . 161

Cab assembly
Cab assembly 163

Cab
Cab 165

Assembly left side
Assembly left side 167

Accessories left side
Accessories left side 169

Glasswork door side
Glasswork door side 171

Rear plastics assembly
Rear plastics assembly 173

Cabin frame
Cabin frame 175

Glasswork wind screen
Glasswork windscreen 177

Door assembly
Door assembly 179

General installation accessories
General installation accessories 181

Electric assembly
Cab, electrics 183

Windscreen wipersystem
Windscreen wipersystem 185

Rear glass wiper
Rear glass wiper set 187

Washer equipments
Washer equipments 189

Assembly heater unit
Heater mount 191

Heater
Heater 193
Heater controls 195

Air channel assy
Air channel assy 197

Mounting right side
Protective frame asymmetric 199

Cover assy, right side
Cover assy, right side 201

Glasswork right side
Glasswork right side 203

Wiper system right side
Wiper system right side 205

Windshield wiper, assymetric side
Windshield wiper, assymetric side . . . 207

Windshield washer reservoir assy
Windshield washer reservoir assy . . . 209

Fastner kit, right side ceiling
Fastener kit, right side ceiling . . . 211

Manual box
Manual box . . . 213

4812101273 Rops
4812101273 Rops . . . 215
Manual box . . . See page 213
4812101243 Cover module . . . See page 157

4812100910 Suspension assembly
4812100910 Suspension assembly . . . 218
4812100964 Pneumatic Spring Module . . . 221
4812101677 Damper Module . . . 223
4812101676 Damper Module . . . 225
4812100523 Cushions Module . . . 227

4812100582 Seat frame bracket
4812100582 Seat frame bracket . . . 229

Control arm module
Control Arm Module . . . 231
4700391103 Display module . . . 233

Seat frame assy
Seat frame assy . . . 235
4700391163 Steering column . . . 237

Seat frame assy
Seat frame assy . . . 239
4700395462 Brake pedal . . . 242

Engine
4812100673 Air cleaner hose module . . . 245
4812100676 Exhaust Tube Module . . . 247
4812100687 Fuel Hoses Kit . . . 249
4812100894 Decal Kit Tier 4 . . . 251
4812100896 DPF Module . . . 253
4812101058 Propeller module . . . 255
4812100960 Air filter module . . . 257

4812100672 Engine Module Tier 4i
4812100672 Engine Module Tier 4i . . . 259
Fan module . . . 261
4812101832 Module deflector . . . 263
4812100670 Diesel Engine Tier 4i . . . 265
4812100670 Engine sensors . . . 267

4812100950 Fuel system
4812100950 Fuel system . . . 269

4812100908 Fuel Hose Kit
4812100908 Fuel Hose Kit . . . 271
4812101798 Bracker kit . . . 273

4812101353 Fuel tank module

4812101353 Fuel tank module . . . 275
4812100909 DP240 module . . . 277

4812100970 Exhaust tubes module
4812100970 Exhaust tubes module . . . 279
4812101871 Bracket module . . . 281

4812100677 Cooling system module
4812100677 Cooling system module . . . 283

4812100973 Cooling Assembly
4812100973 Cooling Assembly . . . 285
4812100848 Wiring harness cooler box . . . 288
4812101753 Measure kit . . . 291
4812100977 Cover module . . . 293
4812101358 Cover module . . . 295
4812100975 Cover module . . . 297
4812100974 Hydraulic Motor Bracket . . . 299
4812100905 Fan Drive Module . . . 301
4812100903 Reversing Valve Module . . . 303
4812100902 Cooling Hoses Kit . . . 305
4812100901 Oil Cooler Module . . . 307
4812100981 Water cooler module . . . 309
4812100979 CAC Module . . . 311

Drive
4812100940 Rim and tire assembly . . . 313
4812100920 Drum kit, STD . . . 315
4812101238 Drum kit 60 PTN . . . 317
4812101233 Drum kit 60 PUSA . . . 319

4812100930 Driven System
4812100930 Driven System . . . 321
4812100952 Bearing Module . . . 323
4812100951 Cardan Shaft Module . . . 325
4812100949 Cardan Shaft Module . . . 327
4812100948 Cardan Shaft Module . . . 329
4812100946 Driven Axle Module . . . 331

4812100945 Driven Axle Module
4812100945 Driven Axle Module . . . 333
Carrier group . . . 335
Housing group . . . 338
Wheel end group . . . 341

Hydraulic system
4812100683 Transmission Hydraulic System . . . 344

CT30001004 Brakes
CT30001004 Brakes . . . 347
CT300010042 Wet disc brake . . . 349
4700170398 Brake head assembly . . . 351

CT300010041 Output shaft brake
CT300010041 Output shaft brake . . . 353
4700170398 Brake head assembly . . . See page 351

4812100682 Brake module
4812100682 Brake module . . . 356
Brake System Hose Kit . . . 359
Brake System Hose Kit . . . 361
Brake System Hose Kit . . . 363
Brake System Hose Kit . . . 365
4812101053 Brake System Hose Kit . . . 367

4812101050 Valve and Accumulators Assy

4812101050 Valve and Accumulators Assy . . . 369
4812101051 Accumulator Assy . . . 371
4812101048 Brake Valve Module . . . 373

4812100925 Transmission assembly

4812100925 Transmission assembly . . . 375
Transmission Hose Kit . . . 377
Transmission Hose Kit . . . 379
Transmission Hose Kit . . . 381
4812100943 Transmission Hose Kit . . . 383
4812100928 Cradle Module . . . 385

4812100931 Transmission Module

4812100931 Transmission Module . . . 387
4812101793 Drain hose kit . . . 389
4812101757 Module fixation of connections . . . 391
4812100941 Manifold 2 Assembly . . . 393
4812100938 Steering Pump Module . . . 395
4812100933 Brake Pump Module . . . 397
4812100936 Fan Drive Pump Module . . . 399

4812100932 Transmission

4812100932 Transmission . . . 401

4812101120 Transmission case & torque converter 3600 Series - 4 speed

4812101120 Transmission case & torque converter 3600 Series - 4 speed . . . 403
Pump adapter assembly . . . 405
Electric control & less declutch assembly . . . 407
Pressure regulating valve & charging pump . . . 411
Output shaft assembly . . . 414
Idler shaft assembly . . . 417
4th speed clutch shaft . . . 419
1st speed clutch shaft assembly . . . 421
Reverse and 2nd shaft clutch . . . 423
3rd speed clutch shaft . . . 426
Forward clutch shaft . . . 429
Pump drive assembly . . . 431
Drive plates assembly . . . 433
Wheel assembly . . . 435
Turbine shaft, stator support & oil buffle . . . 437
Rear cover & dipstick . . . 439
Housing assembly . . . 443
Clutch shaft assy group . . . 446

4812100915 Steering system

4812100915 Steering system . . . 449
4812100921 Manifold Module . . . 451
Hose kit . . . 453
Hose kit . . . 455
Hose kit . . . 457
Hose kit . . . 459
4812100919 Hose kit . . . 461
4812100916 Steering Cylinders Assy . . . 463
4812100913 Flow Multiplier Module . . . 465

4812100575 Steering Valve Assy

4812100575 Steering Valve Assy . . . 467
4812100972 Hose kit . . . 469
4812100568 Hose bracket module . . . 471
4812100569 Steering valve . . . 473
4812101045 Seat Bracket Mounting Assy . . . 475

Electric system

4812100980 Electrical system
4812100980 Electrical system 477

4700391634 Battery disconnector module
4700391634 Battery disconnector module 479

4700391635 Battery disconnector
4700391635 Battery disconnector 481

4812101061 Transmission APCU Module
4812101061 Transmission APCU Module 483

4812101062 Transmission APCU Assy
4812101062 Transmission APCU Assy 485

4812100863 Battery Cable Kit
4812100863 Battery Cable Kit 487

4812101197 Battery module
4812101197 Battery module 489

4812101198 Battery Assy
4812101198 Battery Assy 491

4812101215 Alert Sound Kit
4812101215 Alert Sound Kit 493

4700396834 Back up Alarm Module
4700396834 Back up Alarm Module 495

4700396836 Horn module
4700396836 Horn module 497

4812101855 Sensor module
4812101855 Sensor module 499

4700391632 Electrical box module
4700391632 Electrical box module 501

4700391633 Electrical box
4700391633 Electrical box 503

4812100858 Wiring Harness Kit
4812100858 Wiring Harness Kit 505

4812100859 Wiring harness frame
4812100859 Wiring harness frame 507

4812100860 Wiring harness power suplier
4812100860 Wiring harness power suplier 509

4812100199 Wiring harness go home
4812100199 Wiring harness go home 511

Options / Accessories

4812100685 Decal kit
Decal, kit 513

Protection cover for cylinder
Protection cover module 520

4812100998 6-Way Blade
4812100998 Blade complete assy . . . 523
4812100992 Flow regulator module . . . 525
4812100876 Wiring Harness Kit . . . 527
4812101009 Blade control module . . . 529
4812101007 Block manifold module . . . 531
4812101005 Joystick assy . . . 533
4812101003 Valve block module . . . 535
4812101002 Valve module . . . 537
4812100990 Pilot oil supply module . . . 539
4812100935 Tube bracket module . . . 541
Hose blade kit . . . 543
Hose blade kit . . . 545
Hose blade kit . . . 547
Hose blade kit . . . 549
4812100997 Hose blade kit . . . 551
4812101070 Hose clamp module . . . 553
4812100108 Bracket kit . . . 555

4812100684 Tilt blade module
4812100684 Tilt blade module . . . 557
4812101844 Mounting the display device height . . . 559
Bracket visualization . . . 561
4812101398 Cylinder module . . . 563
4812101396 Cylinder module . . . 565
4812101019 Blade cylinder module . . . 567
4812101016 Blade equipped module . . . 569
4812101014 Blade cylinder module . . . 571
4812101010 Blade arm module . . . 573

4812316155 2-Way Blade
Tilt blade . . . 575
Leveling blade kit . . . 577
Levelling blade module . . . 579
Joystick hoses kit . . . 581
Joystick assy . . . 583

4812101214 Night work lights
4812101214 Night work lights . . . 585
Bracket module . . . 587
Bracket module . . . 589
Working light module H3 . . . 591
Reading light module . . . 593

4812101245 Air conditioning assy
4812101245 Air conditioning assy . . . 595

Condensor
Condensor module . . . 597
Condensor . . . 599

Evaporator module
Evaporator module . . . 601

4700393584 Evaporator unit
4700393584 Evaporator unit . . . 603

4812100987 Compressor module
4812100987 Compressor module . . . 605
4812101076 Bracket module . . . 607

ACC module
ACC module . . . 609

ACC controls 611

4812101199 Drive lights kit

4812101199 Drive lights kit 613
4812100842 Wiring Harness Kit 615
4700392449 Steering column switch 617
4812101210 Rear drive lights right module 619
4812101207 Rear drive lights module 621
4700392375 Reg. plate light module 623
4812110250 Bracket module 625
4812100101 Direction indicator module 627

4700392279 Harness and switch module

4700392279 Harness and switch module 629
4812110898 Wiring harness steering column 631

Service, repair and wear part kits 4812101725 Service kit 50 h

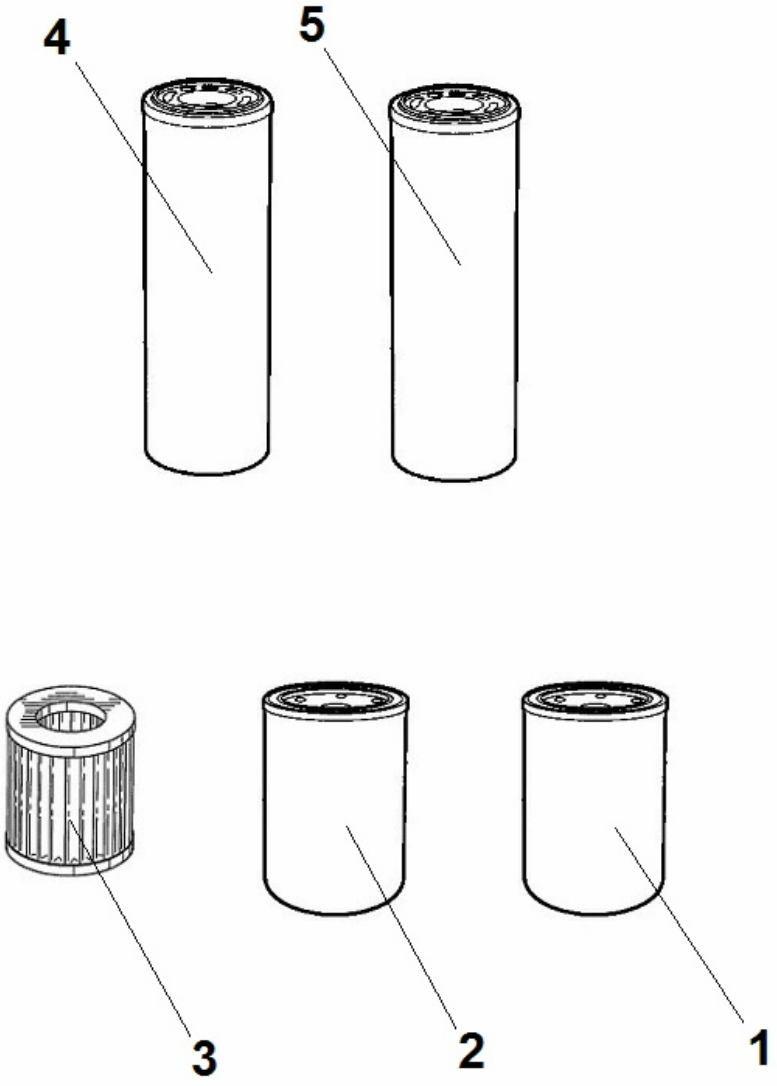

Item	Part No.	Name	Qty	L
0	4812101725	Service kit 50 h	1	
1	4812101723	Oil filter	1	
2	4812101724	Fuel filter element	1	
3	4812101417	Prefuel filter element	1	
4	4700372229	Hydraulic oil filter element	2	
5	4700199591	Transmission oil filter	2	

Service, repair and wear part kits 4812101726 Service kit 250 h/750 h

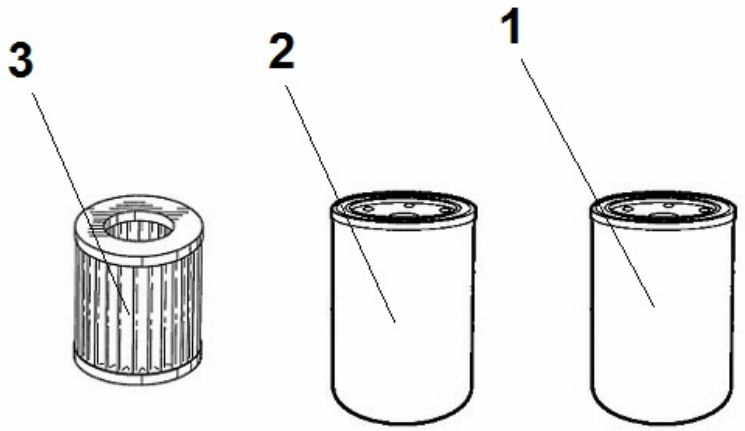

Item	Part No.	Name	Qty	L
0	4812101726	Service kit 250 h/750 h	1	
1	4812101723	Oil filter	1	
2	4812101724	Fuel filter element	1	
3	4812101417	Prefuel filter element	1	

Service, repair and wear part kits 4812101727 Service kit 500 h

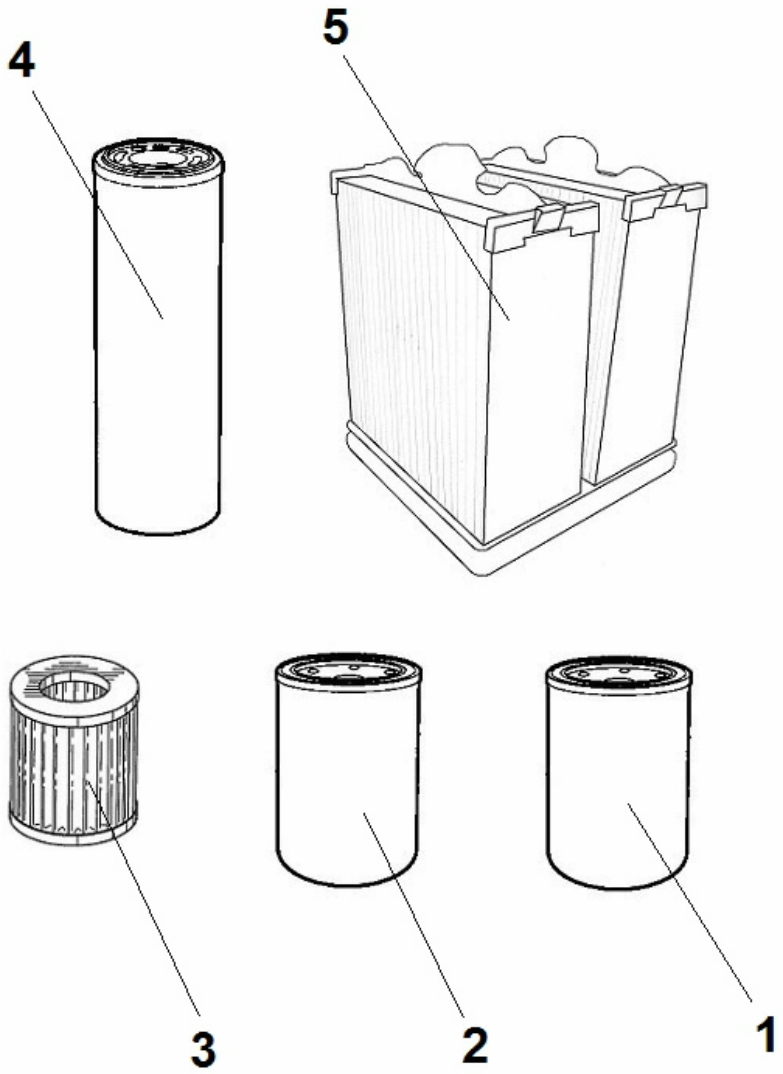

Item	Part No.	Name	Qty	L
0	4812101727	Service kit 500 h	1	
1	4812101723	Oil filter	1	
2	4812101724	Fuel filter element	1	
3	4812101417	Prefuel filter element	1	
4	4700199591	Transmission oil filter	2	
5	4812101418	Primary filter element	1	

Service, repair and wear part kits 4812101732 Service kit 500 h with cabin

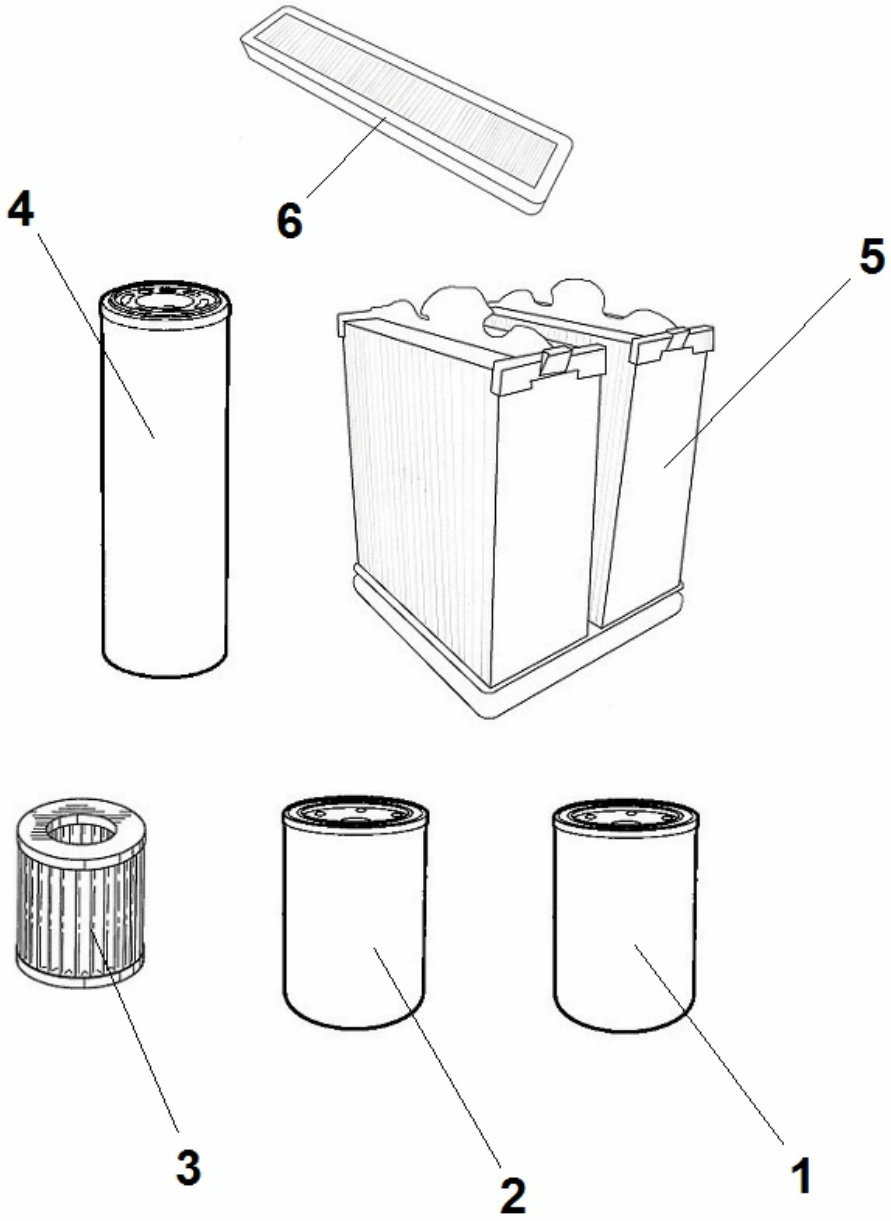

Item	Part No.	Name	Qty	L
0	4812101732	Service kit 500 h with cabin	1	
1	4812101723	Oil filter	1	
2	4812101724	Fuel filter element	1	
3	4812101417	Prefuel filter element	1	
4	4700199591	Transmission oil filter	2	
5	4812101418	Primary filter element	1	
6	4700395818	Filter	1	

Service, repair and wear part kits 4812101728 Service kit 1000 h

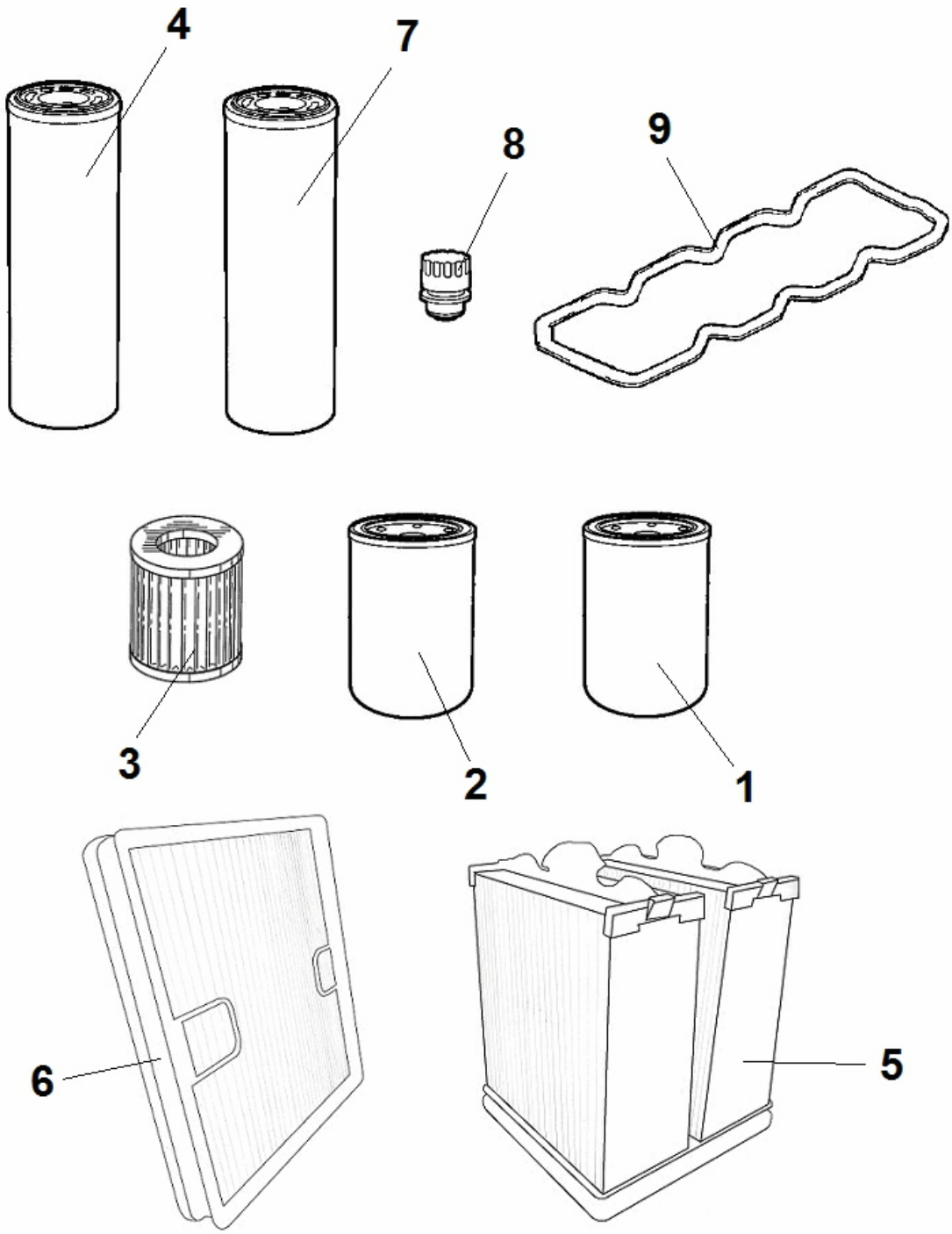

Item	Part No.	Name	Qty	L
0	4812101728	Service kit 1000 h	1	
1	4812101723	Oil filter	1	
2	4812101724	Fuel filter element	1	
3	4812101417	Prefuel filter element	1	
4	4700199591	Transmission oil filter	2	
5	4812101418	Primary filter element	1	
6	4812101419	Secondary filter element	1	
7	4700372229	Hydraulic oil filter element	2	
8	4700357138	Ventilating filter	1	
9	4812101805	Valve cover gasket	1	

Service, repair and wear part kits 4812101743 Service kit 1000 h with cabin

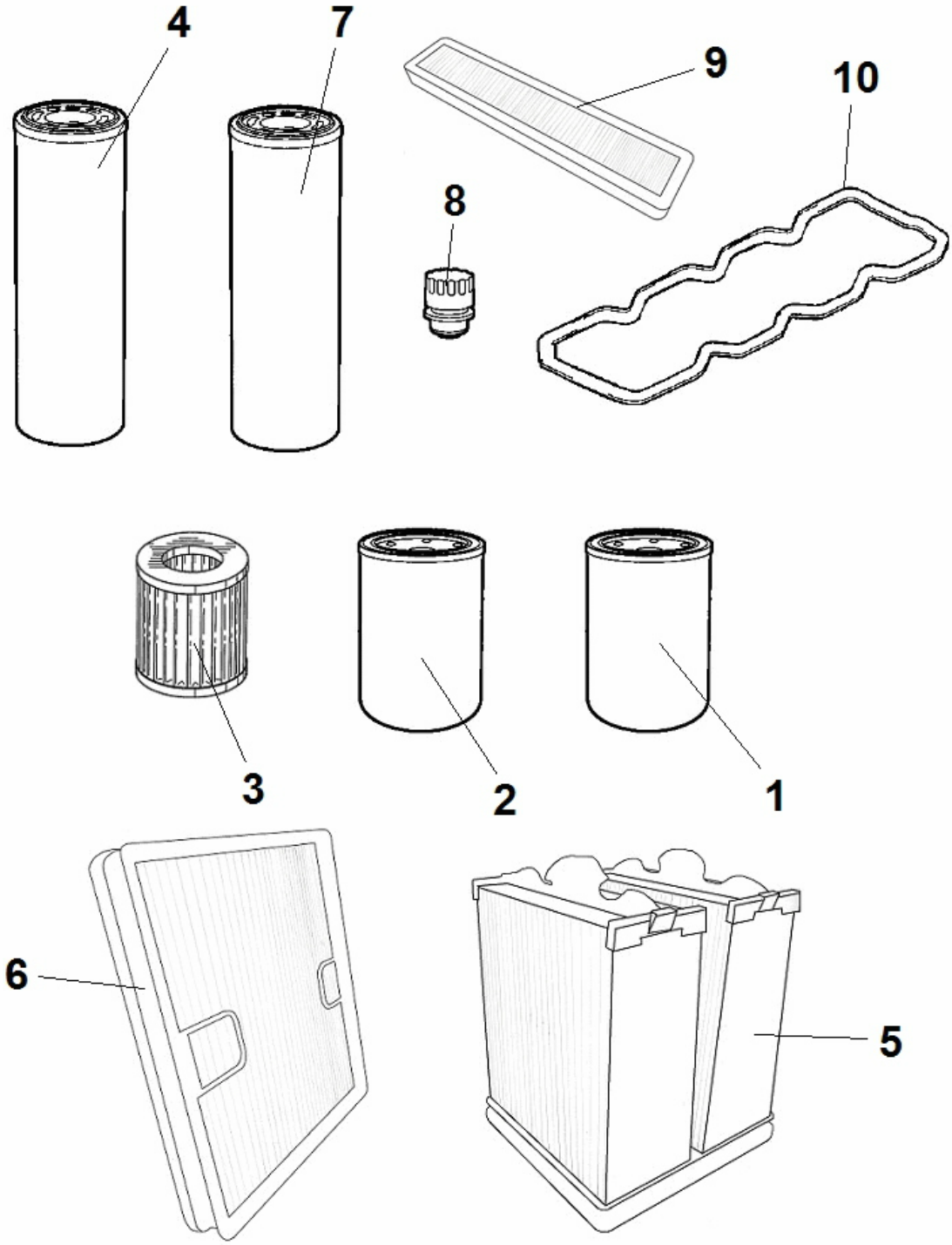

Item	Part No.	Name	Qty	L
0	4812101743	Service kit 1000 h with cabin	1	
1	4812101723	Oil filter	1	
2	4812101724	Fuel filter element	1	
3	4812101417	Prefuel filter element	1	
4	4700199591	Transmission oil filter	2	
5	4812101418	Primary filter element	1	
6	4812101419	Secondary filter element	1	
7	4700372229	Hydraulic oil filter element	2	
8	4700357138	Ventilating filter	1	
9	4700395818	Filter	1	
10	4812101805	Valve cover gasket	1	

Service, repair and wear part kits Shock absorber kit

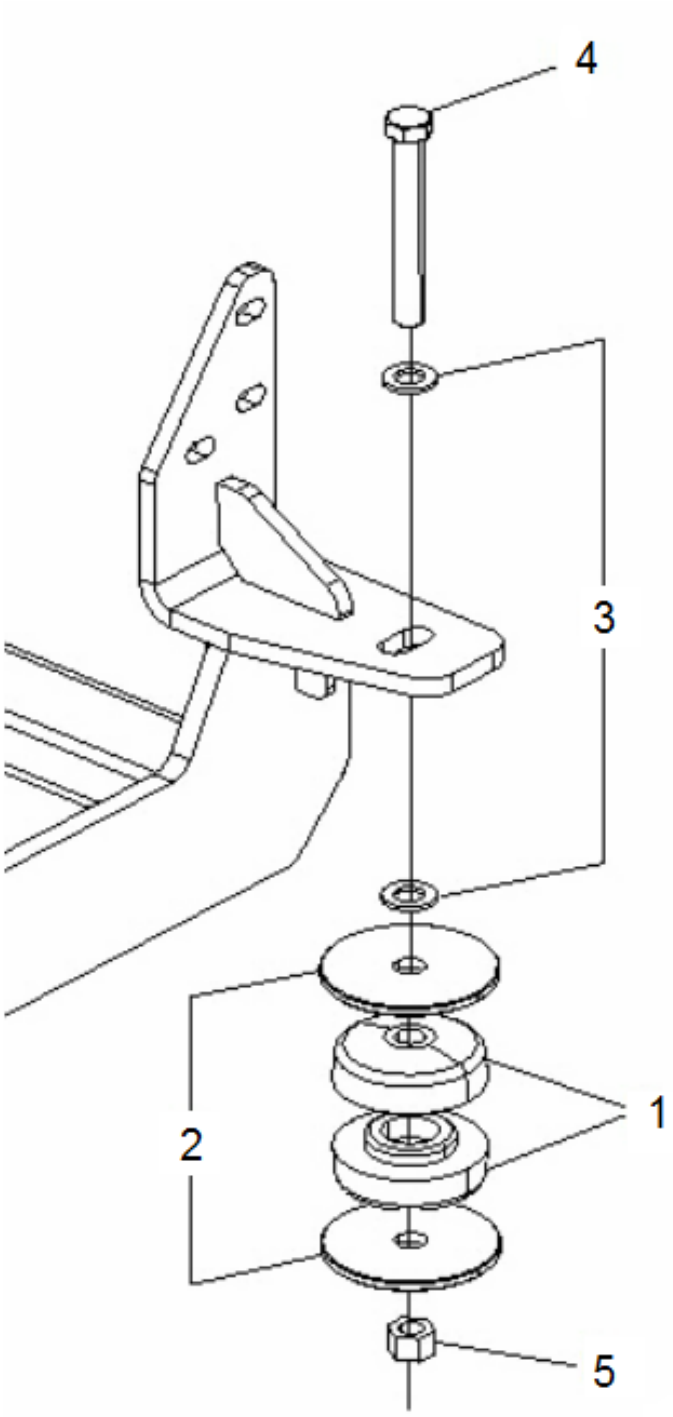

Item	Part No.	Name	Qty	L
0	4812101738	Shock absorber kit	1	
1	4700263355	Cushion	12	
2	4812316094	Washer	12	
3	4700904793	Steel plain washer	12	
4	4700923569	Screw	6	
5	4700586116	Nut	6	

Service, repair and wear part kits Shock absorber kit

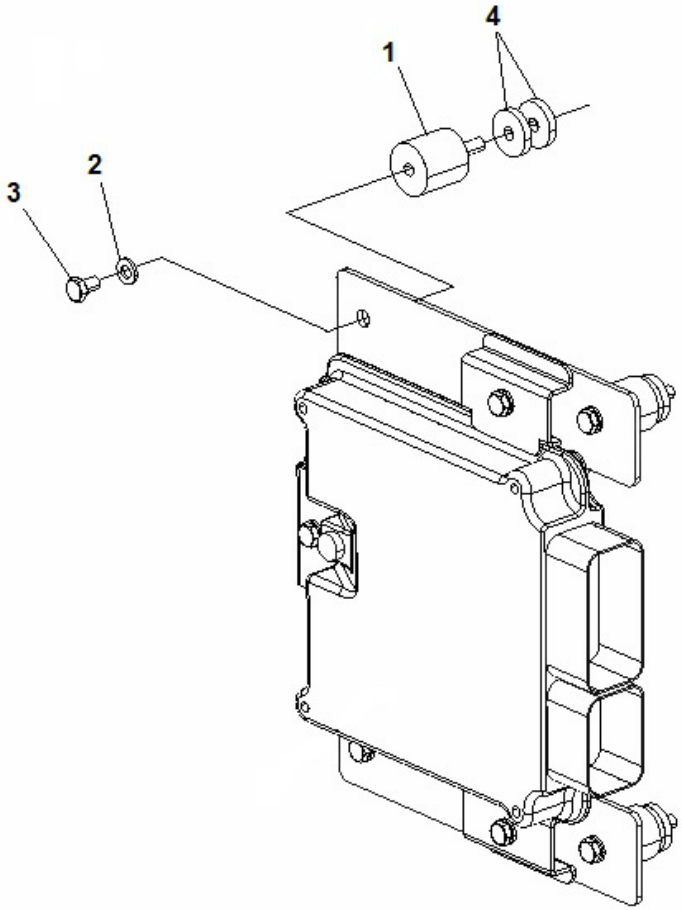

Item	Part No.	Name	Qty	L
0	4812101739	Shock absorber kit	1	
1	4700371774	Shock absorber	4	
2	4700904228	Steel plain washer	4	
3	4700500059	Hex. screw	4	
4	4700904735	Steel plain washer	8	

Mechanical 4812101688 Side covers assy

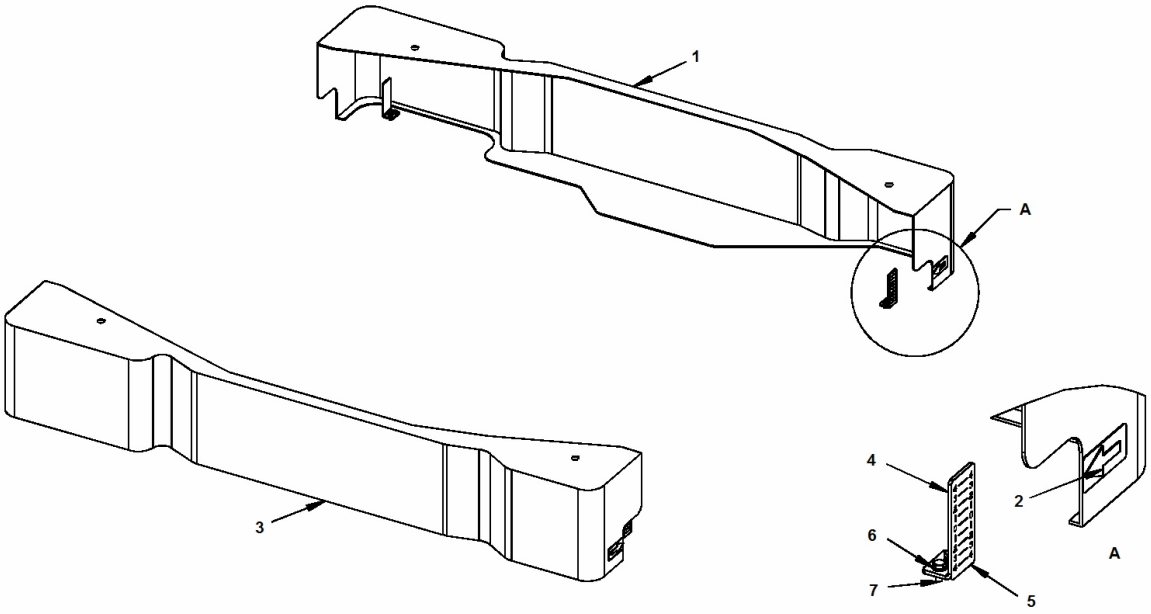

Item	Part No.	Name	Qty	L
1	4812101686	Left cover	1	
2	4812101382	Decal, arrow	4	
3	4812101687	Right cover	1	
4	4812101383	Bracket	4	
5	4812101381	Decal	4	
6	4700904228	Steel plain washer	8	
7	4700500185	Screw	8	

4812100666 Frame assembly 4812100666 Frame assembly

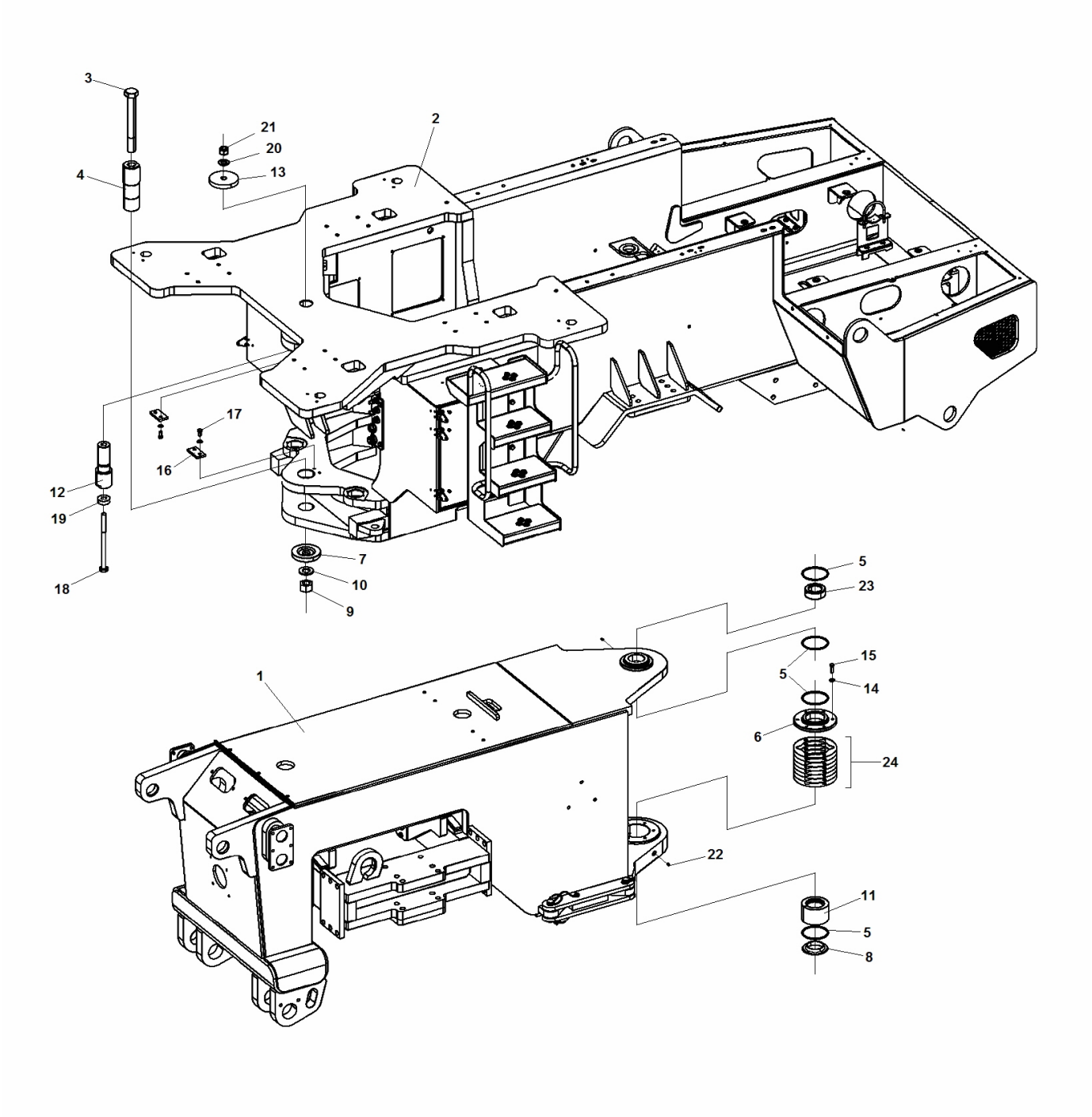

Item	Part No.	Name	Qty	L
1	4812100555	Front frame module	1	
2	4812100556	Rear Frame Module	1	
3	4700260269	Screw	1	
4	4700260268	Pin	1	
5	4700813473	O-ring	4	
6	4700260270	Cover	1	
7	4700260275	Washer	1	
8	4700260276	Spacer	1	
9	4700586113	Nut	1	
10	4700393625	Spacer washer	1	
11	4700920806	Pull Rod Attachement	1	
12	4700198811	Shaft	1	
13	4700260272	Washer	1	
14	4700904231	Steel plain washer, 13x24x2 mm 300 HV	10	
15	4700500037	Hex. screw	6	
16	4700260267	Link	2	
17	4700500051	Hex. screw	4	
18	4700266816	Screw	1	
19	4700265109	Washer	1	
20	4700904548	Washer	1	
21	4700586112	Locking nut	1	
22	4700310022	Grease nipple	2	
23	4700100040	Contact spher. Plain bearing	1	
24	4700260271	Shim	16	

4812100555 Front frame module 4812100555 Front frame module

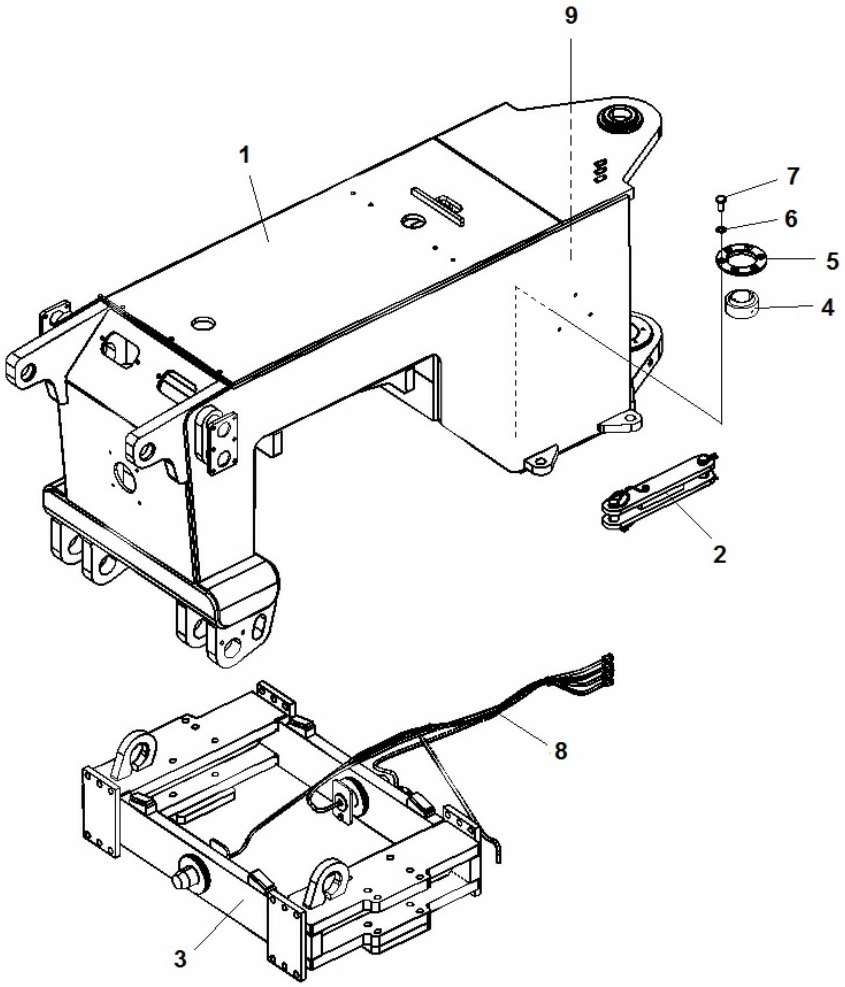

Item	Part No.	Name	Qty	L
1	4812100598	Front frame	1	
2	4812100953	Lock Module	1	
3	4812100955	Cradle Module	1	
4	4700248746	Toggle joint	2	
5	4700248745	Cover	2	
6	4700904228	Steel plain washer	12	
7	4700500185	Screw	12	
8	4812101248	Lubrication Kit	1	
9	4812101789	Measuring panel assy	1	

4812100555 Front frame module 4812101789 Measuring panel assy

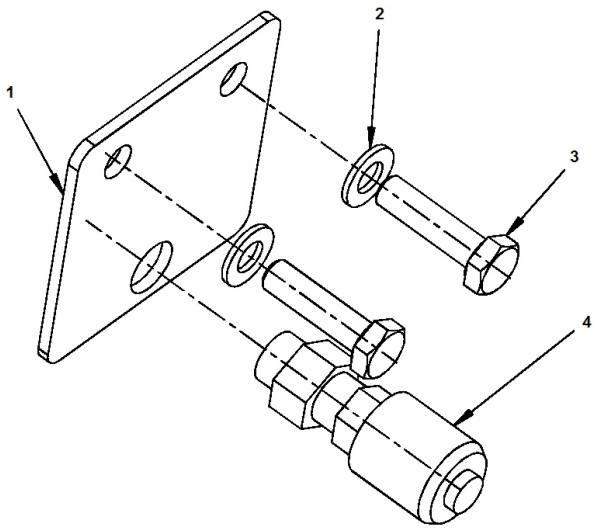

Item	Part No.	Name	Qty	L
1	4812101788	Bracket	1	
2	4700904229	Washer, 8.4x16x1.5 mm 300 HV	2	
3	4700500022	Screw	2	
4	4700346022	Measuring nipple	1	

4812100555 Front frame module 4812101248 Lubrication Kit

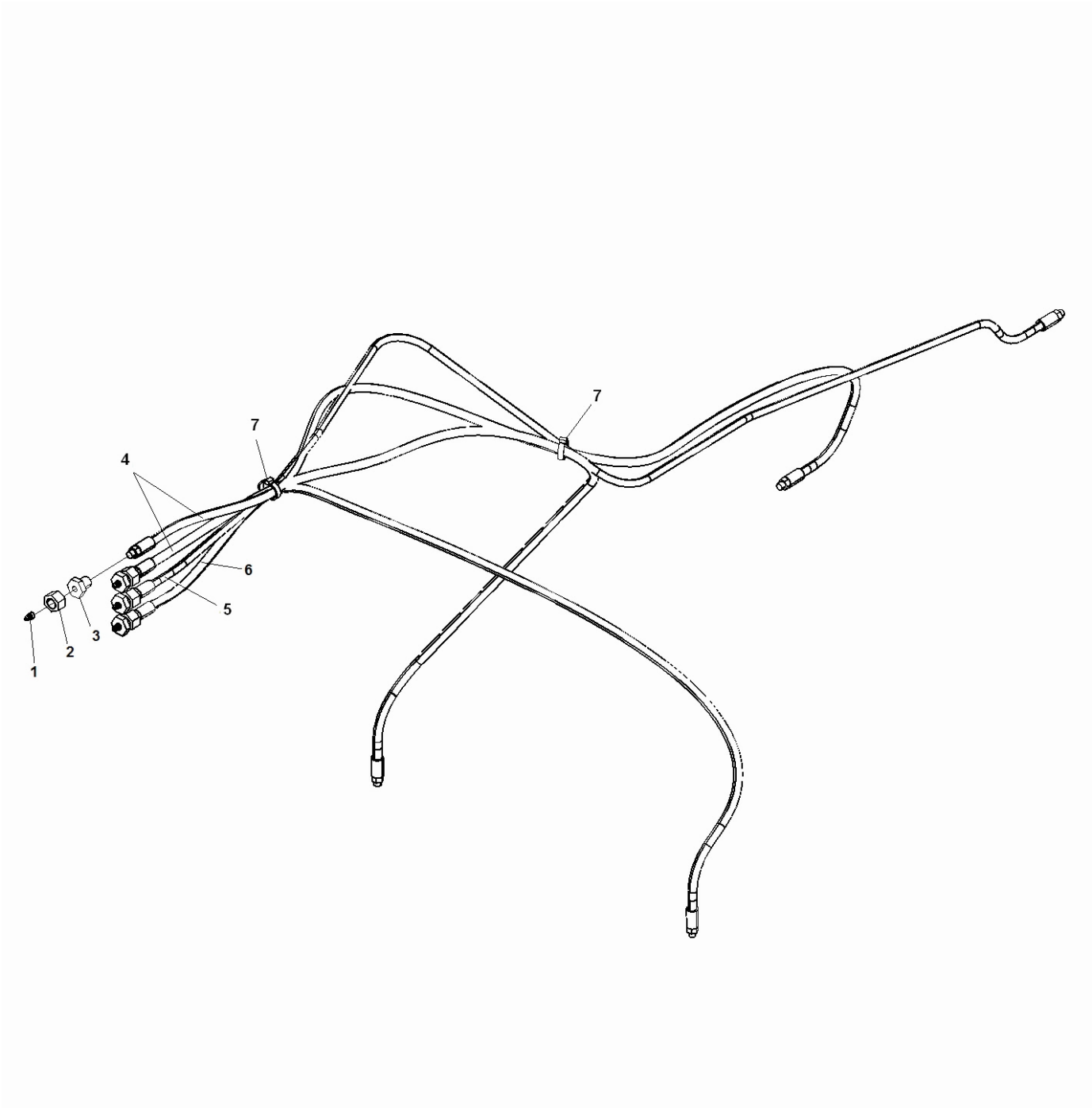

Item	Part No.	Name	Qty	L
1	4700310022	Grease nipple	4	
2	4700570008	Hex. nut	4	
3	4700268482	Niple	4	
4	4700267775	Hose	2	
5	4700267777	Hose	1	
6	4700267776	Hose	1	
7	4700313102	Cable ties	2	

4812100555 Front frame module 4812100955 Cradle Module

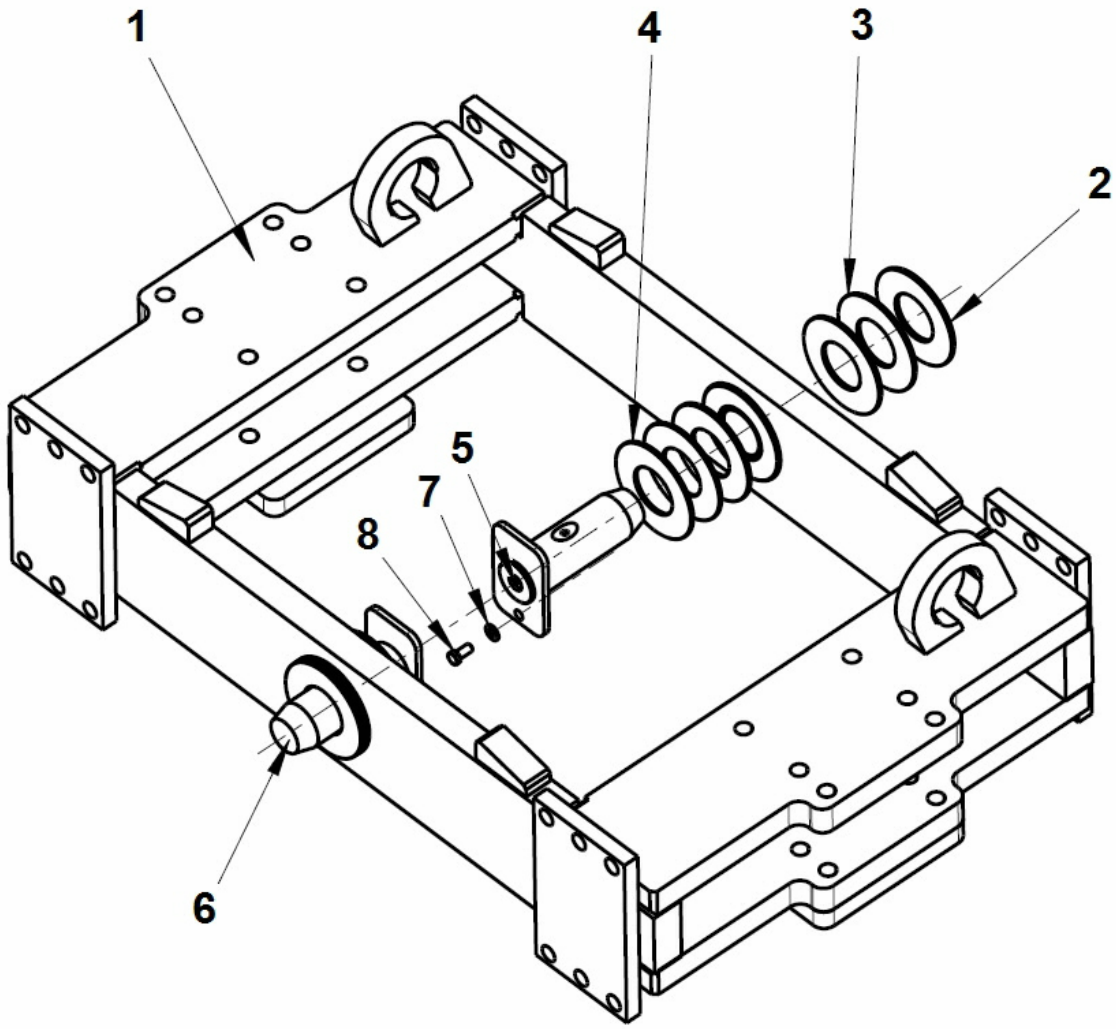

Item	Part No.	Name	Qty	L
1	4812316123	Cradle	1	
2	4700260277	Washer	4	
3	4700260278	Washer	4	
4	4700260279	Washer	4	
5	4700310022	Grease nipple	2	
6	4700260264	Pin with lock	2	
7	4700904231	Steel plain washer, 13x24x2 mm 300 HV	2	
8	4700500051	Hex. screw	2	

4812100555 Front frame module 4812100953 Lock Module

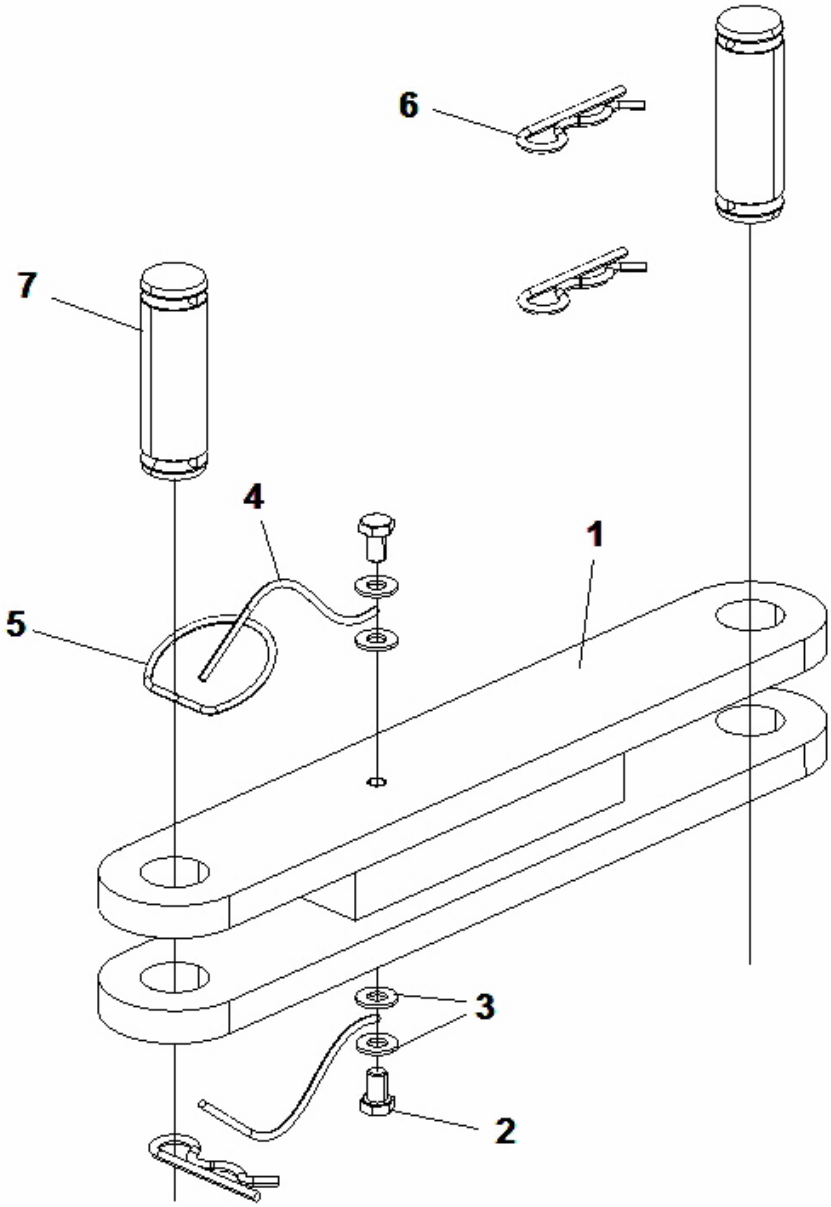

Item	Part No.	Name	Qty	L
1	4700199595	Safety rod	1	
2	4700500043	Hex. screw	2	
3	4700904230	Washer	4	
4	4700343775	Wire	2	
5	4700357488	Spring	1	
6	4700635057	Hair pin	3	
7	4700370771	Shaft	2	

4812100556 Rear Frame Module 4812100556 Rear Frame Module

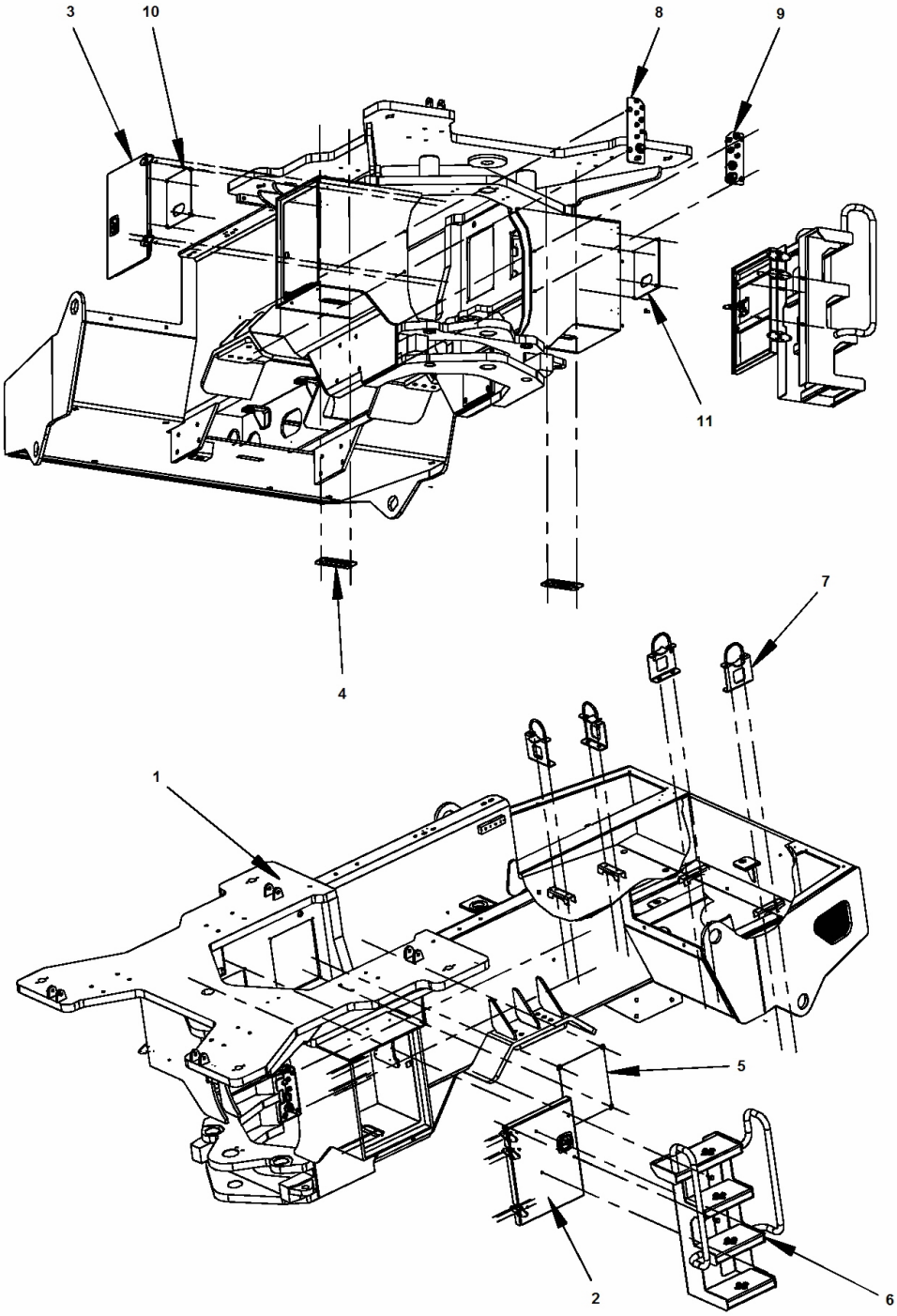

Item	Part No.	Name	Qty	L
1	4812100530	Rear frame	1	
2	4812100956	Frame Cover Module Left	1	
3	4812100958	Frame Cover Module Right	1	
4	4812100961	Battery Box Drain Module	2	
5	4812100963	Frame Transm Cover Module	2	
6	4812101059	Ladder Module	1	
7	4812100965	Exhaust Bracket Module	4	
8	4812100967	Bulkheads right	1	
9	4812100969	Bulkheads Left	1	
10	4812101804	Electrical box cover module	1	
11	4812101804	Electrical box cover module	1	

4812100556 Rear Frame Module 4812100969 Bulkheads Left

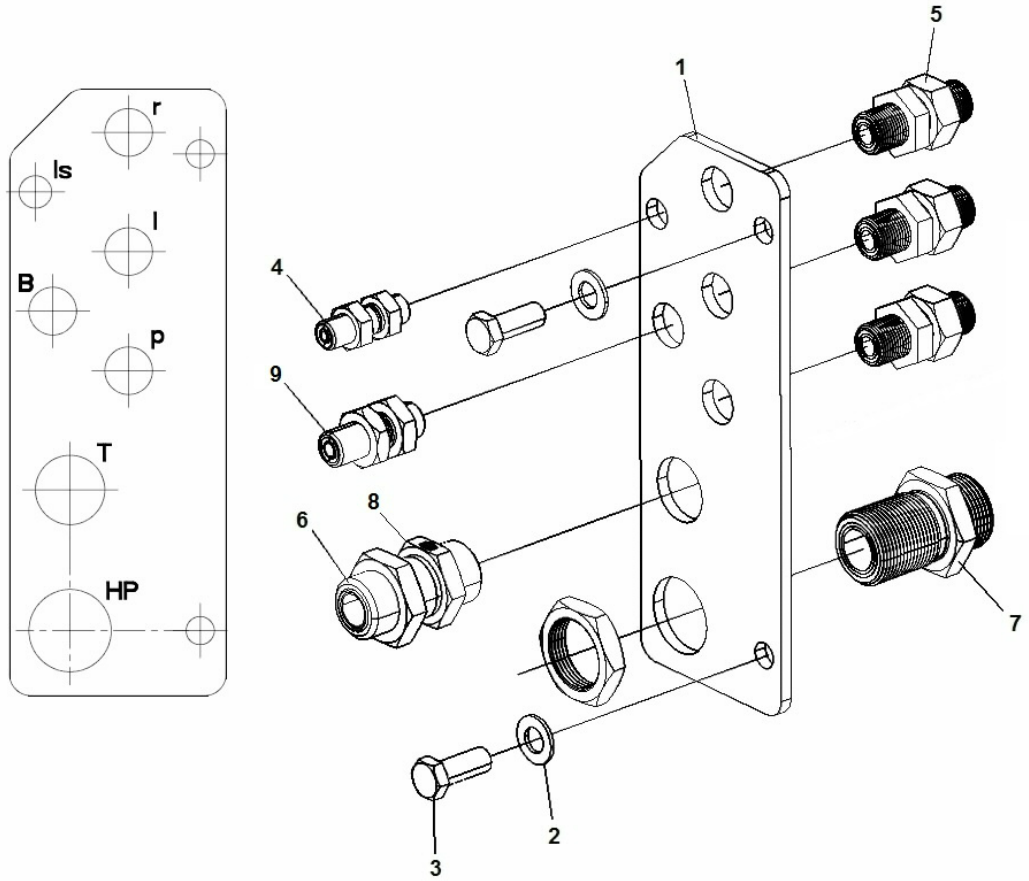

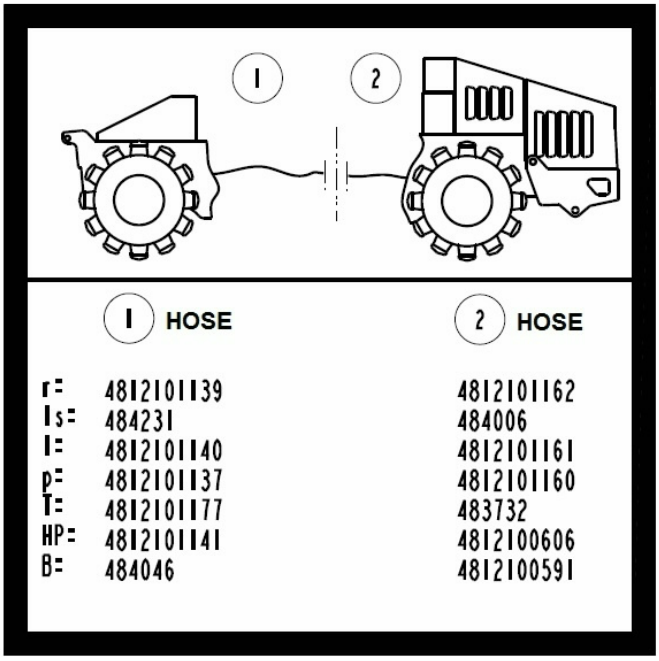

Item	Part No.	Name	Qty	L
1	4812101110	Bulkhead left	1	
2	4700904231	Steel plain washer, 13x24x2 mm 300 HV	2	
3	4700500046	Hex. head screw M12x030H	2	
4	4700792170	Adapter	1	
5	4700792344	Bulkhead union	3	
6	4700904581	Bulkhead union	1	
7	4812112559	Bulkhead union	1	
8	4700904580	Adapter	1	
9	4700791830	Adapter	1	

4812100556 Rear Frame Module 4812100967 Bulkheads right

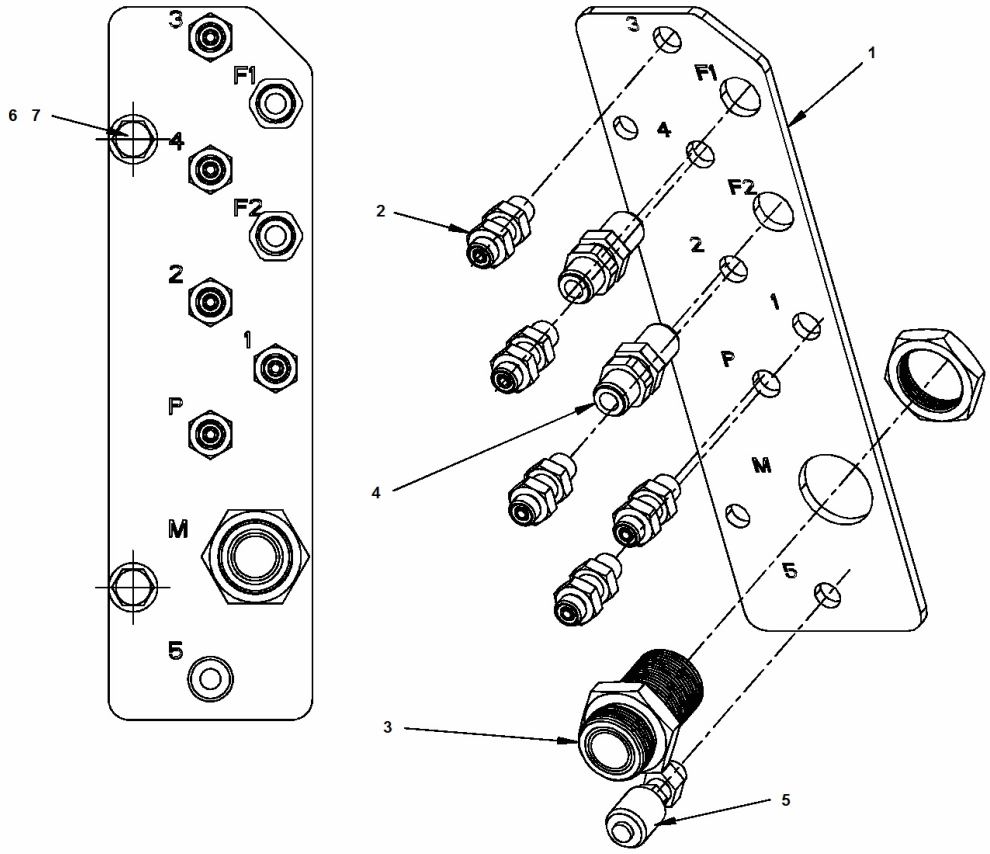

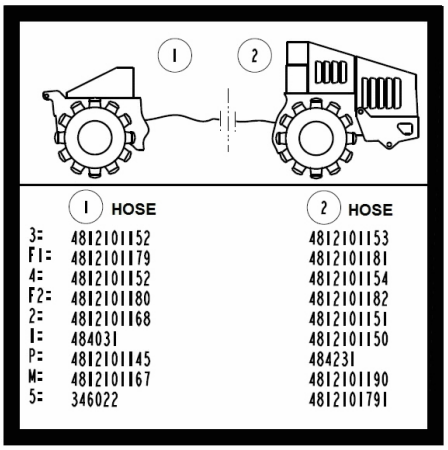

	1 HOSE	2 HOSE
3=	4812101152	4812101153
F1=	4812101179	4812101181
4=	4812101152	4812101154
F2=	4812101180	4812101182
2=	4812101168	4812101151
1=	484031	4812101150
P=	4812101145	484231
M=	4812101167	4812101190
5=	346022	4812101791

Item	Part No.	Name	Qty	L
1	4812101111	Bulkhead Right	1	
2	4700792170	Adapter	5	
3	4812112559	Bulkhead union	1	
4	4700230515	Connector	2	
5	4700346022	Measuring nipple	1	
6	4700904231	Steel plain washer, 13x24x2 mm 300 HV	2	
7	4700500046	Hex. head screw M12x030H	2	

4812100556 Rear Frame Module 4812100965 Exhaust Bracket Module

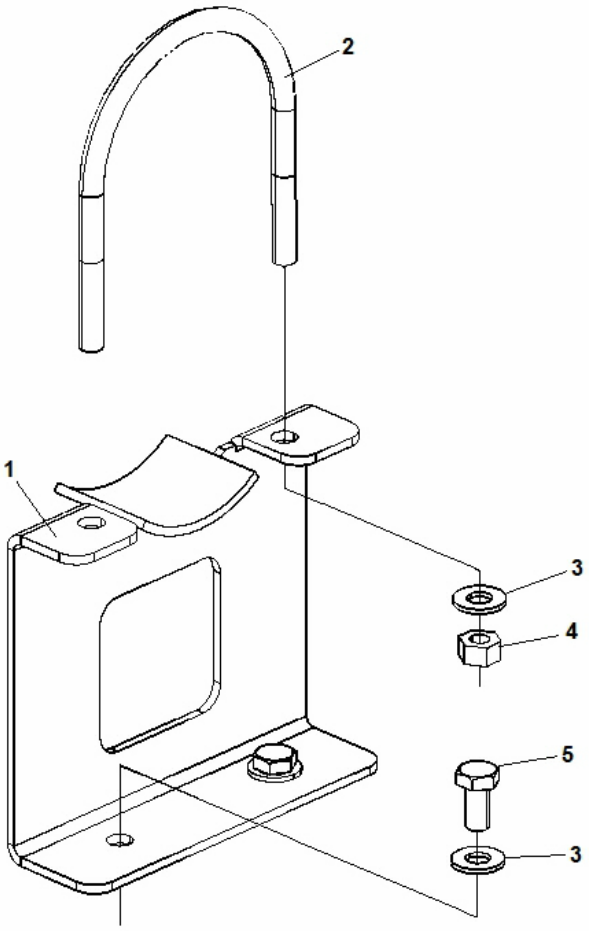

Item	Part No.	Name	Qty	L
1	4812101107	DPF Bracket	1	
2	4812101112	Clamp	1	
3	4700904557	Washer, 10.5x22x4 mm 300 HV	4	
4	4700570006	Hex. nut	2	
5	4700500028	Screw, M10x25 mm 8.8 A3K	2	

4812100556 Rear Frame Module 4812101059 Ladder Module

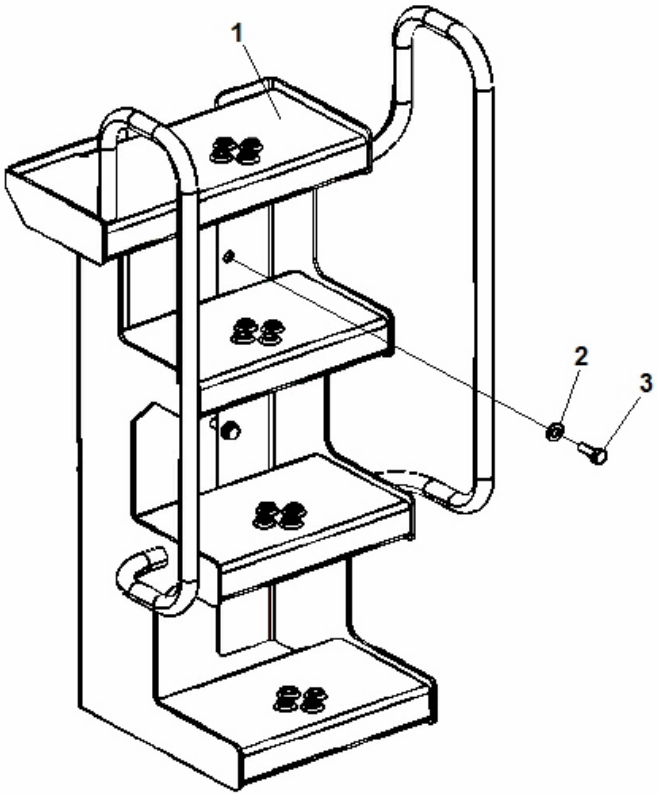

Item	Part No.	Name	Qty	L
1	4812100558	Ladder	1	
2	4700904231	Steel plain washer, 13x24x2 mm 300 HV	4	
3	4700500037	Hex. screw	4	

4812100556 Rear Frame Module 4812100963 Frame Transm Cover Module

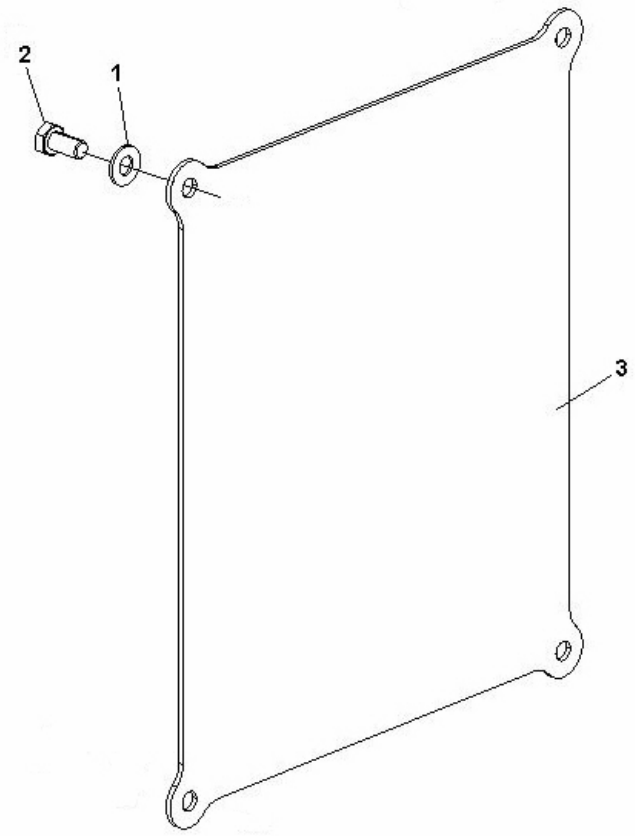

Item	Part No.	Name	Qty	L
1	4700904230	Washer	4	
2	4700500048	Screw	4	
3	4812316082	Cover	1	

4812100556 Rear Frame Module 4812100961 Battery Box Drain Module

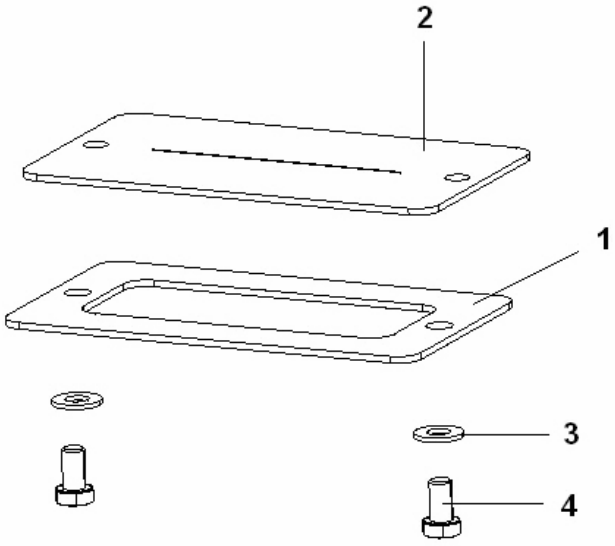

Item	Part No.	Name	Qty	L
1	4812100618	Cover	1	
2	4812100619	Protection	1	
3	4700904230	Washer	2	
4	4700900486	Screw	2	

4812100556 Rear Frame Module 4812100958 Frame Cover Module Right

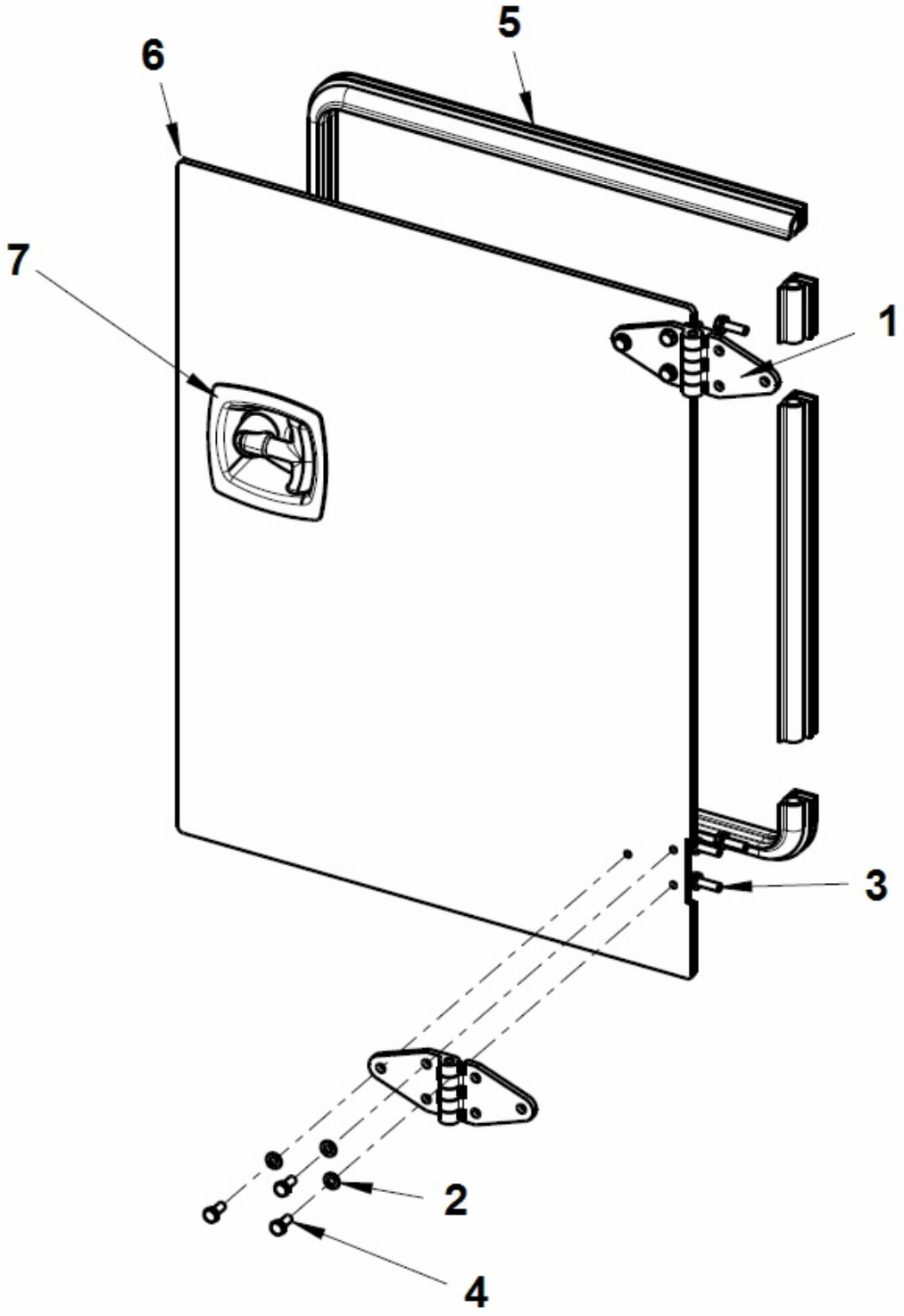

Item	Part No.	Name	Qty	L
1	4812100982	Hinge	2	
2	4700904228	Steel plain washer	12	
3	4700500040	Screw	6	
4	4700500185	Screw	6	
5	4700903953	Edge trim	1XL	
6	4812100654	Cover	1	
7	4700198096	Catch	1	
.7	4812100794	Key	1	

4812100556 Rear Frame Module 4812100956 Frame Cover Module Left

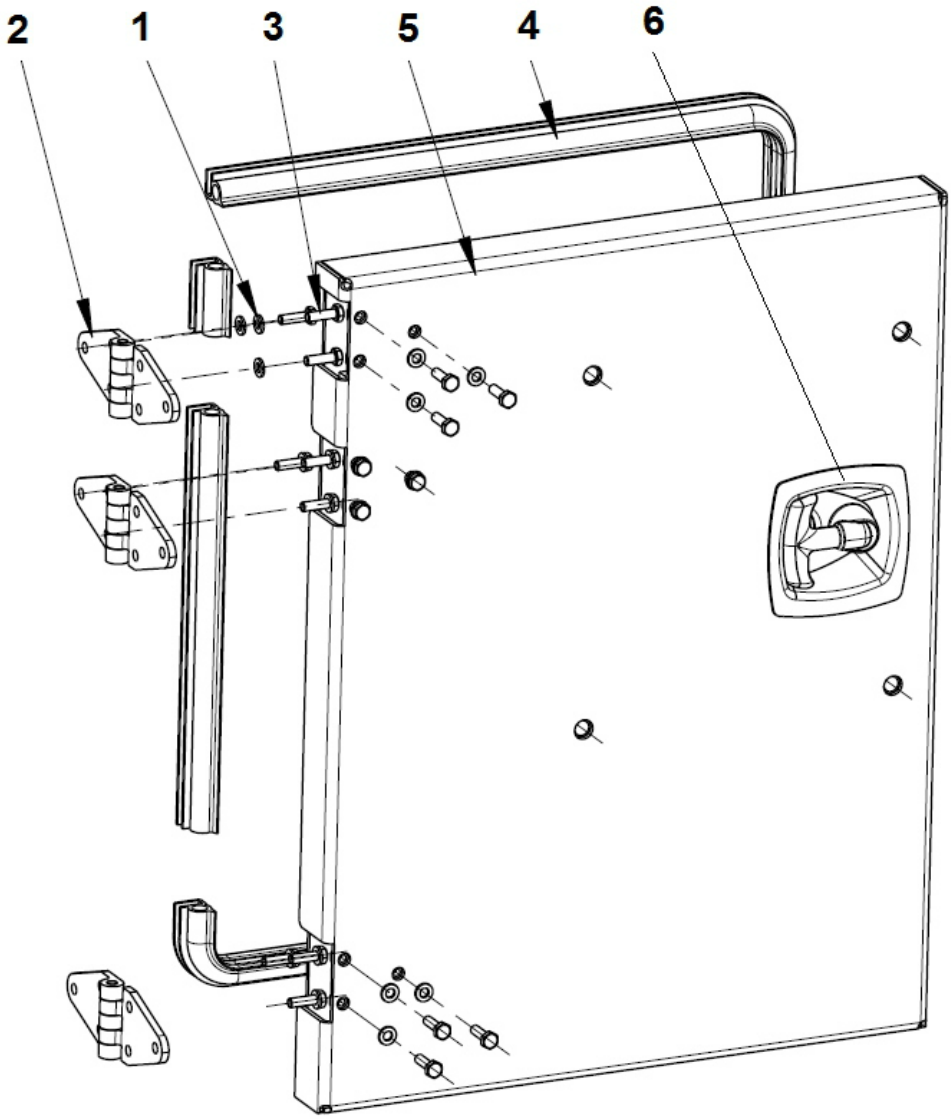

Item	Part No.	Name	Qty	L
1	4700904228	Steel plain washer	18	
2	4812100982	Hinge	3	
3	4700500040	Screw	18	
4	4700903953	Edge trim	1XL	
5	4812100696	Cover	1	
6	4700198096	Catch	1	
.6	4812100794	Key	1	

4812100678 Features assembly 4812100678 Features assembly

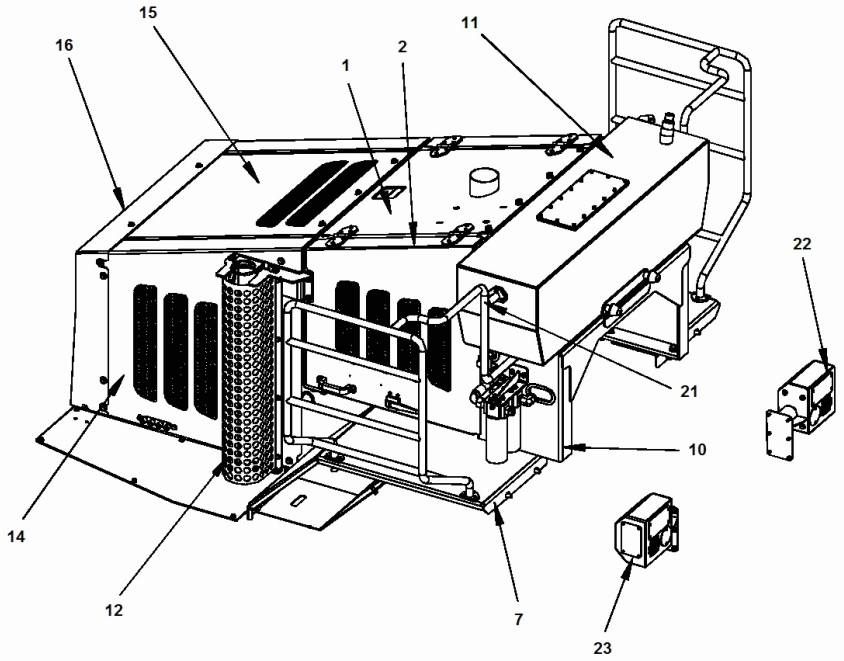

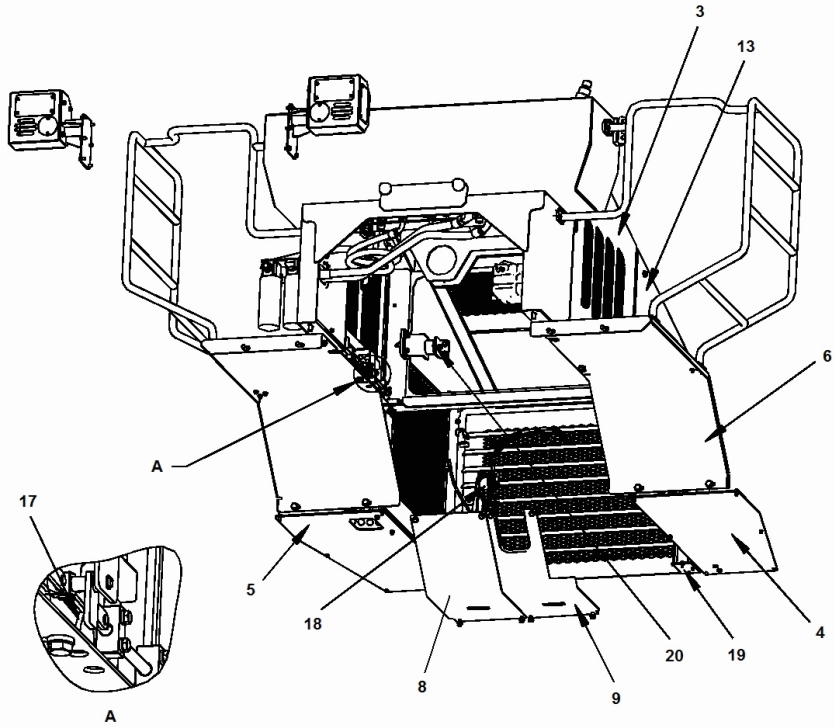

Item	Part No.	Name	Qty	L
1	4812101023	Engine Cover Module	1	
2	4812100561	Engine Cover Module Right	1	
3	4812100562	Engine Cover Module Left	1	
4	4812101026	Cover Module Left	1	
5	4812101027	Cover Module Right	1	
6	4812101028	Mudguard Module Left	1	
7	4812101029	Mudguard Module Right	1	
8	4812101032	Cover Module Right	1	
9	4812101031	Cover Module Left	1	
10	4812101030	Support Tank Module	1	
11	4812101040	Hydraulic tank module	1	
12	4812101037	Exhaust Guard Module	1	
13	4812101039	Rear Cover Module Left	1	
14	4812101042	Rear Cover Module Right	1	
15	4812101043	Rear Cover Module Top	1	
16	4812101044	Rear Grid Cover Module	1	
17	4812101655	Lock assy	2	
18	4812101650	Shock absorber assy	2	
19		Bracket module	2	
20	4812101646	Shock absorver module	2	
21	4812101407	Handrail module	1	
22	4812101201	Front drive lights module	1	
23	4812101204	Front drive lights right module	1	

4812100678 Features assembly 4812101026 Cover Module Left

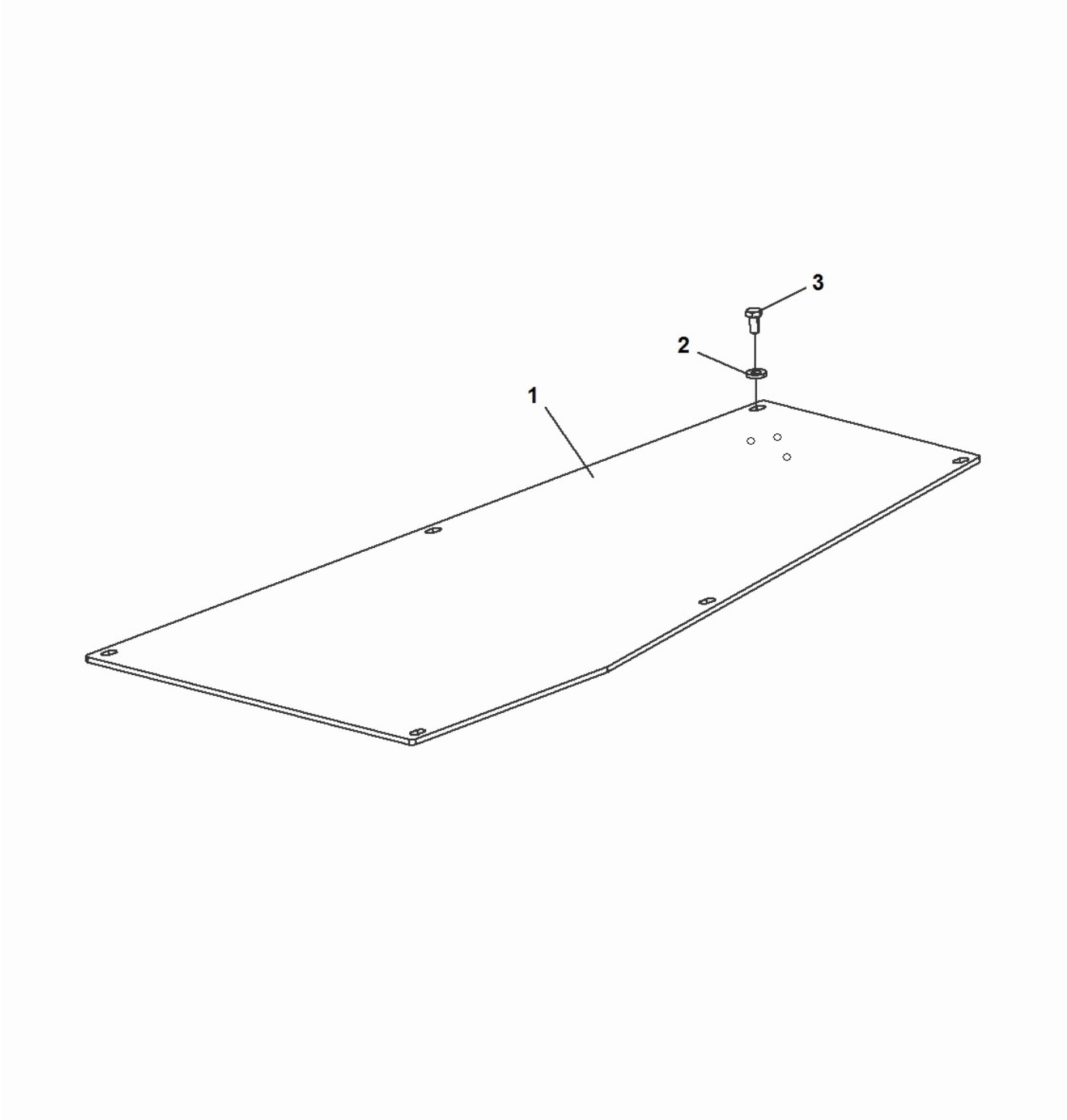

Item	Part No.	Name	Qty	L
1	4812100519	Cover	1	
2	4700904557	Washer, 10.5x22x4 mm 300 HV	6	
3	4700500048	Screw	6	

4812100678 Features assembly 4812101027 Cover Module Right

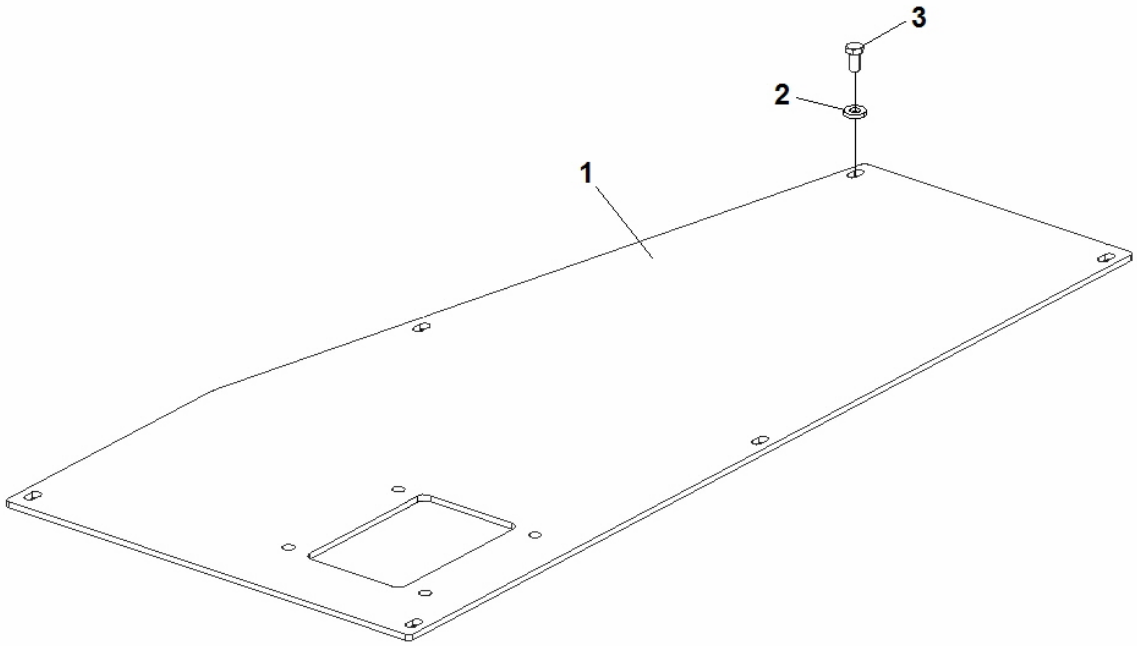

Item	Part No.	Name	Qty	L
1	4812100691	Cover	1	
2	4700904557	Washer, 10.5x22x4 mm 300 HV	6	
3	4700500048	Screw	6	

4812100678 Features assembly 4812101031 Cover Module Left

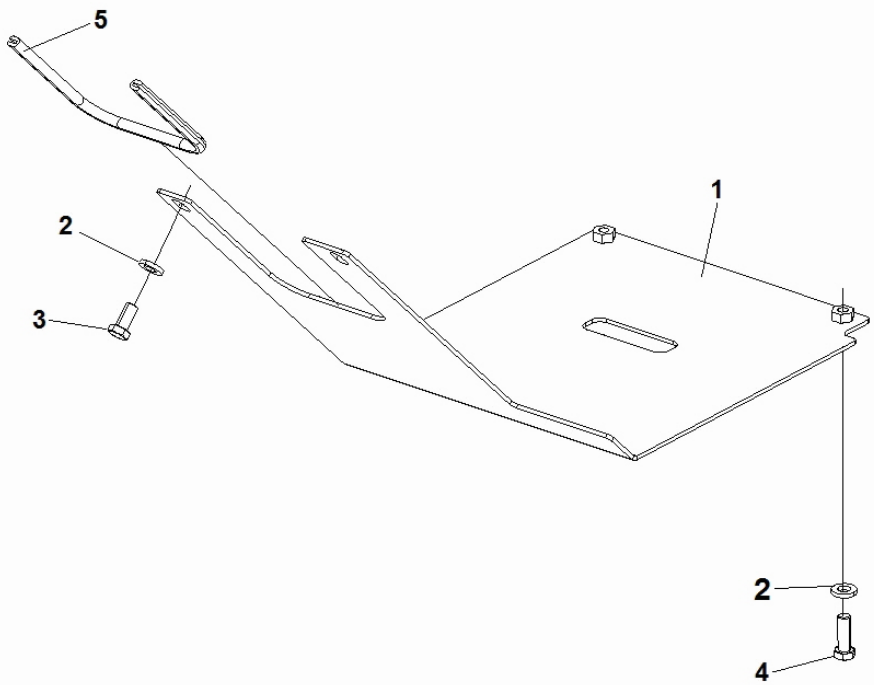

Item	Part No.	Name	Qty	L
1	4812100623	Cover	1	
2	4700904703	Plain washer 13x24x4 mm	4	
3	4700500051	Hex. screw	2	
4	4700500037	Hex. screw	2	
5	4700246947	Edge trim	1XL	A

Comments for Page: 4812101031 Cover Module Left

(L)OCAL REMARKS

A | en_US | L = 1m

4812100678 Features assembly 4812101032 Cover Module Right

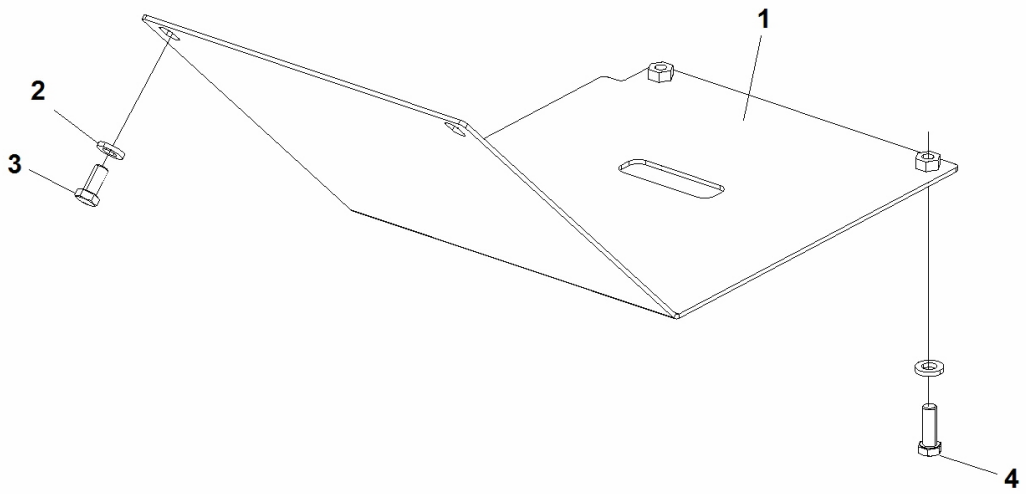

Item	Part No.	Name	Qty	L
1	4812100622	Cover	1	
2	4700904703	Plain washer 13x24x4 mm	4	
3	4700500051	Hex. screw	2	
4	4700500037	Hex. screw	2	

4812100678 Features assembly 4812101029 Mudguard Module Right

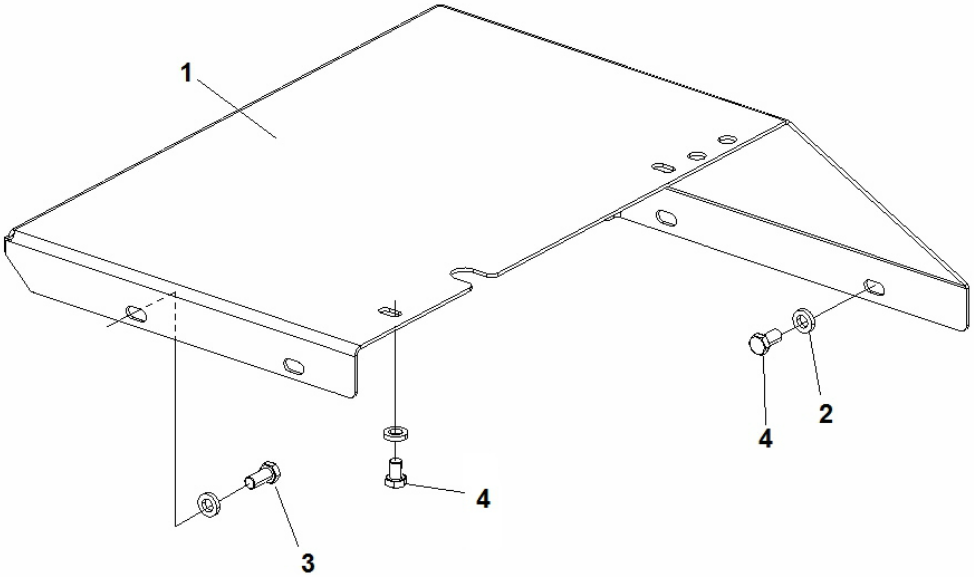

Item	Part No.	Name	Qty	L
1	4812100540	Mudguard right	1	
2	4700904558	Washer, 17x30x6 mm 300 HV	6	
3	4700500123	Hex. screw	2	
4	4700500119	Screw	4	

4812100678 Features assembly 4812101028 Mudguard Module Left

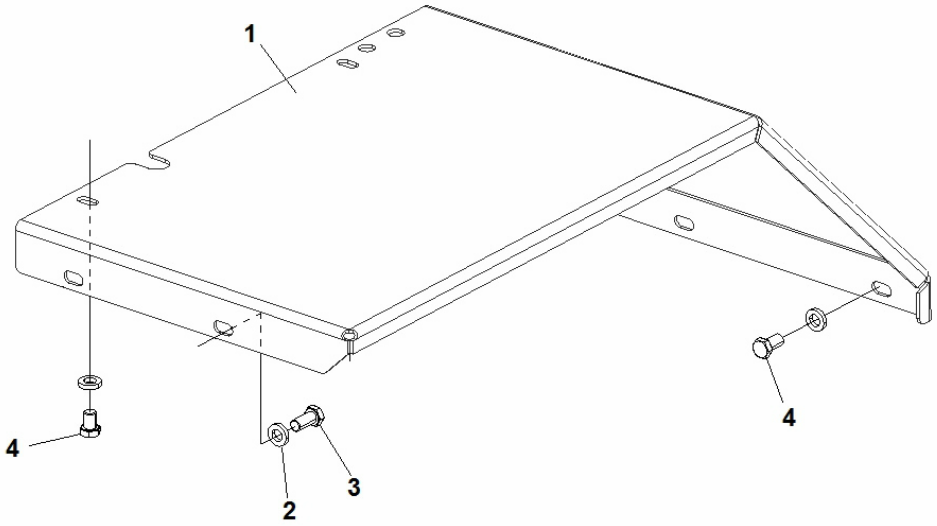

Item	Part No.	Name	Qty	L
1	4812100539	Mudguard Module Left	1	
2	4700904558	Washer, 17x30x6 mm 300 HV	6	
3	4700500123	Hex. screw	2	
4	4700500119	Screw	4	

4812100678 Features assembly 4812101040 Hydraulic tank module

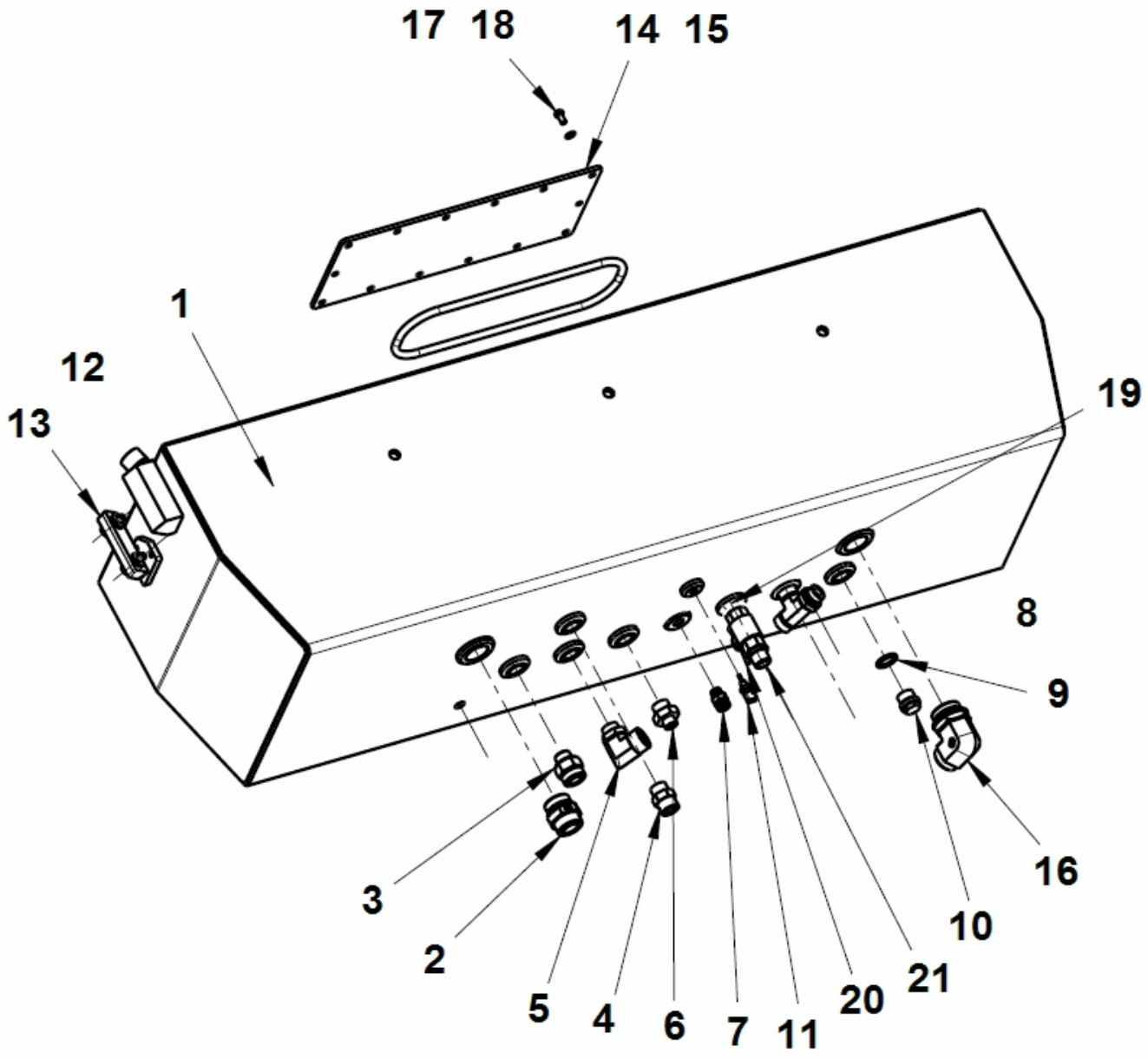

Item	Part No.	Name	Qty	L
1	4812100578	Hydraulic oil tank	1	
2	4812100743	Straight connector	1	
3	4700791631	Connector, G3⁄4 in. x 7⁄16 in. UNF	1	
4	4700904728	Adapter	1	
5	4700791400	Elbow, G3⁄4 in. x 7⁄16 in. UNF	1	
6	4700791408	Straight o-ring connector	1	
7	4700904727	Adapter	1	
8	4700791793	T-connenction	1	
9	4700791120	Washer sealing	1	
10	4700232039	Steel plug threaded	1	
11	4700199677	Temperature sensor	1	
12	4700357138	Ventilating filter	1	
13	4700989151	Oil level glass	1	
14	4812316084	Cover	1	
15	4700349880	O Ring	1	
16	4812101095	Elbow	1	
17	4700904229	Washer, 8.4x16x1.5 mm 300 HV	14	
18	4700500019	Hex. screw	14	
19	4700334156	Adapter	1	
20	4700233304	Ball valve	1	
21	4700791119	Adapter G3/4	1	

4812100678 Features assembly 4812101204 Front drive lights right module

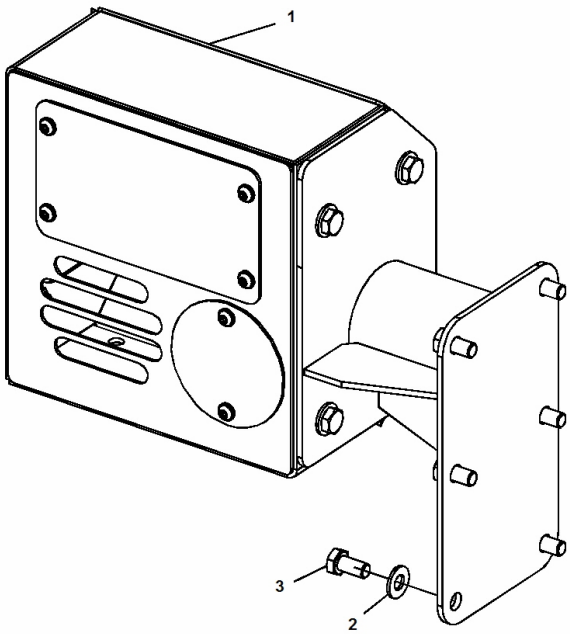

Item	Part No.	Name	Qty	L
1	4812101205	Front drive lights assy	1	
2	4700904230	Washer	6	
3	4700500048	Screw	6	

4812100678 Features assembly 4812101201 Front drive lights module

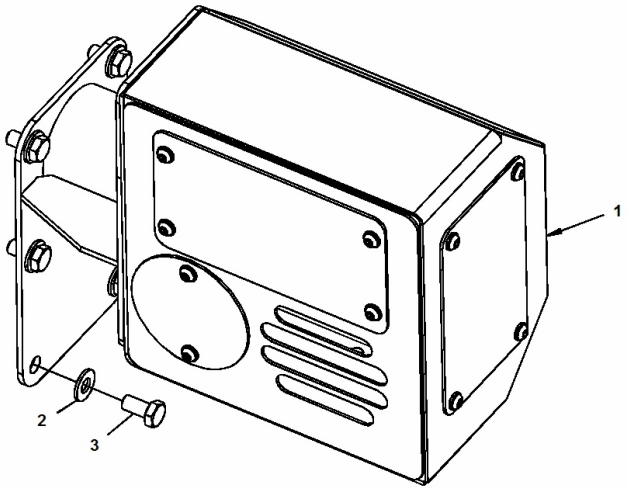

Item	Part No.	Name	Qty	L
1	4812101202	Front drive lights assy	1	
2	4700904230	Washer	6	
3	4700500048	Screw	6	

4812100678 Features assembly 4812101407 Handrail module

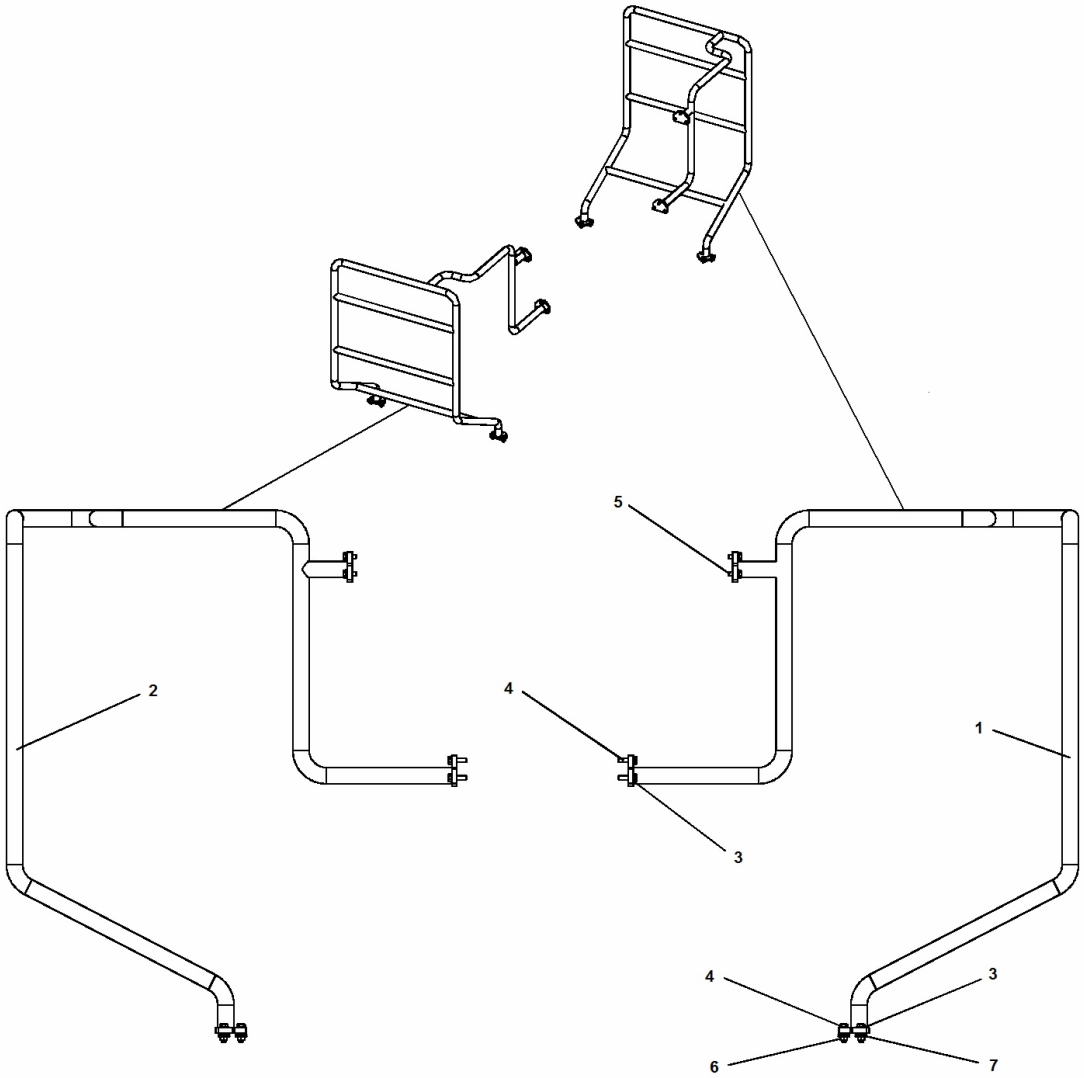

Item	Part No.	Name	Qty	L
1	4812101408	Handrail Right	1	
2	4812101409	Handrail Left	1	
3	4700904229	Washer, 8.4x16x1.5 mm 300 HV	24	
4	4700500022	Screw	18	
5	4700500053	Hex. screw	6	
6	4700570005	Hex. nut	12	
7	4700904640	Washer, 8.4x 2x3 mm 300 HV	12	

4812100678 Features assembly 4812101646 Shock absorver module

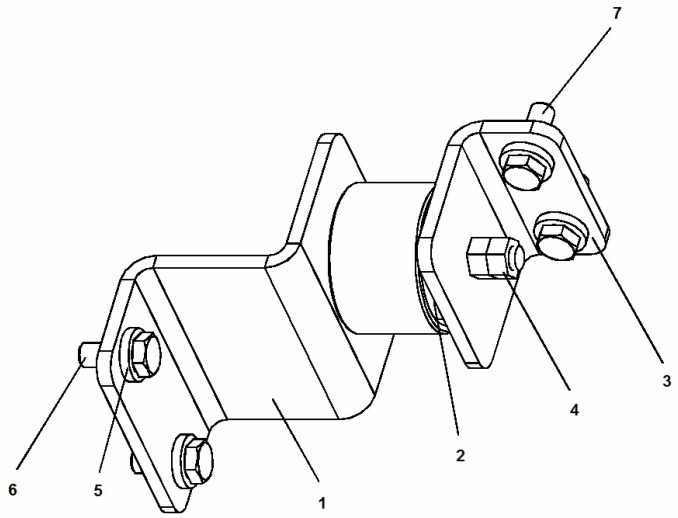

Item	Part No.	Name	Qty	L
1	4812101649	Bracket	1	
2	4700904551	Shock absorber	1	
3	4812101648	Bracket	1	
4	4700570006	Hex. nut	2	
5	4700904557	Washer, 10.5x22x4 mm 300 HV	4	
6	4700500028	Screw, M10x25 mm 8.8 A3K	2	
7	4700500029	Hex. screw	2	

4812100678 Features assembly 4812101653 Bracket module

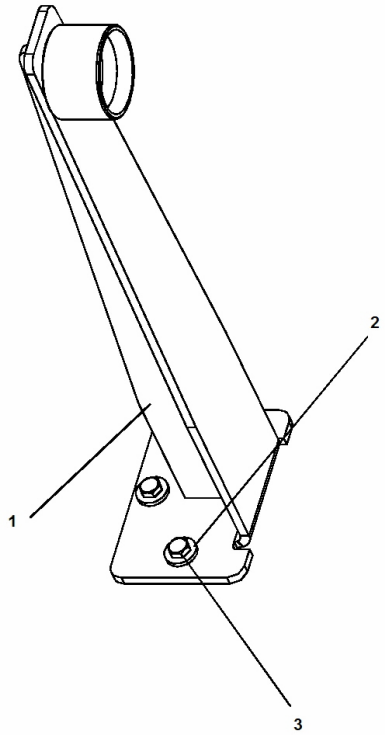

Item	Part No.	Name	Qty	L
1	4812101654	Bracket	1	
2	4700904640	Washer, 8.4x 2x3 mm 300 HV	3	
3	4700500053	Hex. screw	3	

4812100678 Features assembly 4812101650 Shock absorber assy

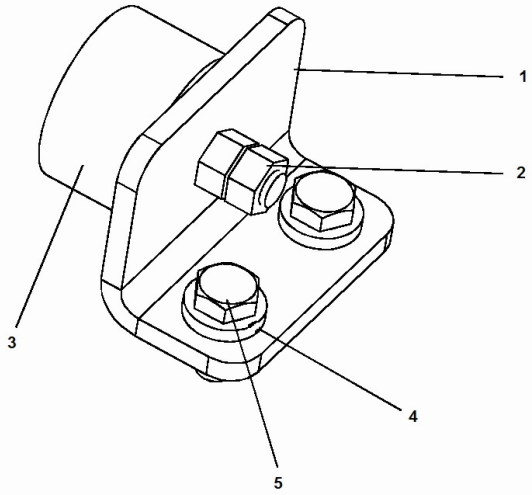

Item	Part No.	Name	Qty	L
1	4812101652	Bracket	1	
2	4700570006	Hex. nut	2	
3	4700904551	Shock absorber	1	
4	4700904557	Washer, 10.5x22x4 mm 300 HV	2	
5	4700500028	Screw, M10x25 mm 8.8 A3K	2	

4812100678 Features assembly 4812101655 Lock assy

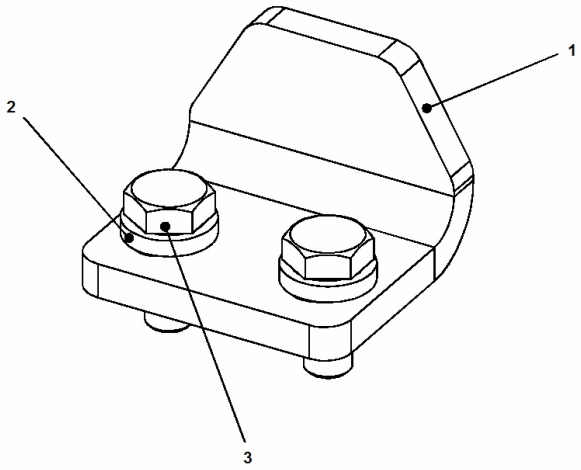

Item	Part No.	Name	Qty	L
1	4812101118	Lock	1	
2	4700904556	Steel plain washer	2	
3	4700500053	Hex. screw	2	

4812100678 Features assembly 4812101044 Rear Grid Cover Module

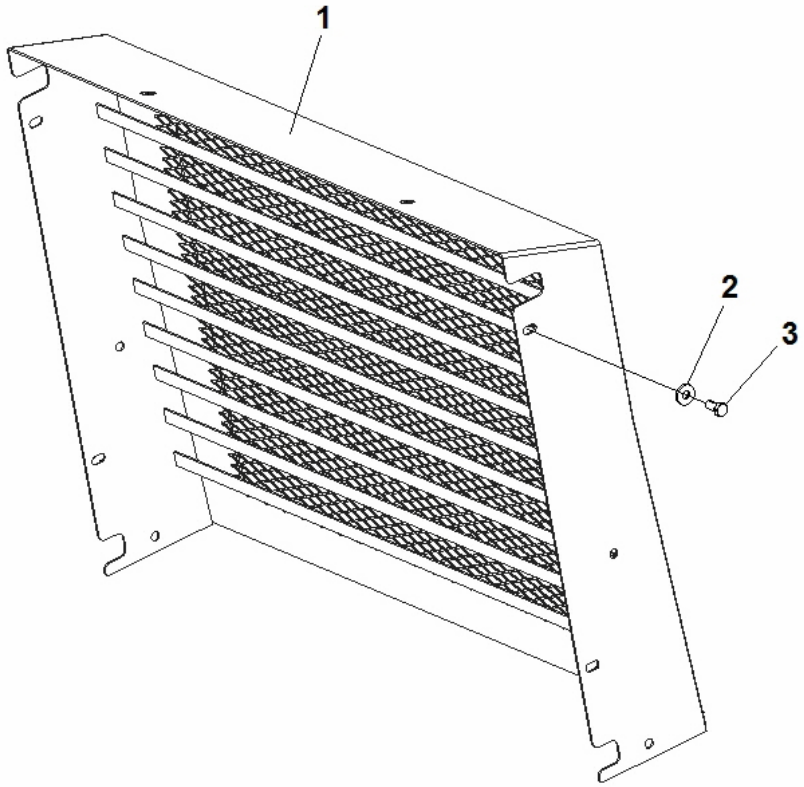

Item	Part No.	Name	Qty	L
1	4812100713	Rear cover	1	
2	4700904213	Washer	6	
3	4700500051	Hex. screw	6	

4812100678 Features assembly 4812101043 Rear Cover Module Top

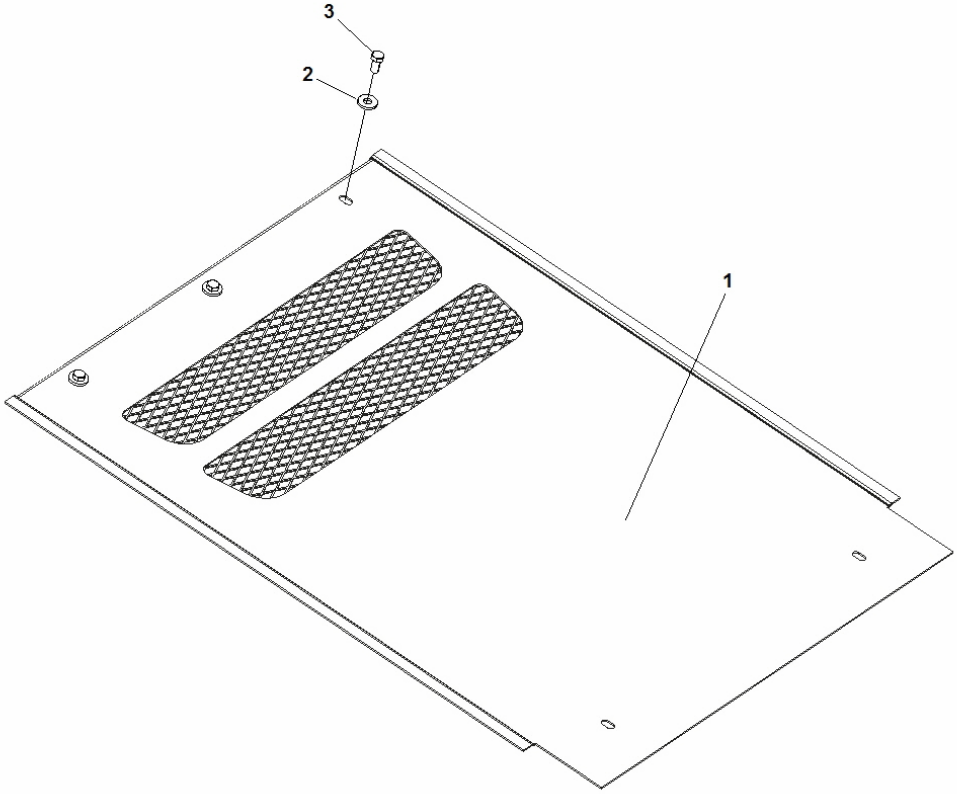

Item	Part No.	Name	Qty	L
1	4812100660	Rear Cover, Middle	1	
2	4700904213	Washer	3	
3	4700500051	Hex. screw	3	

4812100678 Features assembly 4812101042 Rear Cover Module Right

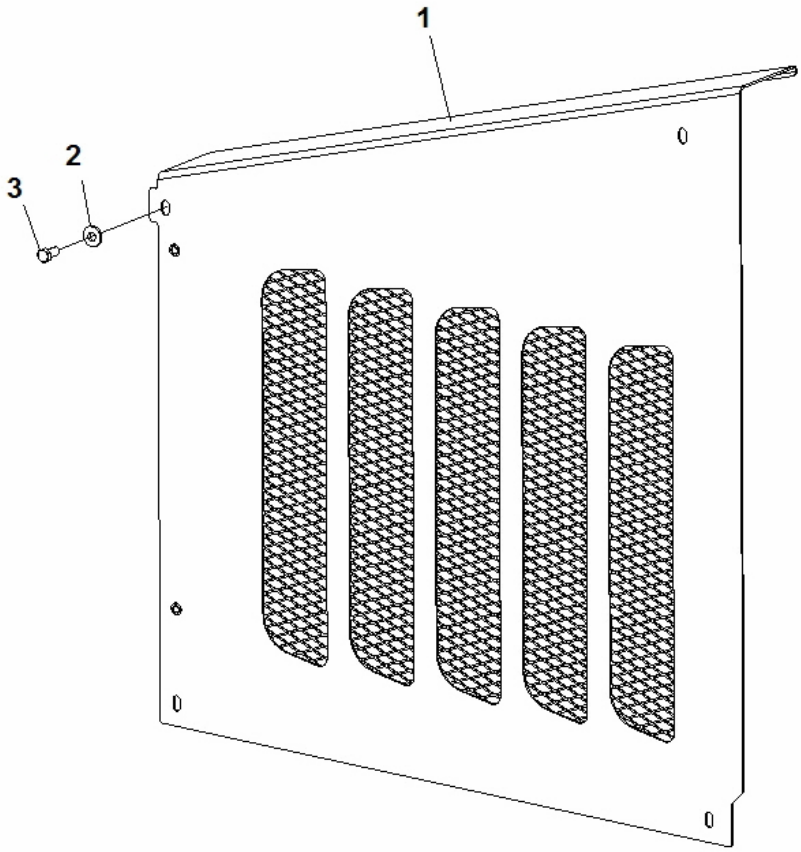

Item	Part No.	Name	Qty	L
1	4812100661	Rear cover, right	1	
2	4700904213	Washer	4	
3	4700500051	Hex. screw	4	

4812100678 Features assembly 4812101039 Rear Cover Module Left

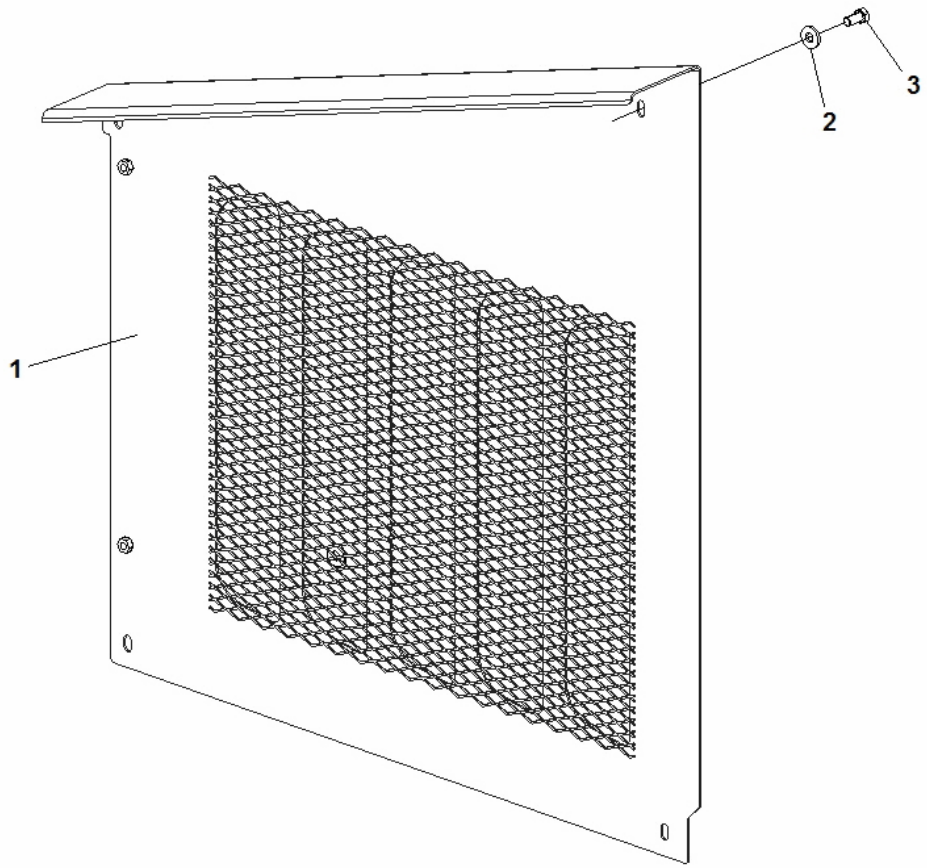

Item	Part No.	Name	Qty	L
1	4812100662	Rear cover, left	1	
2	4700904213	Washer	4	
3	4700500051	Hex. screw	4	

4812100678 Features assembly 4812101037 Exhaust Guard Module

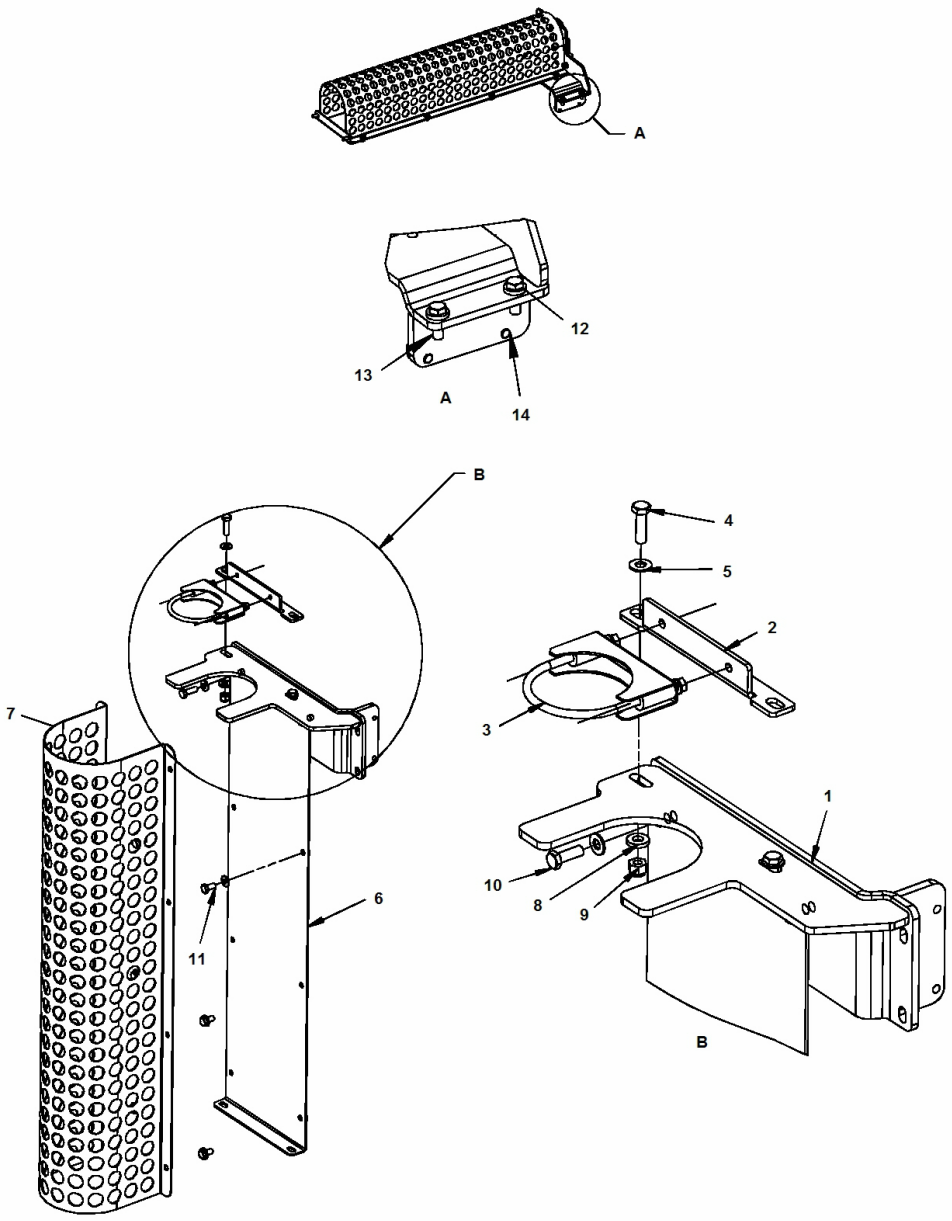

Item	Part No.	Name	Qty	L
1	4812101072	Bracket	1	
2	4812101115	Support	1	
3	4700266938	Clamp	1	
4	4700500030	Hexagon head screw	2	
5	4700904230	Washer	10	
6	4812101684	Bracket	1	
7	4812101685	Exhaust tube guard	1	
8	4700904557	Washer, 10.5x22x4 mm 300 HV	2	
9	4700586018	Lock nut	2	
10	4700500028	Screw, M10x25 mm 8.8 A3K	2	
11	4700500048	Screw	6	
12	4700904557	Washer, 10.5x22x4 mm 300 HV	6	
13	4700500029	Hex. screw	4	
14	4700500027	Screw M10-1,55x22 8.8	2	

4812101023 Engine Cover Module 4812101023 Engine Cover Module

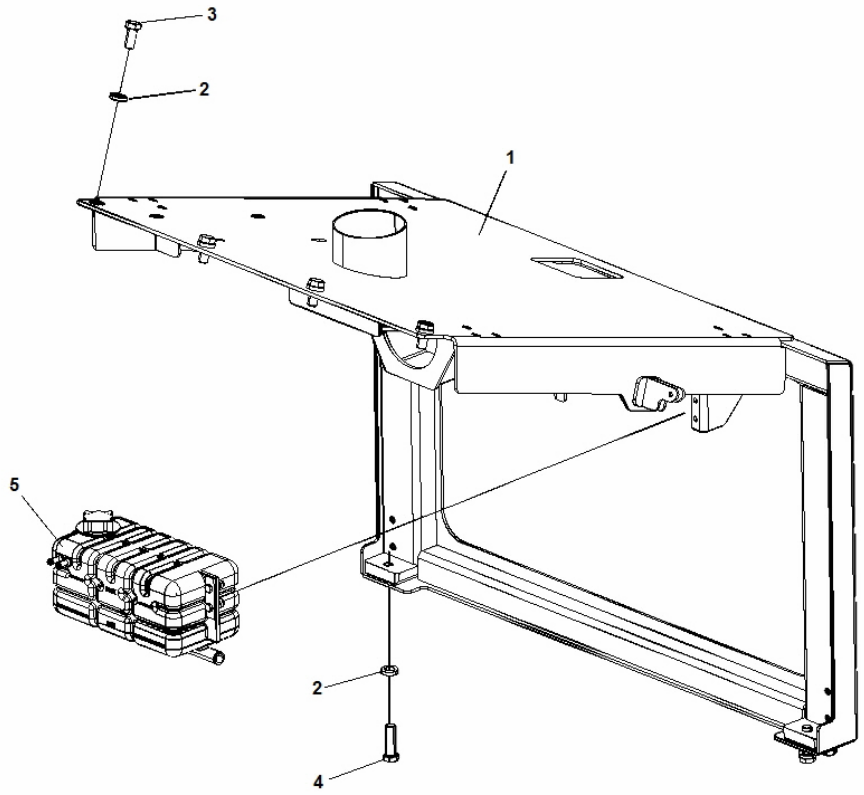

Item	Part No.	Name	Qty	L
1	4812100510	Engine hood	1	
2	4700904558	Washer, 17x30x6 mm 300 HV	8	
3	4700500123	Hex. screw	4	
4	4700500076	Screw M16x55	4	
5	4812101025	Expansion tank module	1	

4812101023 Engine Cover Module 4812101025 Expansion tank module

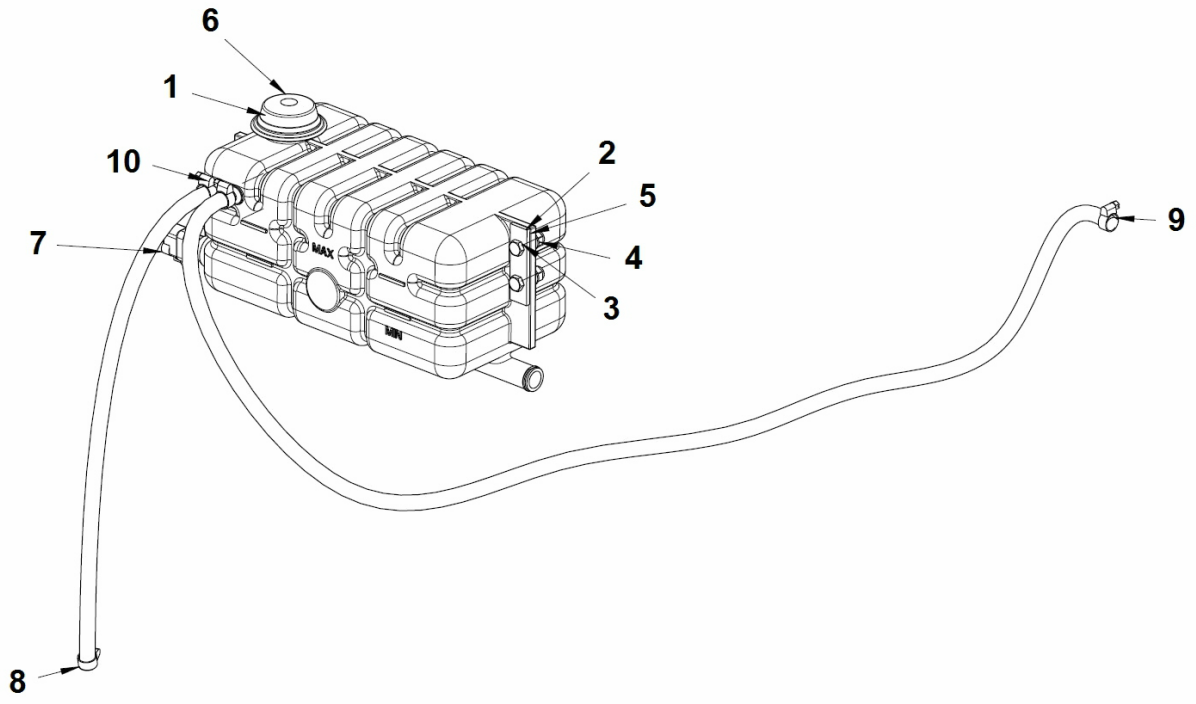

Item	Part No.	Name	Qty	L
1	4812113823	Expansion tank	1	
2	4700381413	Washer	2	
3	4700500022	Screw	4	
4	4700904229	Washer, 8.4x16x1.5 mm 300 HV	4	
5	4700586003	Hexagon lock nut M8	4	
6	4700903714	Cooler cap	1	
7	4812114098	Level sensor	1	
8	4700246069	Rubber hose	1XL	
9	4700246069	Rubber hose	1XL	
10	4700313002	Hose clamp	4	

4812100561 Engine Cover Module Right 4812100561 Engine Cover Module Right

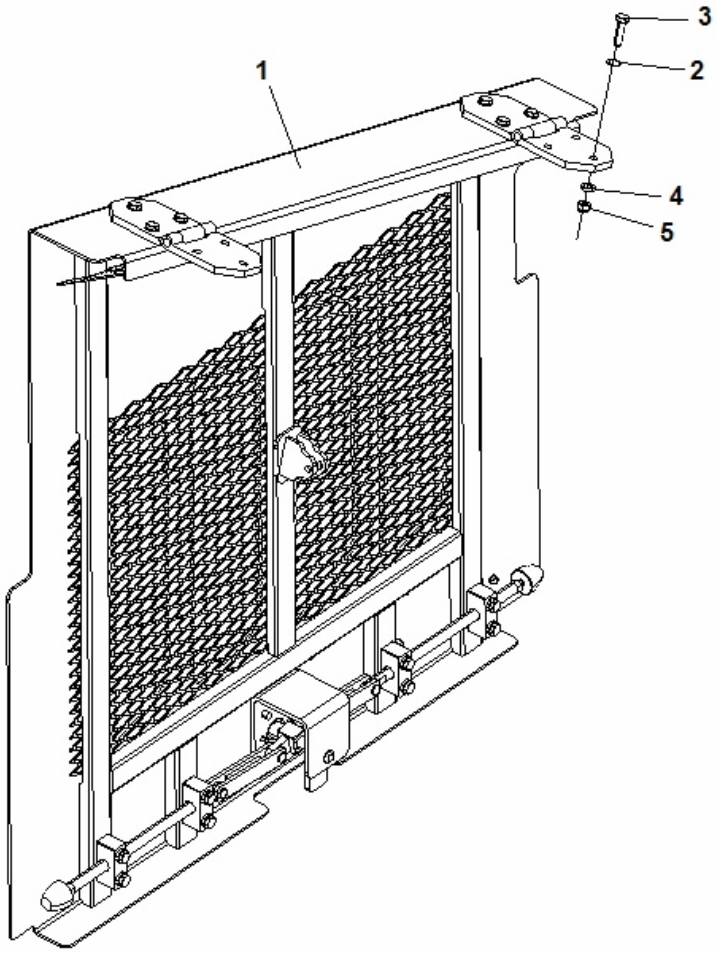

Item	Part No.	Name	Qty	L
1	4812101021	Engine Cover Right	1	
2	4700904229	Washer, 8.4x16x1.5 mm 300 HV	6	
3	4700500022	Screw	6	
4	4700904556	Steel plain washer	6	
5	4700791182	Nut, M8 -8 DIN985	6	

4812101021 Engine Cover Right 4812101021 Engine Cover Right

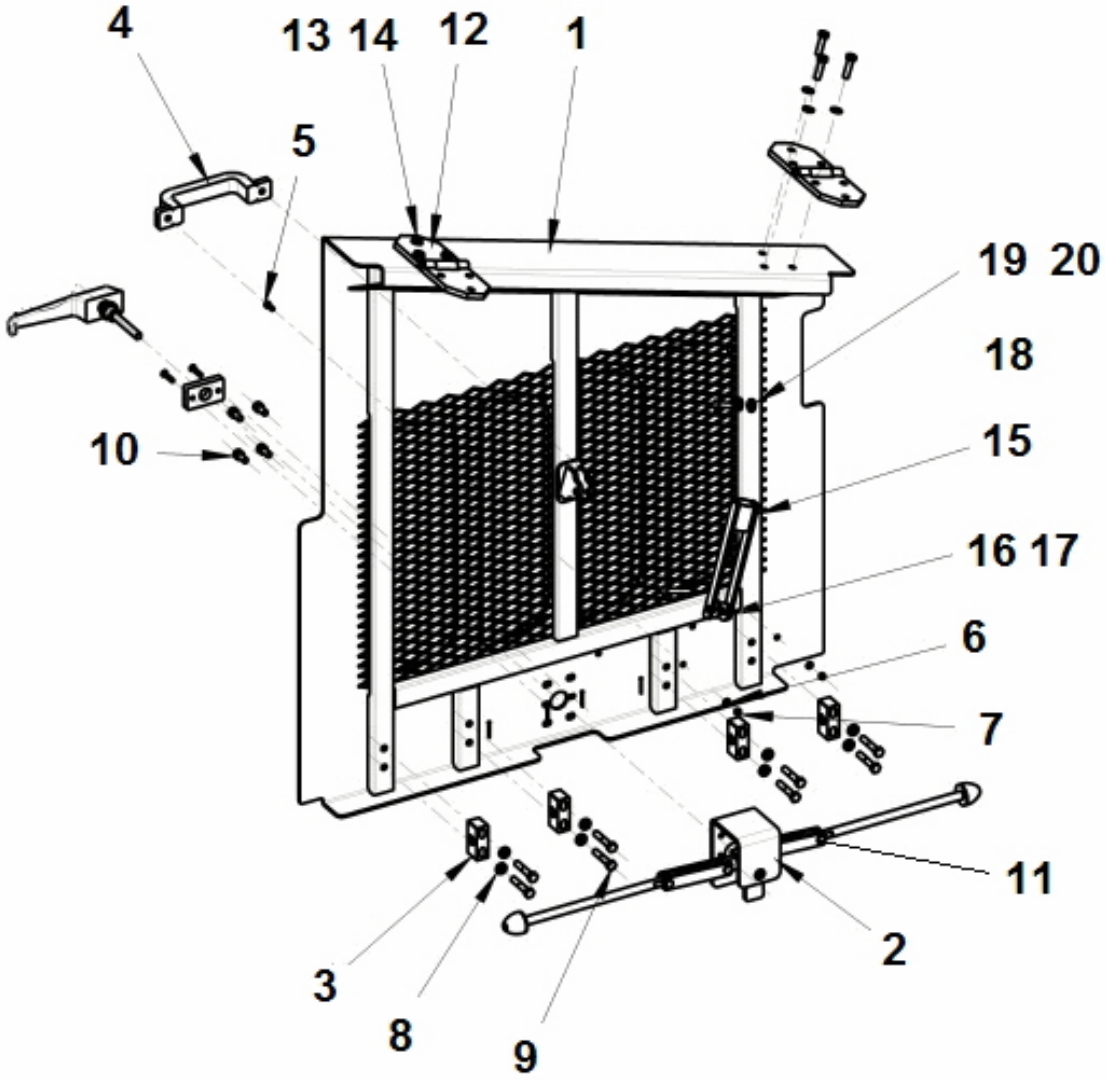

Item	Part No.	Name	Qty	L
1	4812100542	Side cover, right	1	
2	4812100563	Locking Device Assembly	1	
3	4812100564	Shaft Guide	4	
4	4700904874	Grab handle	1	
5	4700500184	Screw M5-0,8x14 8,8	2	
6	4700904281	Washer, 5,3x10x1 300HV	2	
7	4700791476	Lock nut	2	
8	4700904556	Steel plain washer	8	
9	4700500024	Screw M8x45	8	
10	4700508005	Screw	4	
11	4700630005	Cotter pin	6	
12	4700196863	Hinge	2	
13	4700904229	Washer, 8.4x16x1.5 mm 300 HV	6	
14	4700500022	Screw	6	
15	4812101068	Safe lock	1	
16	4700904734	Washer, 8.4x26x4 mm 300 HV	2	
17	4812100511	Pin	1	
18	4700900477	Shock absorber	1	
19	4700904705	Washer	2	
20	4812101116	Pin	1	

4812101021 Engine Cover Right 4812100563 Locking Device Assembly

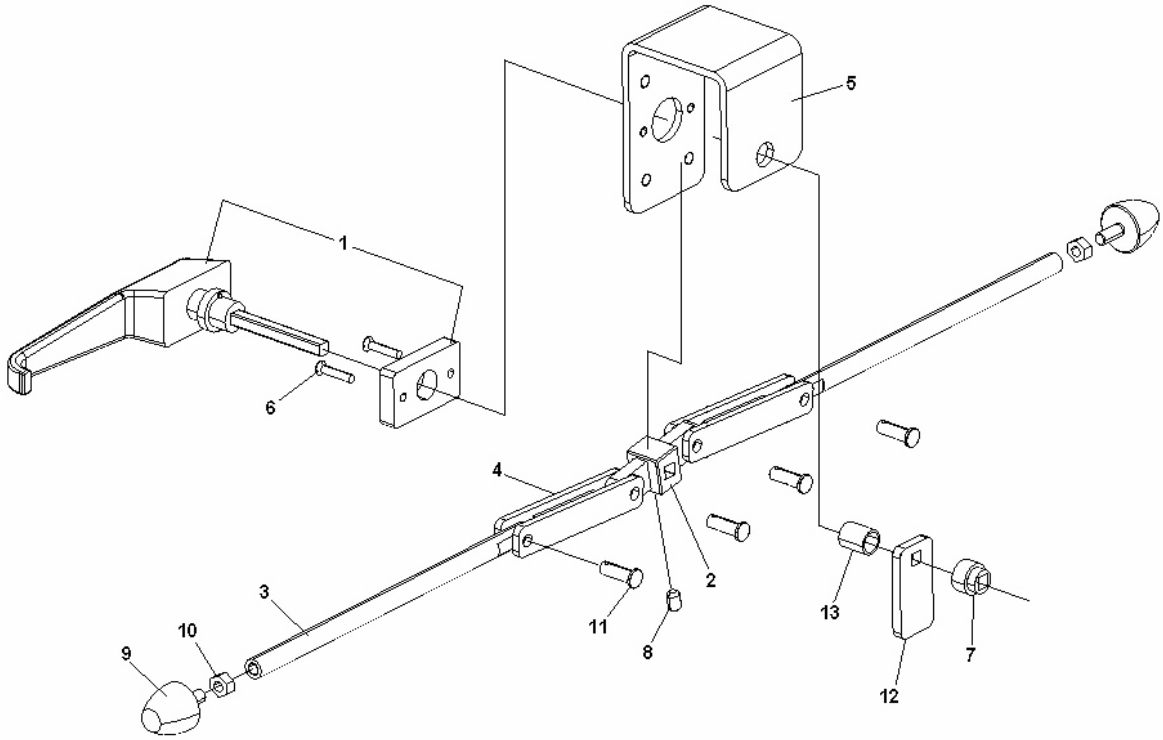

Item	Part No.	Name	Qty	L
1	4700382165	Locking handle	1	
2	4812100635	Lock	1	
3	4812100502	Rod	2	
4	4812100644	Bar	2	
5	4812100503	Bracket	1	
6	4700535010	Tamper cutter 1000 mm	2	
7	4700382335	Spacer sleeve	1	
8	4700516049	Threaded pin	1	
9	4700925629	Shock absorber	2	
10	4700570005	Hex. nut	2	
11	4812100504	Pin	4	
12	4812101114	Lock	1	
13	4812101113	Shim	1	

4812100562 Engine Cover Module Left 4812100562 Engine Cover Module Left

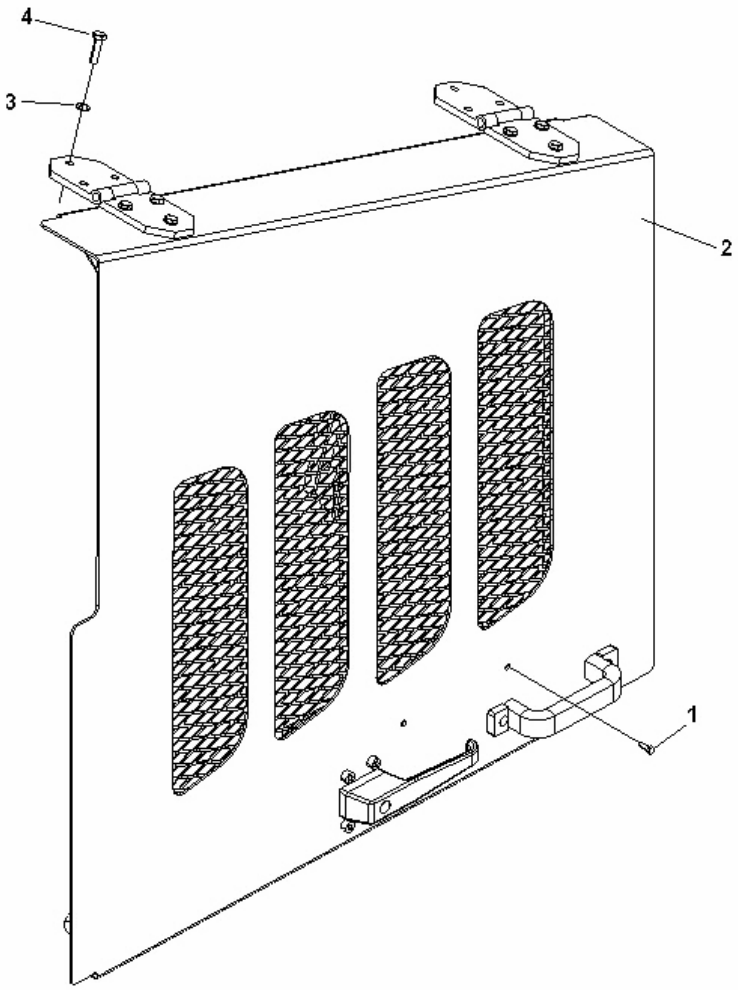

Item	Part No.	Name	Qty	L
1	4700500184	Screw M5-0,8x14 8,8	2	
2	4812101022	Engine Door Assy Left	1	
3	4700904229	Washer, 8.4x16x1.5 mm 300 HV	6	
4	4700500022	Screw	6	

4812101022 Engine Door Assy Left 4812101022 Engine Door Assy Left

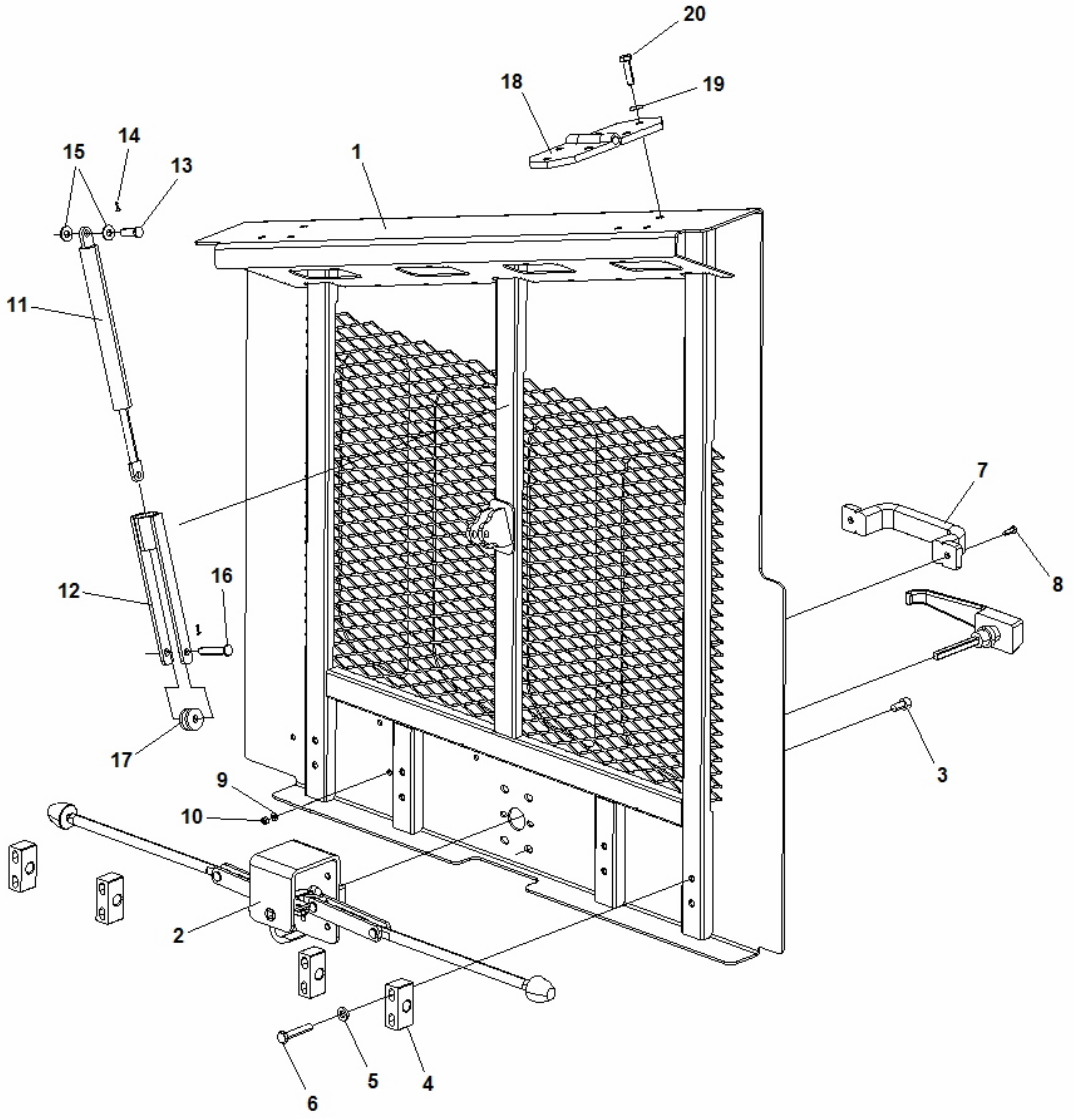

Item	Part No.	Name	Qty	L
1	4812100543	Sider Cover, Left	1	
2	4812100563	Locking Device Assembly	1	
3	4700508005	Screw	4	
4	4812100564	Shaft Guide	4	
5	4700904556	Steel plain washer	8	
6	4700500024	Screw M8x45	8	
7	4700904874	Grab handle	1	
8	4700500184	Screw M5-0,8x14 8,8	2	
9	4700904281	Washer, 5,3x10x1 300HV	2	
10	4700791476	Lock nut	2	
11	4700900477	Shock absorber	1	
12	4812101068	Safe lock	1	
13	4812101116	Pin	1	
14	4700630005	Cotter pin	2	
15	4700904705	Washer	2	
16	4812100511	Pin	1	
17	4700904734	Washer, 8.4x26x4 mm 300 HV	2	
18	4700196863	Hinge	2	
19	4700904229	Washer, 8.4x16x1.5 mm 300 HV	6	
20	4700500022	Screw	6	

Referenced Pages

4812100563 Locking Device Assembly 97

4812101030 Support Tank Module 4812101030 Support Tank Module

This page intentionally left blank

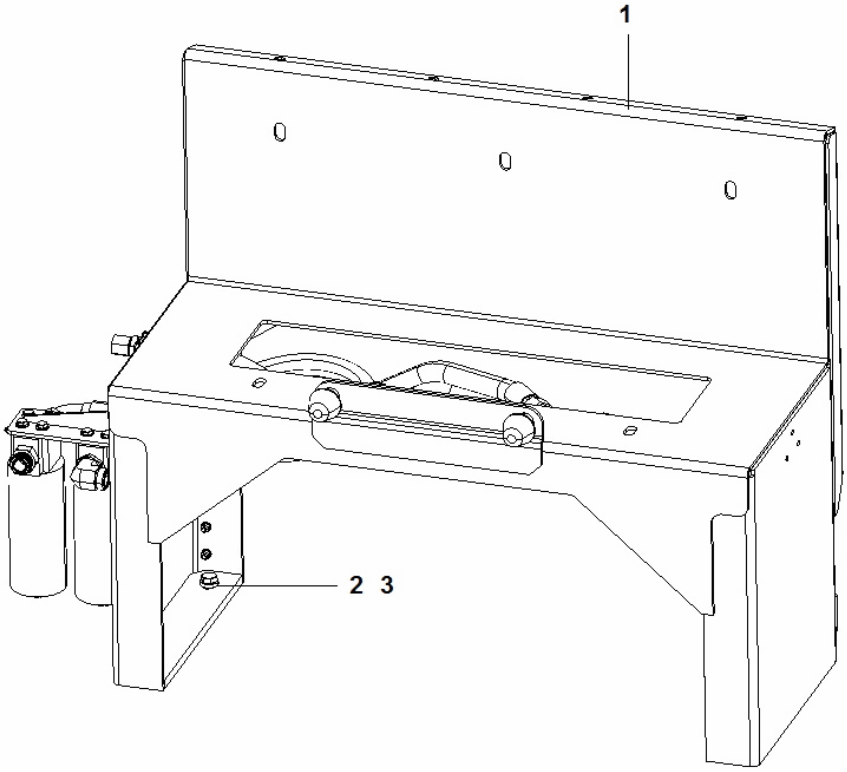
1
2 3

Item	Part No.	Name	Qty	L
1	4812101035	Tank Bracket Assy	1	
2	4700904558	Washer, 17x30x6 mm 300 HV	4	
3	4700500102	Hex. screw	4	

4812101035 Tank Bracket Assy 4812101035 Tank Bracket Assy

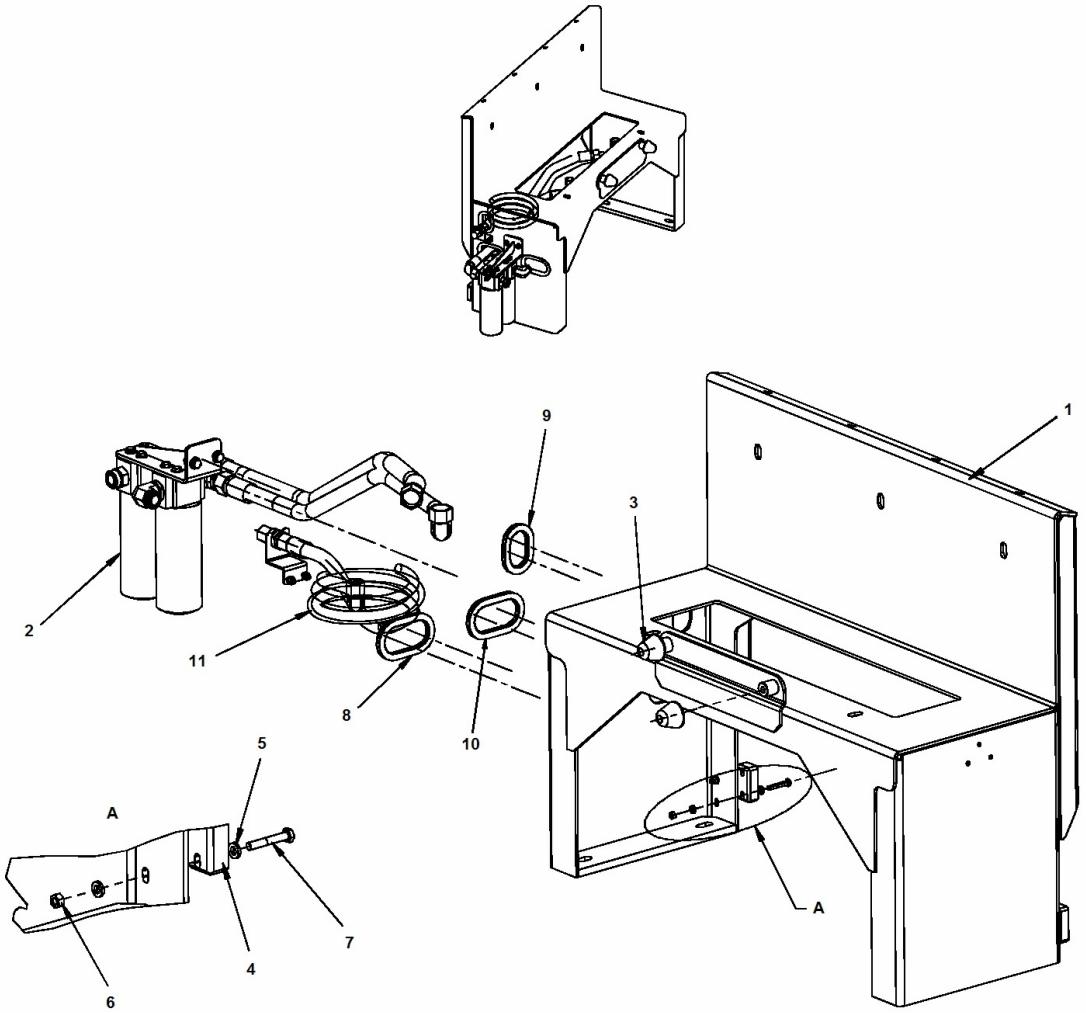

Item	Part No.	Name	Qty	L
1	4812100560	Hydraulic Tank Bracket	1	
2	4812101033	Oil Filter Module	1	
3	4812100516	Stop	2	
4	4812100716	Housing	2	
5	4700904556	Steel plain washer	8	
6	4700570005	Hex. nut	4	
7	4700500025	Screw, M8 x 50 mm 8.8 A2K	4	
8	4700202028	Edge trim	1XL	
9	4700202028	Edge trim	1XL	
10	4700202028	Edge trim	1XL	
11	4812101799	Drail kit	1	

Comments for Page: 4812101035 Tank Bracket Assy

(L)OCAL REMARKS

A | en_US | L = 0,5 m

4812101035 Tank Bracket Assy 4812101799 Drail kit

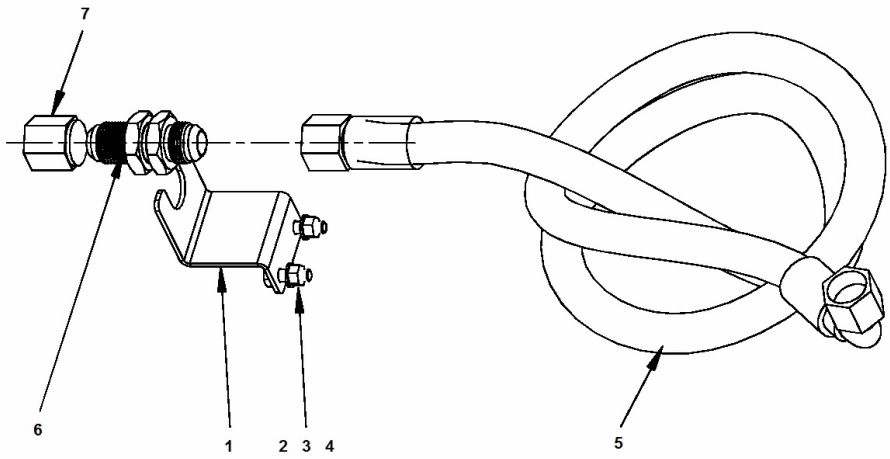

Item	Part No.	Name	Qty	L
1	4812101785	Bracket	1	
2	4700904229	Washer, 8.4x16x1.5 mm 300 HV	4	
3	4700570005	Hex. nut	2	
4	4700500021	Hex. screw	2	
5	4812101786	Hose	1	
6	4700230456	Straight connector	1	
7	4700230401	Plug	1	

4812101035 Tank Bracket Assy 4812101033 Oil Filter Module

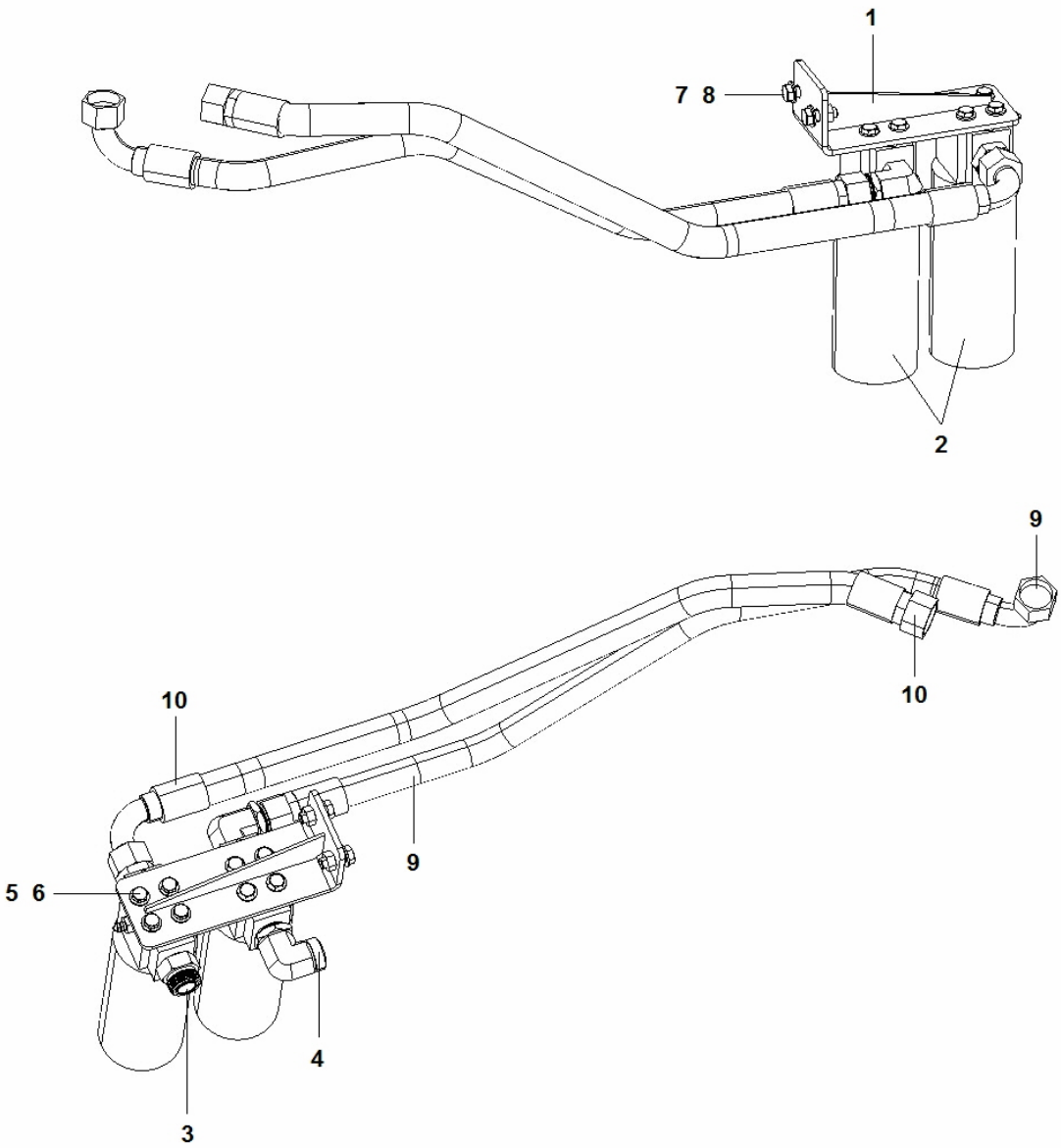

Item	Part No.	Name	Qty	L
1	4812101069	Bracket	1	
2	4700359550	Hydraulic oil filter, cpl	2	
3	4700792339	Adapter	2	
4	4700792299	Adapter	2	
5	4700904230	Washer	8	
6	4700500028	Screw, M10x25 mm 8.8 A3K	8	
7	4700904231	Steel plain washer, 13x24x2 mm 300 HV	2	
8	4700500046	Hex. head screw M12x030H	2	
9	4812101795	Hydraulic hose	1	
10	4812101796	Hydraulic hose	1	

4812315964 Scraper module Scraper module EU/US

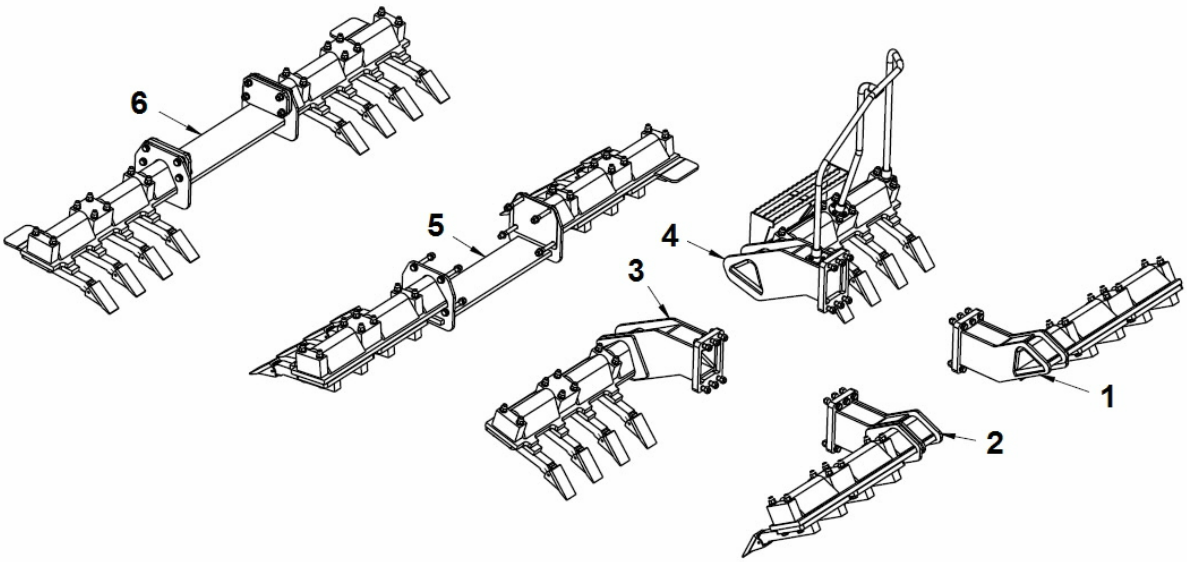

Item	Part No.	Name	Qty	L
1	4812315932	Scraper assy left	1	
2	4812315937	Scraper module right	1	
3	4812315931	Scraper assy right	1	
4	4812315930	Scraper module left	1	
5	4812315934	Scraper module	1	
6		Scraper assy	1	

4812315932 Scraper module Scraper assy left

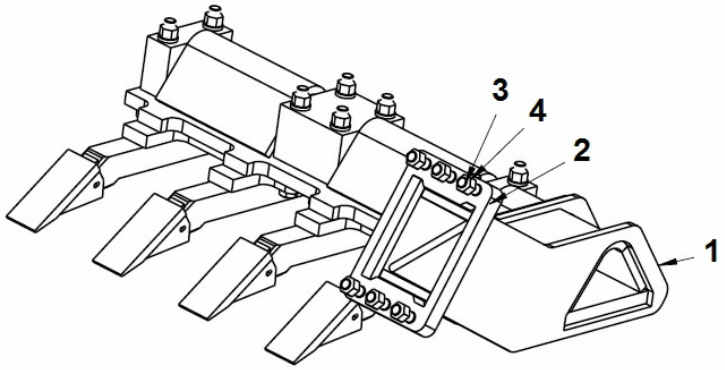

Item	Part No.	Name	Qty	L
1	4812315961	Scraper assy left	1	
2	4700903290	Steel plain washer 21x36x6	2	
3	4700925208	Screw M20x90	6	
4	4700925867	Distance sleeve M 20 DIN 934 10.	6	

4812315932 Scraper module Scraper assy right

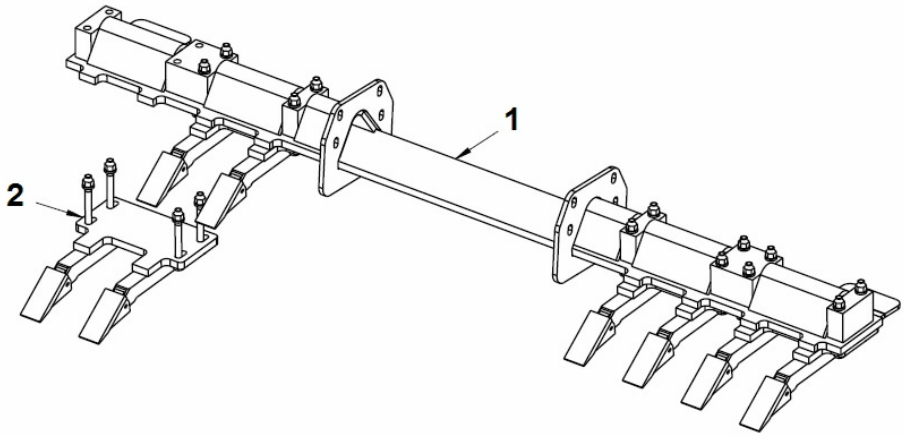

Item	Part No.	Name	Qty	L
1	4812315874	Beam	1	
2	4812315923	Scraper assy	4	

4812315932 Scraper module Scraper assy left

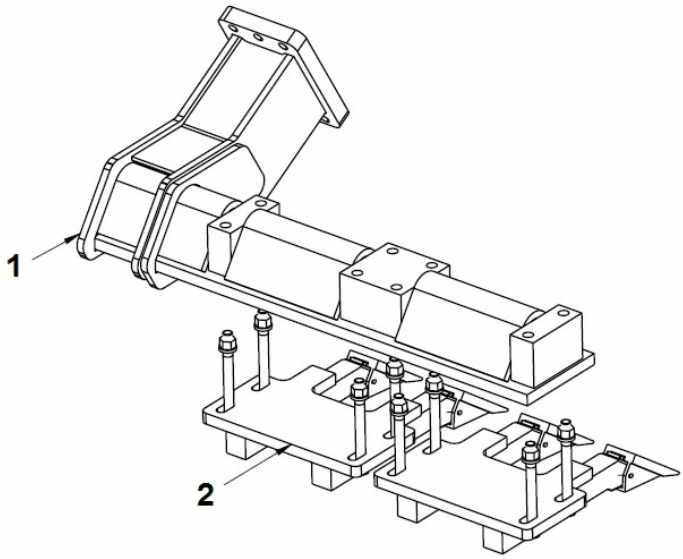

Item	Part No.	Name	Qty	L
1	4812315879	Beam right	1	
2	4812315923	Scraper assy	2	

4812315937 Scraper assy right Scraper module right

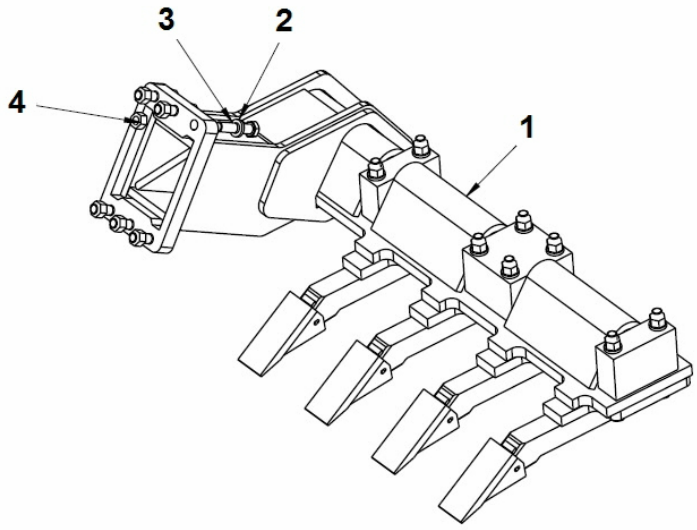

Item	Part No.	Name	Qty	L
1	4812315958	Scraper assy right	1	
2	4700903290	Steel plain washer 21x36x6	6	
3	4700925208	Screw M20x90	6	
4	4700925867	Distance sleeve M 20 DIN 934 10.	6	

4812315937 Scraper assy right Scraper assy right

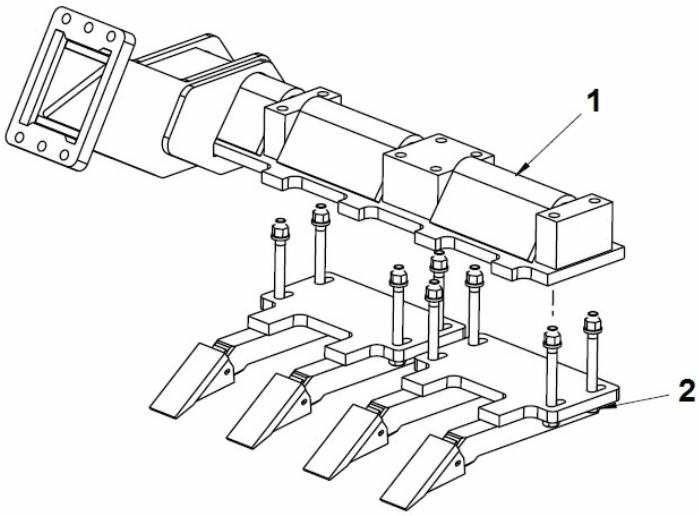

Item	Part No.	Name	Qty	L
1	4812315878	Beam right	1	
2	4812315923	Scraper assy	2	

4812315931 Scrapers assy Scraper assy right

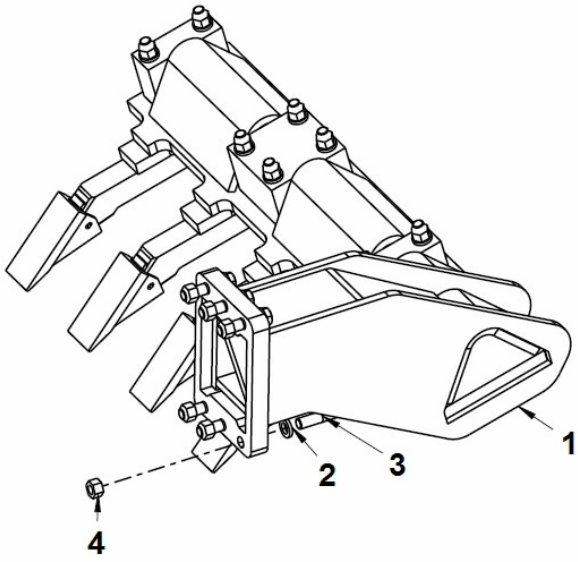

Item	Part No.	Name	Qty	L
1	4812315960	Scraper assy right	1	
2	4700903290	Steel plain washer 21x36x6	6	
3	4700925208	Screw M20x90	6	
4	4700925867	Distance sleeve M 20 DIN 934 10.	6	

4812315931 Scrapers assy Scraper assy right

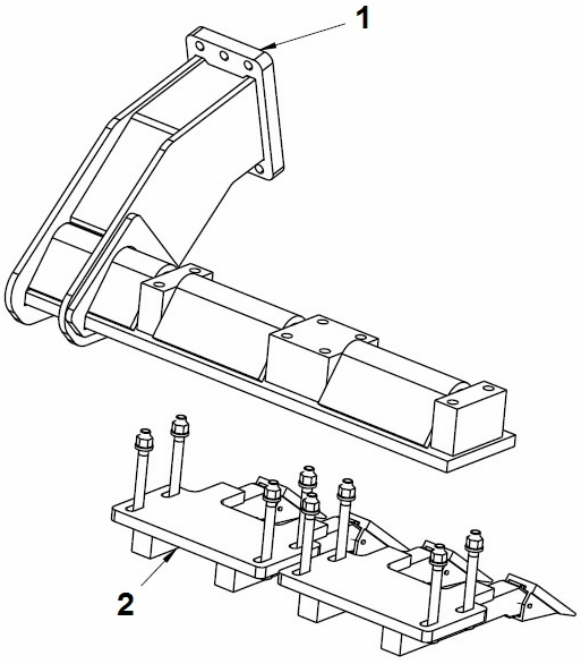

Item	Part No.	Name	Qty	L
1	4812315925	Beam left	1	
2	4812315923	Scraper assy	2	

4812315930 Scrapers assy left Scraper module left

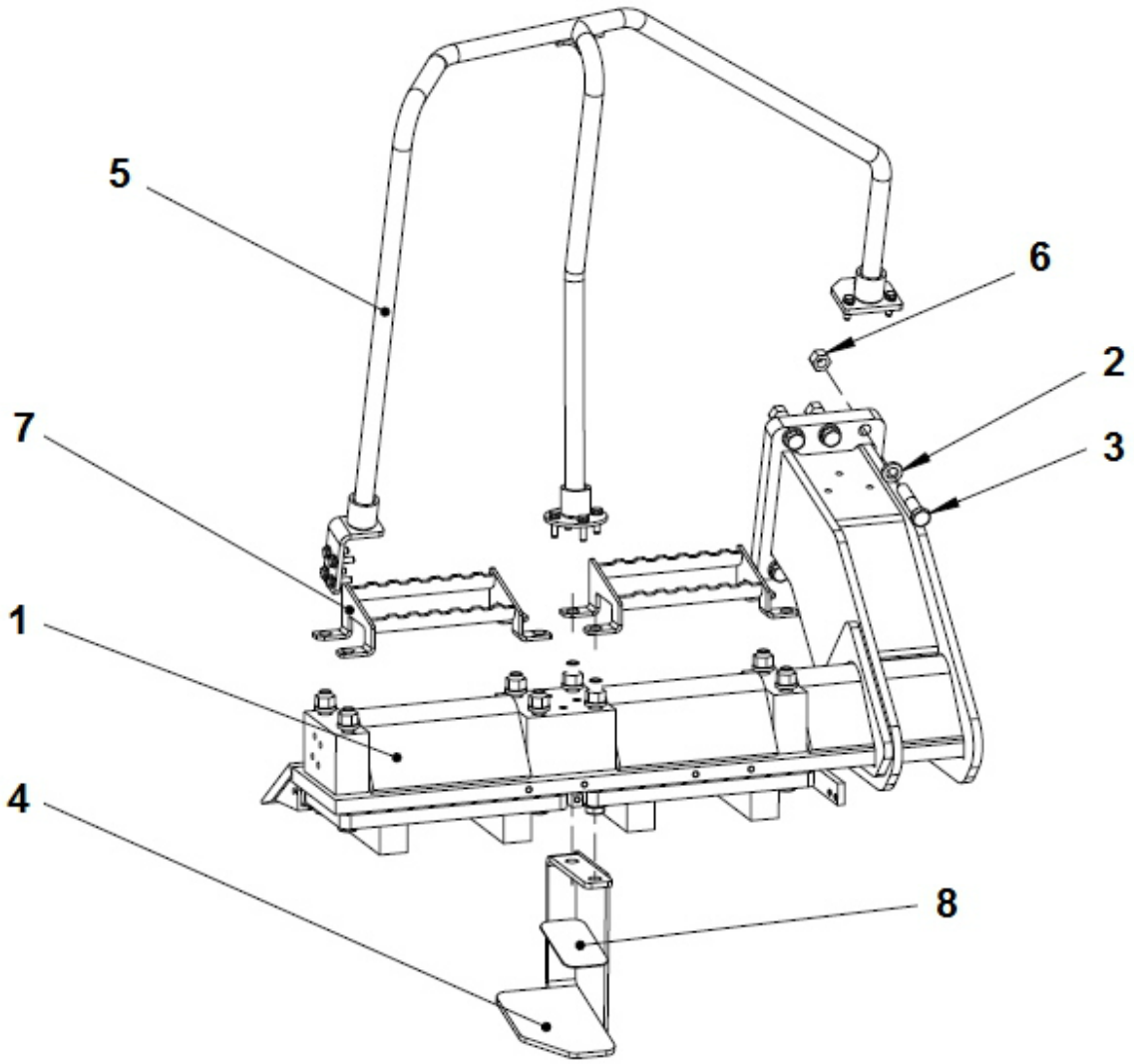

Item	Part No.	Name	Qty	L
1	4812315959	Scraper assy left	1	
2	4700903290	Steel plain washer 21x36x6	6	
3	4700925208	Screw M20x90	6	
4	4812316596	Step	1	
5	4812315922	Handrail module	1	
6	4700925867	Distance sleeve M 20 DIN 934 10.	6	
7	4812316595	Platform	2	
8	4700370058	Non skid plate	1	

4812315930 Scrapers assy left Scraper assy left

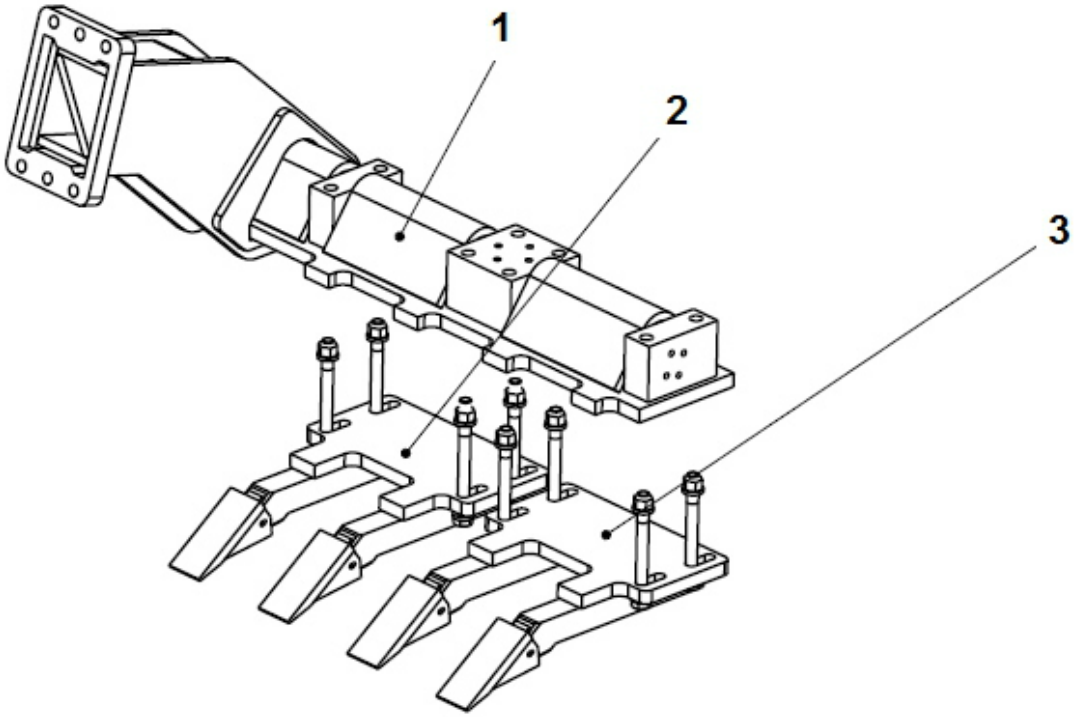

Item	Part No.	Name	Qty	L
1	4812315924	Beam left	1	
2	4812316594	Scraper assy	1	
3	4812315923	Scraper assy	1	

4812315930 Scrapers assy left Handrail module

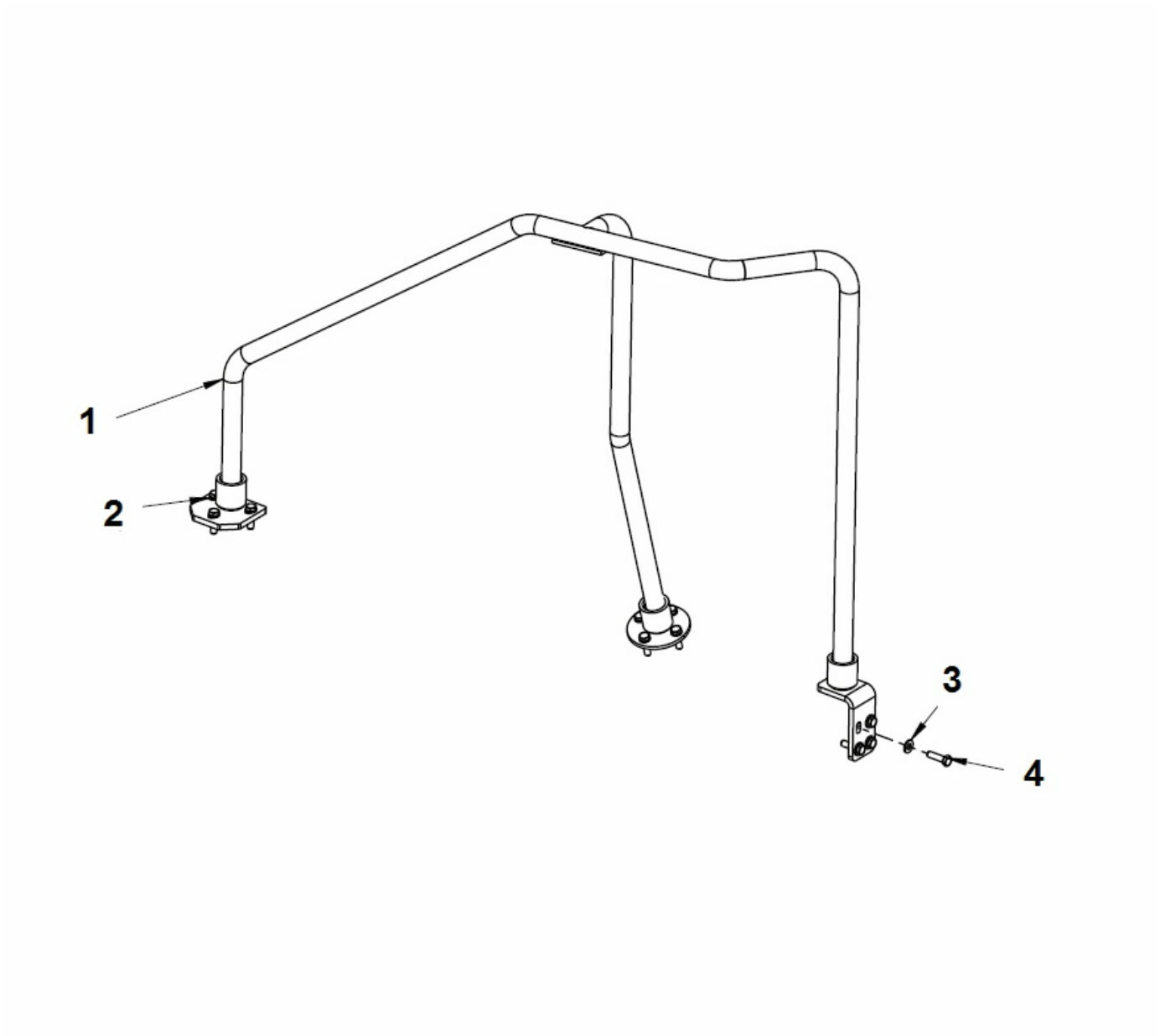

Item	Part No.	Name	Qty	L
1	4812315921	Handrail	1	
2	4700904637	Washer	7	
3	4700904230	Washer	4	
4	4700500030	Hexagon head screw	11	

4812315930 Scrapers assy left Scraper assy

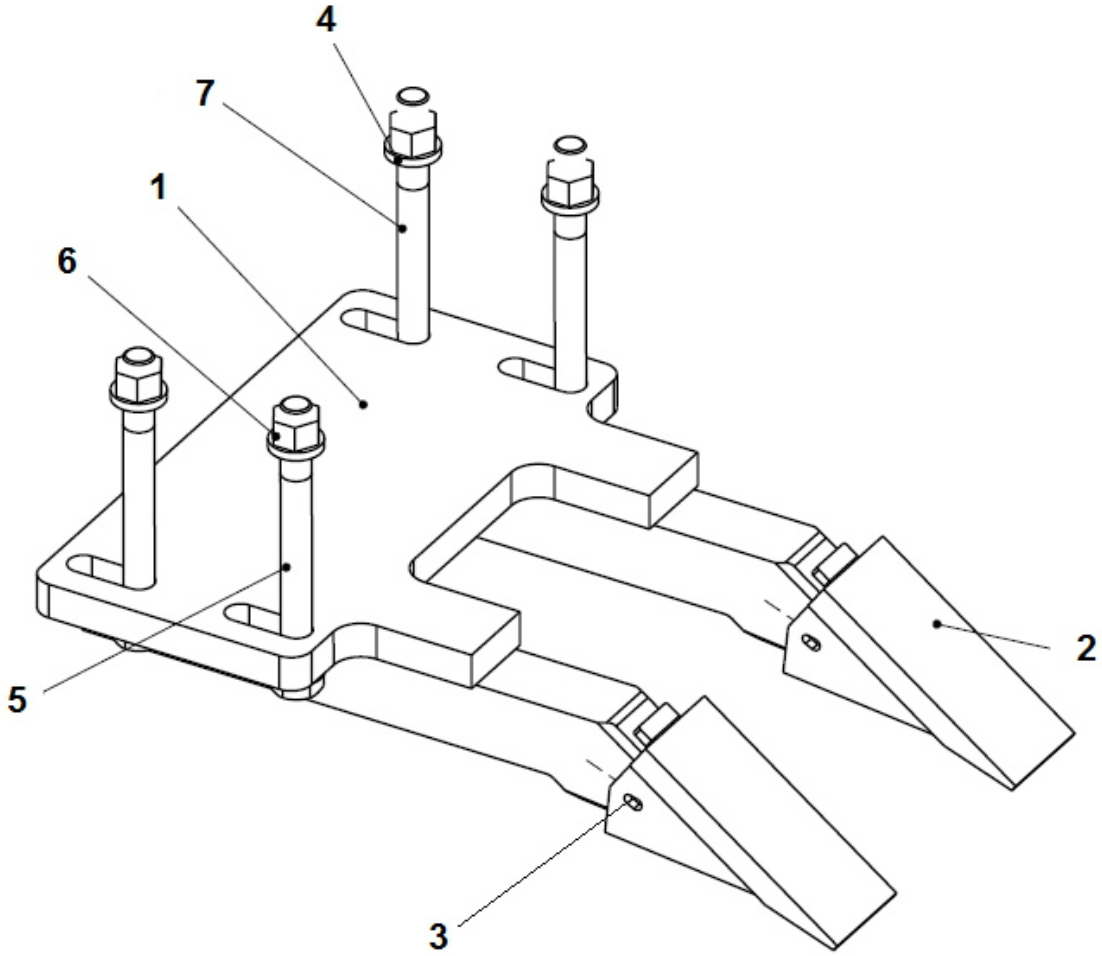

Item	Part No.	Name	Qty	L
1	4812315904	Scraper tooth	1	
2	4700262473	Scraper	2	
3	4700262474	Pin	2	
4	4700903290	Steel plain washer 21x36x6	8	
5	4700923814	Screw M20-2,5x200 8.8	2	
6	4700925867	Distance sleeve M 20 DIN 934 10.	4	
7	4700194373	Screw	2	

4812315934 Scrapers assy Scraper module

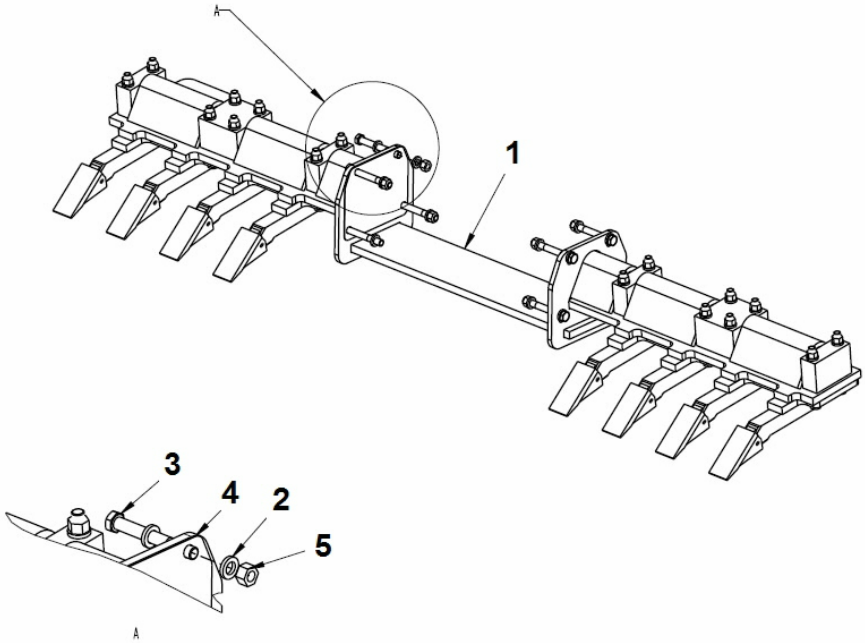

Item	Part No.	Name	Qty	L
1	4812315967	Scraper assy	1	
2	4700903290	Steel plain washer 21x36x6	16	
3	4700925209	Screw	8	
4	4812101334	Shim	4	
5	4700925867	Distance sleeve M 20 DIN 934 10.	8	

4812315934 Scrapers assy Scraper assy

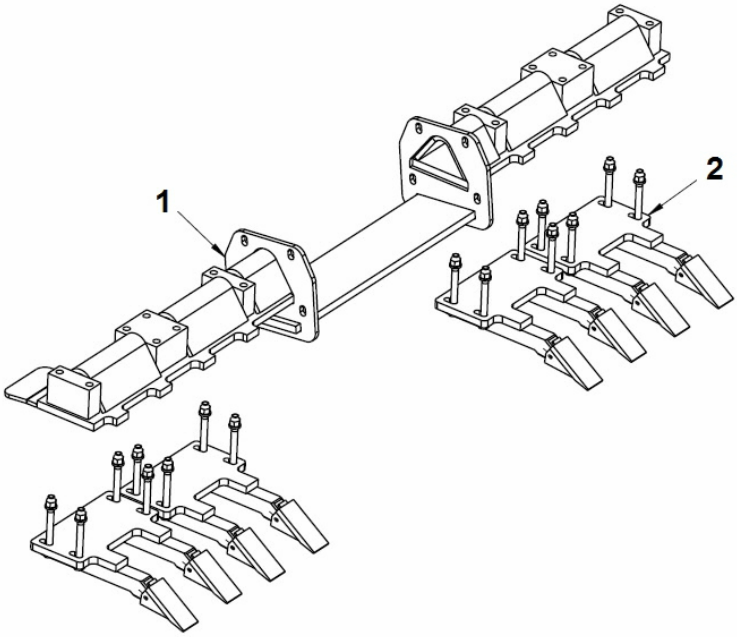

Item	Part No.	Name	Qty	L
1	4812315877	Beam	1	
2	4812315923	Scraper assy	4	

4812315933 Scraper assy rear Scraper assy

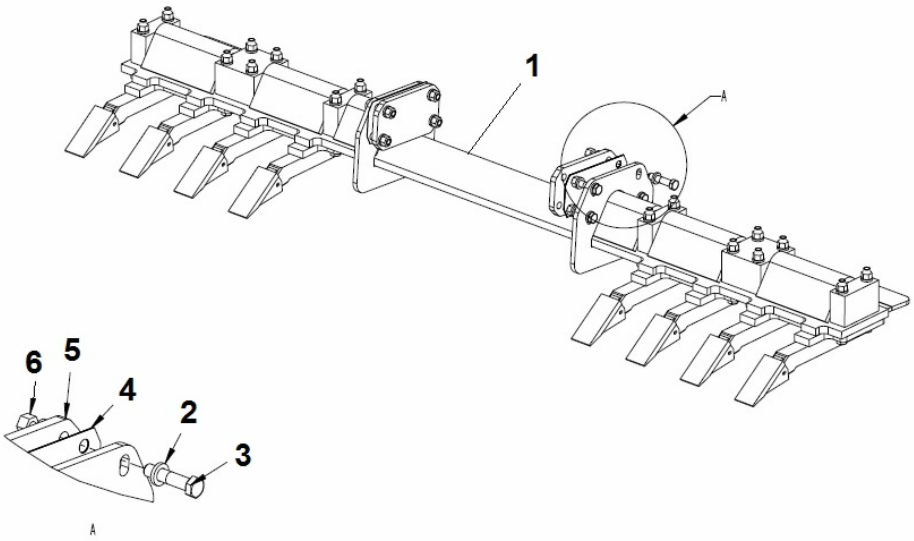

Item	Part No.	Name	Qty	L
1	4812315962	Scraper assy right	1	
2	4700903290	Steel plain washer 21x36x6	16	
3	4700925208	Screw M20x90	8	
4	4812101333	Shim	6	
5	4812101329	Spacer	2	
6	4700925867	Distance sleeve M 20 DIN 934 10.	8	

Referenced Pages

Scraper assy right 117

4812315923 Scraper tooth Scraper

This page intentionally left blank

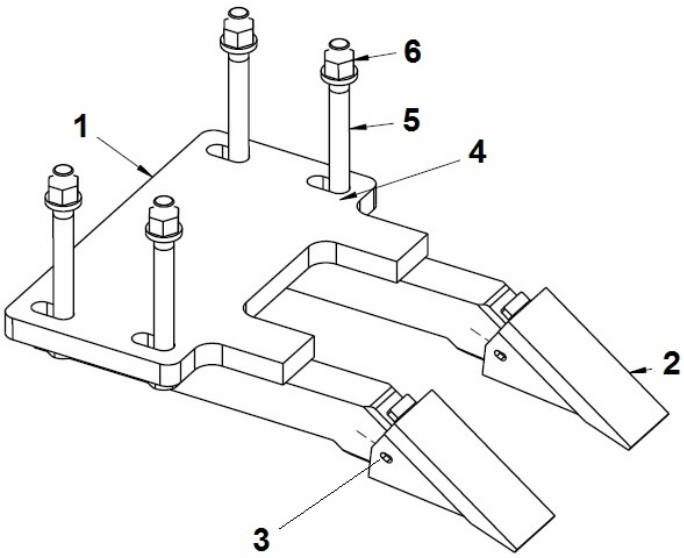
6
5
1
4
2
3

Item	Part No.	Name	Qty	L
1	4812315904	Scraper tooth	1	
2	4700262473	Scraper	2	
3	4700262474	Pin	2	
4	4700903290	Steel plain washer 21x36x6	8	
5	4700923814	Screw M20-2,5x200 8.8	4	
6	4700925867	Distance sleeve M 20 DIN 934 10.	4	

Operator platform 4700391090 Seat comfort module

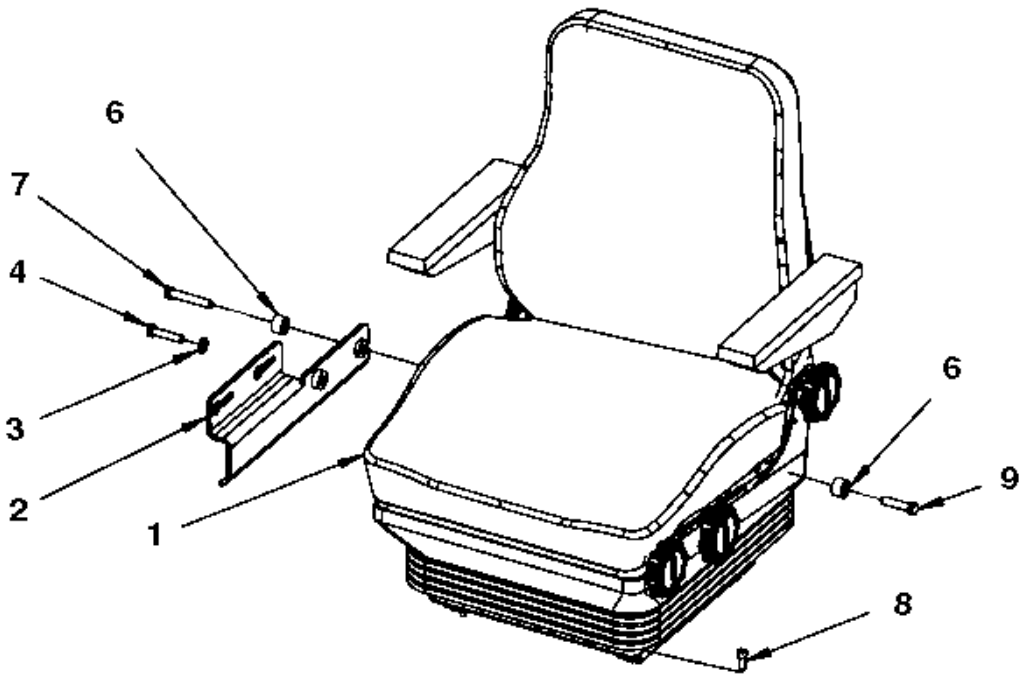

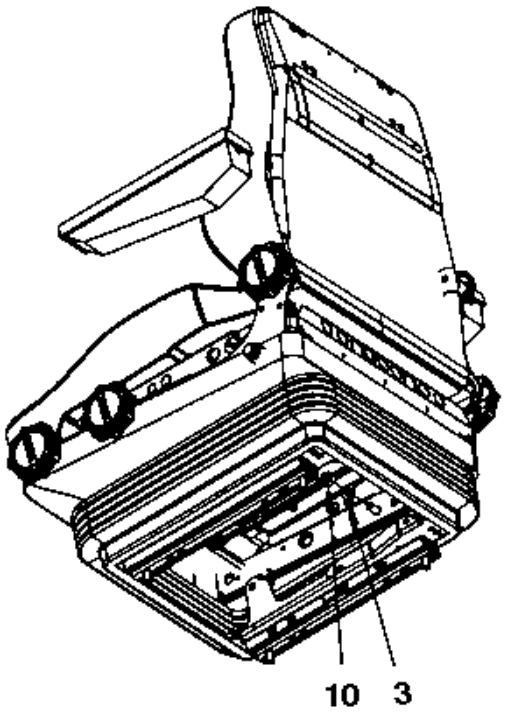

Item	Part No.	Name	Qty	L
1	4700390013	Seat	1	A
.1	4700937892	Seat switch	1	
.1	4700937620	Arm rest, right	1	
.1	4700937621	Arm rest, left	1	
2	4700390169	Bracket	1	
3	4700904230	Washer	2	
4	4700500161	Screw	1	
6	4700791572	Spacer washer	2	
7	4700792501	Screw	1	
8	4700508092	Screw	4	
9	4700792527	Screw	1	
10	4700586018	Lock nut	1	

Comments for Page: 4700391090 Seat comfort module

(L)OCAL REMARKS

A | en_US | Without seat belt

Operator platform 4812101254 Cab heater system

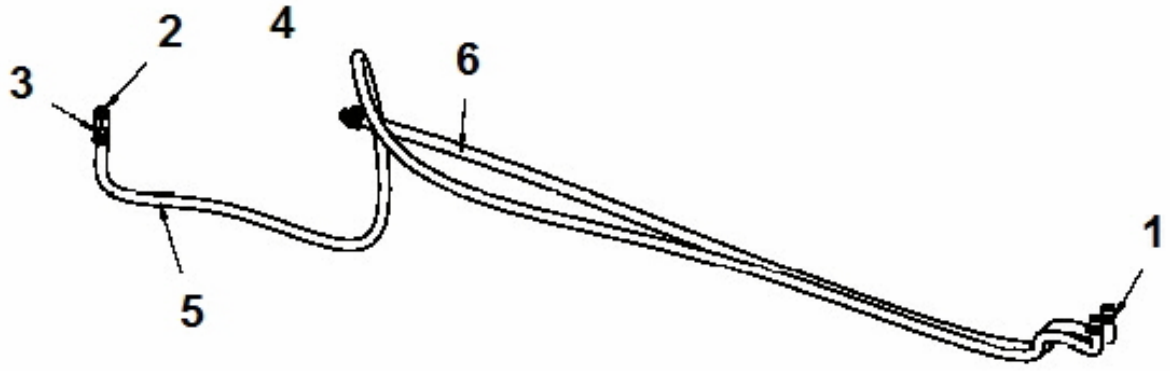

Item	Part No.	Name	Qty	L
1	4700313004	Hose clamp 19-29mm	4	
2	4812101251	Adapter	1	
3	4700387638	Hose connection	2	
4	4700813434	Reducer	1	
5	4700205112	Coolant hose	1XL	A
6	4700205112	Coolant hose	1XL	B

Comments for Page: 4812101254 Cab heater system

(L)OCAL REMARKS

A | en_US | L = 3,7m

B | en_US | L = 2,7m

Operator platform 4700391081 Seat module

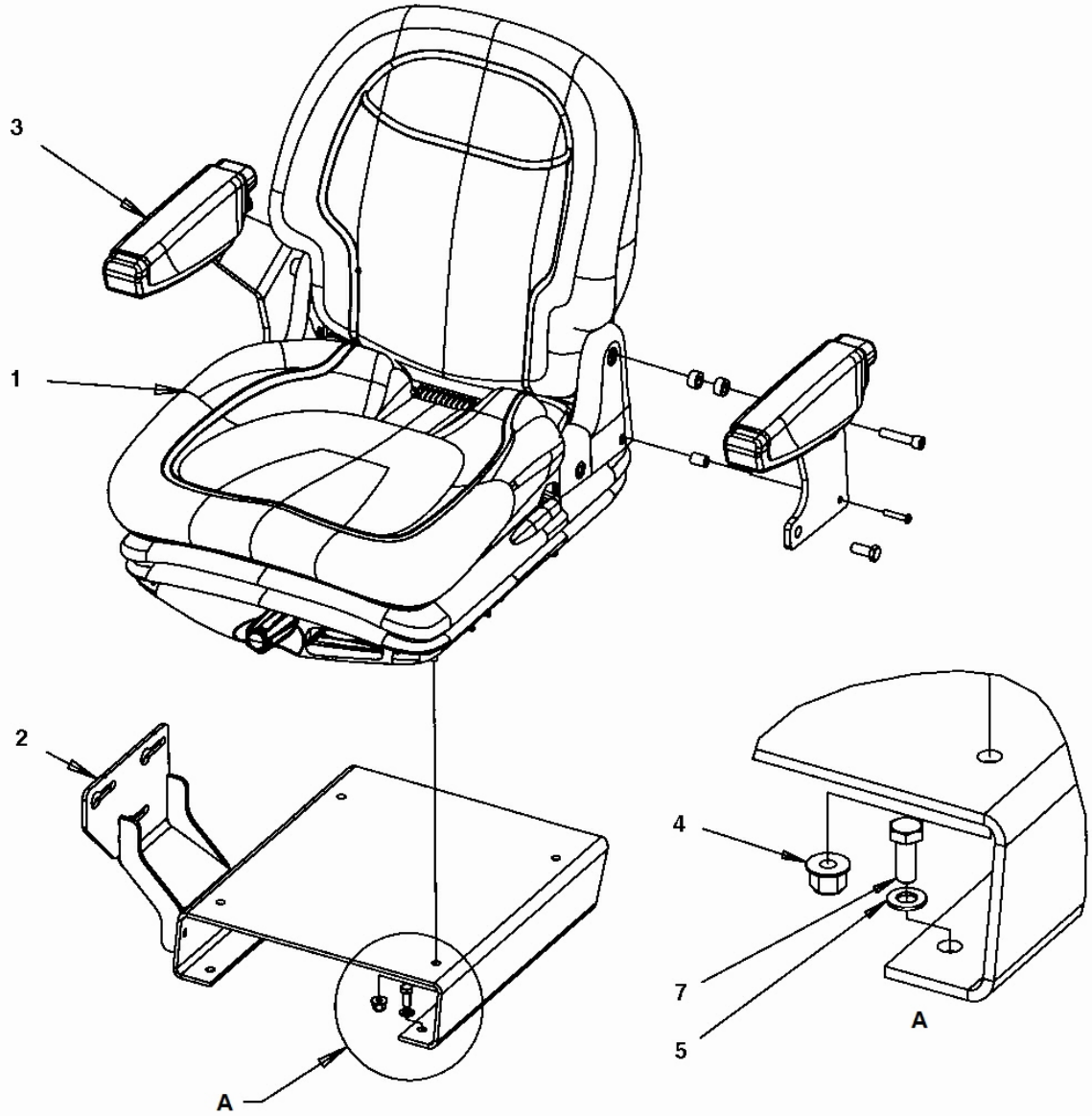

Item	Part No.	Name	Qty	L
1	4700377518	Drivers seat, cpl	1	
.1	4700945622	Seat switch	1	
1	4700945661	Adjuster kit	1	A
2	4700390561	Seat frame	1	
3	4700390963	Arm rest kit	1	
4	4700902286	Lock nut, M8x1.25 mm A2K	4	
5	4700904229	Washer, 8.4x16x1.5 mm 300 HV	4	
7	4700500053	Hex. screw	4	

Comments for Page: 4700391081 Seat module

(L)OCAL REMARKS

A | en_US | Left and right sliding rail

Operator platform 4812114766 Rear view mirror module

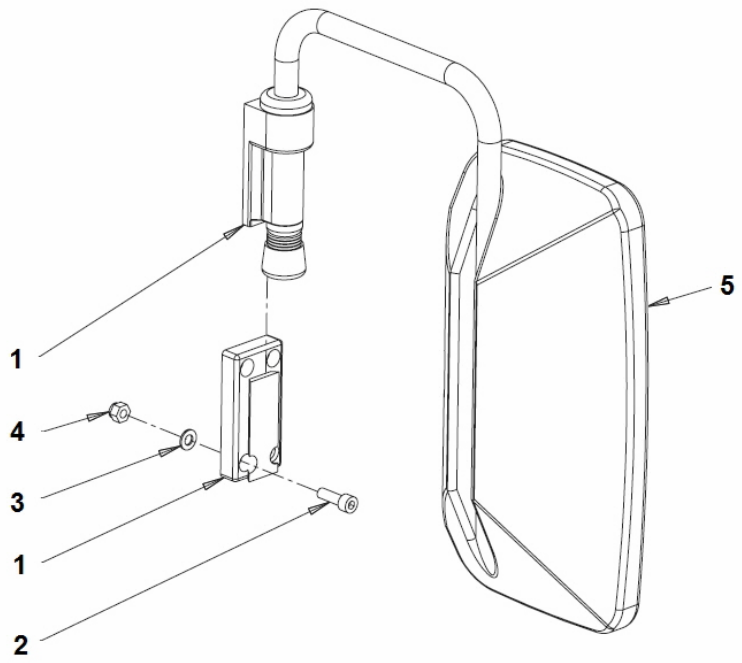

Item	Part No.	Name	Qty	L
1	4812110367	Bracket	1	
2	4700900777	Screw	4	
3	4700904229	Washer, 8.4x16x1.5 mm 300 HV	4	
4	4700586003	Hexagon lock nut M8	4	
5	4700381943	Mirror	1	

4812101000 Cab module 4812101000 Cab module

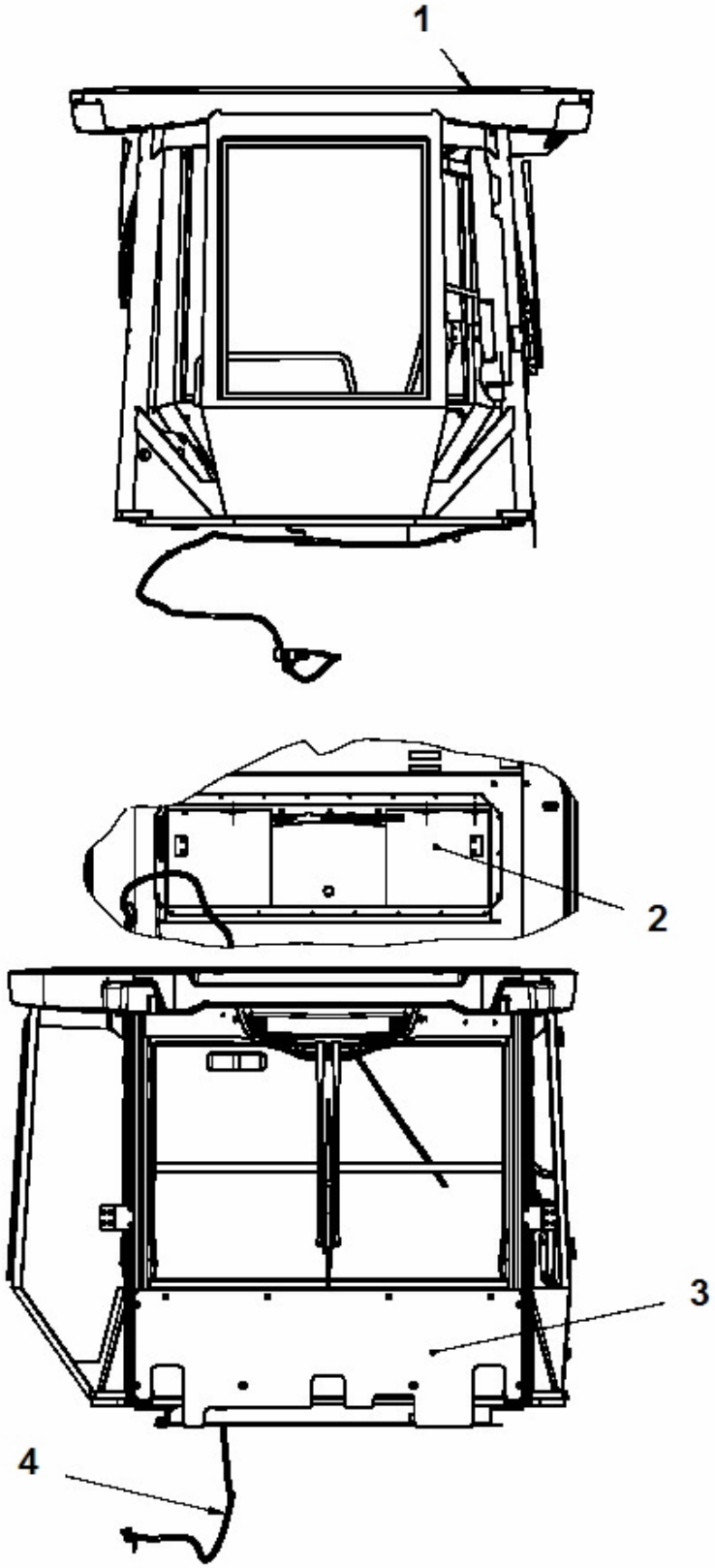

Item	Part No.	Name	Qty	L
1	4812101644	Cab assembly	1	
2	4812101243	Cover module	2	
3	4812101854	Cover kit	1	
4	4812100839	Wiring Harness Kit	1	

4812101000 Cab module 4812101243 Cover module

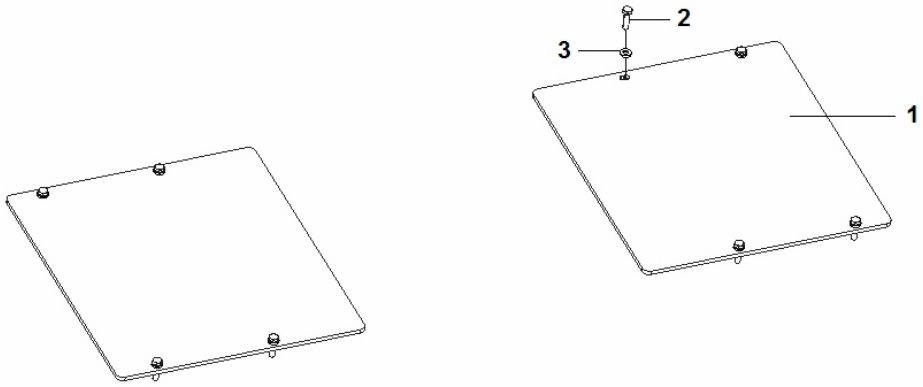

Item	Part No.	Name	Qty	L
1	4812100505	Cabin floor	2	
2	4700500022	Screw	8	
3	4700904556	Steel plain washer	8	

4812101000 Cab module 4812101854 Cover kit

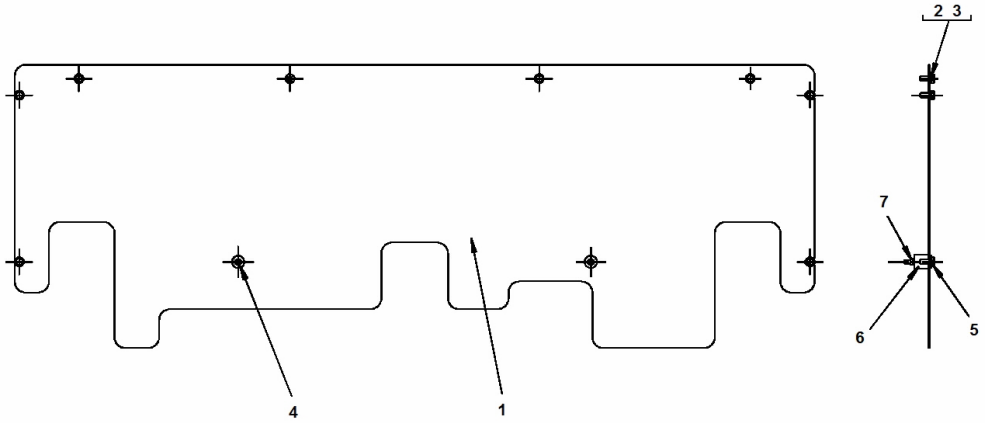

Item	Part No.	Name	Qty	L
1	4812100898	Cover	1	
2	4700904556	Steel plain washer	8	
3	4700500053	Hex. screw	8	
4	4700904735	Steel plain washer	2	
5	4700500059	Hex. screw	2	
6	4700371774	Shock absorber	2	
7	4700570004	Hex. nut	2	

4812101000 Cab module 4812100839 Wiring Harness Kit

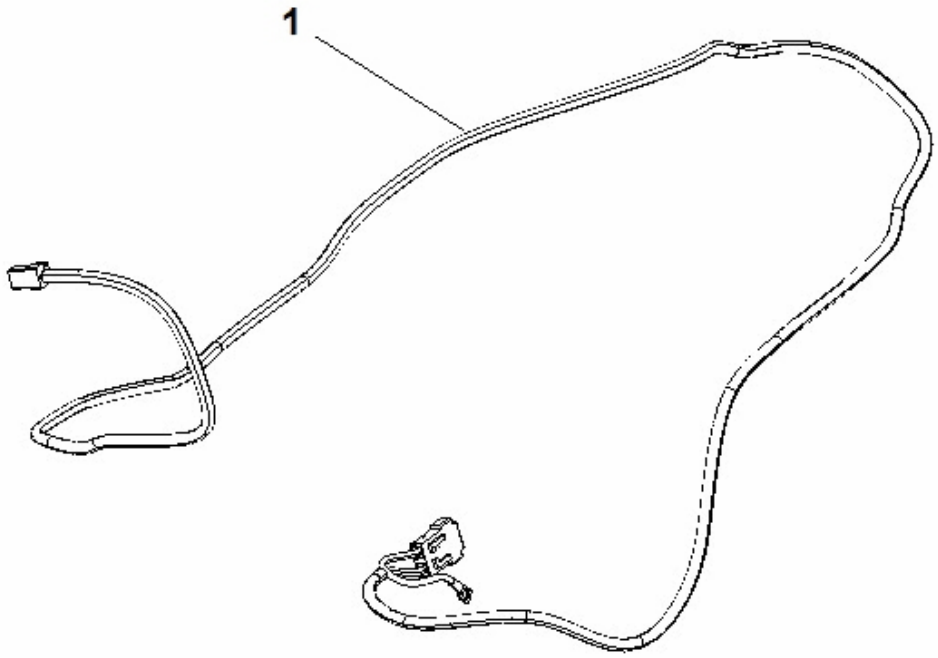

Item	Part No.	Name	Qty	L
1	4812100840	Wiring harness cab	1	
2	4812100841	Wiring Harness	1	
3	4700313041	Cable tie	1	
4	4700395352	Cable tie holder	1	

Cab assembly Cab assembly

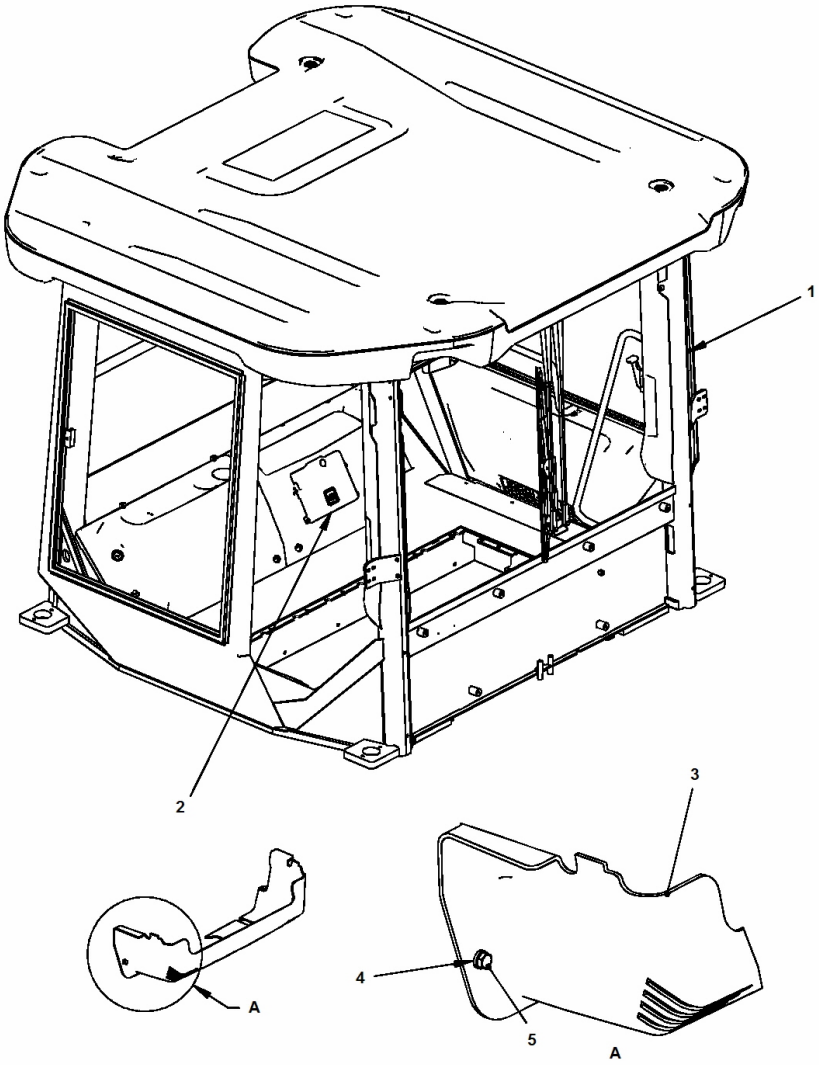

Item	Part No.	Name	Qty	L
1	4812101642	Cab	1	
2	4700394119	Manual box	1	
3	4700393582	Cover	1	
4	4700904556	Steel plain washer	2	
5	4700500018	Hex. screw	2	

Cab Cab

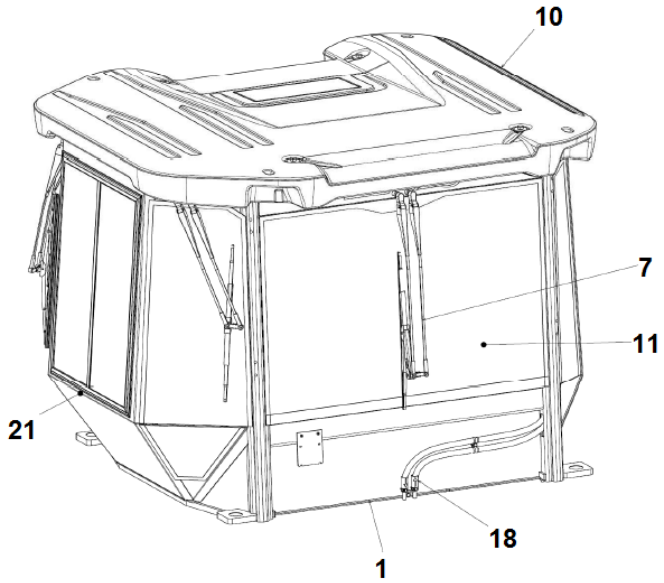

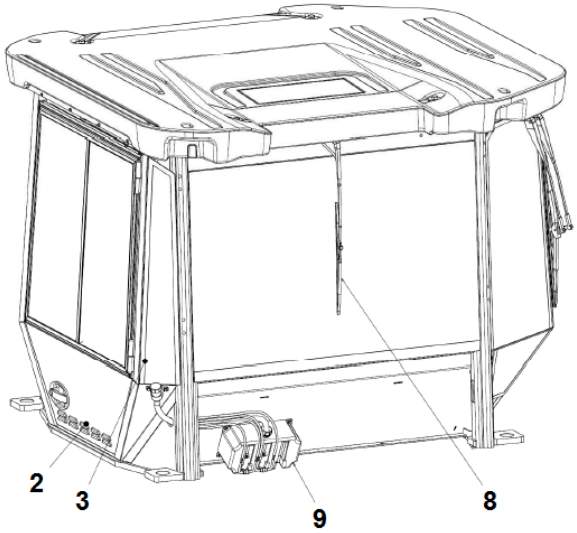

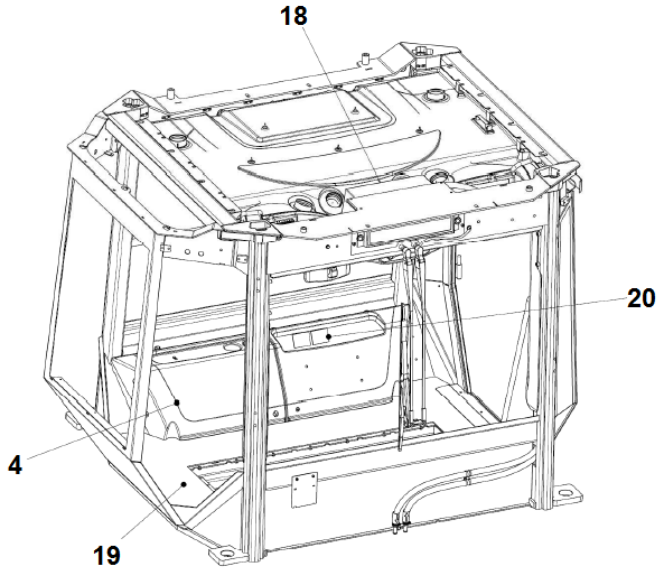

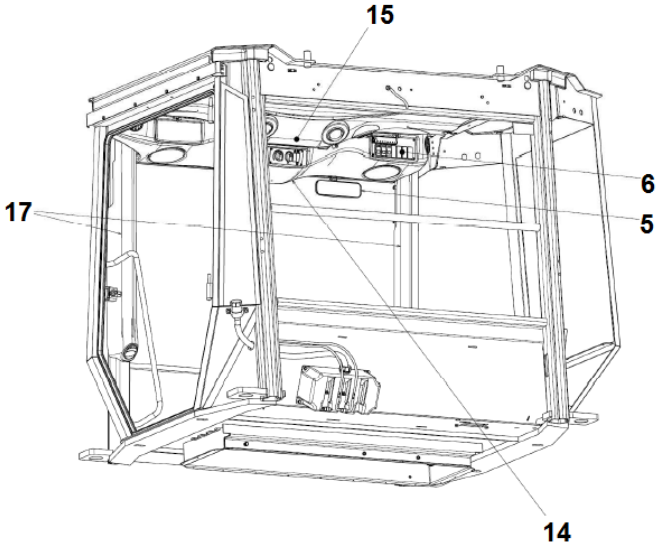

Item	Part No.	Name	Qty	L
1	4812110676	Cabin frame		
2	4812110753	Door assembly		
3	4812110754	Assembly left side		
4	4812110324	Rear plastics assembly		
5	4812110603	General installation accessories		
6	4812113368	Electric assembly cabin		
7	4812113386	Windscreen wipersystem		
8	4700395740	Rear glass wiper set		
9		Washer equipments		
10	4812113418	Roof wide assymetric		
11	4812110602	Glasswork windscreen		
13	4700395747	Glass gluing installation		
14		Mounting front panel		
15	4700395849	Roofing felt assembly		
17	4812110608	Air channel assy		
18	4812113408	Heater mount		
19	4812110614	Floor carpet		
20	4812113393	ROPS and FOPS sign assembly		
21	4812113414	Protective frame asymmetric		

Assembly left side Assembly left side

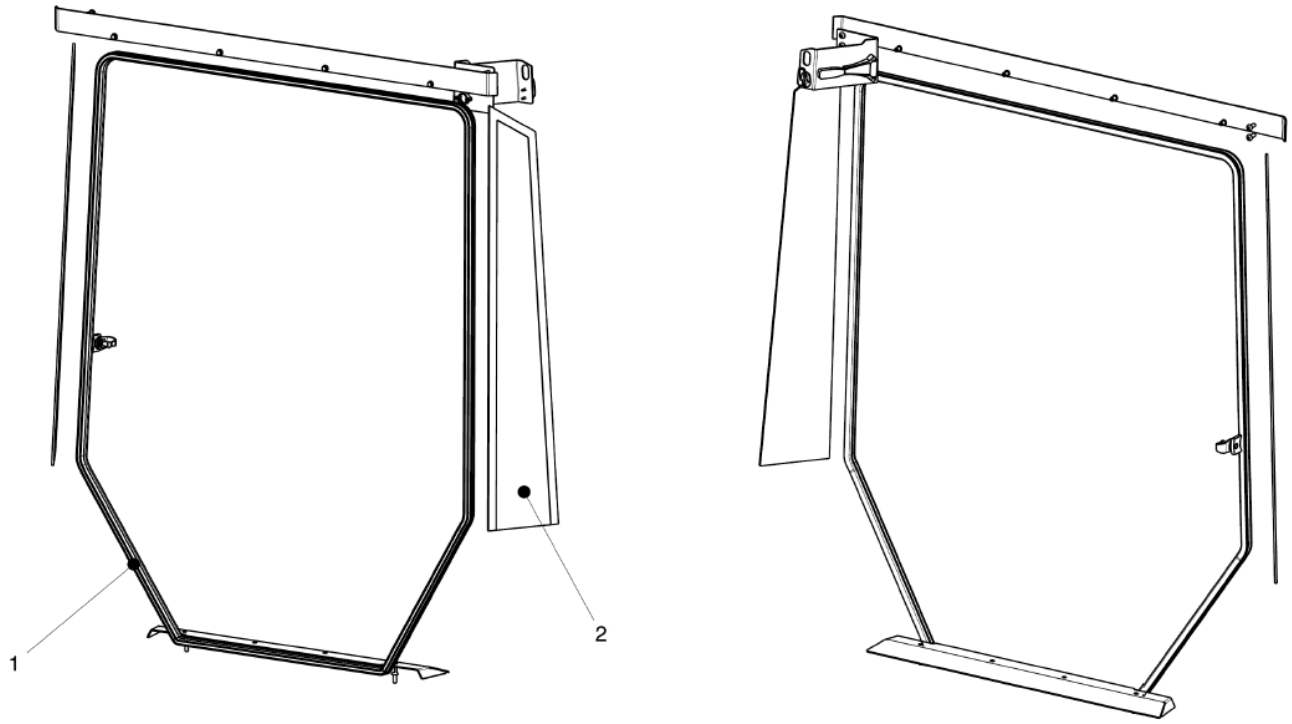

Item	Part No.	Name	Qty	L
1	4812113412	Accessories left side	1	
2	4812110601	Glasswork door side	1	

Accessories left side Accessories left side

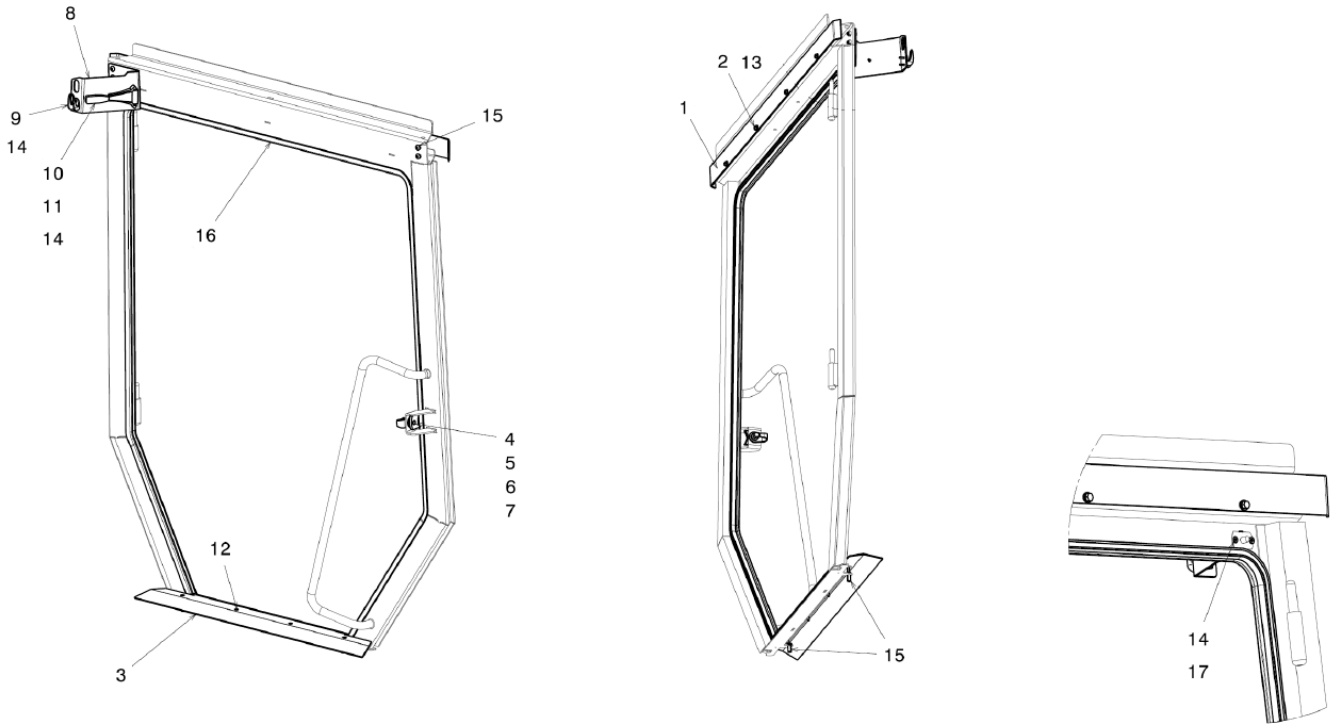

Item	Part No.	Name	Qty	L
1	-	Covering plate	1	
2	-	Threaded rivet	4	
3	-	Plate	1	
4	4700908580	Lock pin	1	
5	4700908583	Bracket	1	
6	4700908581	Washer	1	
7	4700908582	Cover	1	
8	-	Bracket	1	
9	4700908505	Hook	1	
10	4700908506	Emergency hammer	1	
11	4700908507	Emergency hammer, hook	1	
12	-	Screw	4	
13	4700395830	Screw	4	
14	4700938676	Screw	6	
15	-	Screw	6	
16	4700938842	Sealing strip	4,5	
17	-	O-RING	1	

Glasswork door side Glasswork door side

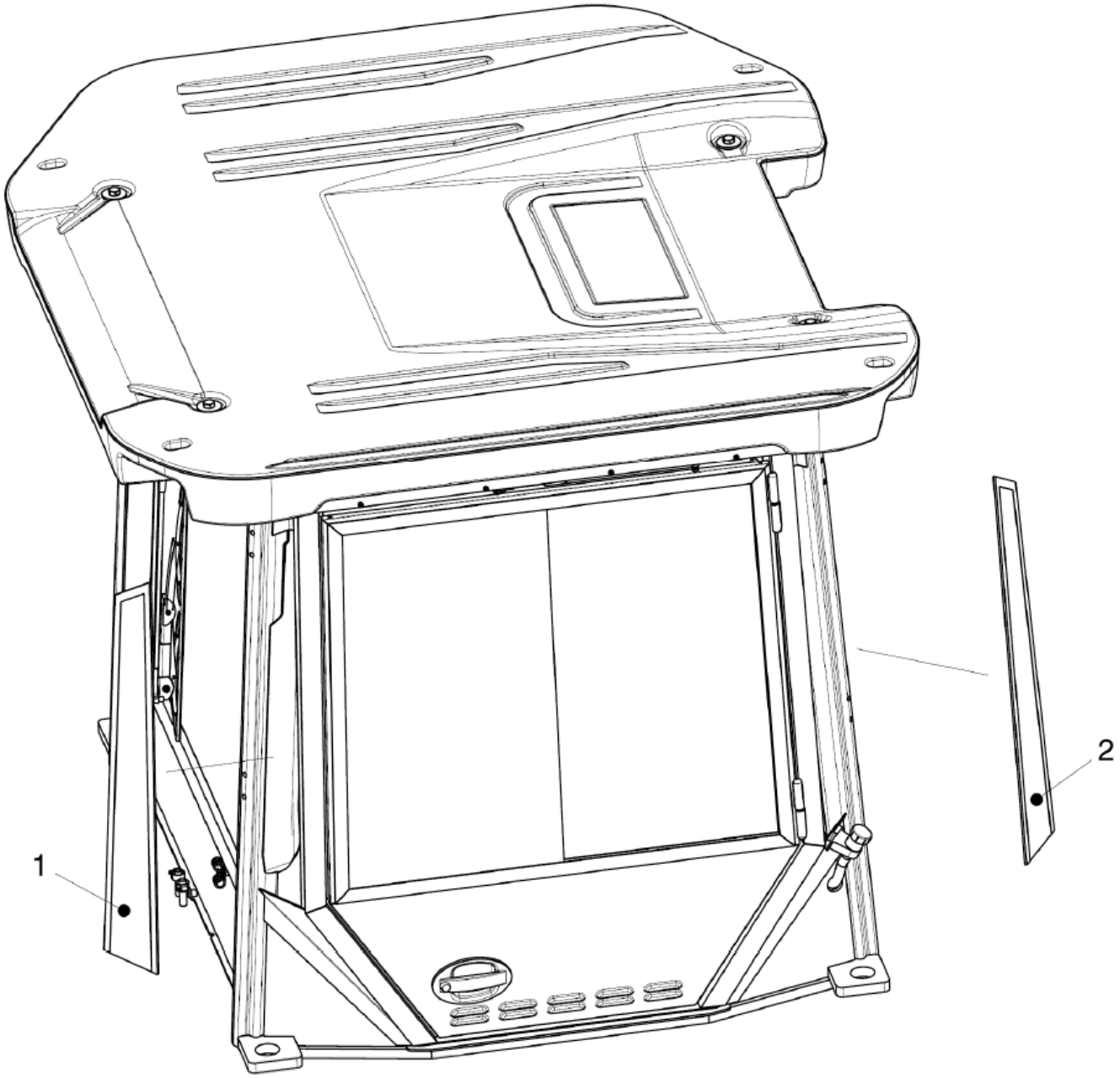

Item	Part No.	Name	Qty	L
1	4700393252	Screen	1	
2	4700393253	Screen	1	

Rear plastics assembly Rear plastics assembly

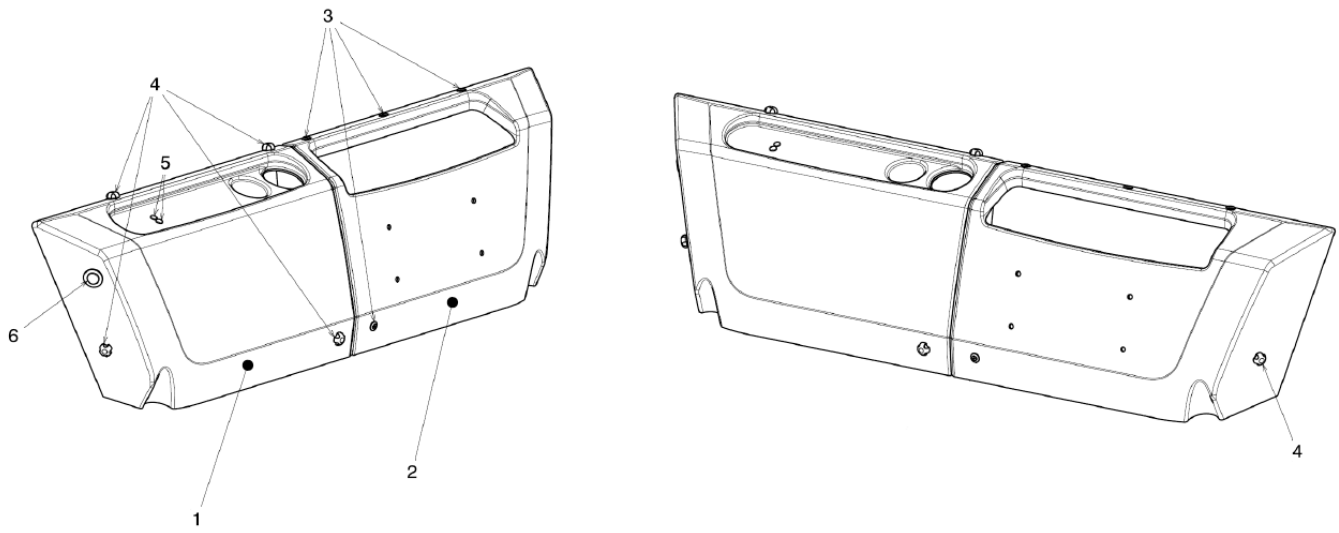

Item	Part No.	Name	Qty	L
1	4812110322	Cover	1	
2	4812110323	Cover	1	
3	4700395785	Expansion rivet	3	
4	4700395786	Knob	6	
5	-	Plug	2	
6	4700395816	Plug socket 24V	1	

Cabin frame Cabin frame

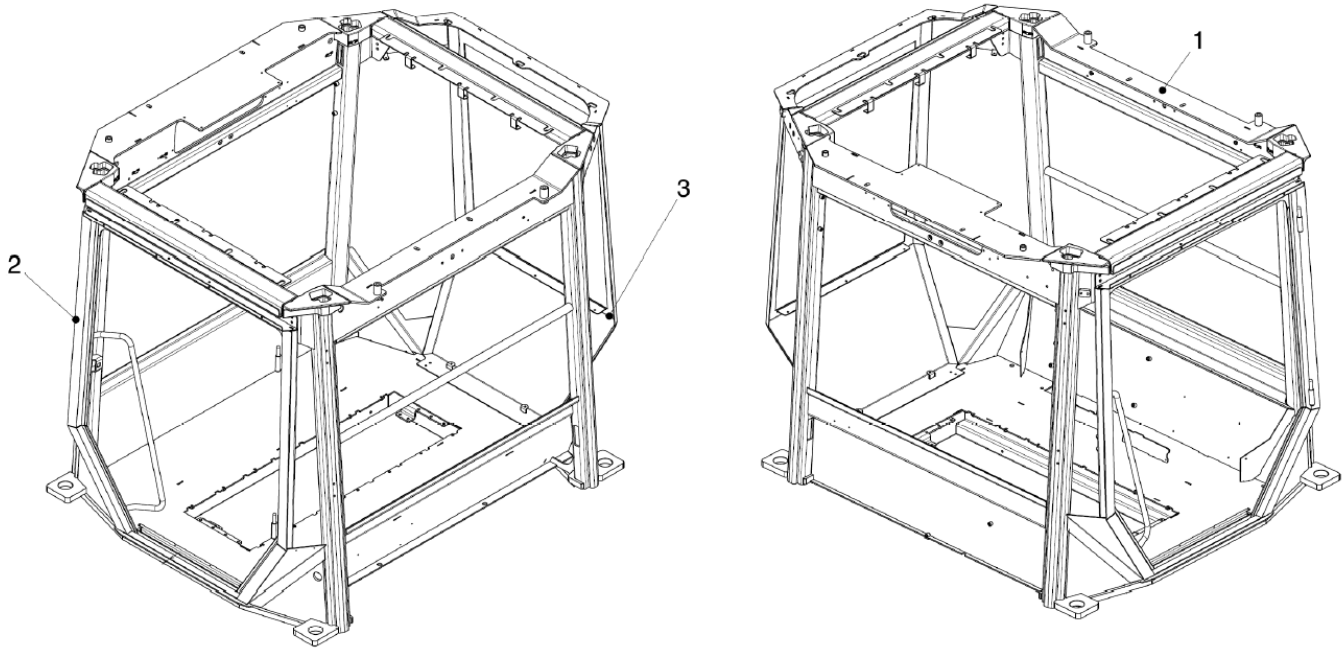

Item	Part No.	Name	Qty	L
1	4700396821	Rops frame	1	
2	4812113375	Oriel frame	1	
3	4812113376	Frame	1	

Glasswork wind screen Glasswork windscreen

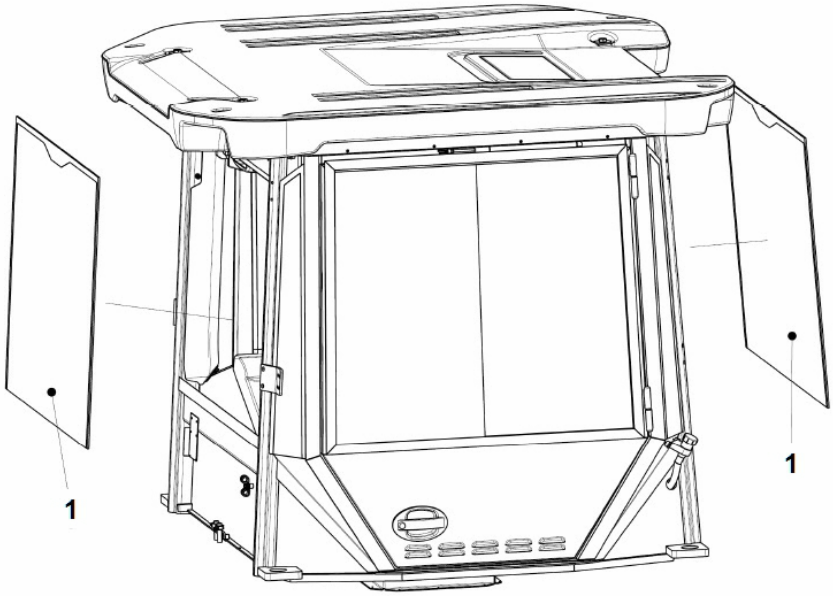

Item	Part No.	Name	Qty	L
1	4700393250	Windscreen	2	

Door assembly Door assembly

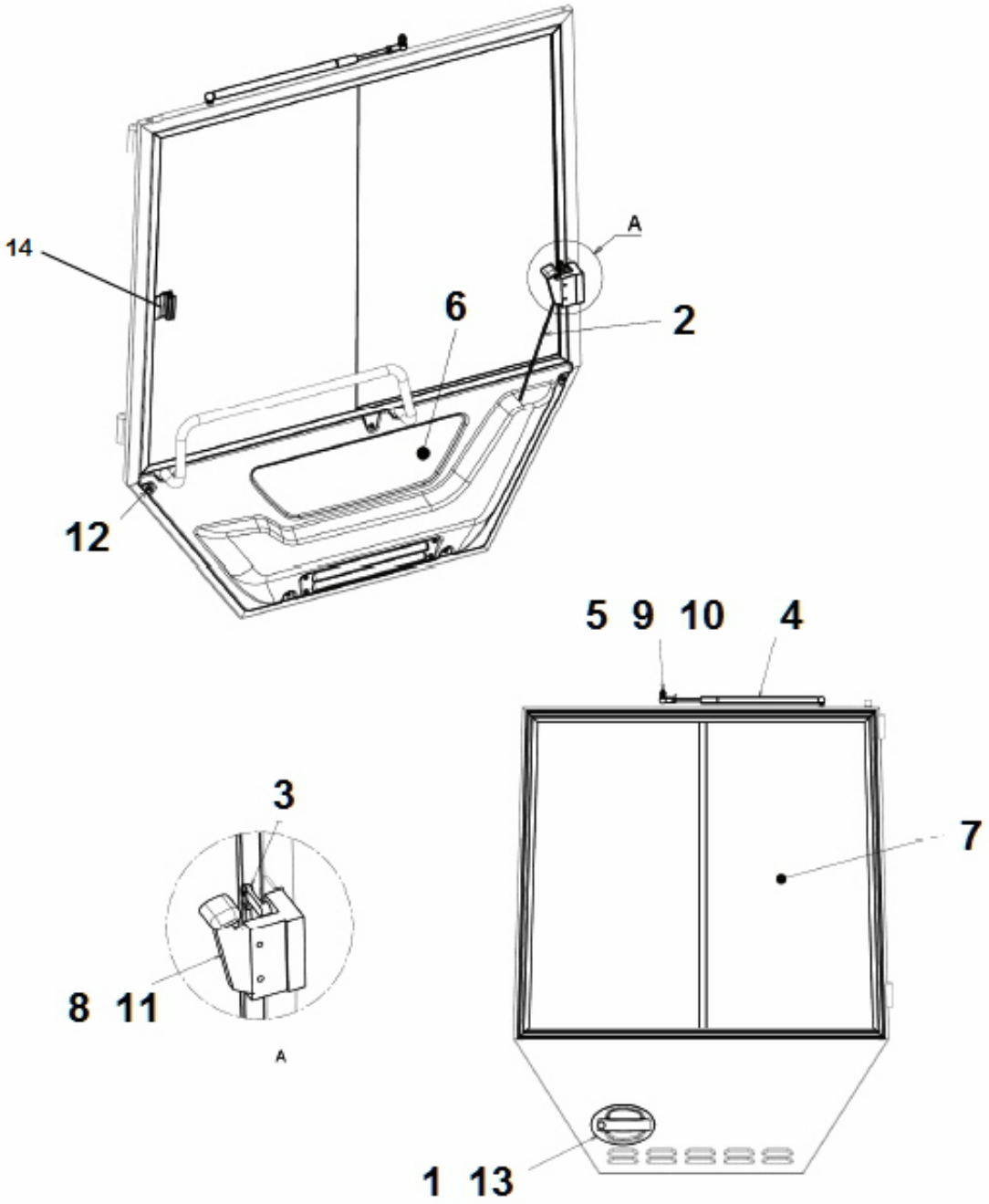

Item	Part No.	Name	Qty	L
1	4700395833	Handle, outer	1	
.1	4700902866	Key Marked "455"	1	
2	4812159096	Connecting rod	1	
3	4812159155	Joint	1	
4	4700908284	Gas spring	1	
5	-	Joint	1	
6		Door panel	1	
7	4812155164	Sliding screen	1	
8	4700395834	Handle, inner	1	
9	-	Nut	1	
10	-	Lock nut	1	
11	4812159157	Socket screw	2	
12	-	Screw	5	
13	-	Screw	3	
14	4812317475	Window latch	1	

General installation accessories General installation accessories

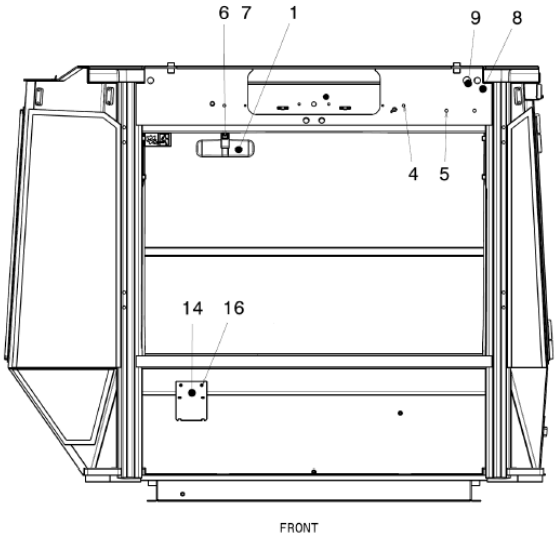

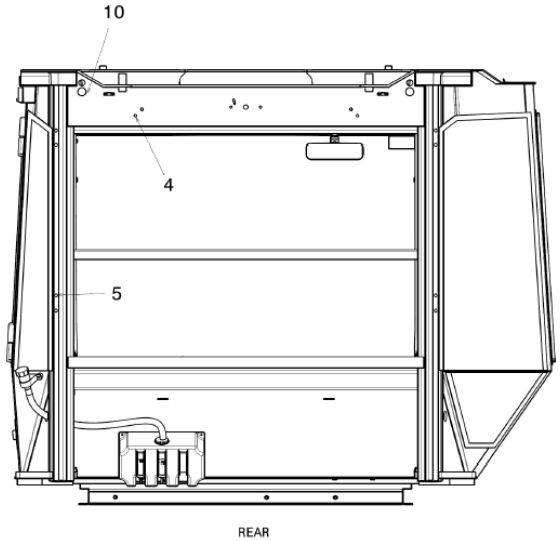

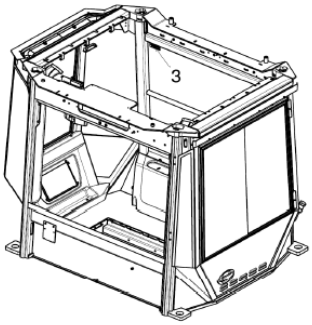

Item	Part No.	Name	Qty	L
1	4700395792	Rear view mirror	1	
3	4700935589	Decal	1	
3	4700903590	Decal emergency exit	1	
4	4700926215	Protective plug	6	
5	-	Plug	18	
6	4812159157	Socket screw	1	
7	4812157763	Nut cap	1	
8	-	Plug	1	
9	-	Plug	1	
10	-	Plug	2	
14	4812110609	Mounting plate	1	
16	-	Screw	2	

Electric assembly Cab, electrics

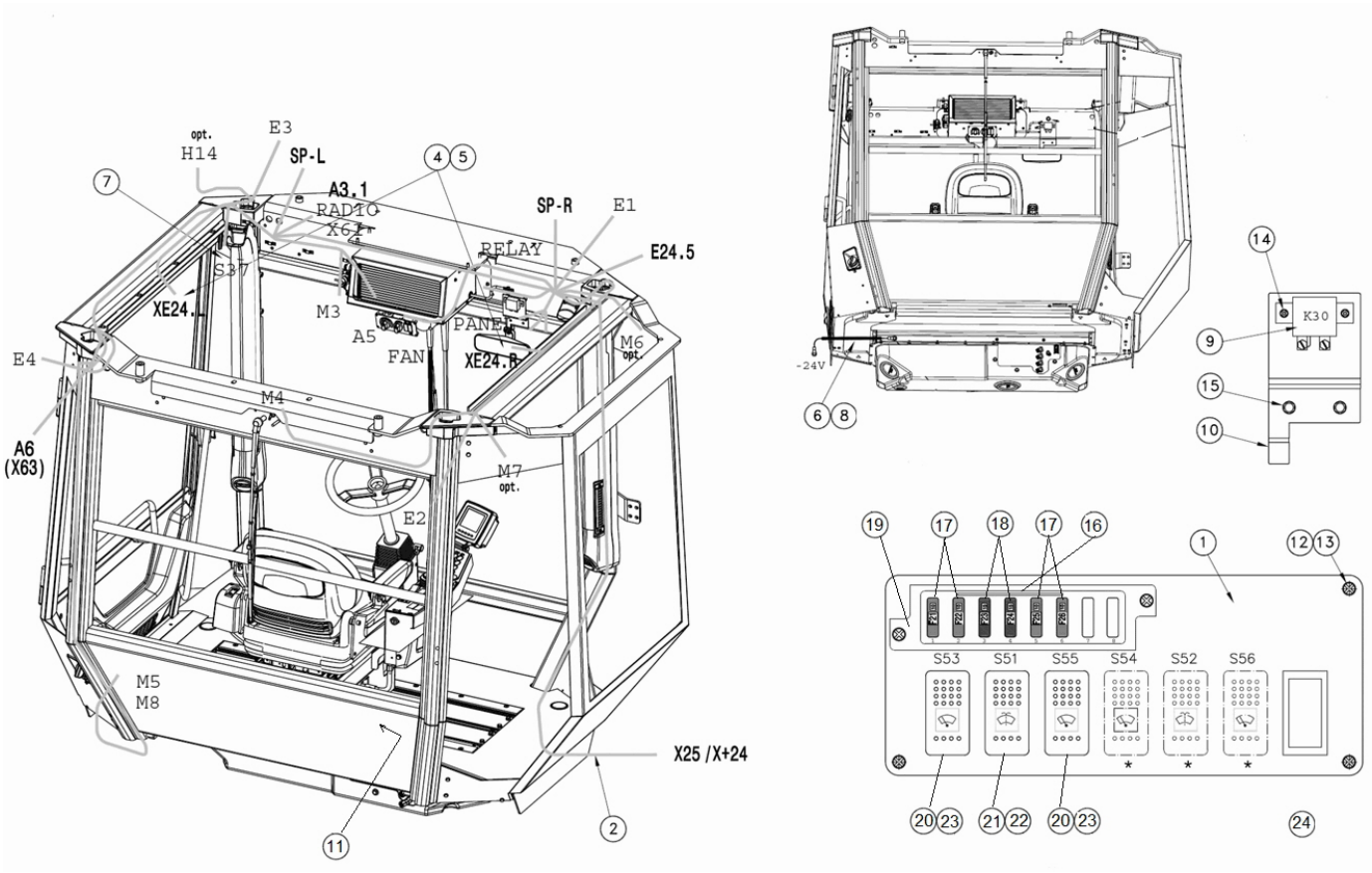

Item	Part No.	Name	Qty	L
1	-	Control panel plate	1	
2	-	Cable harness	1	
4	4700395800	Interior light	2	
5	4700792715	Bulb, 10W	2	
6	-	Screw	1	
7	4700908500	Door switch	1	
8	4700395799	Cable harness	1	
9	4700792309	Relay	1	
10	-	Mounting plate	1	
11	4700395816	Plug socket 24V	1	
12	4812157188	Rubber nut	5	
13	4812157189	Screw	5	
14	-	Screw	2	
15	-	Screw	2	
16	4700791211	Contact bridge	4	
17	4700901227	Fuse 10A Red	4	
18	4700901228	Fuse, 15A Blue	2	
19	4700791185	Fuse box	1	
20	-	Button	2	
21	-	Button	1	
22	4700792504	Switch	1	A
23	4700792505	Switch, Windshield washer	2	B
24	4700791588	Panel plug	4	

Comments for Page: Cab, electrics

(L)OCAL REMARKS

A | en_US | Windshield washer

B | en_US | Windshield wiper

Windscreen wipersystem Windscreen wipersystem

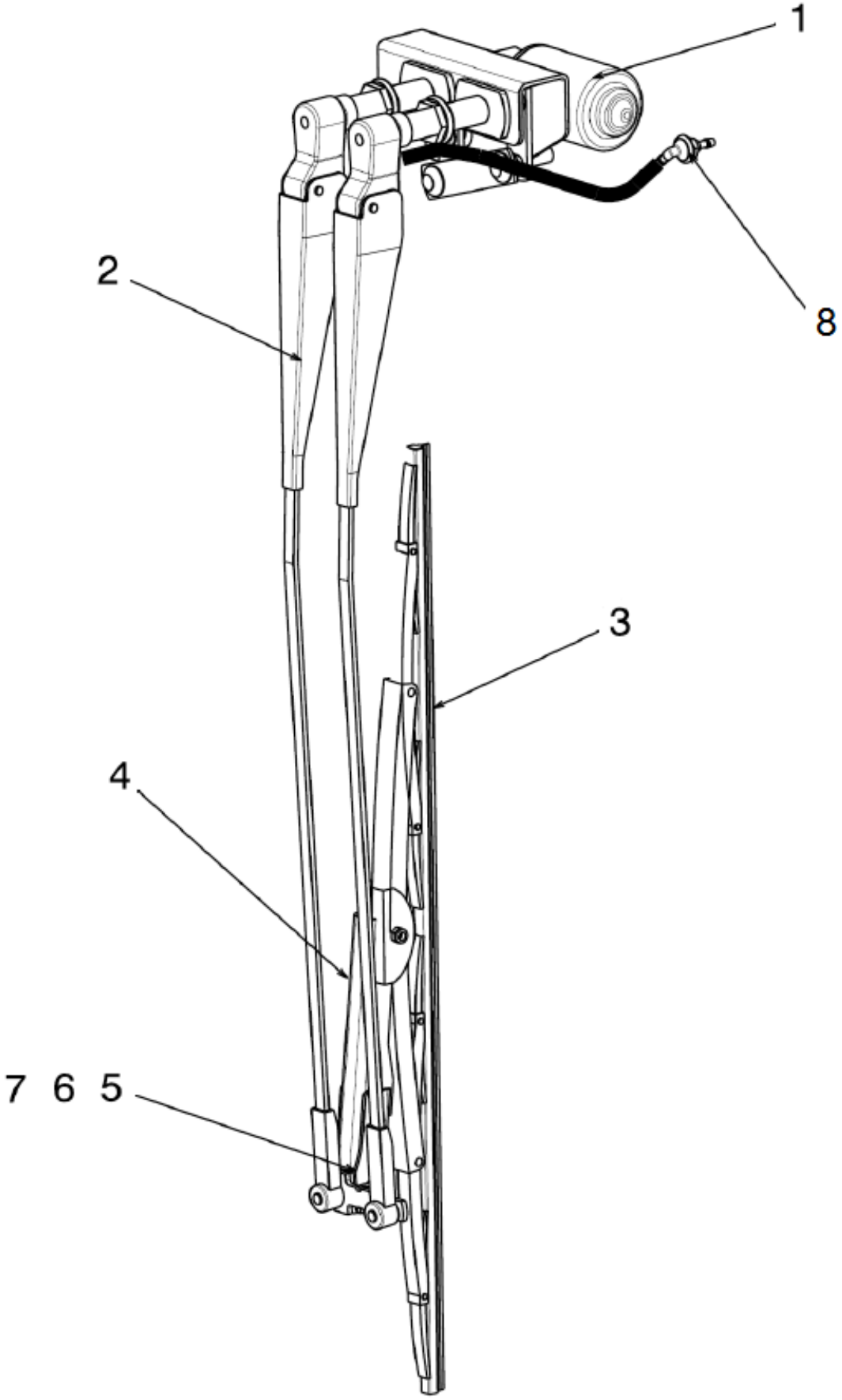

Item	Part No.	Name	Qty	L
1	4700395810	Wiper motor	1	
2	4700395811	Wiper arm	1	
3	4700905306	Wiper blade	1	
4	4700395796	Mounting plate	1	
5	4700508021	Screw, M8 x 50 mm 8.8 A2K	1	
6	4700904229	Washer, 8.4x16x1.5 mm 300 HV	1	
7	4700586003	Hexagon lock nut M8	1	
8	4700908561	Grommet	1	

Rear glass wiper Rear glass wiper set

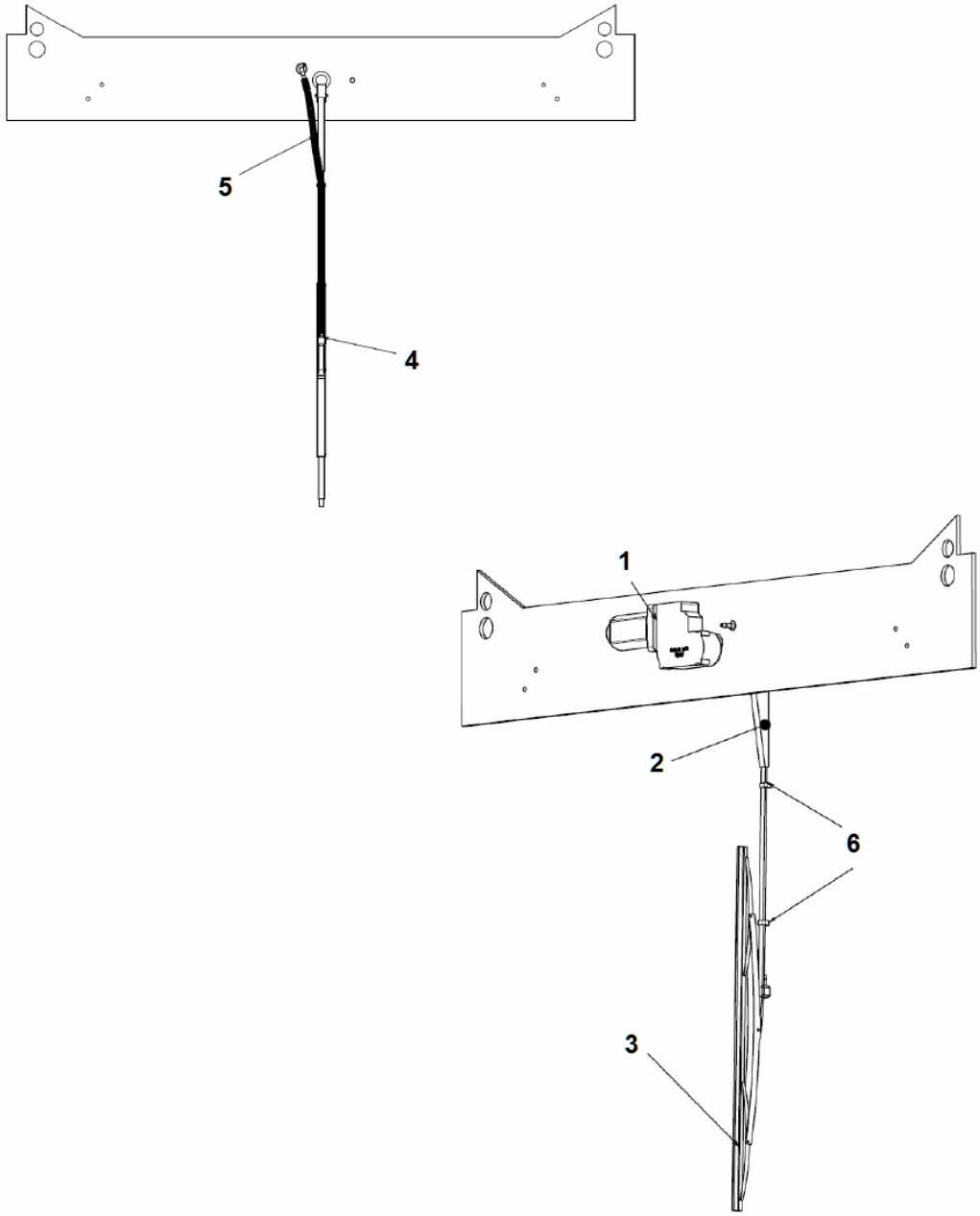

Item	Part No.	Name	Qty	L
1	4700945897	Wiper motor	1	
2	4700395713	Arm	1	
3	4700395814	Wiper blade	1	
4	4700938256	Nozzle	1	
5	-	Hose	1XL	A
6	-	Fasterner for rubber hose	2	

Comments for Page: Rear glass wiper set

(L)OCAL REMARKS

A | en_US | L = 0,6 m

Washer equipments Washer equipments

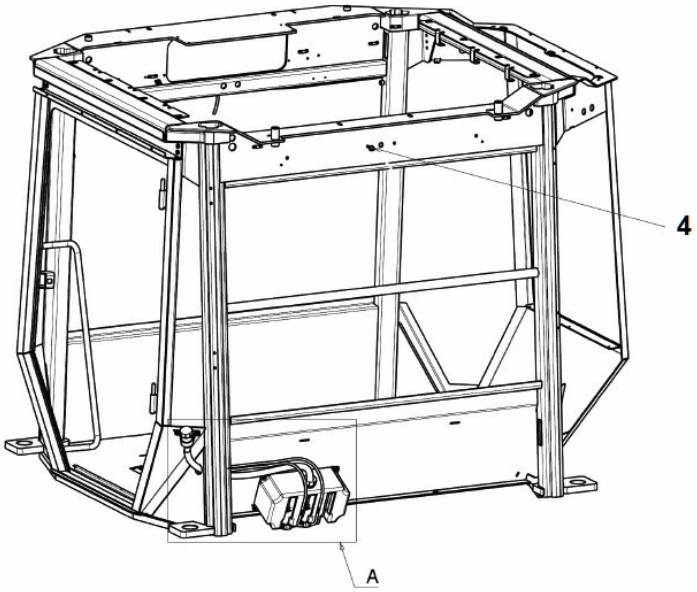

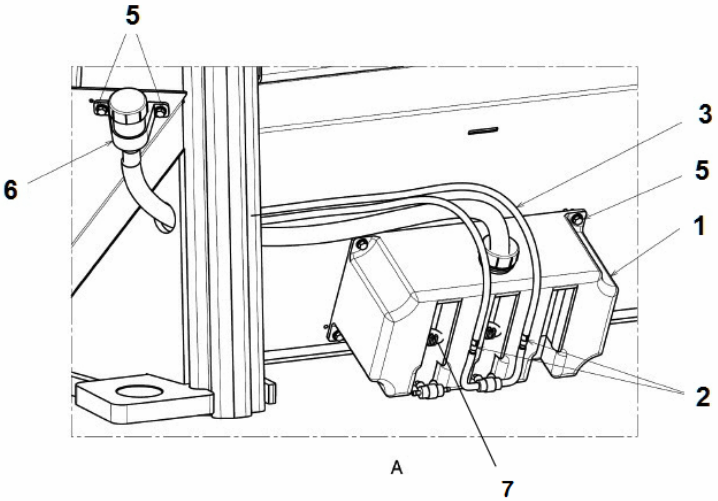

Item	Part No.	Name	Qty	L
1	4812317244	Tank asssembly	1	
2	4700908564	Check valve	2	
3	4700908563	Plastic hose	1XL	A
4	4700908561	Grommet	2	
5	4700395830	Screw	6	
6	4812110619	Filling pipe	1	
7	4812110618	Water pump	2	

Comments for Page: Washer equipments

(L)OCAL REMARKS

A | en_US | L = 12 m

Assembly heater unit Heater mount

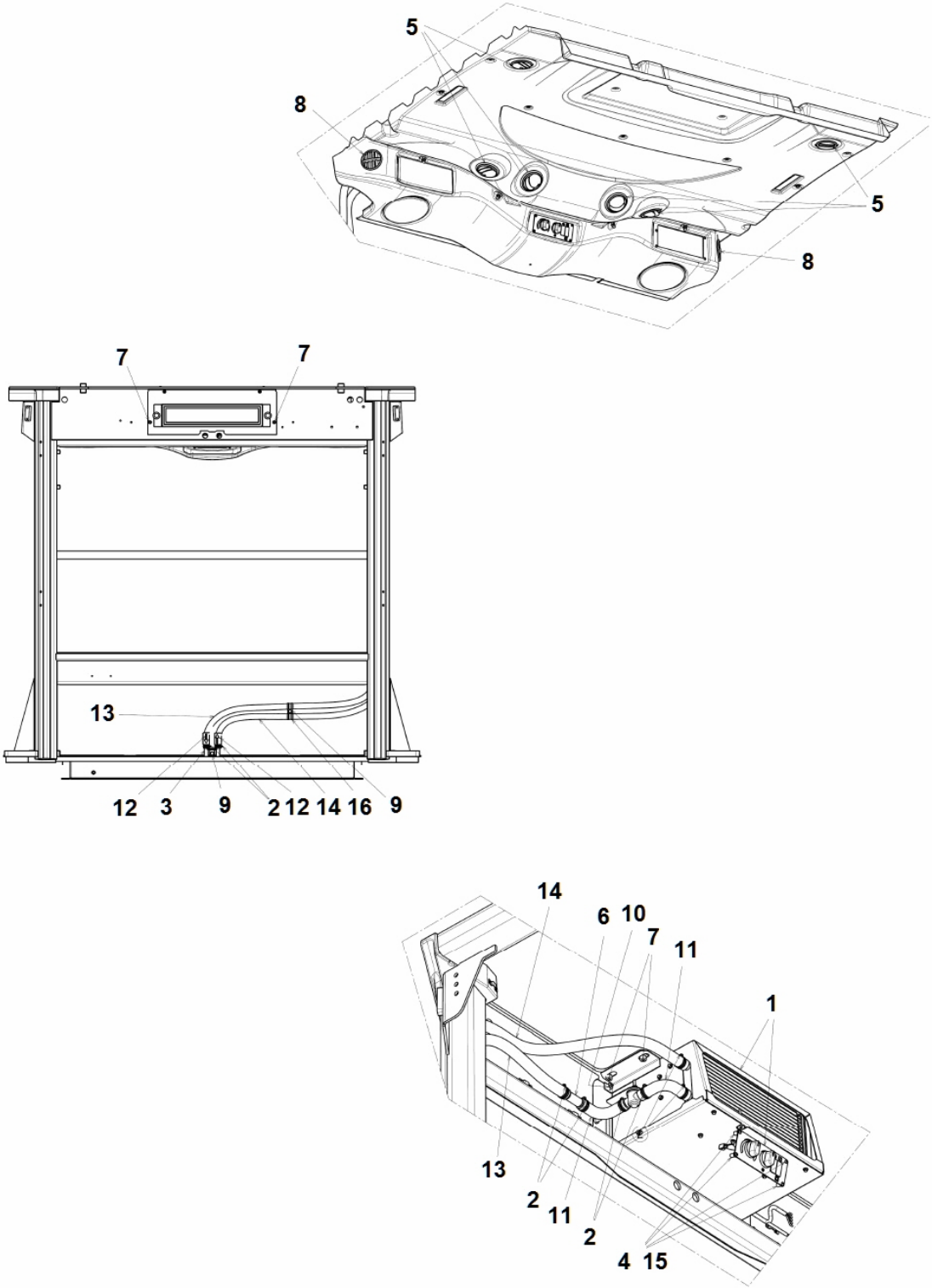

Item	Part No.	Name	Qty	L
1	4700393617	Heater	1	
2	4812155992	Hose clamp	8	
3	-	Hose holder	1	
4	-	Rubber nut	4	
5	4700395757	Air nozzle	6	
6	-	Connector tube	1	
7	-	Screw	6	
8	4700395759	Air nozzle	2	
9	-	Screw	2	
10	-	Socket screw	2	
11	-	Hose elbow	2	
12	-	making tape	2	
13	-	Hose	1	
14	-	Hose	1	
15	-	Socket screw	4	
16	-	Pipe clamp	2	

Heater Heater

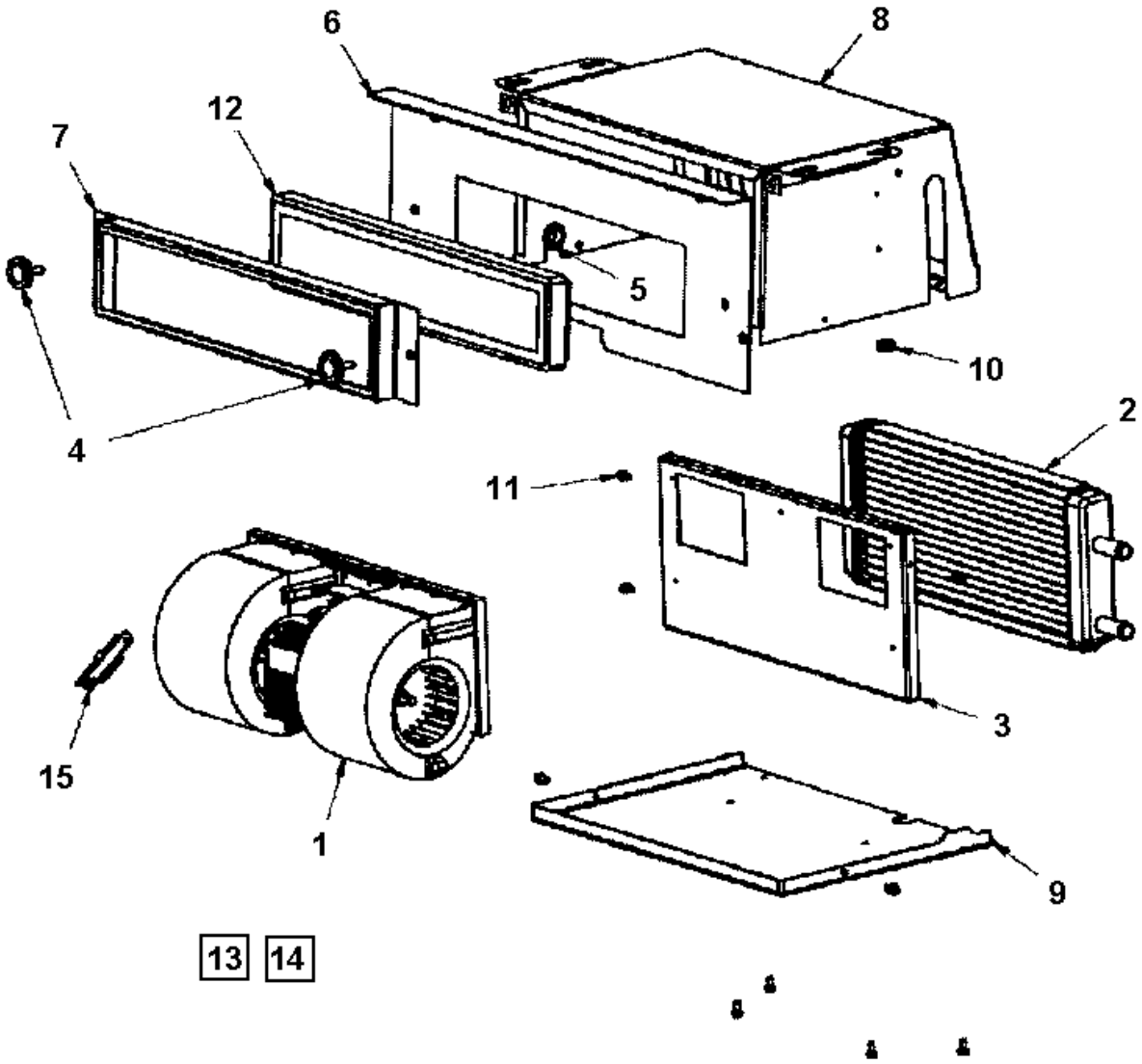

Item	Part No.	Name	Qty	L
1	4700395761	Blower 24V	1	
2	4700395762	Heater coil	1	
3	-	Blower bracket	1	
4	4700395774	Knob	2	
5	4700938609	Grommet	1	
6	-	Front plate	1	
7	4700395775	Filter bracket	1	
8	-	Casing	1	
9	-	Cover plate	1	
10	-	Grommet	1	
11	-	Screw M5x10	11	
12	4700395818	Filter	1	
13	4700395819	Cable harness	1	
14	4700395828	Panel cable	1	
15	4700395820	Resistor assy	1	

Heater Heater controls

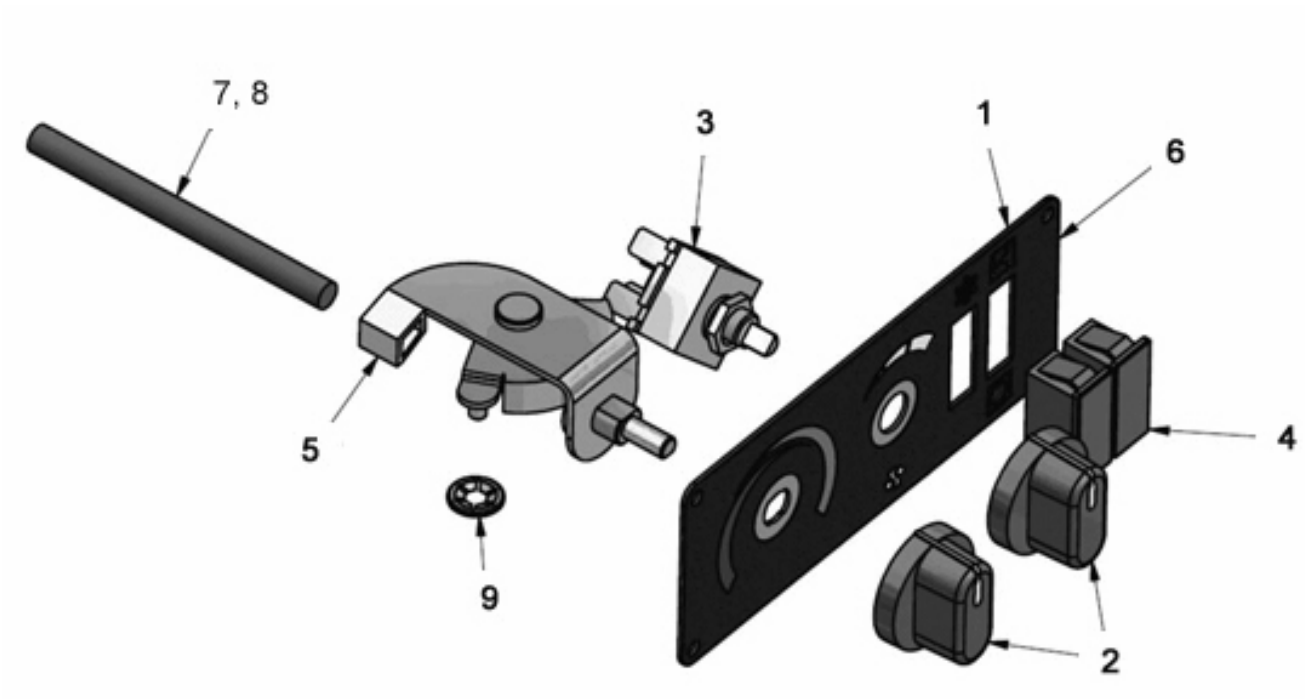

Item	Part No.	Name	Qty	L
1	-	Panel plate	1	
2	4700377508	Knob	2	
3	4700938622	Switch	1	
4	-	Cover	2	
5	4700377507	Rotary control	1	
6	-	Overlay	1	
7	4700395841	Wire clips	1	
8	4700395842	Wire	1	
9	4700395843	Lock washer	2	

Air channel assy Air channel assy

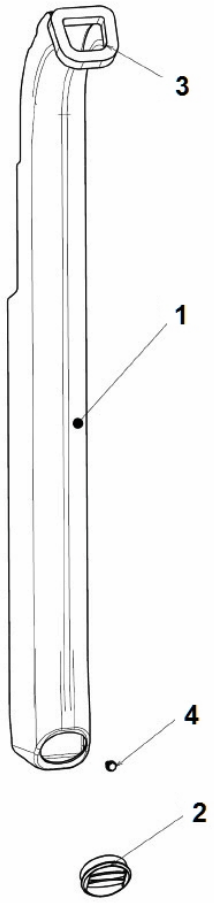

Item	Part No.	Name	Qty	L
1	-	Air gate	1	
2	4700395832	Air nozzle	1	
3	-	SEAL	1	
4	4700395830	Screw	1	

Mounting right side Protective frame asymmetric

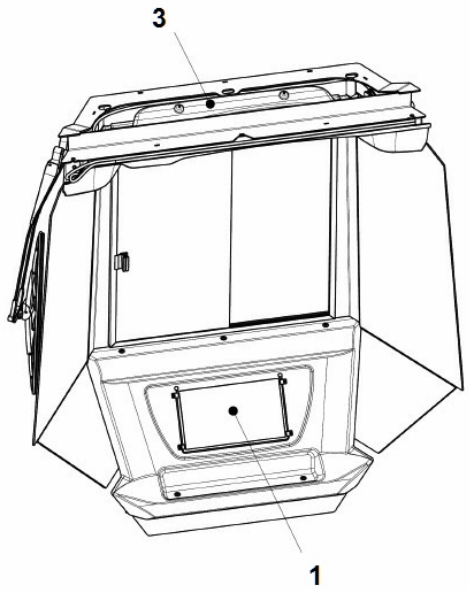

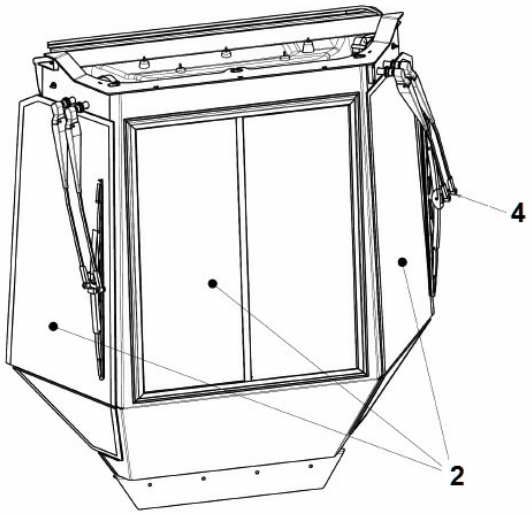

Item	Part No.	Name	Qty	L
1	4812113401	Panel assembly	1	
2	4812110600	Glasswork right	1	
3	4812113402	Blanket assembly	1	
4	4812113389	Wiper system	1	

Cover assy, right side Cover assy, right side

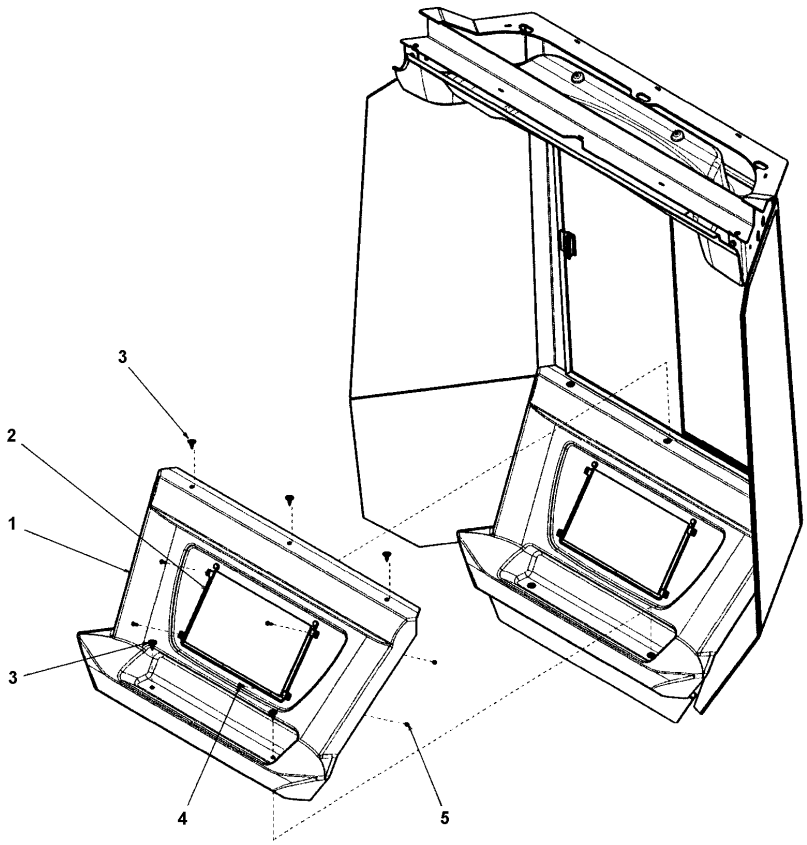

Item	Part No.	Name	Qty	L
1	-	Plastic part	1	
2	-	Document pocket	1	
3	-	Fastener	5	
4	-	Screw	4	
5	-	Nut	4	

Glasswork right side Glasswork right side

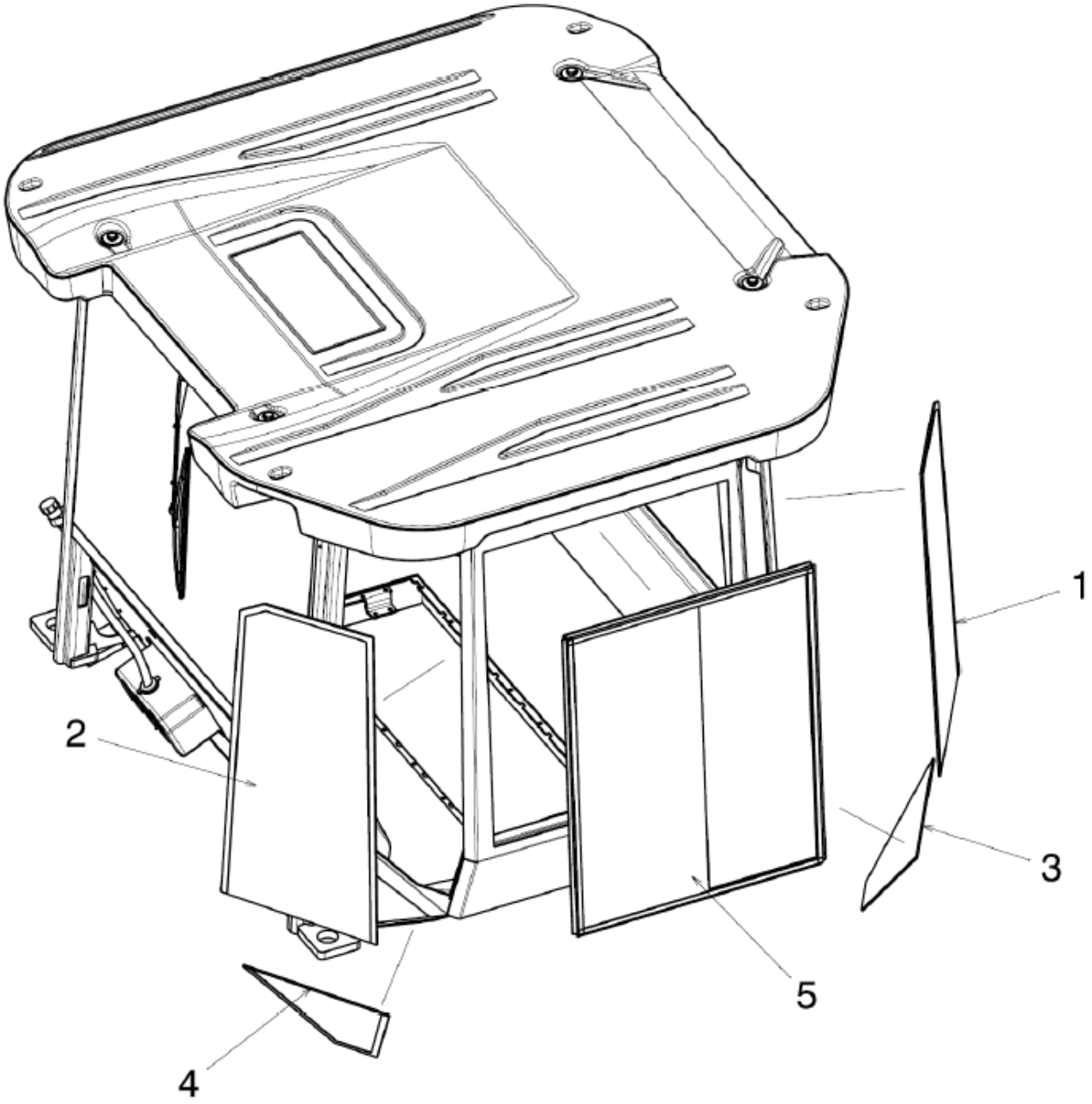

Item	Part No.	Name	Qty	L
1	4700396955	Screen	1	
2	4700396956	Screen	1	
3	4700396957	Screen	1	
4	4700396958	Screen	1	
5	4700395790	Sliding screen	1	

Wiper system right side Wiper system right side

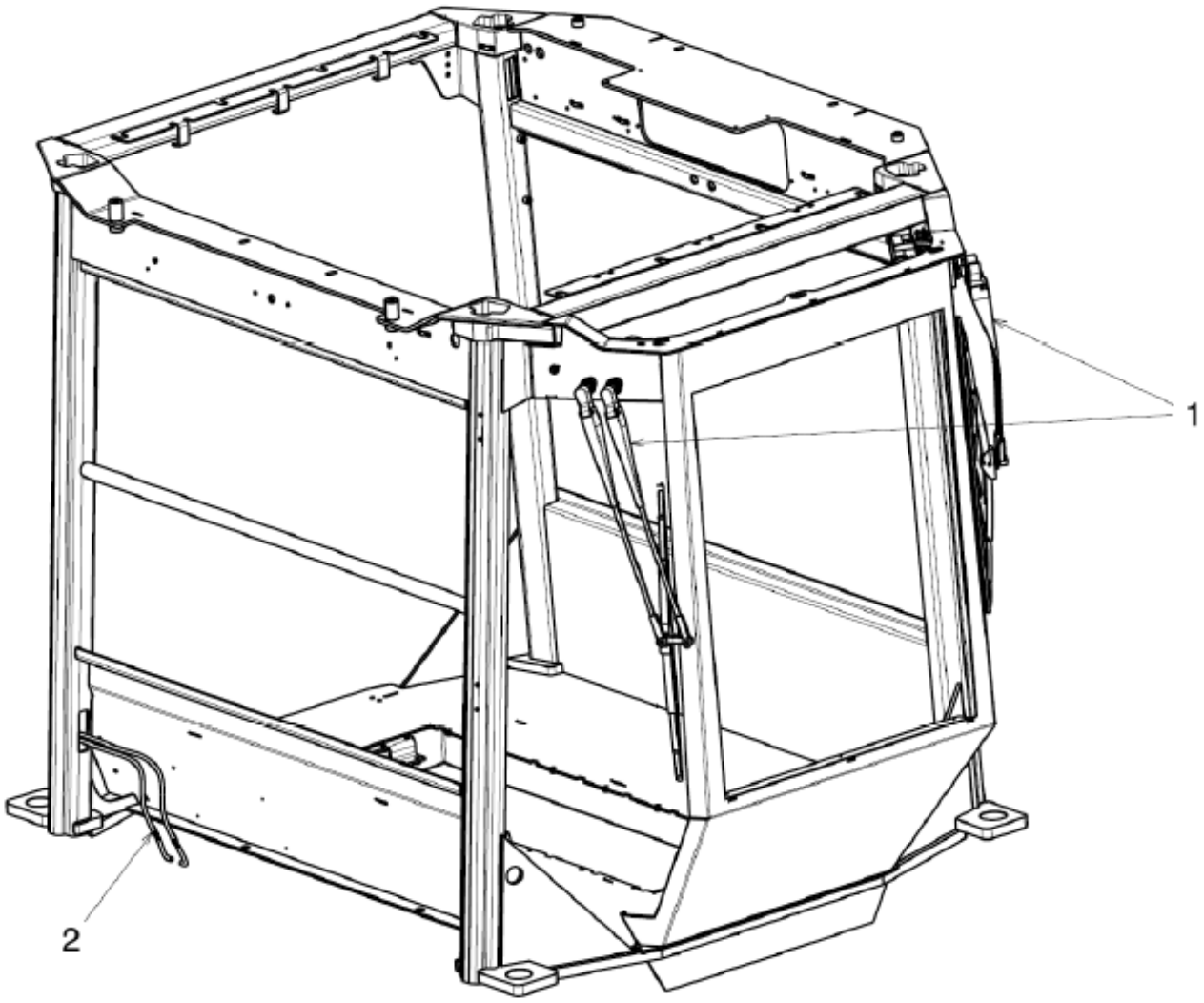

Item	Part No.	Name	Qty	L
1	4812113391	Wiper assy assymetric side	2	
2	4812113390	Windshield washer reservoir assy	1	

Windshield wiper, assymetric side Windshield wiper, assymetric side

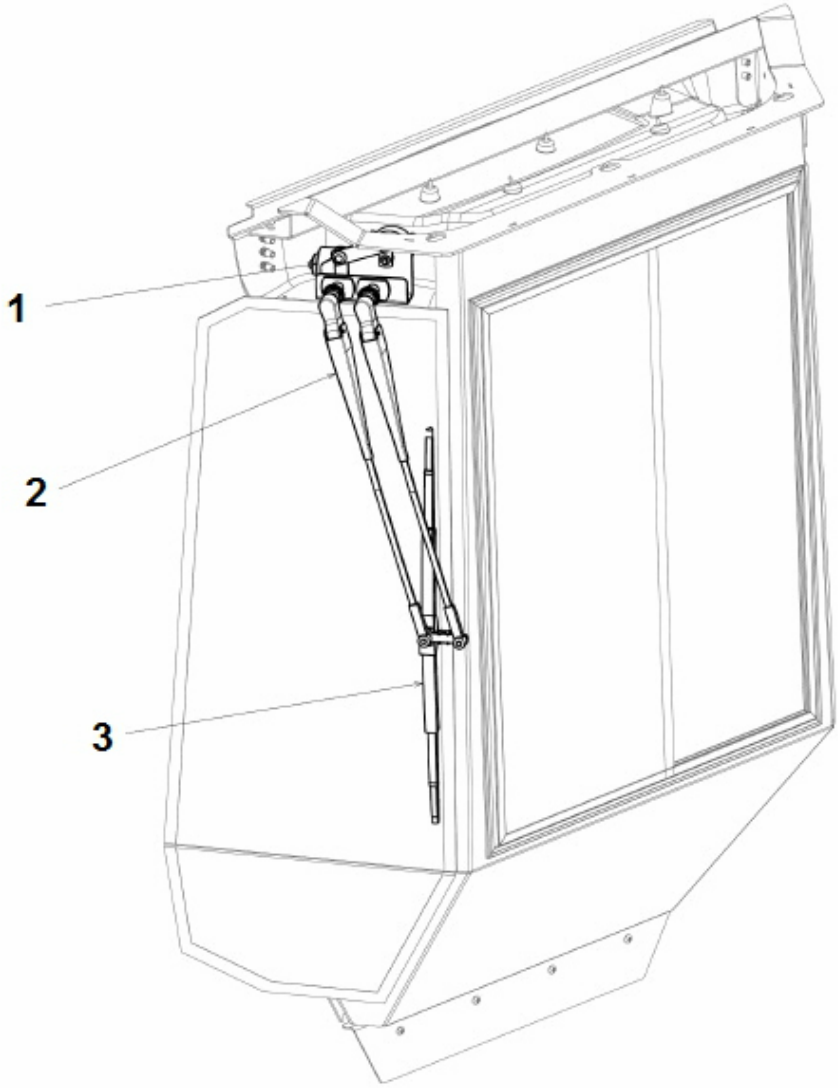

Item	Part No.	Name	Qty	L
1	4812158895	Wiper motor	1	
2	4812158099	Wiper arm	1	
3	4700905306	Wiper blade	1	

Windshield washer reservoir assy Windshield washer reservoir assy

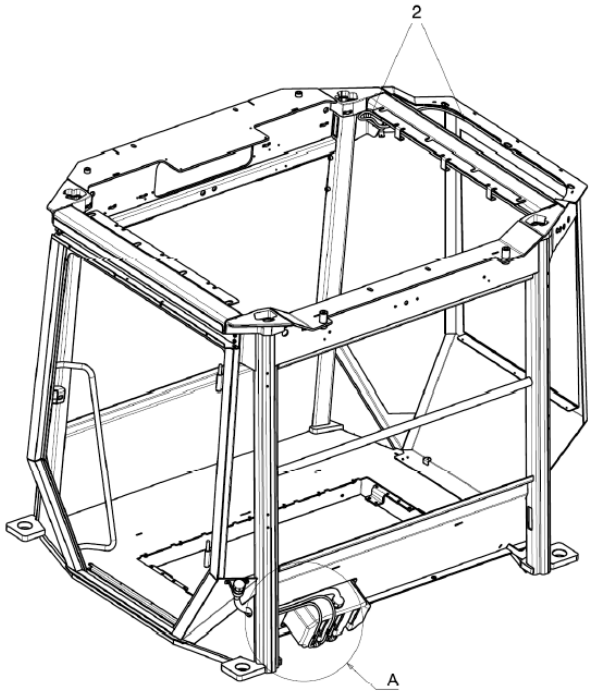

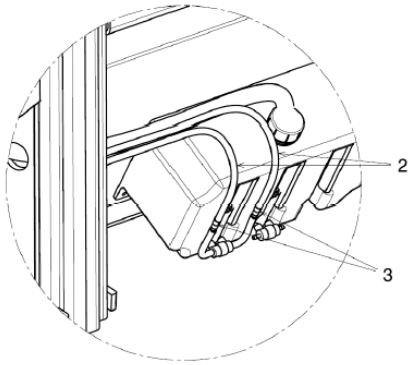

Detail A

Item	Part No.	Name	Qty	L
1	4700908561	Grommet	2	
2	4700908563	Plastic hose	10	
3	4700908564	Check valve	2	

Fastner kit, right side ceiling Fastener kit, right side ceiling

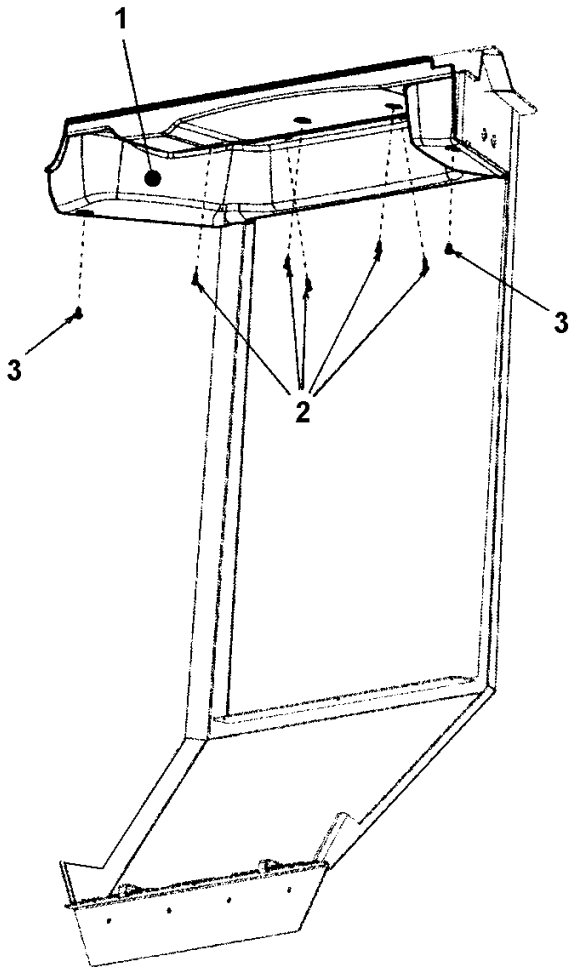

Item	Part No.	Name	Qty	L
1	-	Right side ceiling	1	
2	4700395829	Screw	5	
3	4700923934	Screw	2	

Manual box Manual box

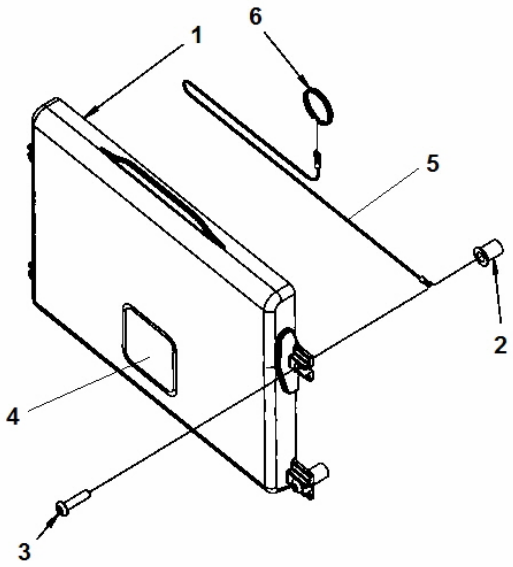

Item	Part No.	Name	Qty	L
1	4700383705	Instruction manual box	1	
2	4700792536	Rubber nut	4	
3	4700792589	Screw	4	
4	4700903425	Safety decal "READ SAFETY INSTRUCTIONS"	1	
5	4700384584	Wire	1	
6	4700358254	Key-ring	1	

4812101273 Rops 4812101273 Rops

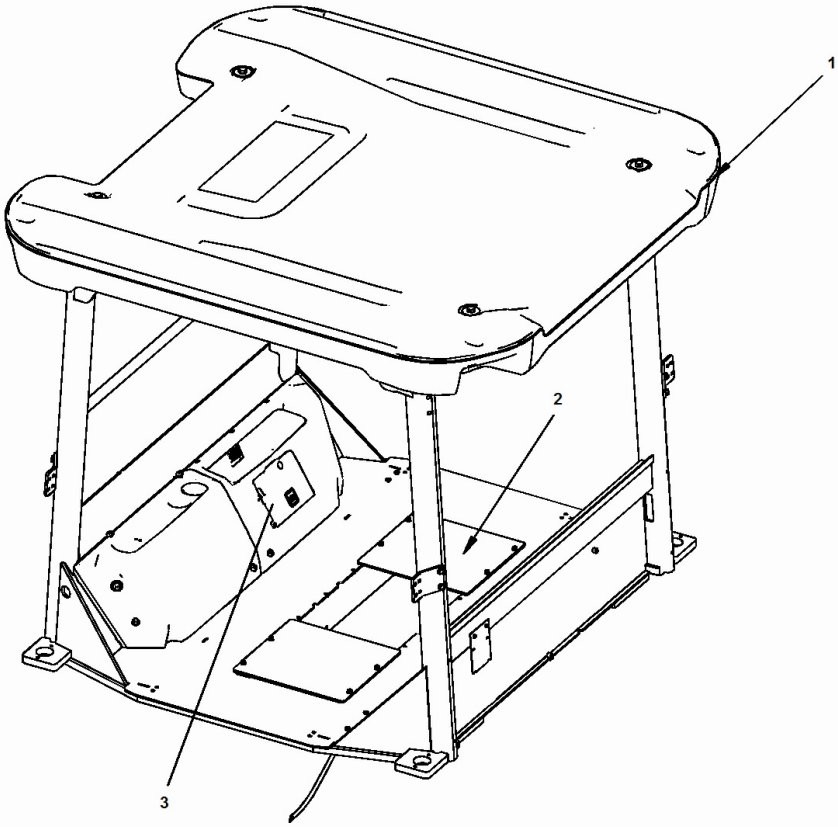

Item	Part No.	Name	Qty	L
1	4812101643	Rops, platform	1	
2	4812101243	Cover module	2	
3	4700394119	Manual box	1	

Referenced Pages

Manual box 213
4812101243 Cover module 157

4812100910 Suspension assembly 4812100910 Suspension assembly

This page intentionally left blank

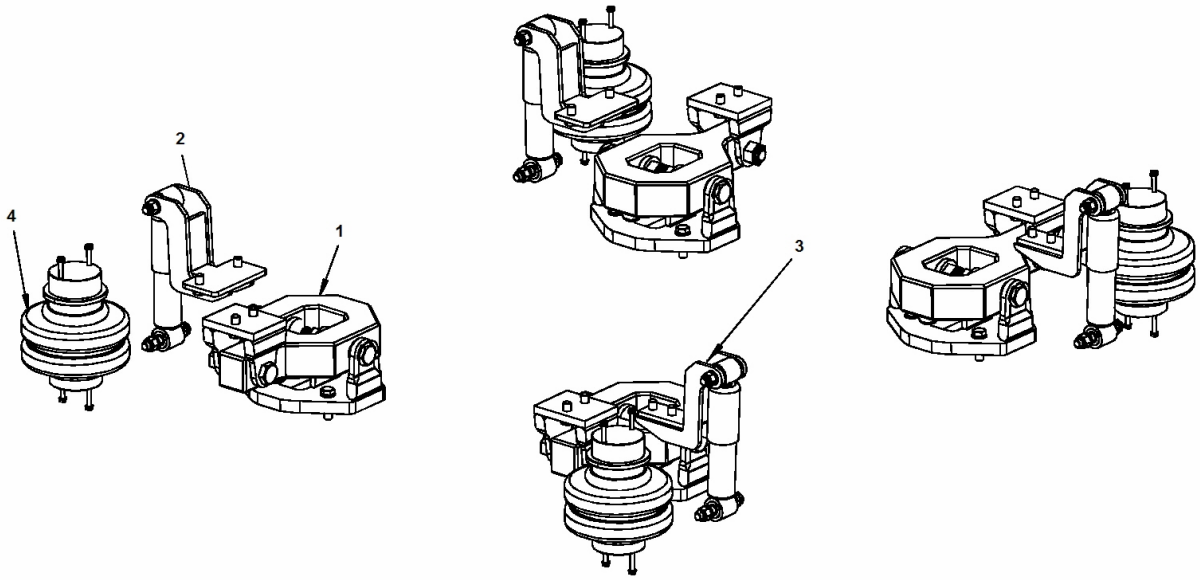
2
4
1
3

Item	Part No.	Name	Qty	L
1	4812100523	Cushions Module	4	
2	4812101676	Damper Module	2	
3	4812101677	Damper Module	2	
4	4812100964	Pneumatic Spring Module	4	

4812100910 Suspension assembly 4812100964 Pneumatic Spring Module

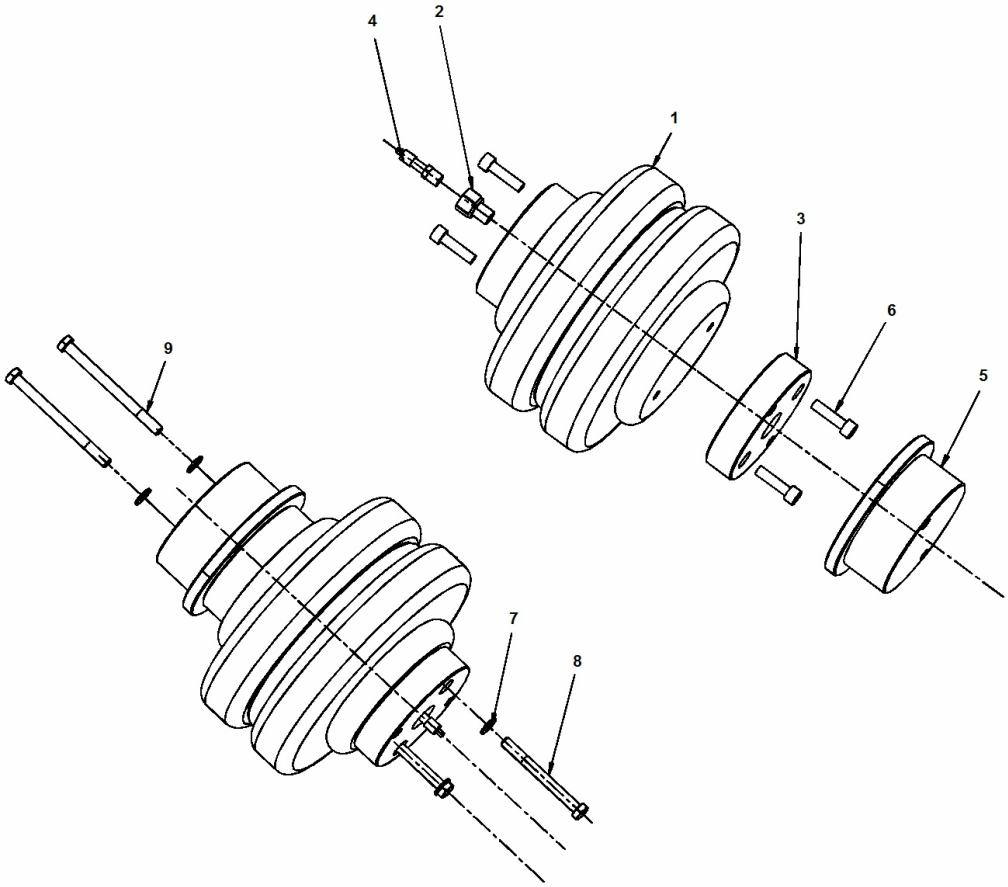

Item	Part No.	Name	Qty	L
1	4812100900	Pneumatic Spring	1	
2	4812101729	Adapter	1	
3	4812101694	Spacer	2	
4	4700401106	Filler Pipe	1	
5	4812100537	Shim	1	
6	4700508019	Cylinder screw	4	
7	4700904229	Washer, 8.4x16x1.5 mm 300 HV	4	
8	4700500189	Screw	2	
9	4700500096	Screw	2	

4812100910 Suspension assembly 4812101677 Damper Module

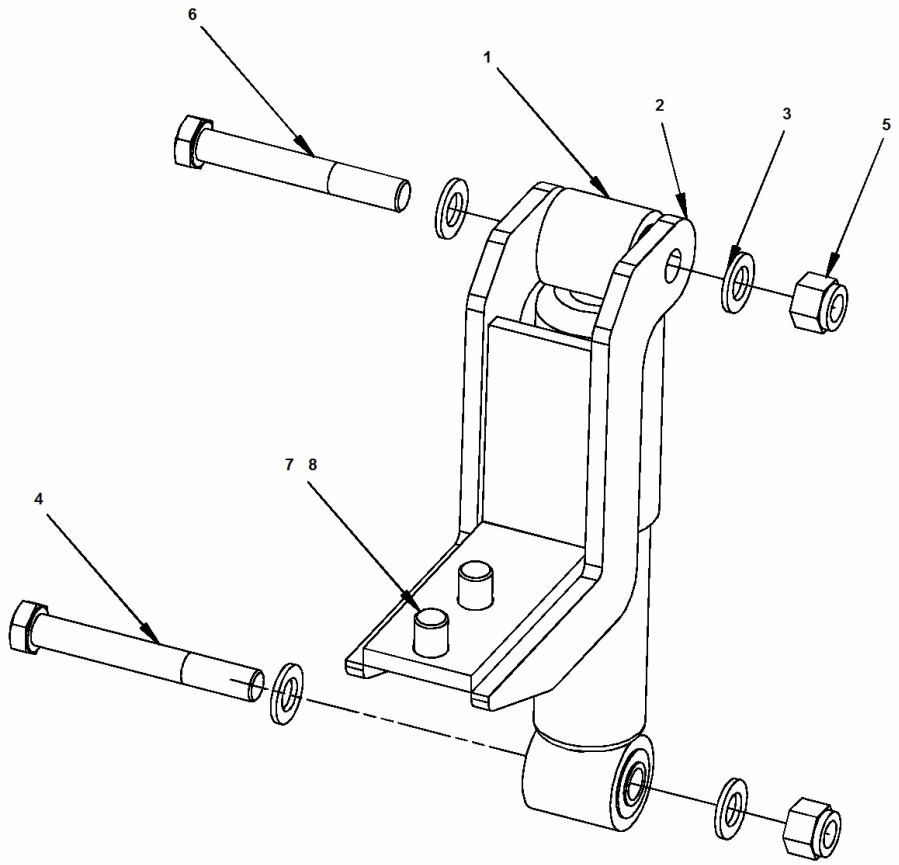

Item	Part No.	Name	Qty	L
1	4812101100	Damper	1	
2	4812101671	Bracket	1	
3	4700904232	Steel plain washer	4	
4	4700500142	Screw	1	
5	4700586021	Lock nut	2	
6	4700500199	Screw	1	
7	4700904232	Steel plain washer	2	
8	4700500057	Screw	2	

4812100910 Suspension assembly 4812101676 Damper Module

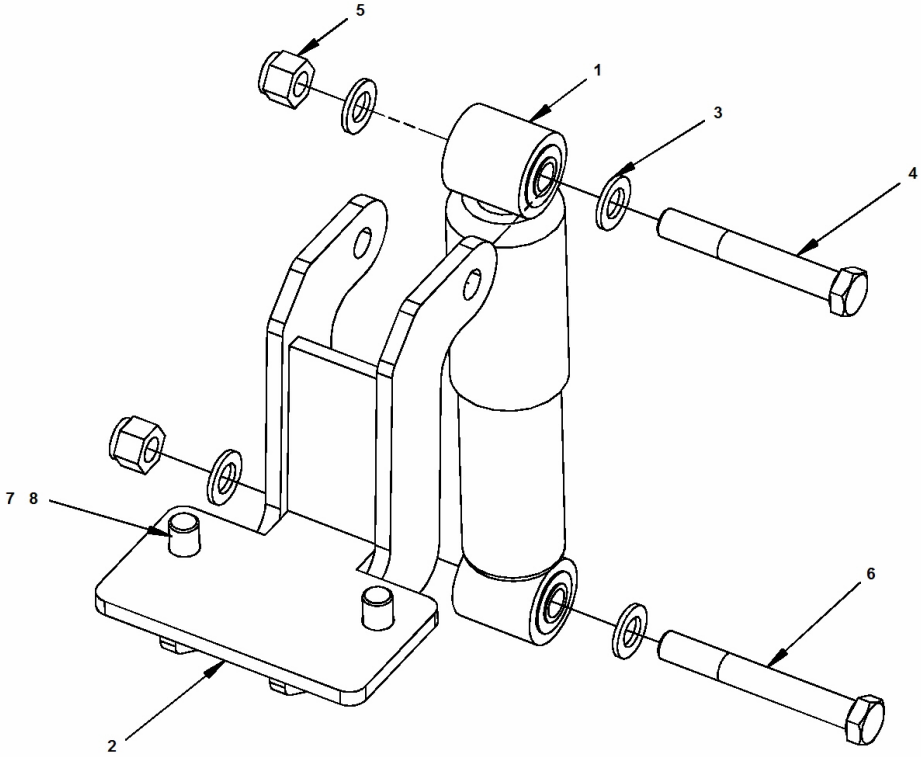

Item	Part No.	Name	Qty	L
1	4812101100	Damper	1	
2	4812101672	Bracket	1	
3	4700904232	Steel plain washer	4	
4	4700500199	Screw	1	
5	4700586021	Lock nut	2	
6	4700500142	Screw	1	
7	4700904232	Steel plain washer	2	
8	4700500057	Screw	2	

4812100910 Suspension assembly 4812100523 Cushions Module

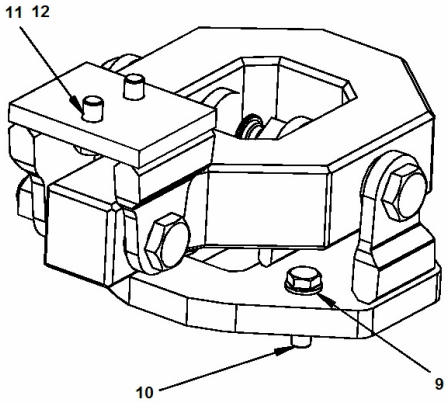

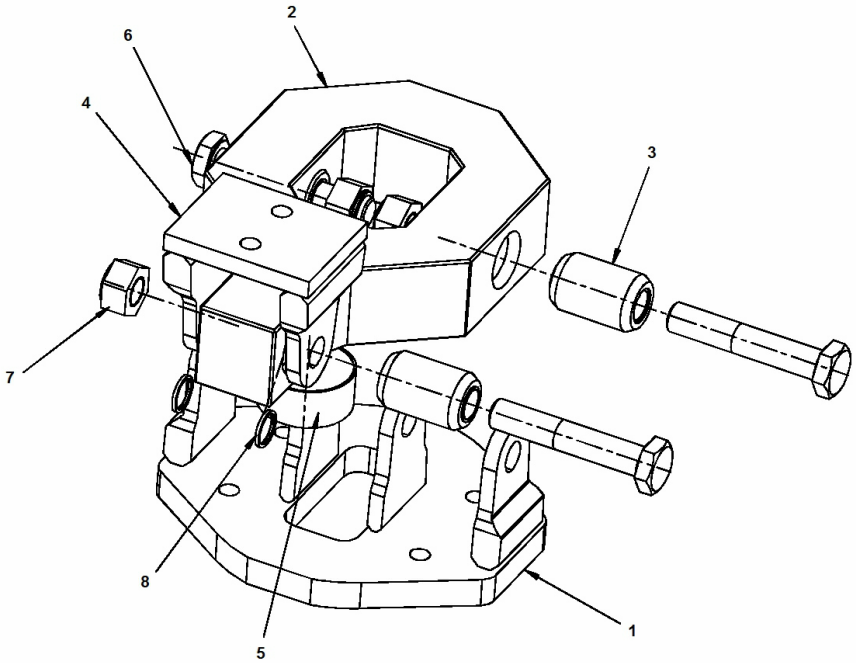

Item	Part No.	Name	Qty	L
1	4812100525	Bracket	1	
2	4812101335	Suspension bar	1	
3	4812101047	Bushing	3	
4	4812100613	Bracket	1	
5	4812101869	Rubber	2	
6	4700502127	Screw	3	
7	4700571008	Nut	3	
8	4812100663	Shim	6	
9	4700904232	Steel plain washer	6	
10	4700500076	Screw M16x55	4	
11	4700500093	Hex. screw	2	
12	4700603004	Washer	2	

4812100582 Seat frame bracket 4812100582 Seat frame bracket

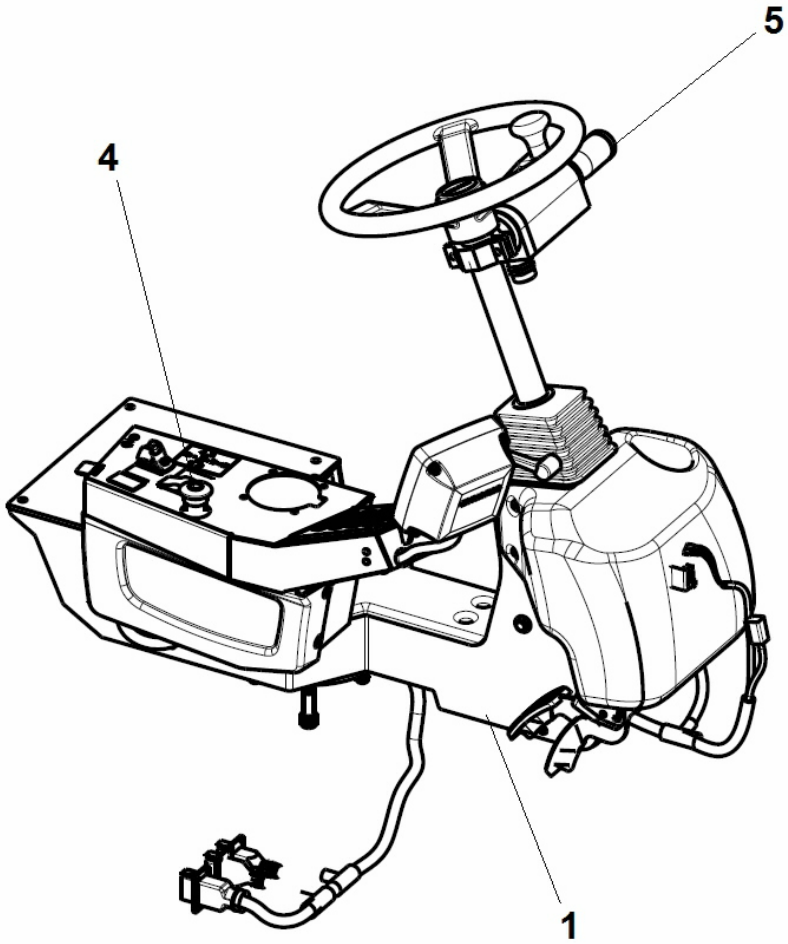

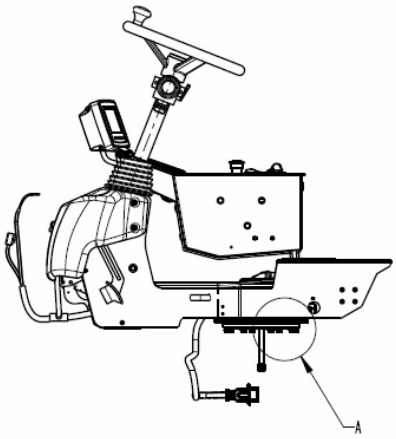

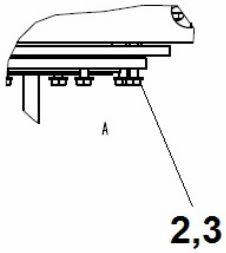

Item	Part No.	Name	Qty	L
1	-	Seat frame assy	1	
2	4700904229	Washer, 8.4x16x1.5 mm 300 HV	4	
3	4700947679	Hex screw	4	
4	4812100137	Control Arm Module	1	
5	4700199700	Joystick gear	1	

Control arm module Control Arm Module

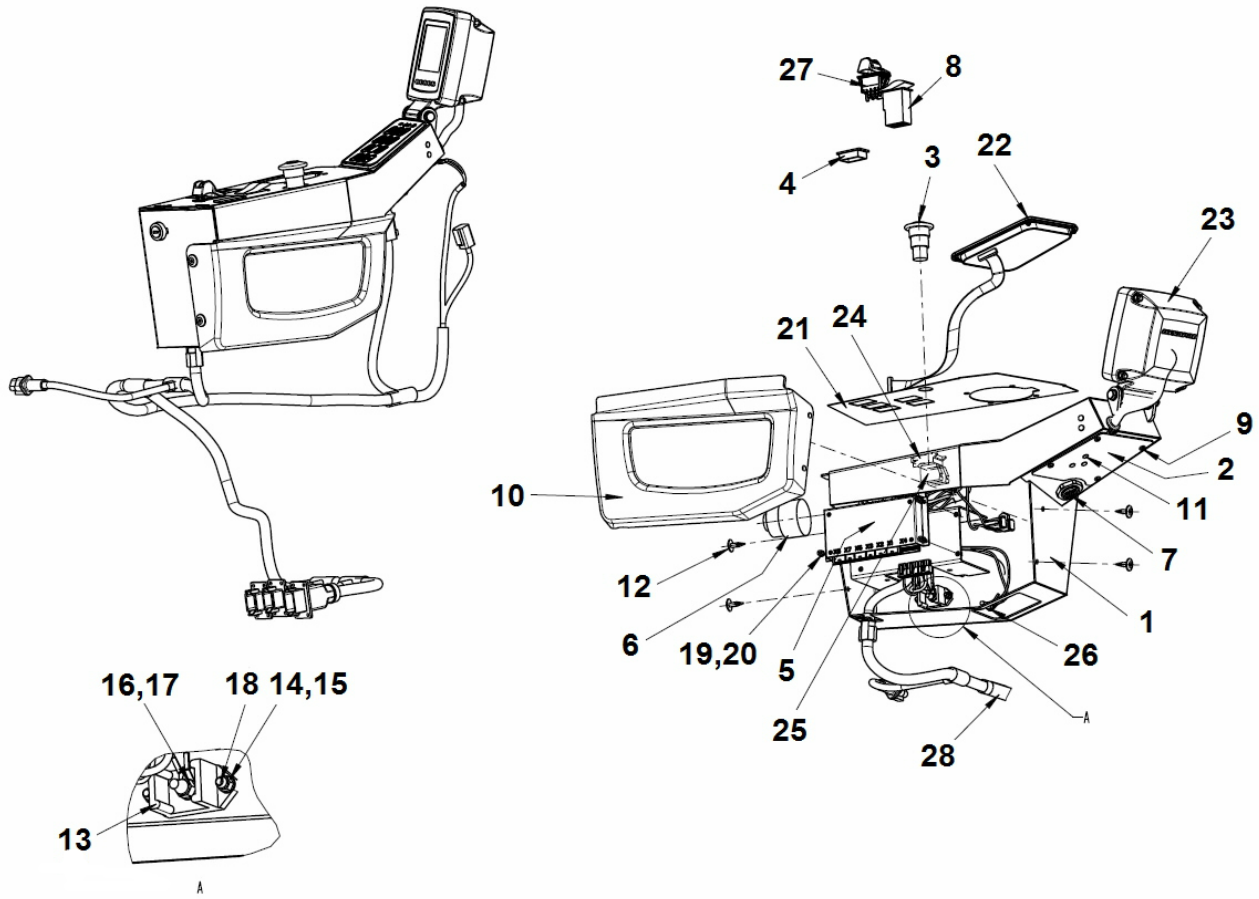

Item	Part No.	Name	Qty	L
1	4812100165	Control box	1	
2	4812101173	Cover	1	
3	4700791739	Emergency stop	1	
4	4700791588	Panel plug	3	
5	4812113875	Control unit	1	
6	4700238158	Ignition switch	1	
.6	4700940451	Ignition key	1	
7	4700385599	Buzzer	1	
8	4700791653	Switch	1	
9	4700526010	Thread rolling screw	4	
10	4700396662	Cover	1	
11	4700902804	Plug	5	
12	4700395785	Expansion rivet	4	
13	4700392930	Junction box	1	
14	4700904281	Washer, 5,3x10x1 300HV	4	
15	4700586001	Lock nut	2	
16	4700904228	Steel plain washer	2	
17	4700586002	Lock nut M6 -8	1	
18	4700500060	Screw M5-0,8x20 8.8	2	
19	4700904698	Steel plain washer	4	
20	4700508017	Cylinder screw	4	
21	4812101073	Decal	1	
22	4812101174	Membrane switch panel	1	
23		Display module	1	
24	4700791733	Fixing collar	1	
25	4700791723	Connector N/C	2	
26	4700570004	Hex. nut	1	
27	4812118697	Switch, parking brake	1	
28	4812100158	Wiring Harness	1	

Control arm module 4700391103 Display module

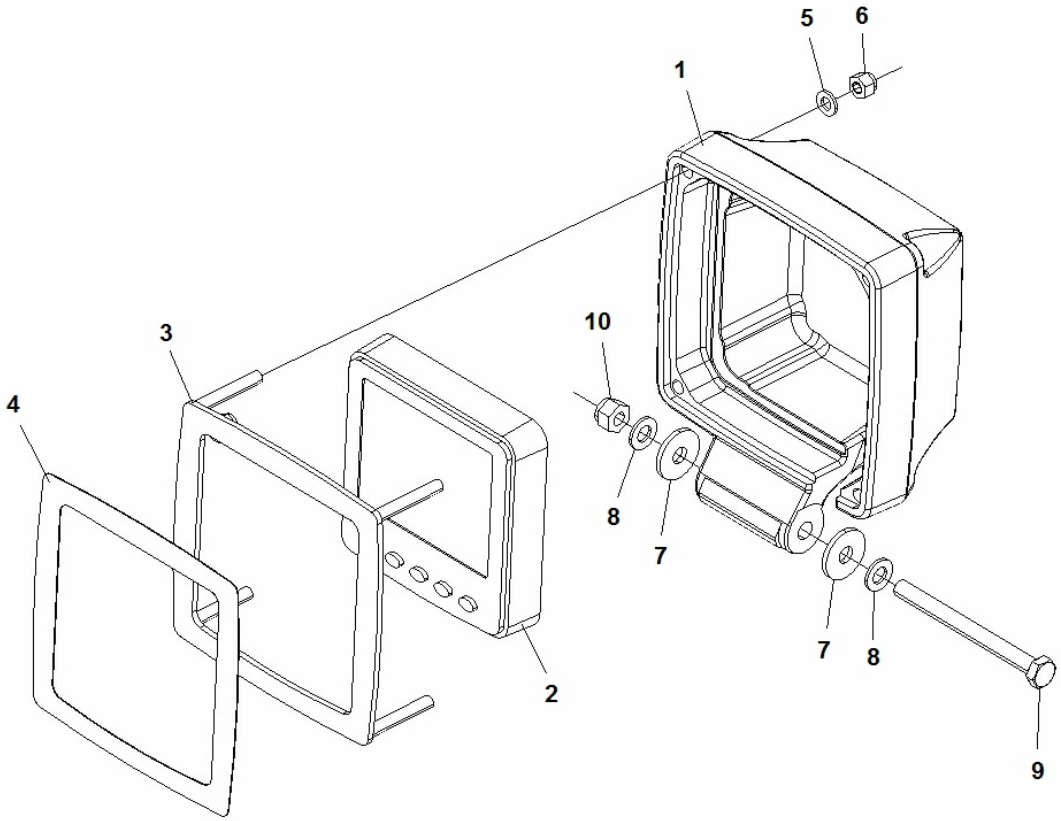

Item	Part No.	Name	Qty	L
1	4700392717	Display holder	1	
2	4812113786	Display unit	1	
3	4700392719	Cover	1	
4	4700393094	Decal	1	
5	4700904228	Steel plain washer	4	
6	4700586002	Lock nut M6 -8	4	
7	4700903662	Washer	2	
8	4700606004	Plastic washer	2	
9	4700500115	Screw	1	
10	4700586003	Hexagon lock nut M8	1	

Seat frame assy Seat frame assy

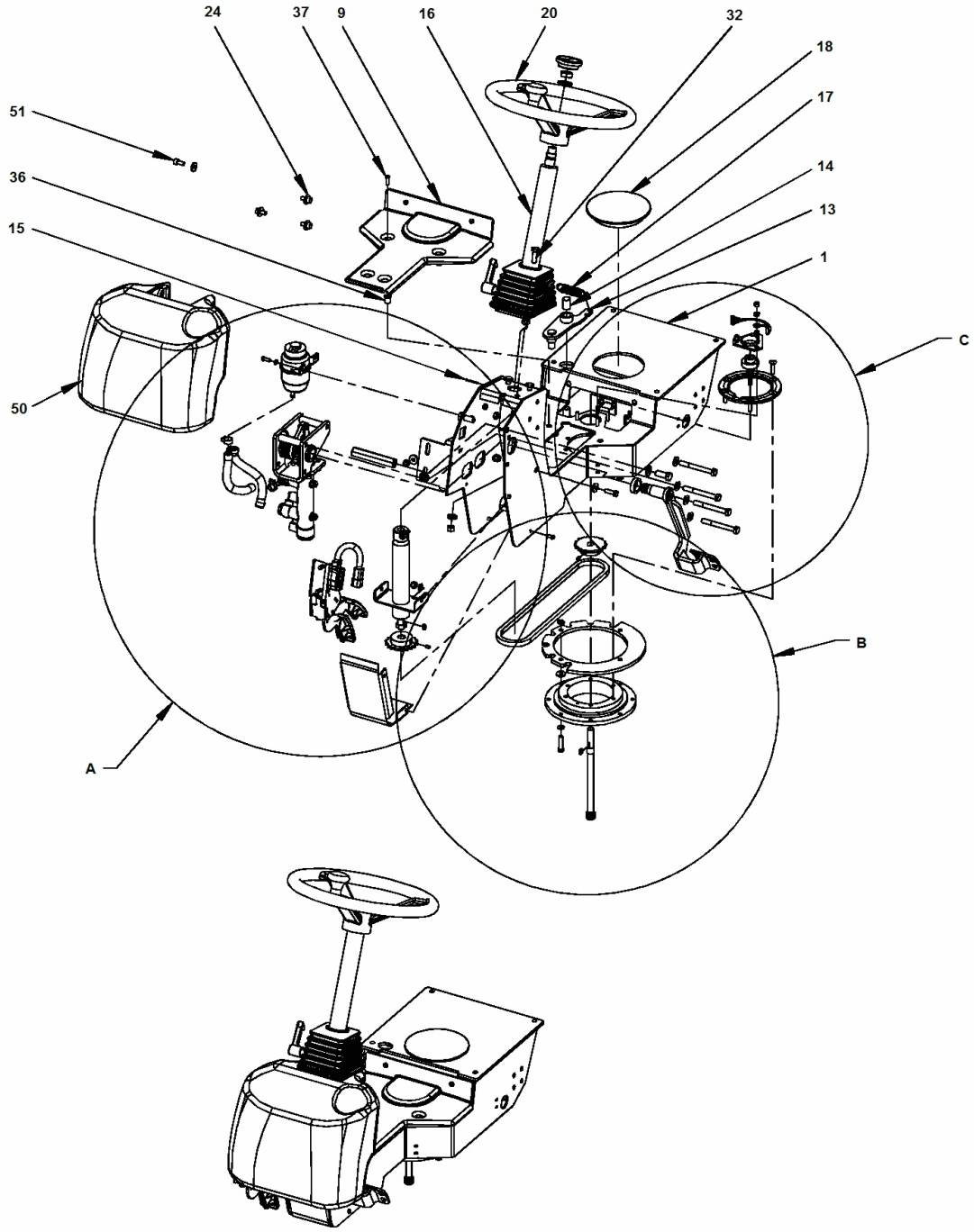

Item	Part No.	Name	Qty	L
1	4812101200	Seat frame	1	
9	4700392839	Cover	1	
13	4812119788	Coupling link	1	
14	4700359819	Bushing	1	
15	4700630008	Pin	1	
16	4700391163	Steering column	1	
17	4700359043	Spring	1	
18	4700359920	Plug	1	
20	4700372964	Steering wheel	1	
24	4700904640	Washer, 8.4x 2x3 mm 300 HV	12	
32	4700500029	Hex. screw	3	
36	4700792539	Rubber nut	6	
37	4700791524	Screw, M6 x 20 mm A2-70	6	
50	4812110538	Cover	1	
51	4700508005	Screw	4	

Seat frame assy 4700391163 Steering column

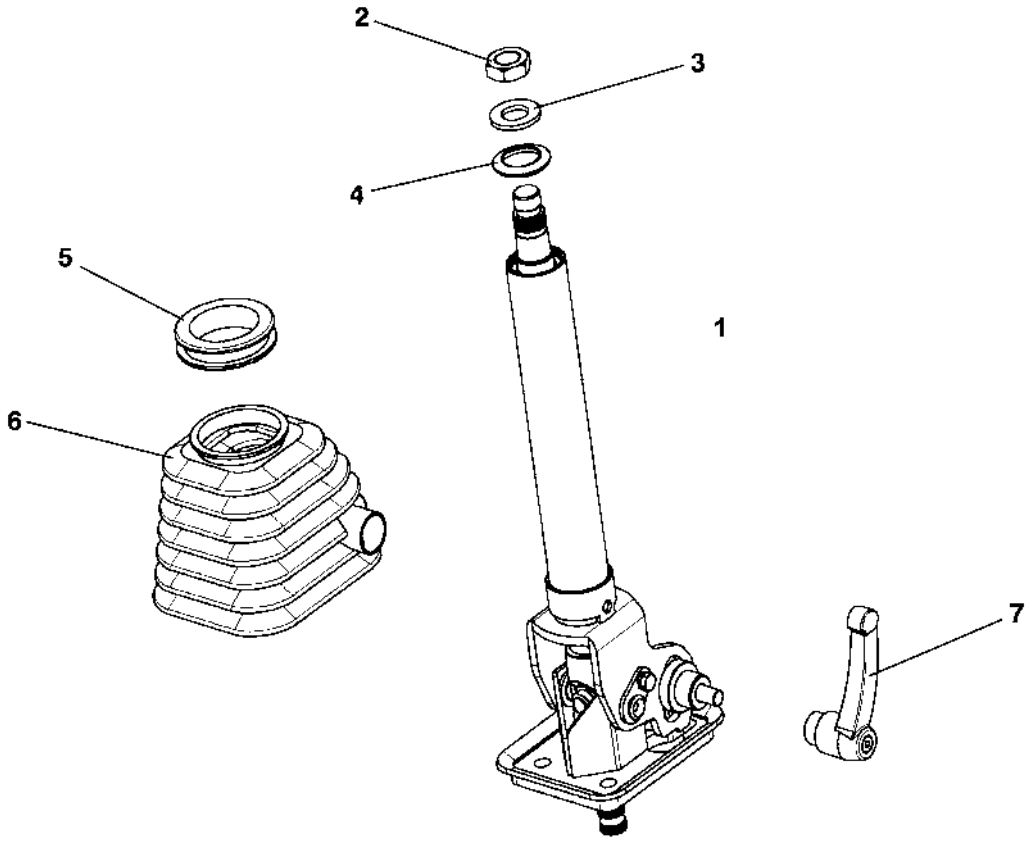

Item	Part No.	Name	Qty	L
1	4700391163	Steering column	1	
.2	4700945632	Nut	1	
.3	4700945633	Washer	1	
.4	4700945634	Rubber cap	1	
.5	4700945635	Bellows ring	1	
.6	4700945636	Bellows	1	
.7	4700945637	Locking handle	1	

Seat frame assy Seat frame assy

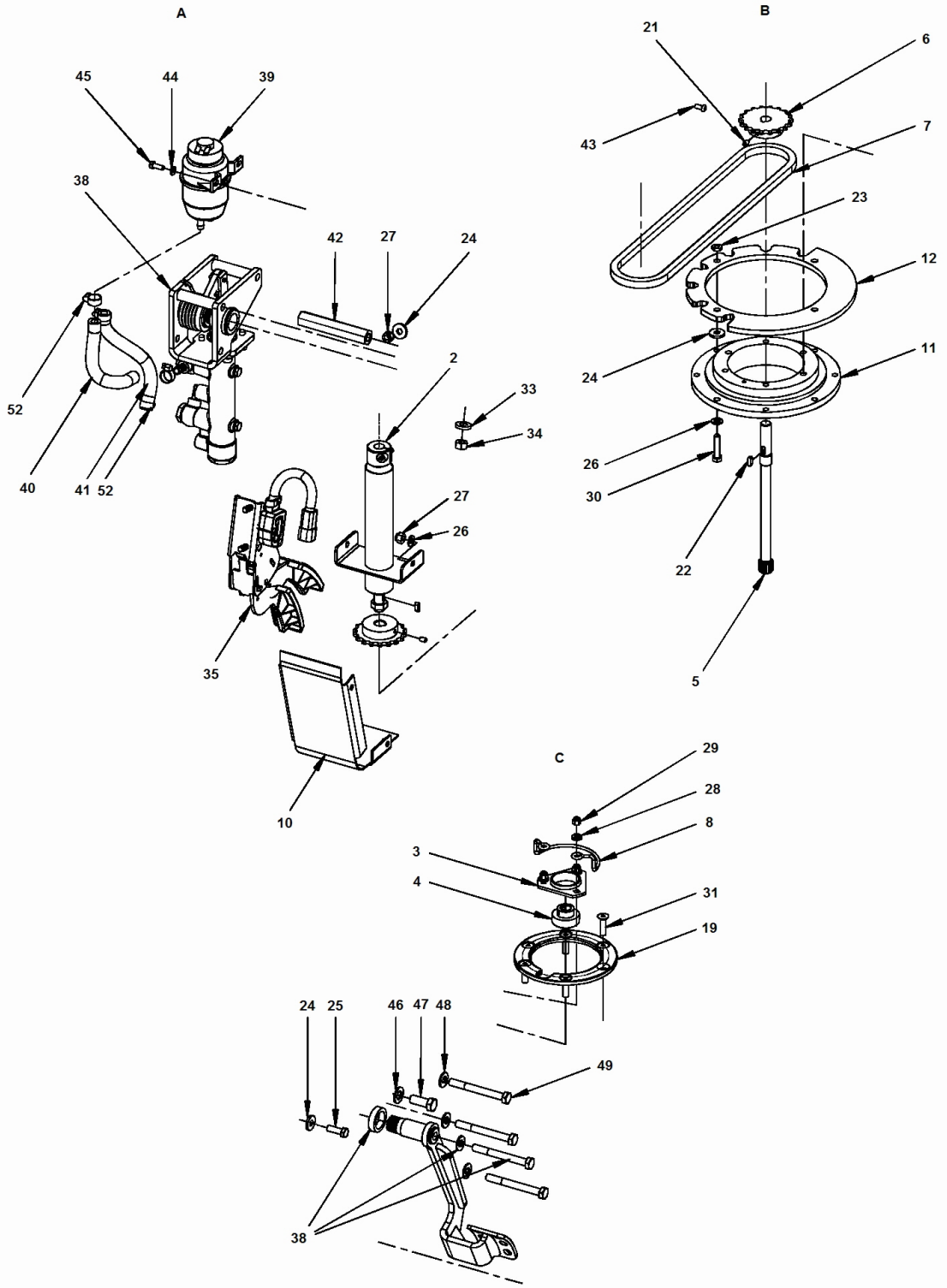

Item	Part No.	Name	Qty	L
2	4700359919	Shaft	1	
3	4700903917	Bearing outer	1	
4	4700903918	Bearing inner	1	
5	4700391770	Shaft	1	
6	4700359916	Chain wheel	2	
7	4700379718	Chain and connecting link	1	
8	4700372672	Chain guard	1	
10	4700395536	Cover	1	
11	4700359125	Ball bearing	1	
12	4700379728	Locking disc	1	
19	4700372965	Lock ring	1	
21	4700516051	Set screw	2	
22	4700350009	Flat key	2	
23	4700573008	Nut M8	4	
24	4700904640	Washer, 8.4x 2x3 mm 300 HV	12	
25	4700500021	Hex. screw	2	
26	4700904229	Washer, 8.4x16x1.5 mm 300 HV	6	
27	4700586003	Hexagon lock nut M8	4	
28	4700603001	Washer	3	
29	4700586002	Lock nut M6 -8	3	
30	4700792678	Screw	4	
31	4700902520	Screw	6	
33	4700904557	Washer, 10.5x22x4 mm 300 HV	3	
34	4700570006	Hex. nut	3	
35	4700395471	Throttle control Eletric	1	
38		Brake pedal	1	
39	4700396327	Reservoir	1	
40	4700904985	Fuel hose, fire-resistant	XL	A
41	4700904985	Fuel hose, fire-resistant	XL	B
42	4700395534	Spacer	1	
43	4700904650	Screw, M8 x 50 mm 12.9 UNBRAKO® U-130	4	
44	4700904228	Steel plain washer	2	
45	4700500013	Hex. screw	2	
46	4700904231	Steel plain washer, 13x24x2 mm 300 HV	2	
47	4700500046	Hex. head screw M12x030H	2	
48	4700904230	Washer	3	
49	4700500077	Screw	3	

Item	Part No.	Name	Qty	L
52	4700313001	Hose clamp	4	

Comments for Page: Seat frame assy

(L)OCAL REMARKS

A | en_US | L=0.16m

B | en_US | L=0.18m

Seat frame assy 4700395462 Brake pedal

This page intentionally left blank

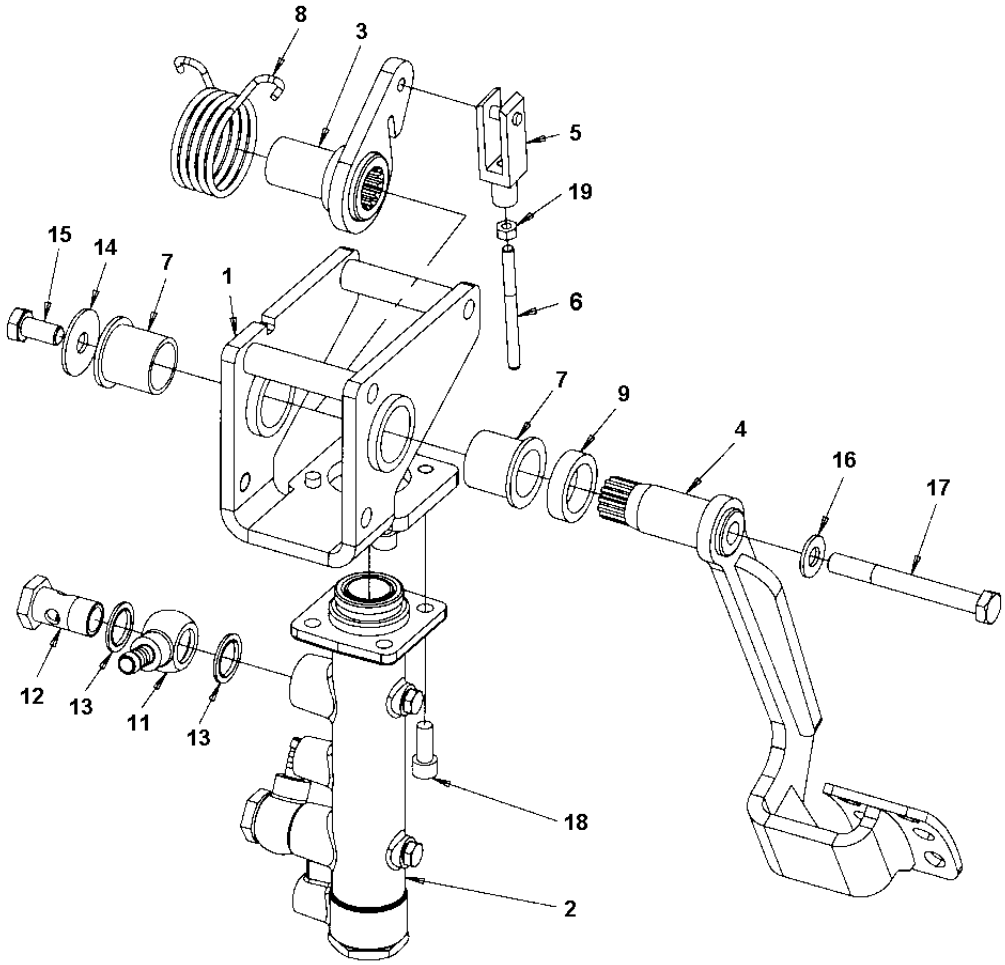
8
3
5
19
15
14
7
1
6
7
9
4
16
17
12
13
11
13
18
2

Item	Part No.	Name	Qty	L
1	4700395463	Bracket	1	
2	4700395470	Brake cylinder	1	
3	4700395464	Lever	1	
4	4700395465	Pedal	1	
5	4700900445	Fork	1	
6	4700395466	Pin	1	
7	4700395468	Bushing	2	
8	4700395467	Torsion spring	1	
9	4700395469	Spacer	1	
11	4700792759	Banjo fitting	2	
12	4700904292	Hollow screw	2	
13	4700162015	Seal ring	4	
14	4700615061	Steel plain washer	1	
15	4700500048	Screw	1	
16	4700904230	Washer	1	
17	4700500077	Screw	1	
18	4700508009	Screw	4	
19	4700570004	Hex. nut	1	

Engine 4812100673 Air cleaner hose module

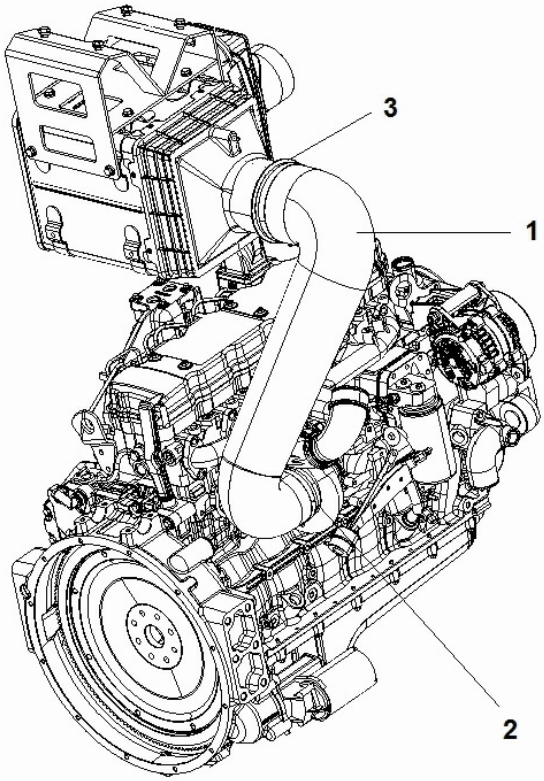

Item	Part No.	Name	Qty	L
1	4812100508	Air filter hose	1	
2	4700313105	Hose clamp	1	
3	4812100665	Clamp	1	

Engine 4812100676 Exhaust Tube Module

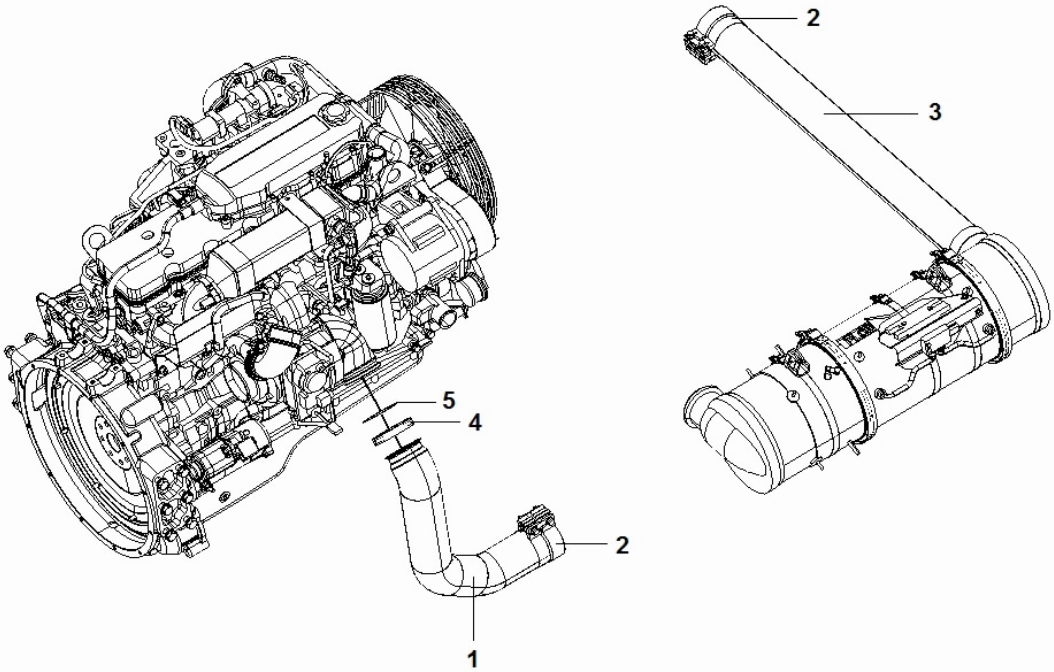

Item	Part No.	Name	Qty	L
1	4812100658	Exhaust pipe	1	
2	4812101064	Clamp	2	
3	4812100521	Exhaust pipe	1	
4	4812101819	Clamp	1	
5	4812101820	Gasket	1	

Engine 4812100687 Fuel Hoses Kit

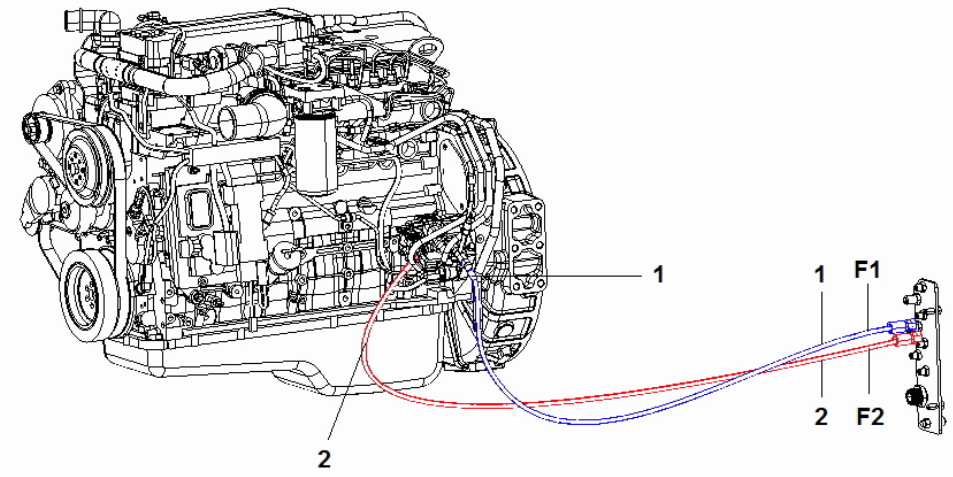

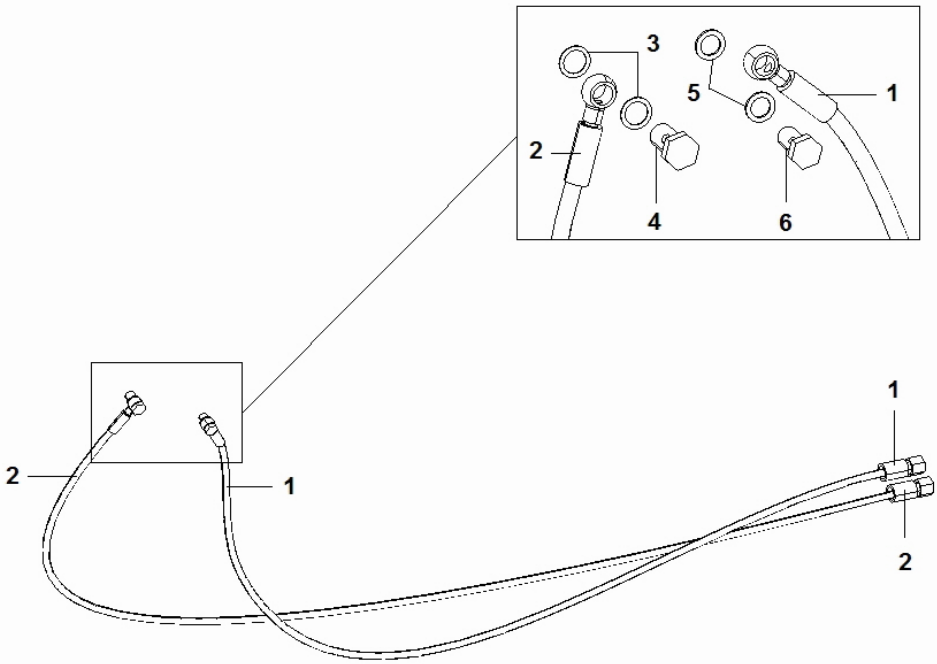

Item	Part No.	Name	Qty	L
1	4812101181	Fuel hose	1	
2	4812101182	Fuel hose	1	
3	4700330329	Seal gasket	2	
4	4700330171	Hollow screw, M14	1	
5	4700230277	Copper washer 12,2x17,9x1,5	2	
6	4700234919	Screw M12-1,5-24-3	1	

Engine 4812100894 Decal Kit Tier 4

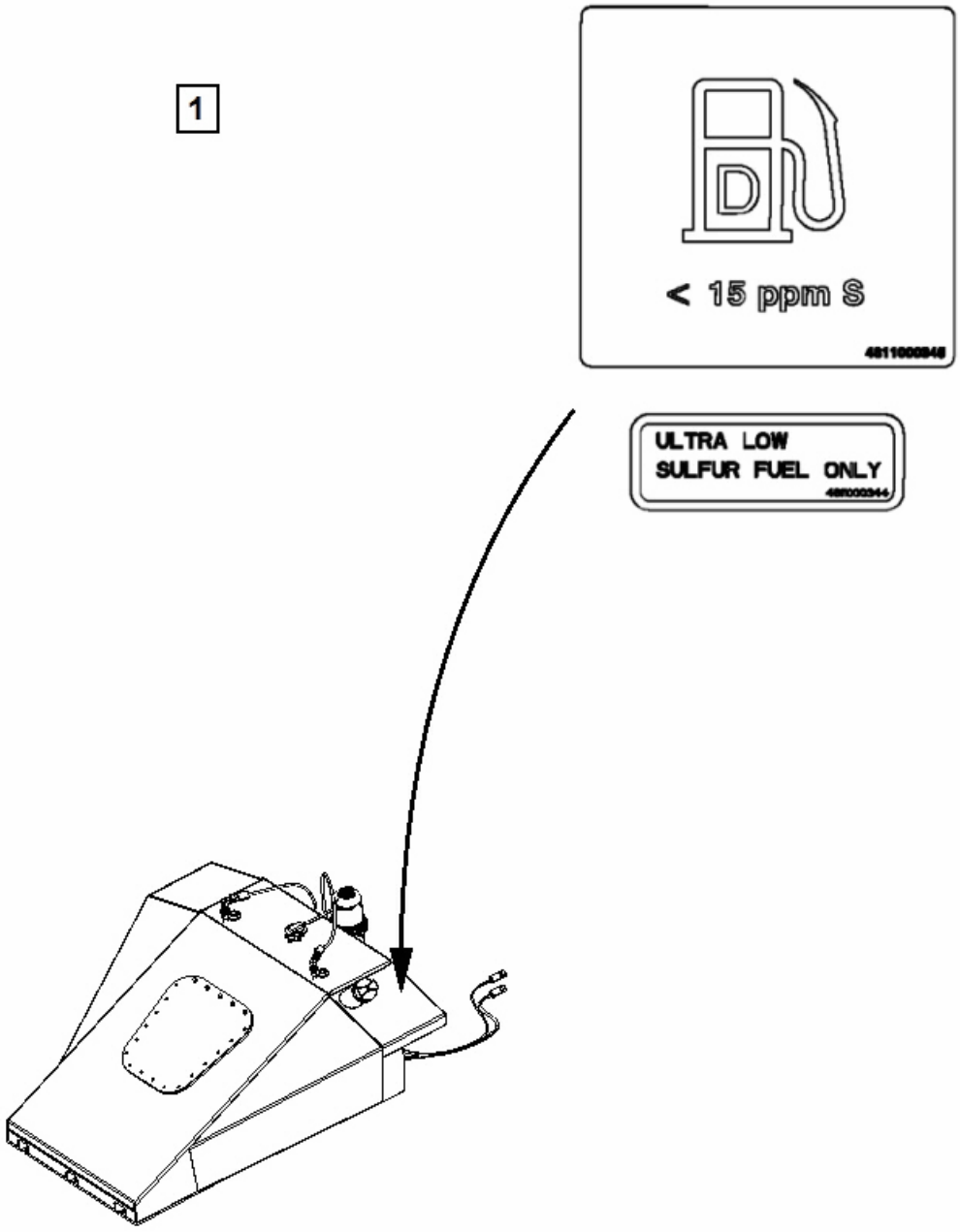

Item	Part No.	Name	Qty	L
1	4811000345	Decal "ULTRA LOW SULFUR FUEL ONLY"	1	
2	4811000344	Decal, low sulfur	1	

Engine 4812100896 DPF Module

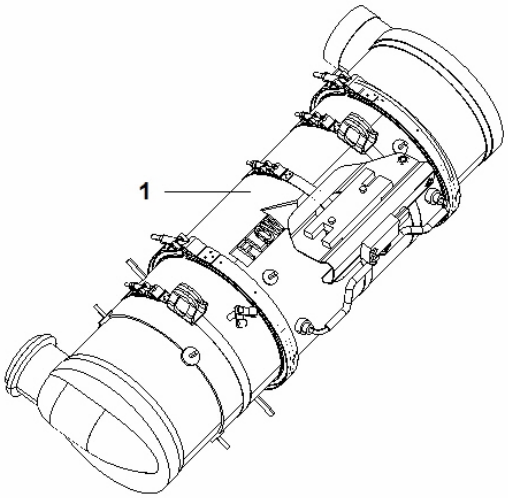

Item	Part No.	Name	Qty	L
1	4812100547	DPF Module	1	

Engine 4812101058 Propeller module

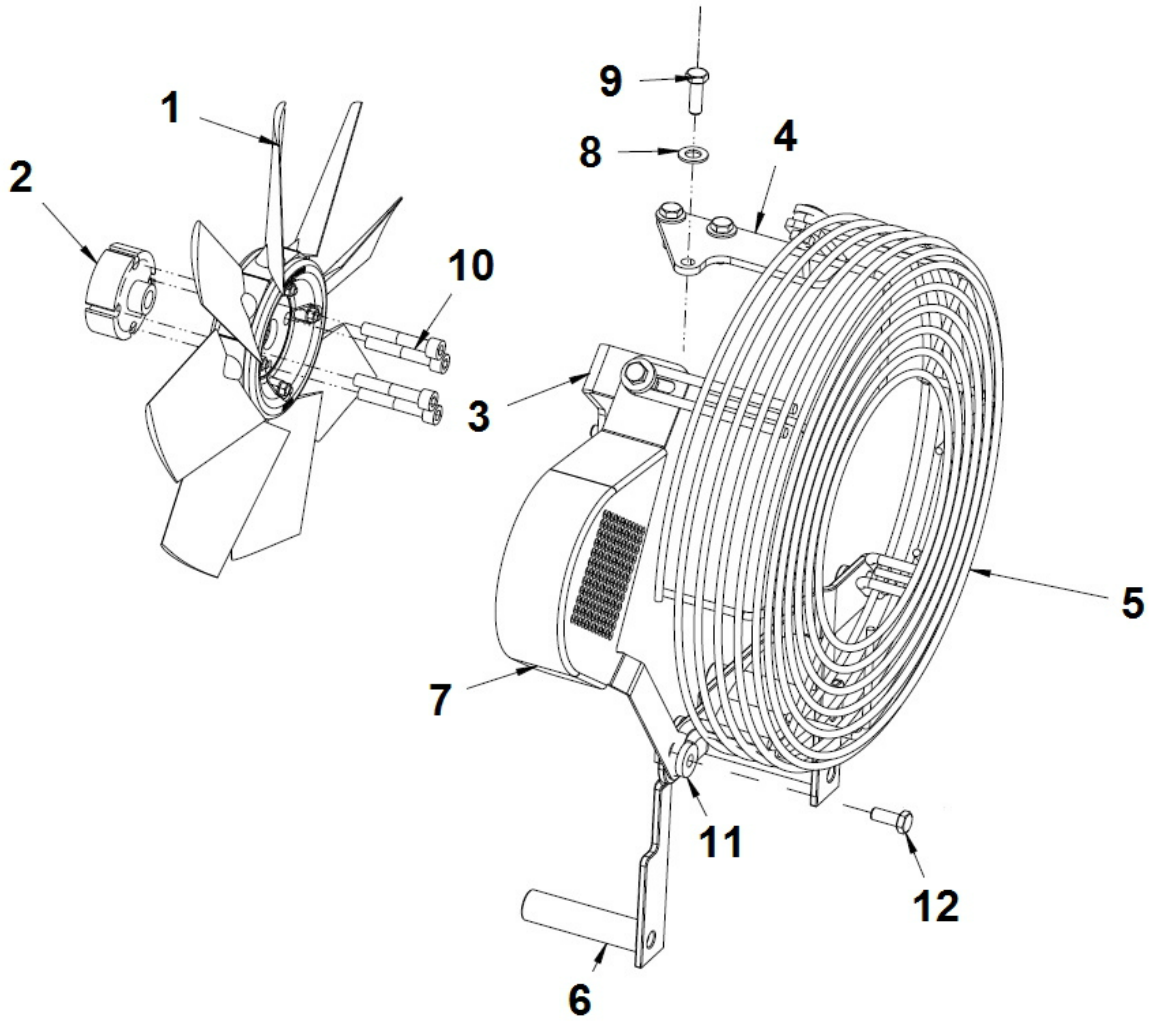

Item	Part No.	Name	Qty	L
1	4812101082	Propeller	1	
2	4812101083	Spacer	1	
3	4812101121	Support	1	
4	4812101123	Support	1	
5	4812101124	Fan guard	1	
6	4812101670	Bracket	1	
7	4812101679	Belt guard	1	
8	4700904231	Steel plain washer, 13x24x2 mm 300 HV	9	
9	4700500029	Hex. screw	9	
10	4700508014	Hexagon socket head cap screw	4	
11	4700904567	Washer, 10.5x28x6 mm 300 HV	4	
12	4700500028	Screw, M10x25 mm 8.8 A3K	3	

Engine 4812100960 Air filter module

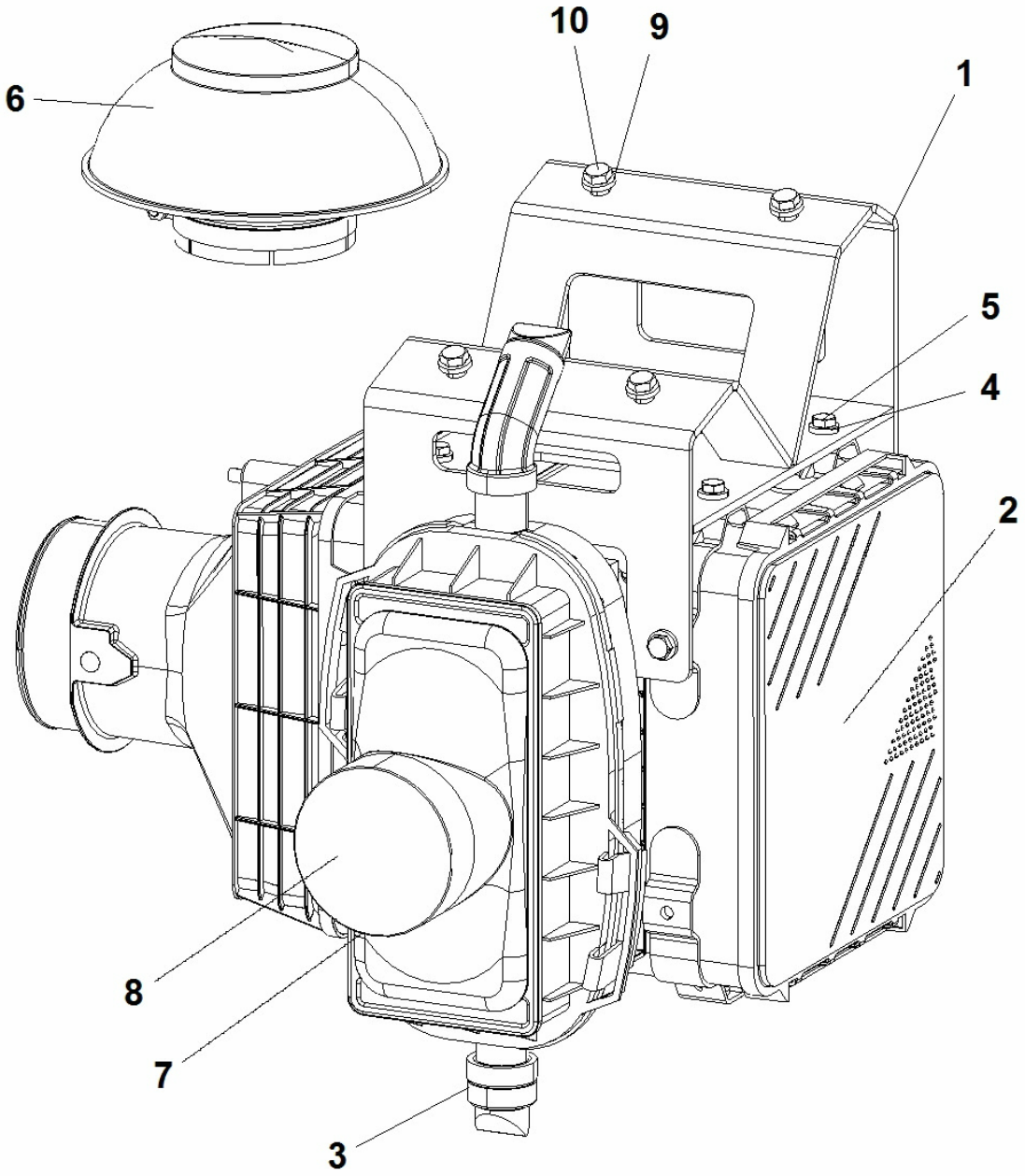

Item	Part No.	Name	Qty	L
1	4812100501	Bracket	1	
2	4812100745	Direct flow filter	1	
.2	4812101418	Primary filter element	1	
.2	4812101418	Primary filter element	1	
.2	4812101419	Secondary filter element	1	
.2	4812101419	Secondary filter element	1	
3	4812101090	Drain	1	
4	4700904557	Washer, 10.5x22x4 mm 300 HV	8	
5	4700500048	Screw	8	
6	4812101959	Rain cap	1	
7	4700348309	Rubber bushing	1	
8	4700904060	Hose clamp	1	
9	4700904703	Plain washer 13x24x4 mm	4	
10	4700500046	Hex. head screw M12x030H	4	

4812100672 Engine Module Tier 4i 4812100672 Engine Module Tier 4i

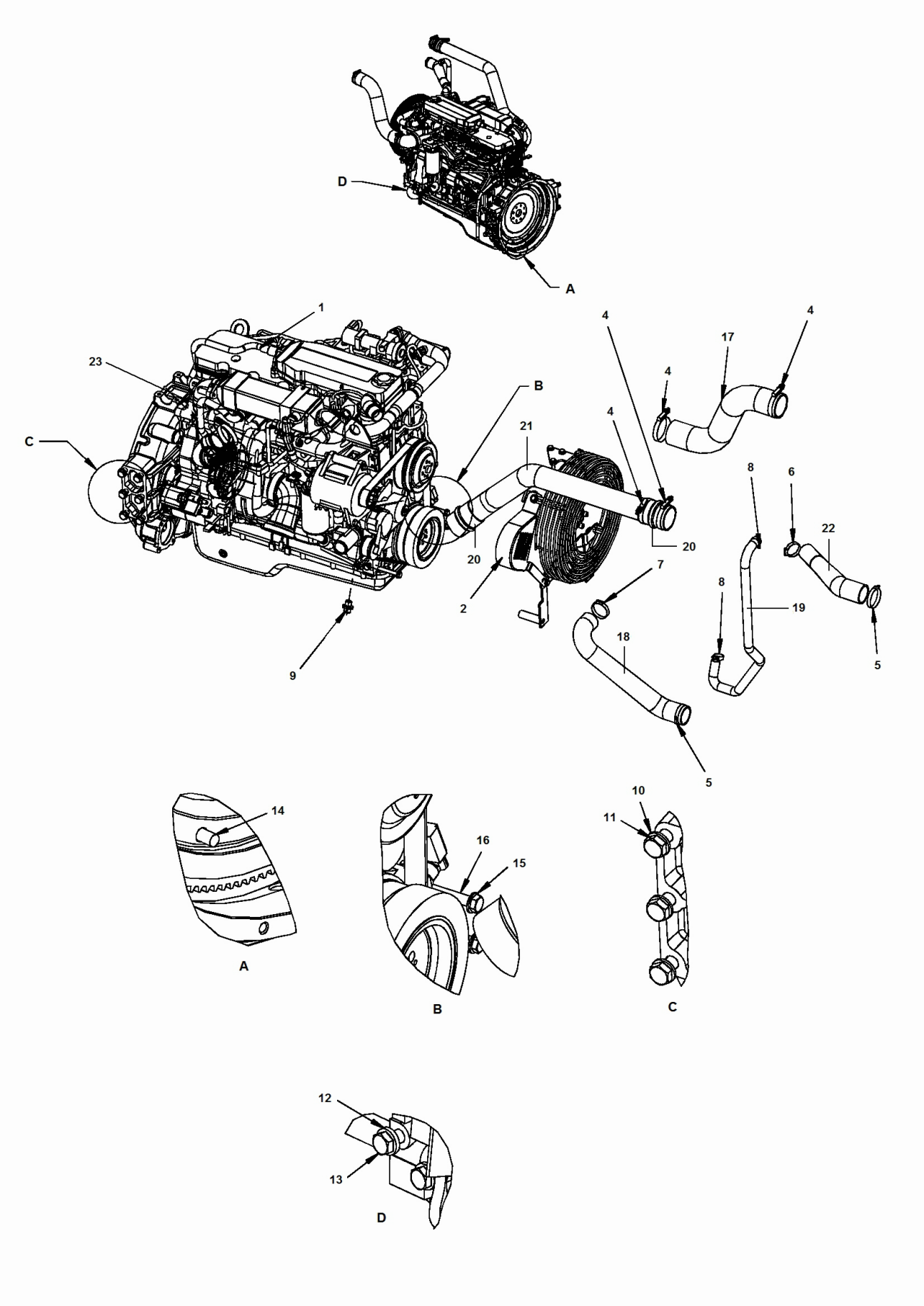

Item	Part No.	Name	Qty	L
1	4812100670	Diesel Engine Tier 4i	1	
2	4812101058	Propeller module	1	
4	4700386966	Hose clamp 2.3/4"-3.5/8"	6	
5	4700313023	Hose clamp	2	
6	4700313009	Hose clamp	1	
7	4700313010	Hose clamp	1	
8	4700313006	Hose clamp	2	
9	4812100601	Hose connection	1	
10	4700904232	Steel plain washer	12	
11	4700947696	Screw	12	
12	4700904703	Plain washer 13x24x4 mm	6	
13	4700947688	Screw M12 x 35 mm	6	
14	4700199551	Screw	8	
15	4700904231	Steel plain washer, 13x24x2 mm 300 HV	3	
16	4700500174	Hex. screw	3	
17	4812100728	CAC Hose	1	
18	4812100653	Cooling Hose	1	
19	4812100509	Cooling Hose	1	
20	4700385691	Air intake hose	2	
21	4812101378	Pipe	1	
22	4812101850	Hose	1	
23	4812101832	Module deflector	1	
24	4812101815	EGR temperature sensor	1	A
25	4812101816	EGR pressure sensor	1	A
26	4812101817	EGR pressure sensor	1	A
27	4812101818	Breather pressure sensor	1	A

Comments for Page: 4812100672 Engine Module Tier 4i

(L)OCAL REMARKS

A | en_US | Not shown in illustration

4812100672 Engine Module Tier 4i Fan module

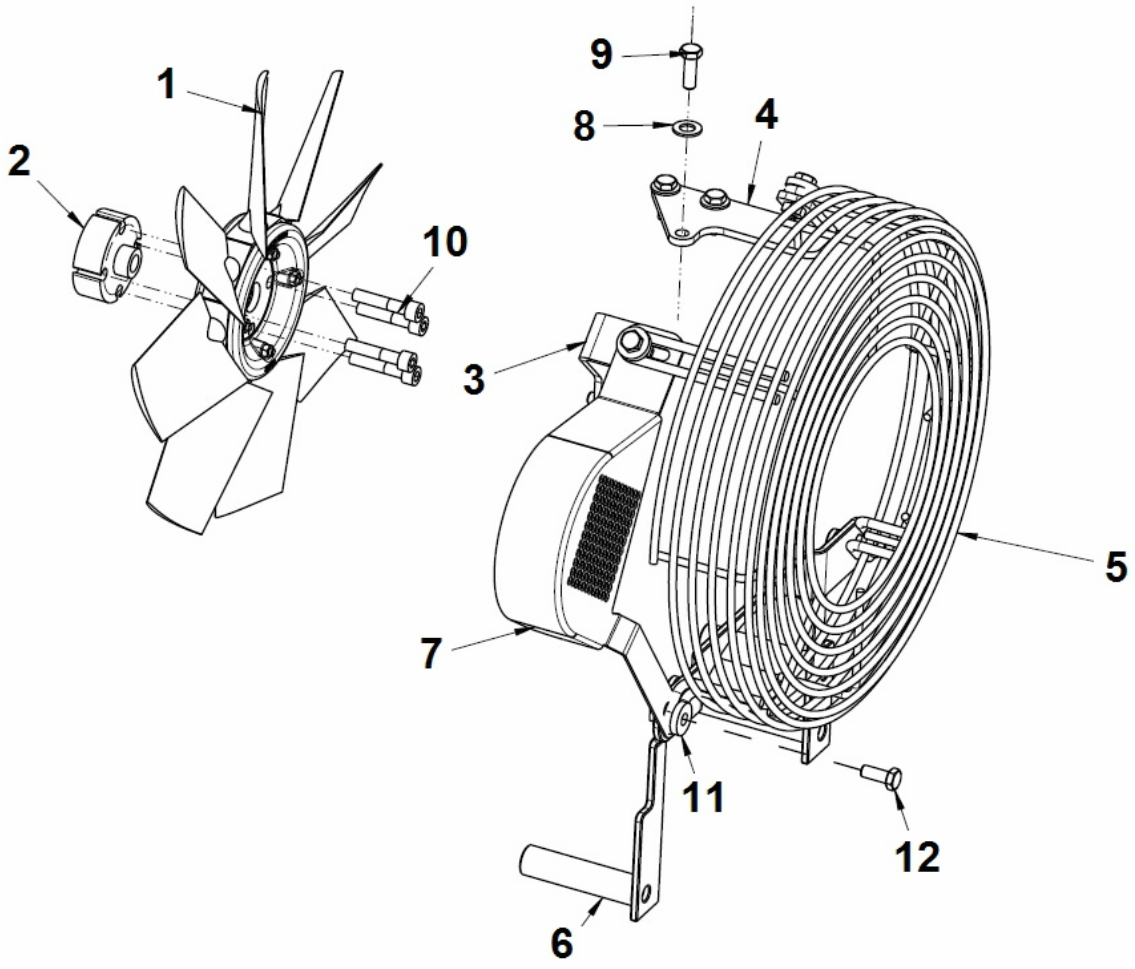

Item	Part No.	Name	Qty	L
1	4812101082	Propeller	1	
2	4812101083	Spacer	1	
3	4812101121	Support	1	
4	4812101123	Support	1	
5	4812101124	Fan guard	1	
6	4812101670	Bracket	1	
7	4812101679	Belt guard	1	
8	4700904231	Steel plain washer, 13x24x2 mm 300 HV	6	
9	4700500029	Hex. screw	6	
10	4700508074	Screw M10-1,5x50 8,8	4	
11	4700904567	Washer, 10.5x28x6 mm 300 HV	4	
12	4700500028	Screw, M10x25 mm 8.8 A3K	3	

4812100672 Engine Module Tier 4i 4812101832 Module deflector

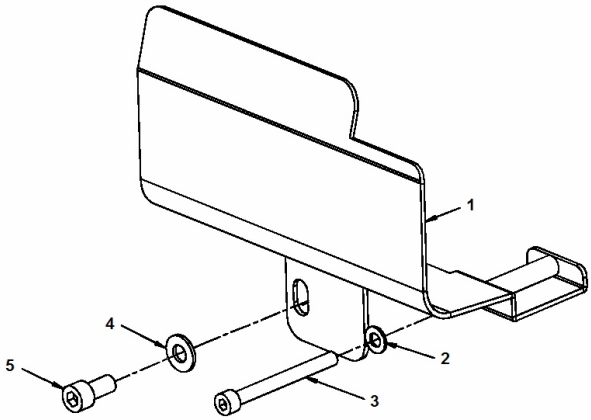

Item	Part No.	Name	Qty	L
1	4812101831	Baffle	1	
2	4700904229	Washer, 8.4x16x1.5 mm 300 HV	1	
3	4700508078	Screw	1	
4	4700904230	Washer	1	
5	4700508028	Screw	1	

4812100672 Engine Module Tier 4i 4812100670 Diesel Engine Tier 4i

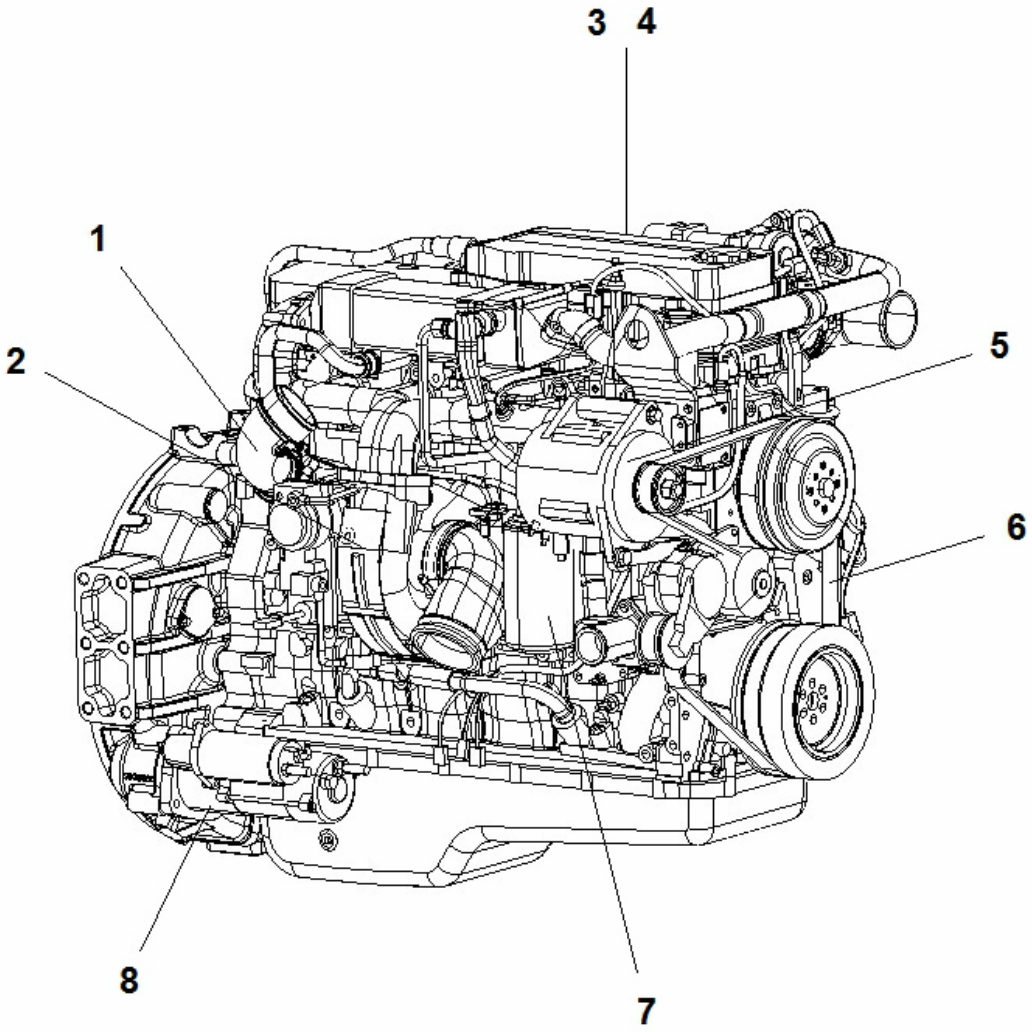

Item	Part No.	Name	Qty	L
1	4812315810	Turbo charger gasket	1	
2	4812315811	Turbo charger	1	
3	4812101417	Prefuel filter element	1	
4	4812101724	Fuel filter element	1	
5	4812315816	Alternator	1	
6	4812315818	V-belt	1	
7	4812101723	Oil filter	1	
8	4812315819	Start engine	1	

4812100672 Engine Module Tier 4i 4812100670 Engine sensors

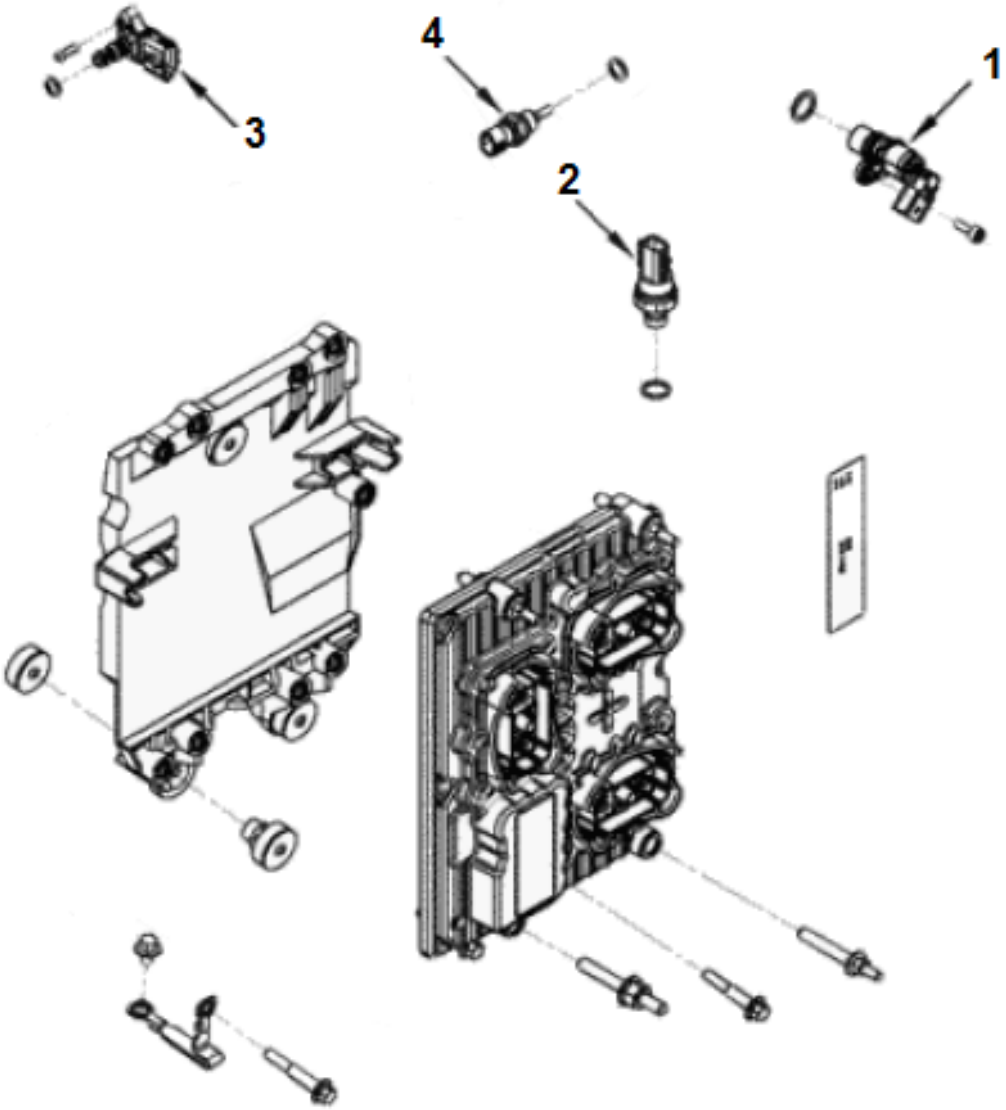

Item	Part No.	Name	Qty	L
1	4812101800	Position sensor	2	
2	4700198268	Oil pressure sensor	1	
3	4812101801	Pressure and temperature sensor	1	
4	4812101813	Water temperature sensor	1	

4812100950 Fuel system 4812100950 Fuel system

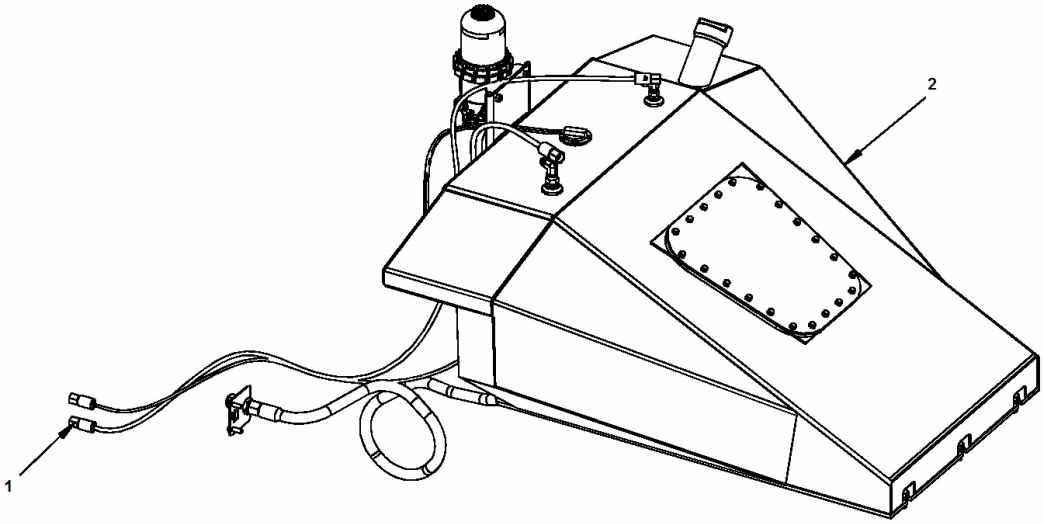

Item	Part No.	Name	Qty	L
1	4812100908	Fuel Hose Kit	1	
2	4812101353	Fuel tank module	1	

4812100908 Fuel Hose Kit 4812100908 Fuel Hose Kit

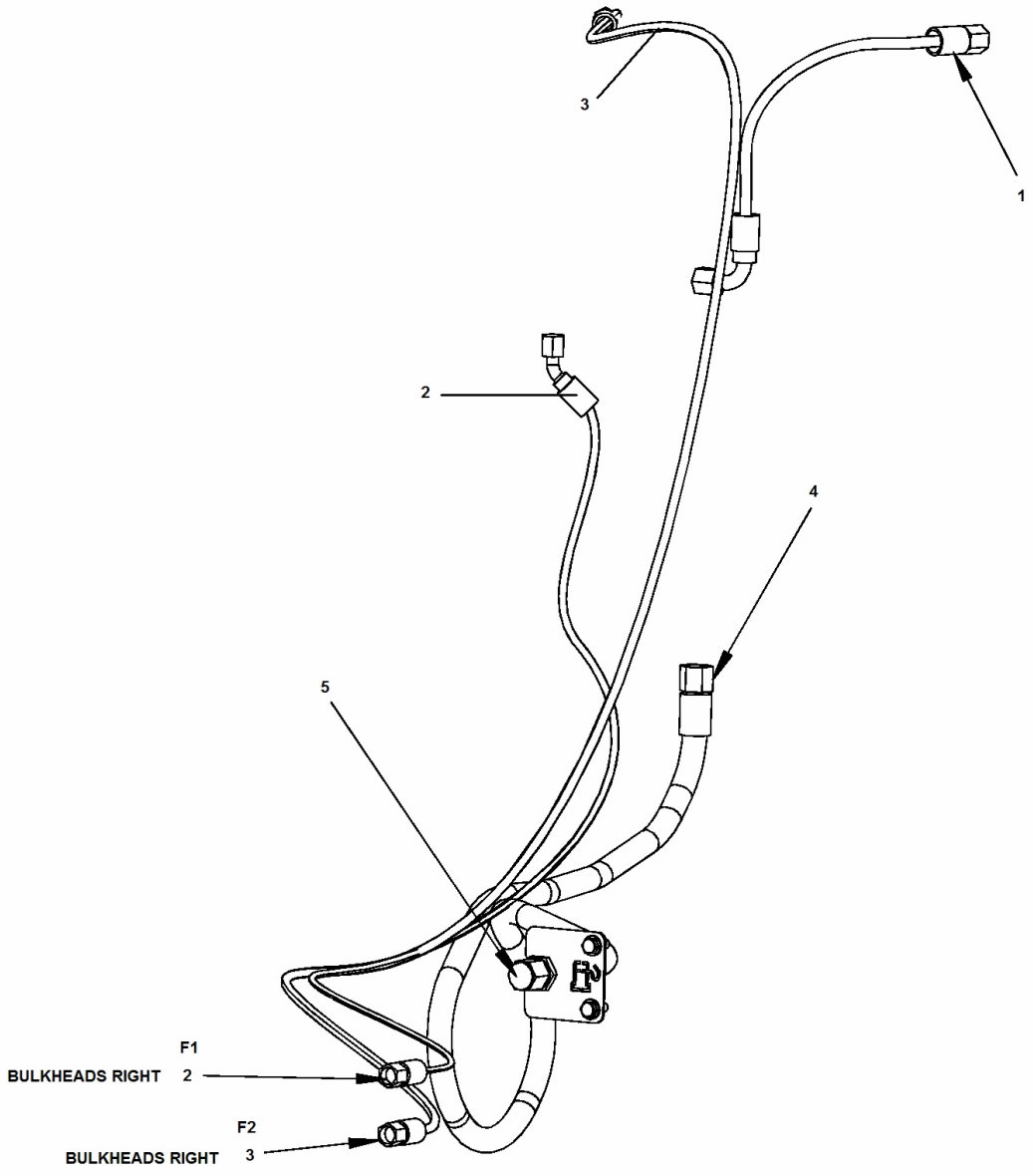

Item	Part No.	Name	Qty	L
1	4812101178	Hydraulic hose	1	
2	4812101179	Hydraulic hose	1	
3	4812101180	Hydraulic hose	1	
4	4812101752	Fuel hose	1	
5	4812101798	Bracker kit	1	

4812100908 Fuel Hose Kit 4812101798 Bracker kit

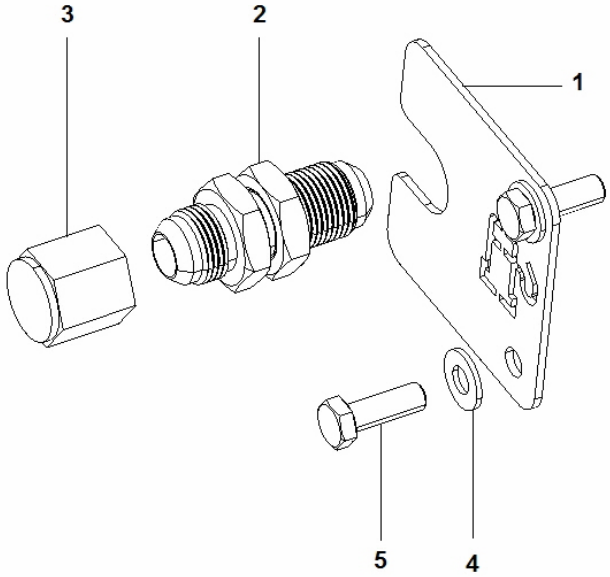

Item	Part No.	Name	Qty	L
1	4812101782	Bracket	1	
2	4700230456	Straight connector	2	
3	4700230401	Plug	2	
4	4700904230	Washer	2	
5	4700500029	Hex. screw	2	

4812101353 Fuel tank module 4812101353 Fuel tank module

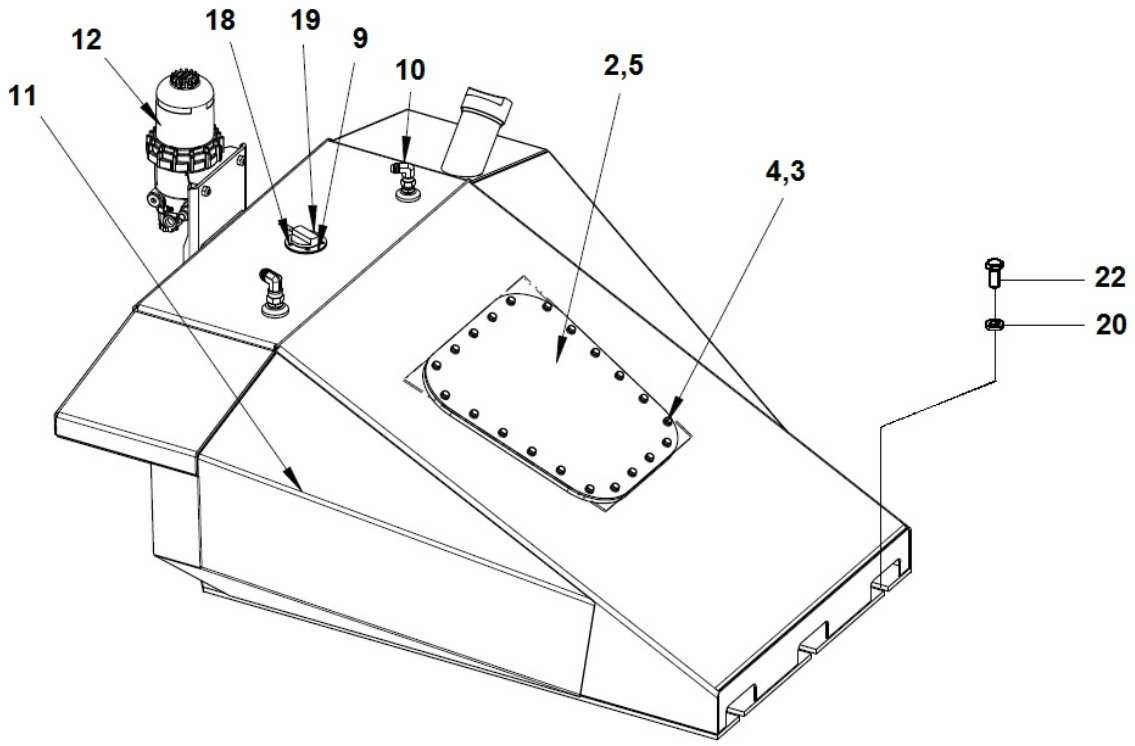

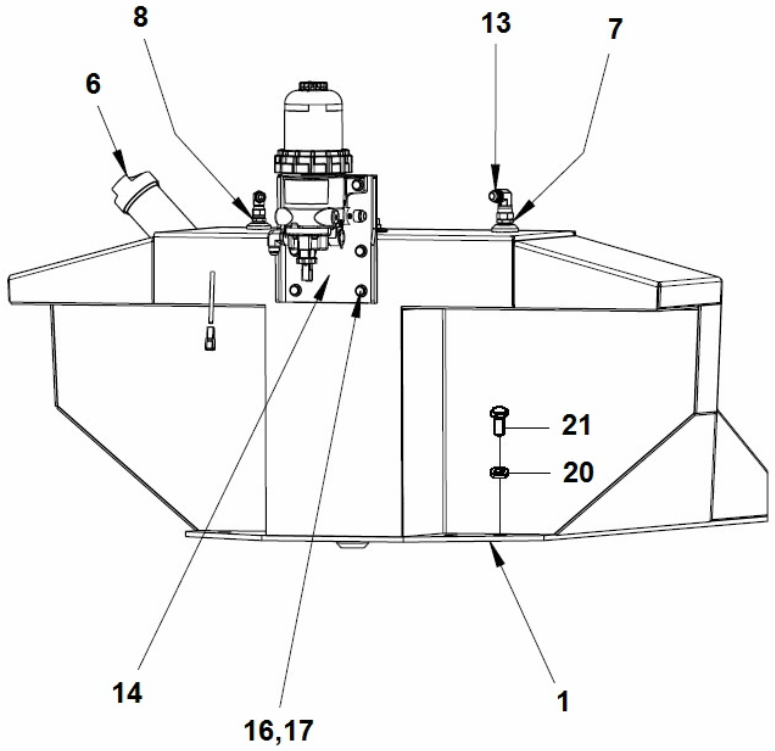

Item	Part No.	Name	Qty	L
1	4812101350	Fuel tank	1	
2	4812101351	Cover	1	
3	4700904556	Steel plain washer	21	
4	4700500188	Screw M8-1,25x14 8,8	21	
5	4812101354	O-ring	1	
6	4700380435	Cap	1	
.6	4700902866	Key Marked "455"	1	
7	4812100718	Fuel tube	1	
8	4812100719	Fuel tube	1	
9	4700370746	Gasket	1	
10	4700334197	Elbow 90	1	
11	4700390934	Level sender	1	
12	4812100909	DP240 module	1	
13	4700334198	Connector Elbow 90	1	
14	4812101347	Bracket	1	
15	4700334240	Straight connector	1	
16	4700904230	Washer	4	
17	4700500027	Screw M10-1,55x22 8.8	4	
18	4700904206	Screw	5	
19	4700372718	Lid	1	
20	4700904558	Washer, 17x30x6 mm 300 HV	7	
21	4700500093	Hex. screw	4	
22	4700500123	Hex. screw	3	

4812101353 Fuel tank module 4812100909 DP240 module

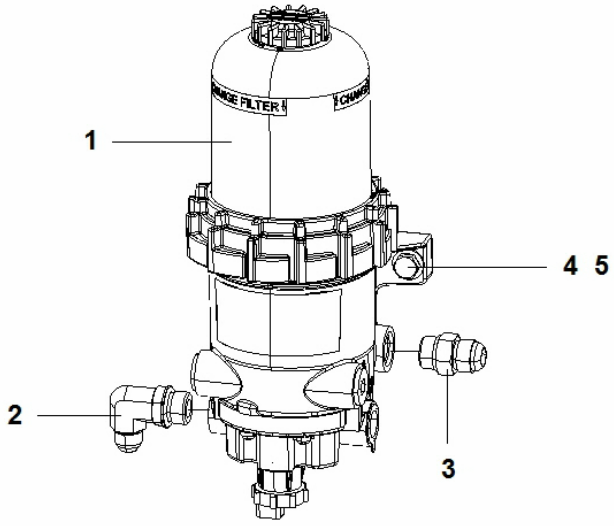

Item	Part No.	Name	Qty	L
1	4812100746	Fuel filter	1	
.1	4812101417	Prefuel filter element	1	
2	4700334558	Elbow 90G with O-ring	1	
3	4700234119	Straight connector	1	
4	4700904230	Washer	2	
5	4700500030	Hexagon head screw	2	

4812100970 Exhaust tubes module 4812100970 Exhaust tubes module

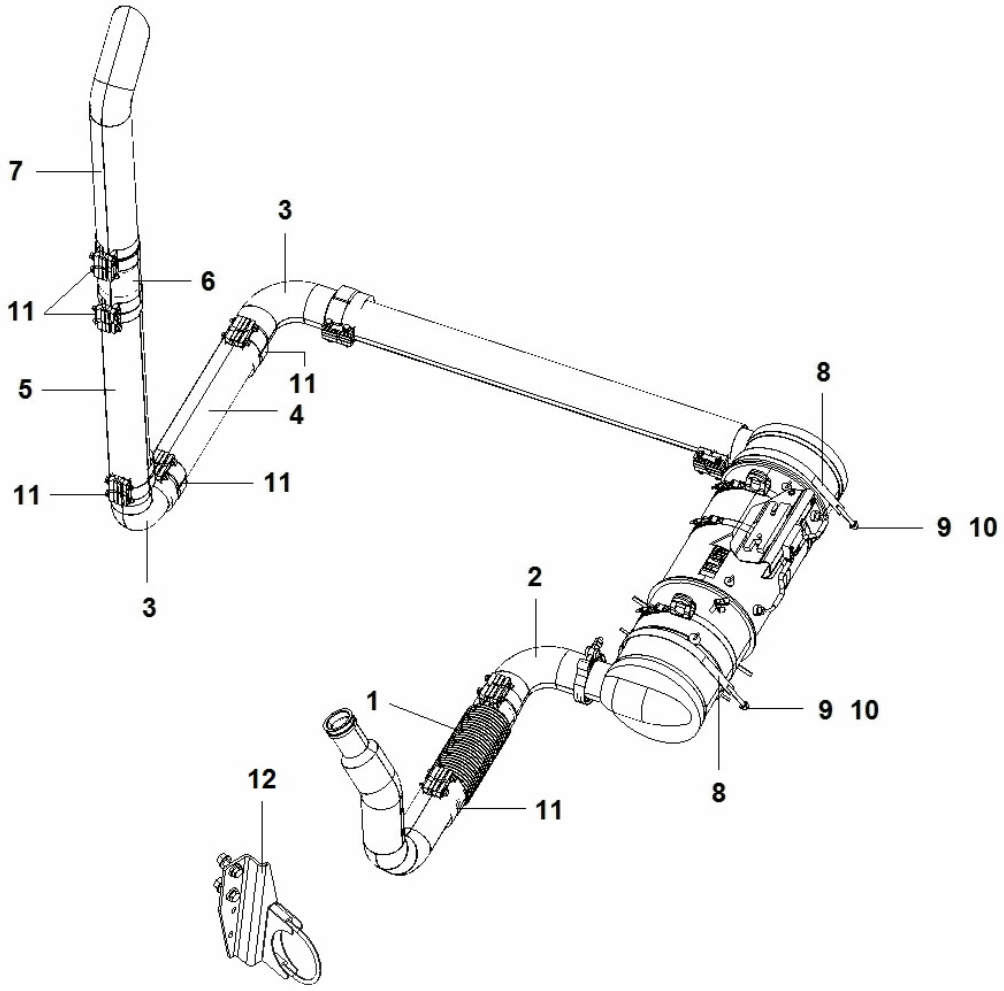

Item	Part No.	Name	Qty	L
1	4812100518	Flextube	1	
2	4812100520	Exhaust pipe	1	
3	4812100529	Elbow 90º	2	
4	4812100528	Exhaust pipe	1	
5	4812100522	Exhaust pipe	1	
6	4812100527	Exhausting Tube	1	
7	4812100526	Exhaust pipe	1	
8	4812100693	Clamp	2	
9	4700904230	Washer	2	
10	4700570006	Hex. nut	2	
11	4812101064	Clamp	6	
12	4812101871	Bracket module	1	

4812100970 Exhaust tubes module 4812101871 Bracket module

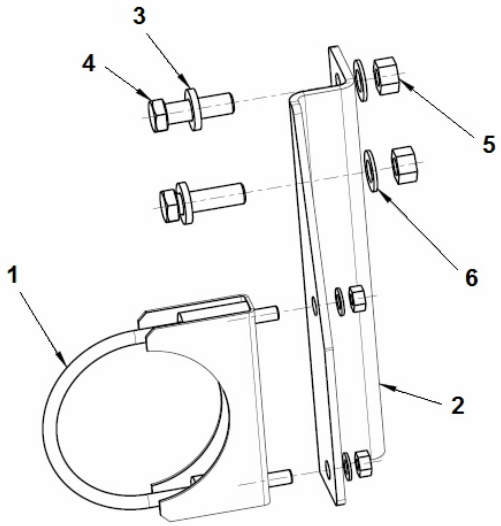

Item	Part No.	Name	Qty	L
1	4700266938	Clamp	1	
2	4812101872	Bracket	1	
3	4700904703	Plain washer 13x24x4 mm	2	
4	4700500194	Hex. screw	2	
5	4700570007	Nut	2	
6	4700904231	Steel plain washer, 13x24x2 mm 300 HV	2	

4812100677 Cooling system module 4812100677 Cooling system module

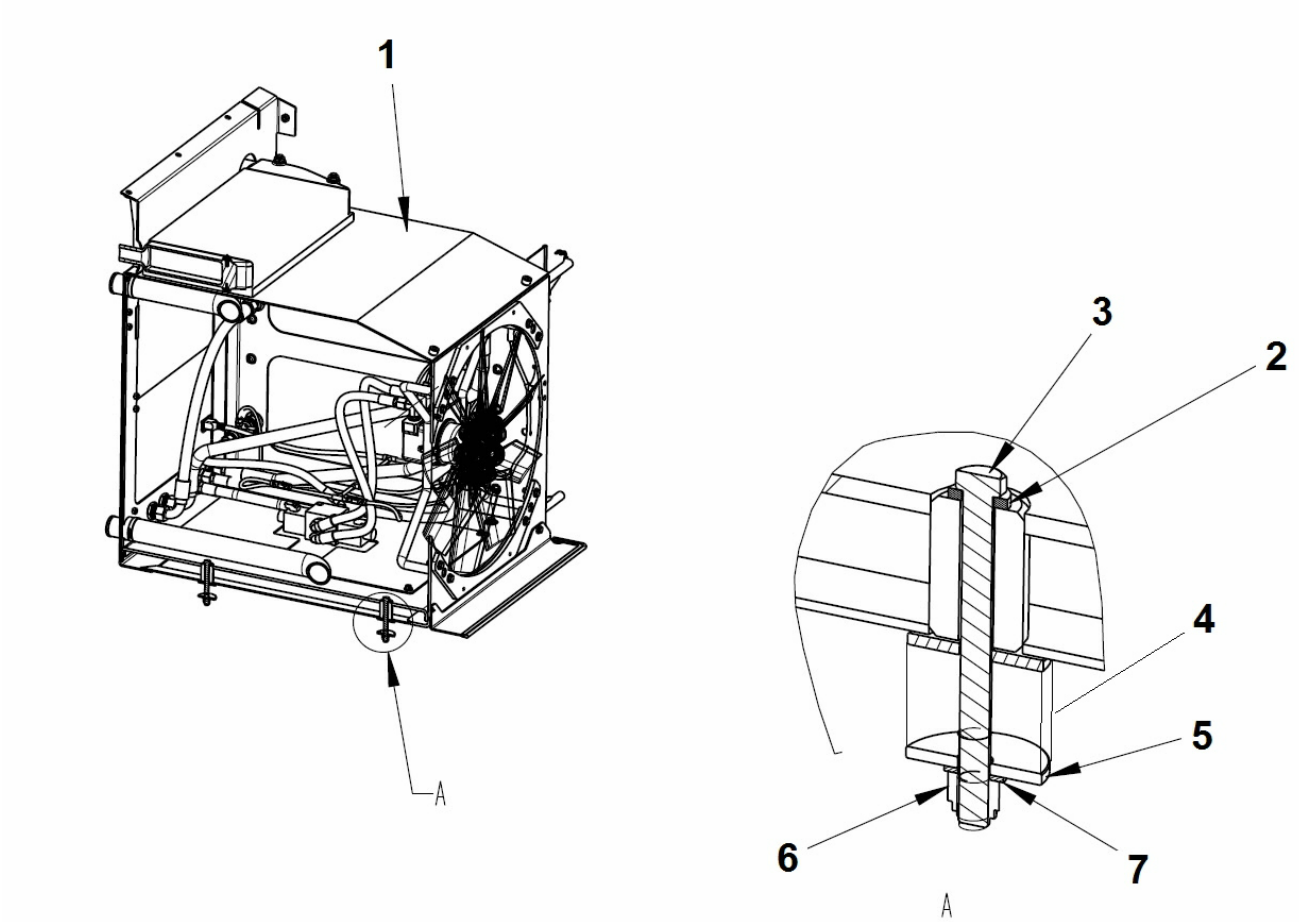

Item	Part No.	Name	Qty	L
1	4812100973	Cooling Assembly	1	
2	4700904703	Plain washer 13x24x4 mm	4	
3	4700500174	Hex. screw	4	
4	4700242451	Shock absorber	8	
5	4700242452	Washer	8	
6	4700586019	Lock nut, M12	4	
7	4700904231	Steel plain washer, 13x24x2 mm 300 HV	4	

4812100973 Cooling Assembly 4812100973 Cooling Assembly

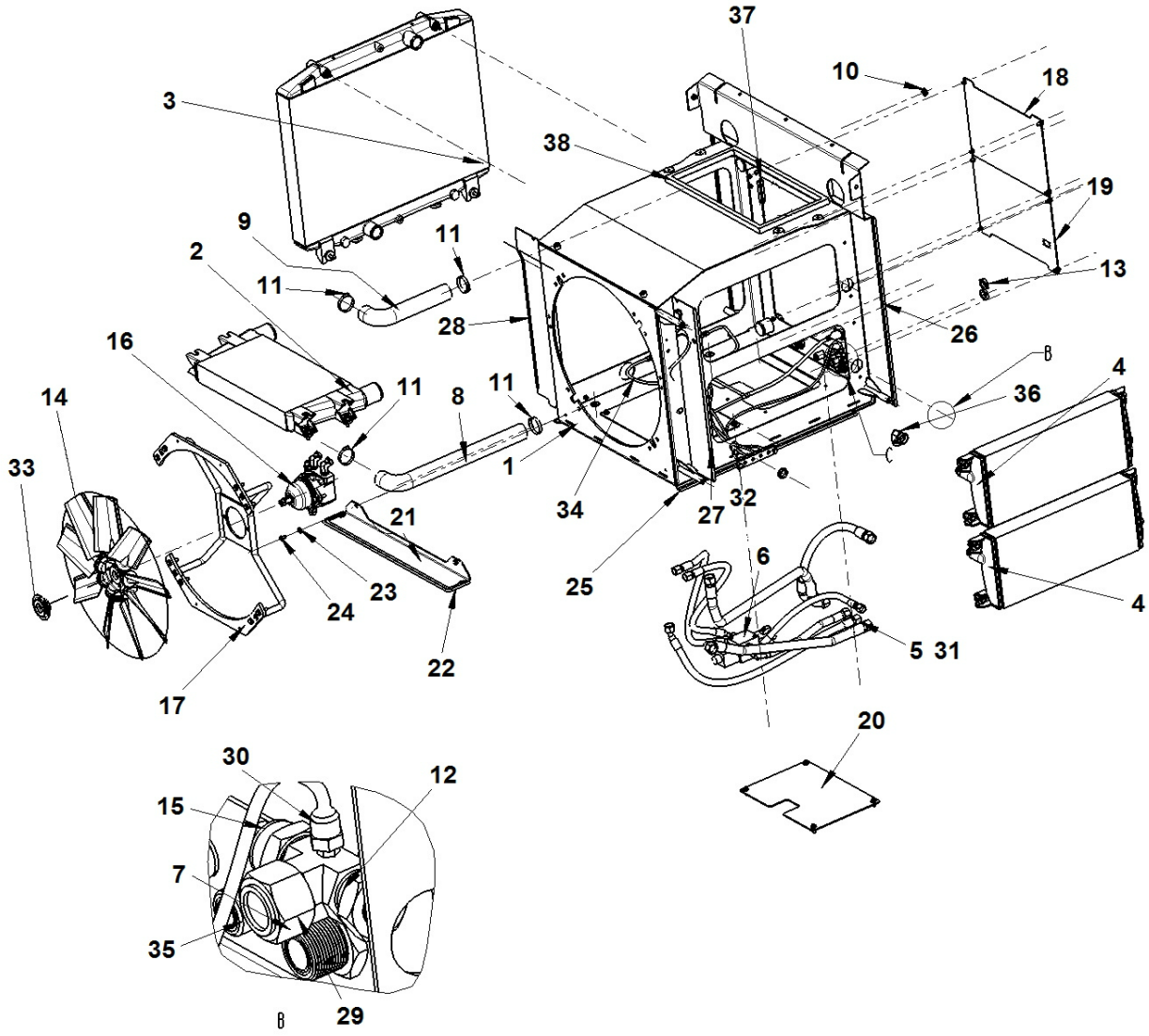

Item	Part No.	Name	Qty	L
1	4812100715	Cooler frame	1	
2	4812100979	CAC Module	1	
3	4812100981	Water cooler module	1	
4	4812100901	Oil Cooler Module	2	
5	4812100902	Cooling Hoses Kit	1	
6	4812100903	Reversing Valve Module	1	
7	4812112559	Bulkhead union	3	
8	4812100648	Cooling Hose	1	
9	4812100649	Cooling Hose	1	
10	4700909127	Grommet	1	
11	4700313023	Hose clamp	4	
12	4812101742	Adapter	2	
13	4700904581	Bulkhead union	2	
14	4812100750	Propeler	1	
15	4812100740	Reducer	1	
16	4812100905	Fan Drive Module	1	
17	4812100974	Hydraulic Motor Bracket	1	
18	4812100975	Cover module	1	
19	4812101358	Cover module	1	
20	4812100977	Cover module	2	
21	4812101692	Cover	1	
22	4700202056	Edge trim, 900 mm, 35.43 in.	1XL	
23	4700904557	Washer, 10.5x22x4 mm 300 HV	2	
24	4700900486	Screw	2	
25	4700202056	Edge trim, 900 mm, 35.43 in.	1XL	
26	4700202056	Edge trim, 900 mm, 35.43 in.	1XL	
27	4700246947	Edge trim	1XL	
28	4700246947	Edge trim	1XL	
29	4812101718	Cap	2	
30	4700910161	Measuring nipple	2	
31	4812101753	Measure kit	1	
32	4700929110	Lead through	1	
33	4812101892	Flange	1	
34	4812100848	Wiring harness cooler box	1	
35	4700904580	Adapter	1	
36	4700904495	Elbow 90°	1	
37	4700202057	Rubber edge trim	1XL	

Item	Part No.	Name	Qty	L
38	4700202042	Rubber strip	1XL	

Comments for Page: 4812100973 Cooling Assembly

(L)OCAL REMARKS

A | en_US | L = 0,850 m

B | en_US | L = 1,795 m

C | en_US | L = 1,750 m

D | en_US | L = 0,794

E | en_US | L = 0,720 m

4812100973 Cooling Assembly 4812100848 Wiring harness cooler box

This page intentionally left blank

1

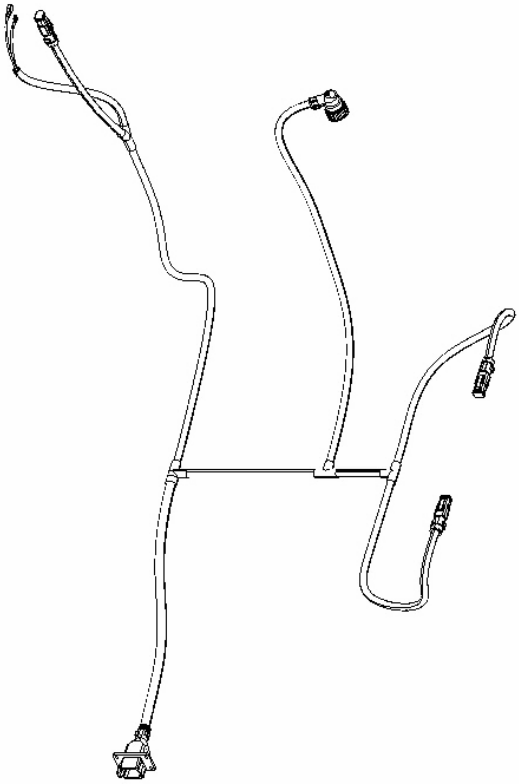

Item	Part No.	Name	Qty	L
1	4812100848	Wiring harness cooler box	1	

4812100973 Cooling Assembly 4812101753 Measure kit

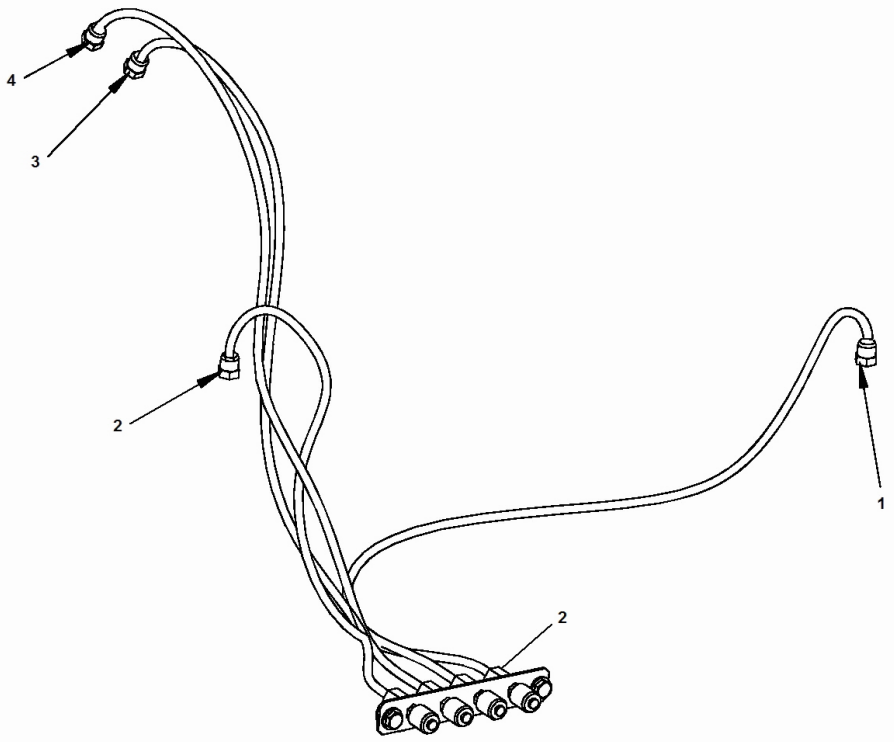

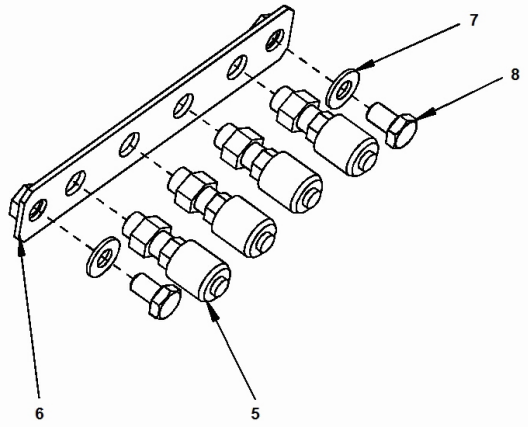

Item	Part No.	Name	Qty	L
1	4812101754	Hose	1	
2	4700249168	Hose	1	
3	4812101754	Hose	1	
4	4812101754	Hose	1	
5	4700346022	Measuring nipple	4	
6	4812101750	Bracket	1	
7	4700904230	Washer	2	
8	4700500043	Hex. screw	2	

4812100973 Cooling Assembly 4812100977 Cover module

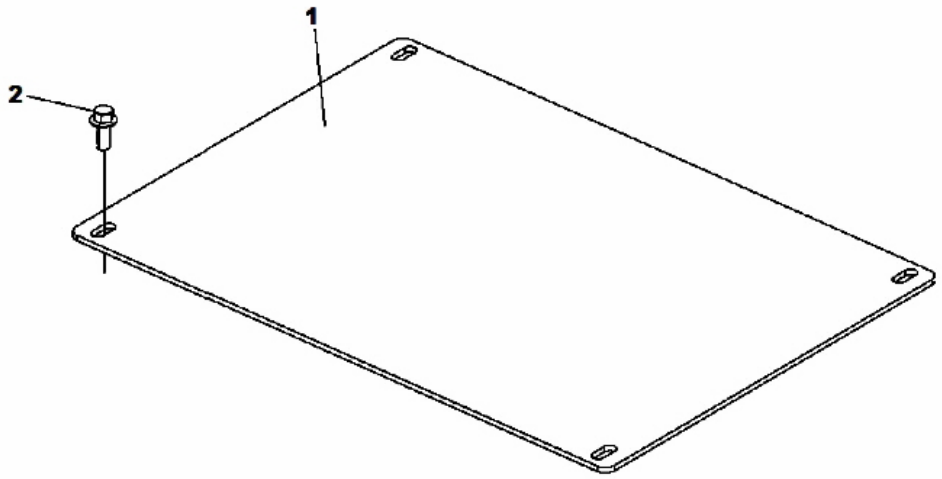

Item	Part No.	Name	Qty	L
1	4812100538	Cover	1	
2	4700500509	Screw	4	

4812100973 Cooling Assembly 4812101358 Cover module

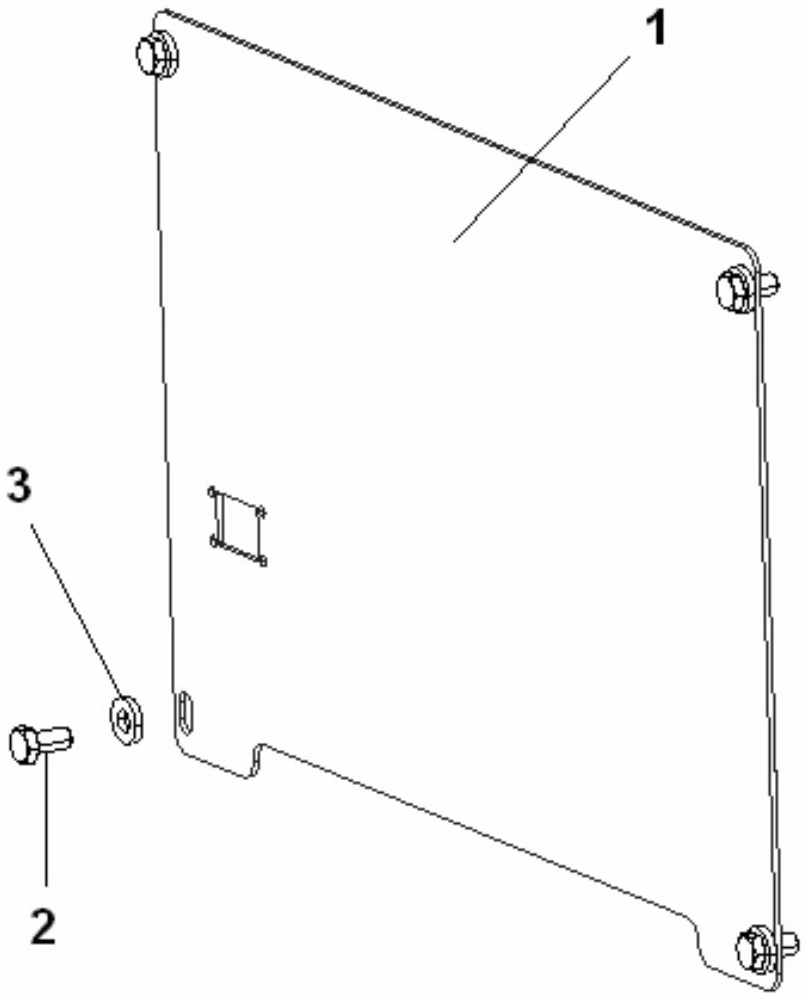

Item	Part No.	Name	Qty	L
1	4812101356	Cover	1	
2	4700500048	Screw	4	
3	4700904557	Washer, 10.5x22x4 mm 300 HV	4	

4812100973 Cooling Assembly 4812100975 Cover module

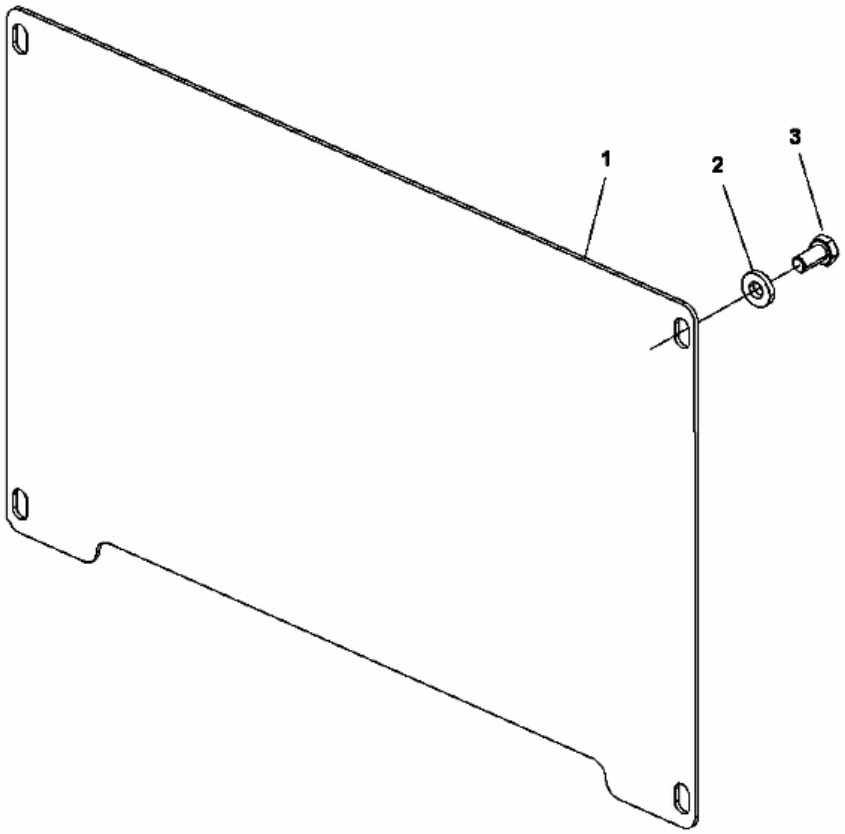

Item	Part No.	Name	Qty	L
1	4812100659	Cover	1	
2	4700904557	Washer, 10.5x22x4 mm 300 HV	4	
3	4700500048	Screw	4	

4812100973 Cooling Assembly 4812100974 Hydraulic Motor Bracket

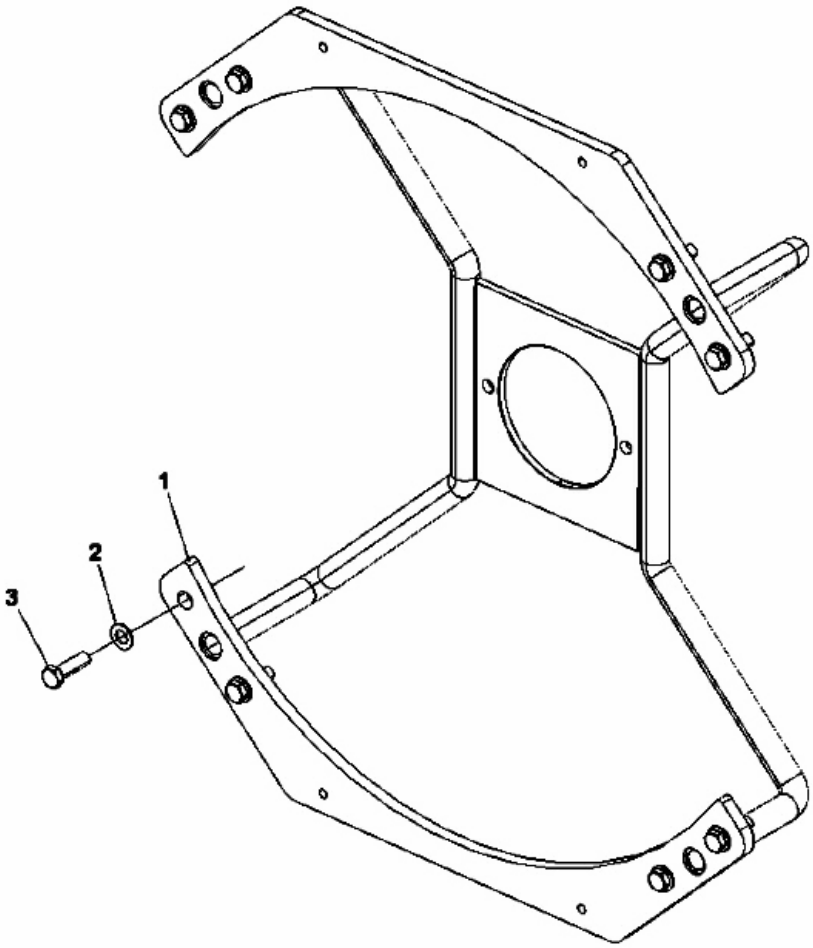

Item	Part No.	Name	Qty	L
1	4812100552	Hydraulic motor support	1	
2	4700904231	Steel plain washer, 13x24x2 mm 300 HV	8	
3	4700947689	Hex. head screw M12	8	

4812100973 Cooling Assembly 4812100905 Fan Drive Module

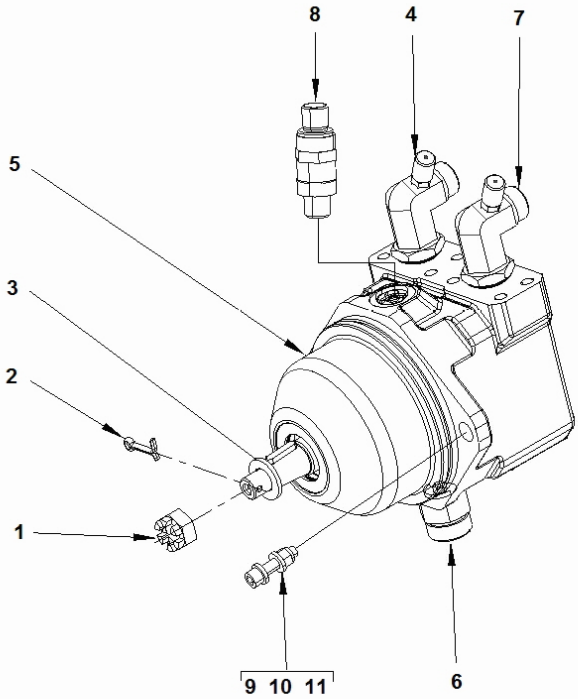

Item	Part No.	Name	Qty	L
1	4700170526	Castle nut	1	
2	4700630014	Cotter pin	1	
3	4700904232	Steel plain washer	1	
4	4700910161	Measuring nipple	2	
5	4812100668	Hydraulic motor (Fan drive)	1	
6	4812101255	Straight adapter	1	
7	4812101719	Elbow 90°	2	
8	4812101853	Sensor kit	1	
9	4700904703	Plain washer 13x24x4 mm	4	
10	4700508102	Screw M12-1,75x50 12.9	2	
11	4700586019	Lock nut, M12	2	

4812100973 Cooling Assembly 4812100903 Reversing Valve Module

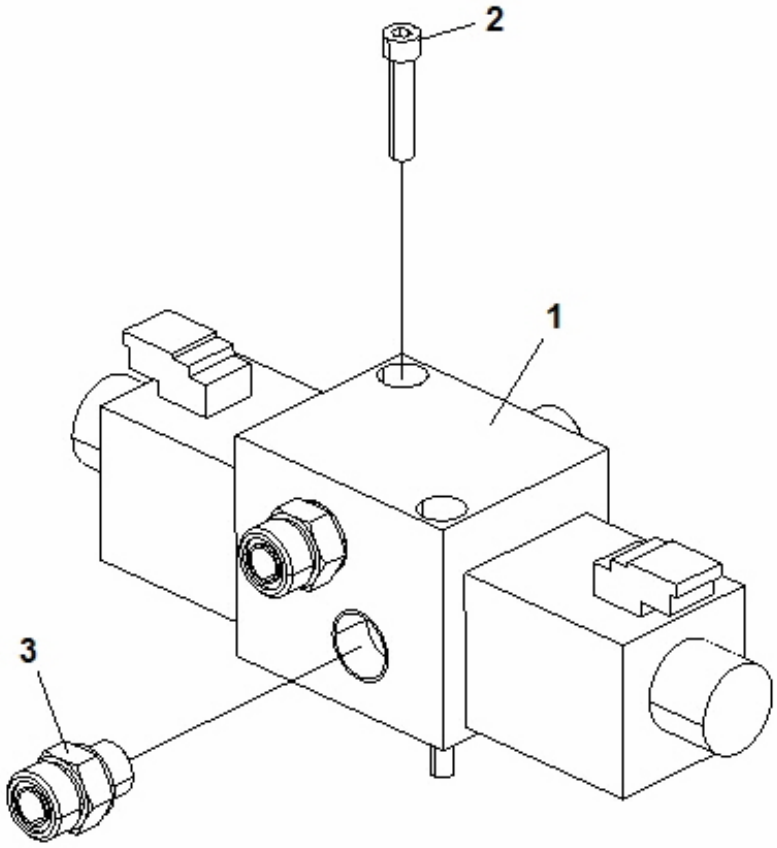

Item	Part No.	Name	Qty	L
1	4812100664	Valve	1	
2	4700508057	Screw	2	
3	4700792074	Straight connector	4	

4812100973 Cooling Assembly 4812100902 Cooling Hoses Kit

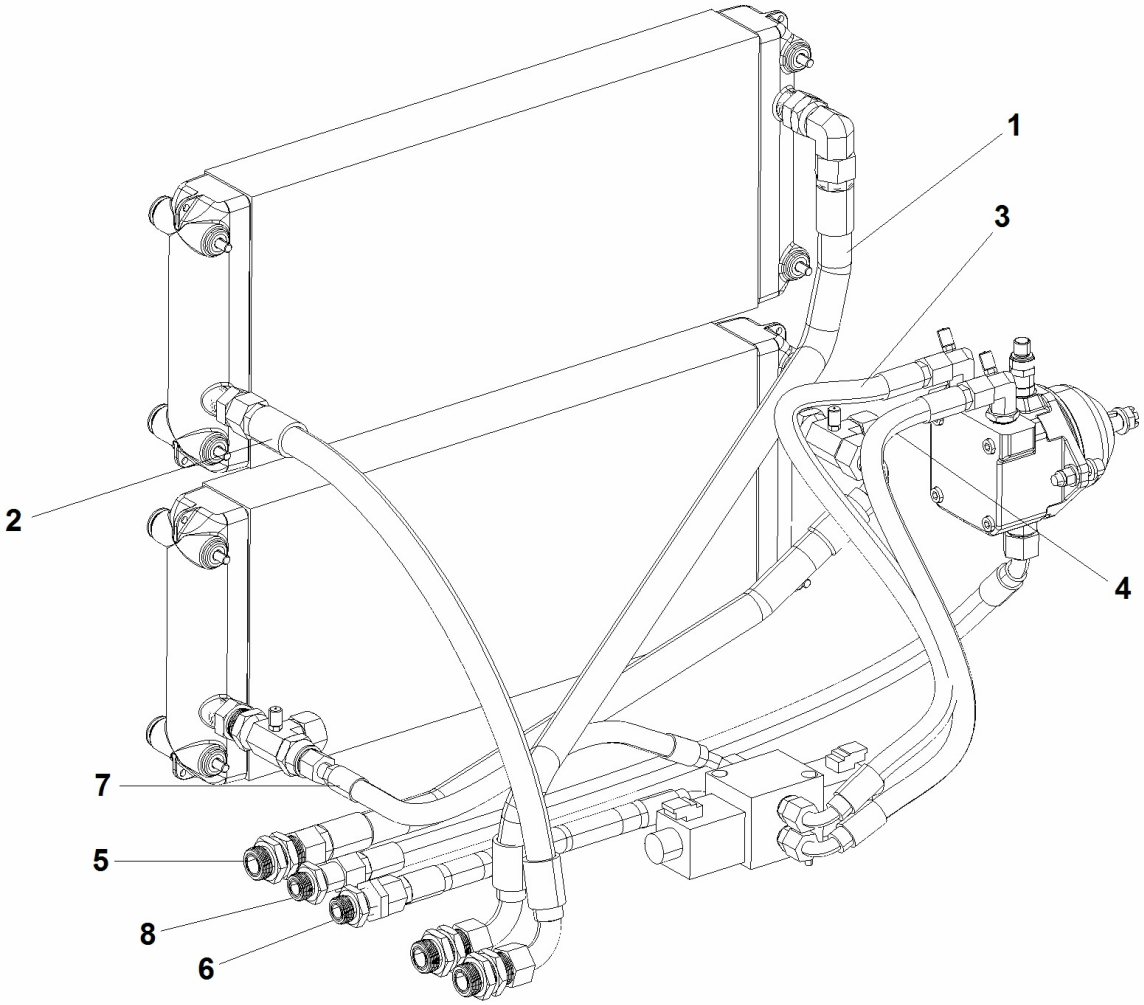

Item	Part No.	Name	Qty	L
1	4812101191	Hydraulic hose	1	
2	4812101795	Hydraulic hose	1	
3	4812101193	Hydraulic hose	1	
4	4812101193	Hydraulic hose	1	
5	4700484163	Hydraulic hose	1	
6	4812101195	Hydraulic hose	1	
7	4811000391	Hydraulic hose	1	
8	4700484315	Hydraulic hose	1	

4812100973 Cooling Assembly 4812100901 Oil Cooler Module

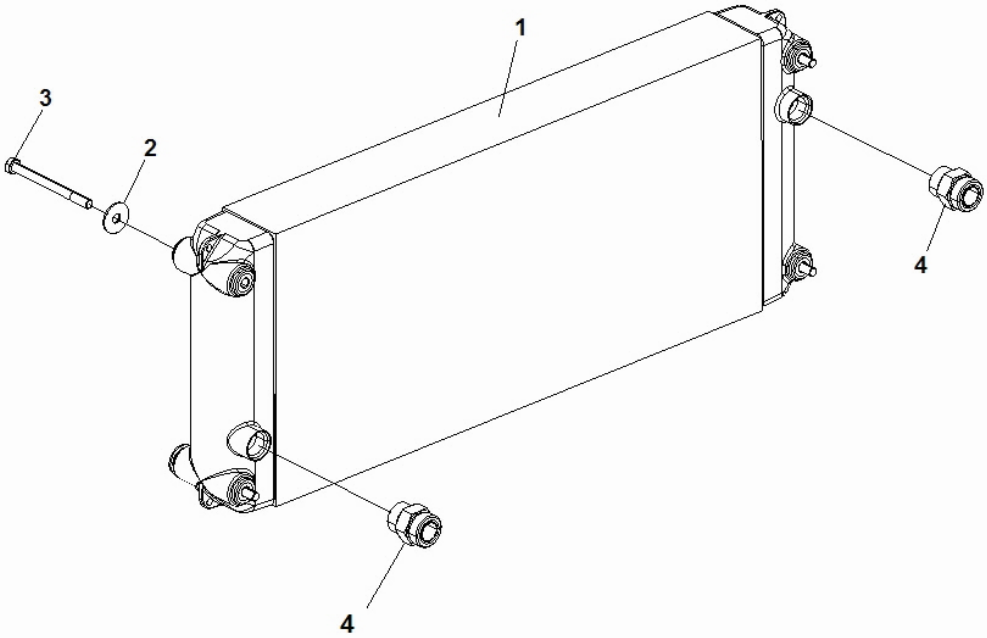

Item	Part No.	Name	Qty	L
1	4812100724	Cooler	1	
2	4700615061	Steel plain washer	4	
3	4700500055	Screw	4	
4	4700792339	Adapter	2	

4812100973 Cooling Assembly 4812100981 Water cooler module

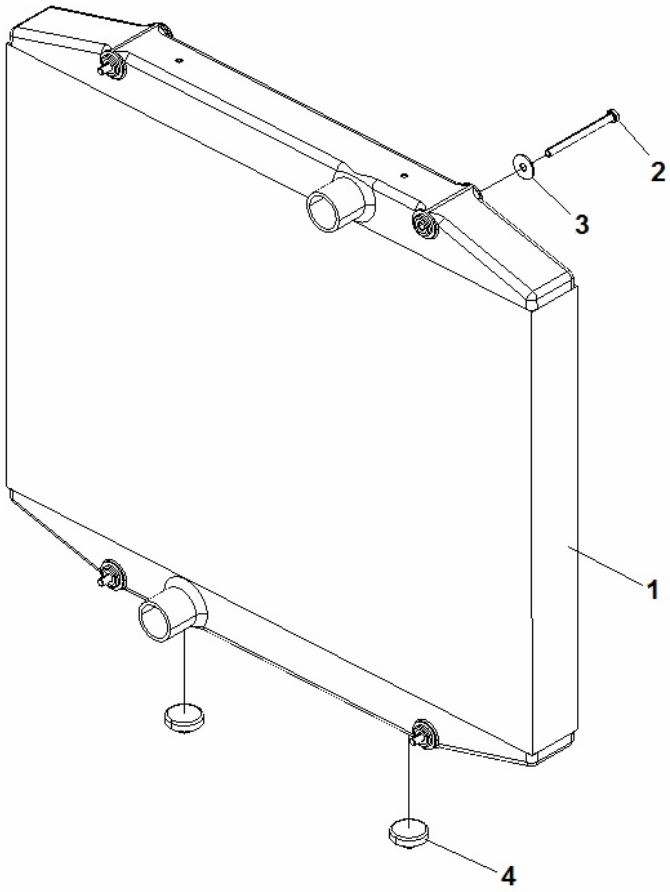

Item	Part No.	Name	Qty	L
1	4812100722	Water cooler	1	
2	4700500055	Screw	4	
3	4700615061	Steel plain washer	4	
4	4812100603	Shock absorber	2	

4812100973 Cooling Assembly 4812100979 CAC Module

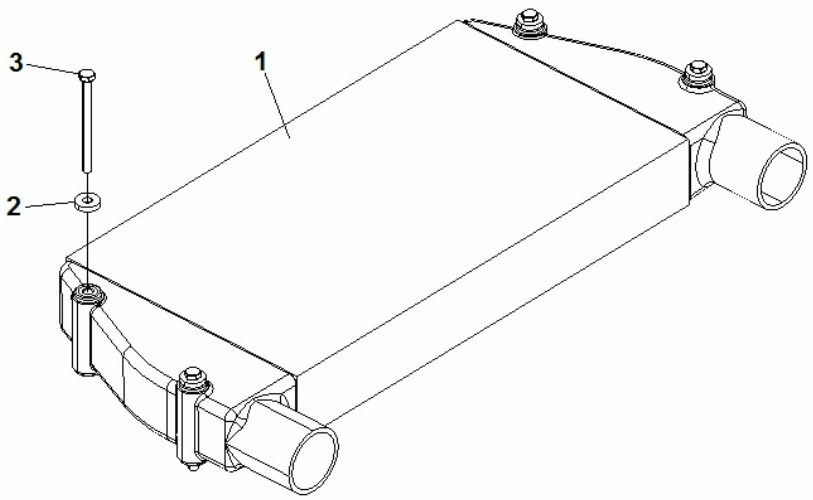

Item	Part No.	Name	Qty	L
1	4812100723	CAC	1	
2	4700904230	Washer	4	
3	4700500091	Screw	4	

Drive 4812100940 Rim and tire assembly

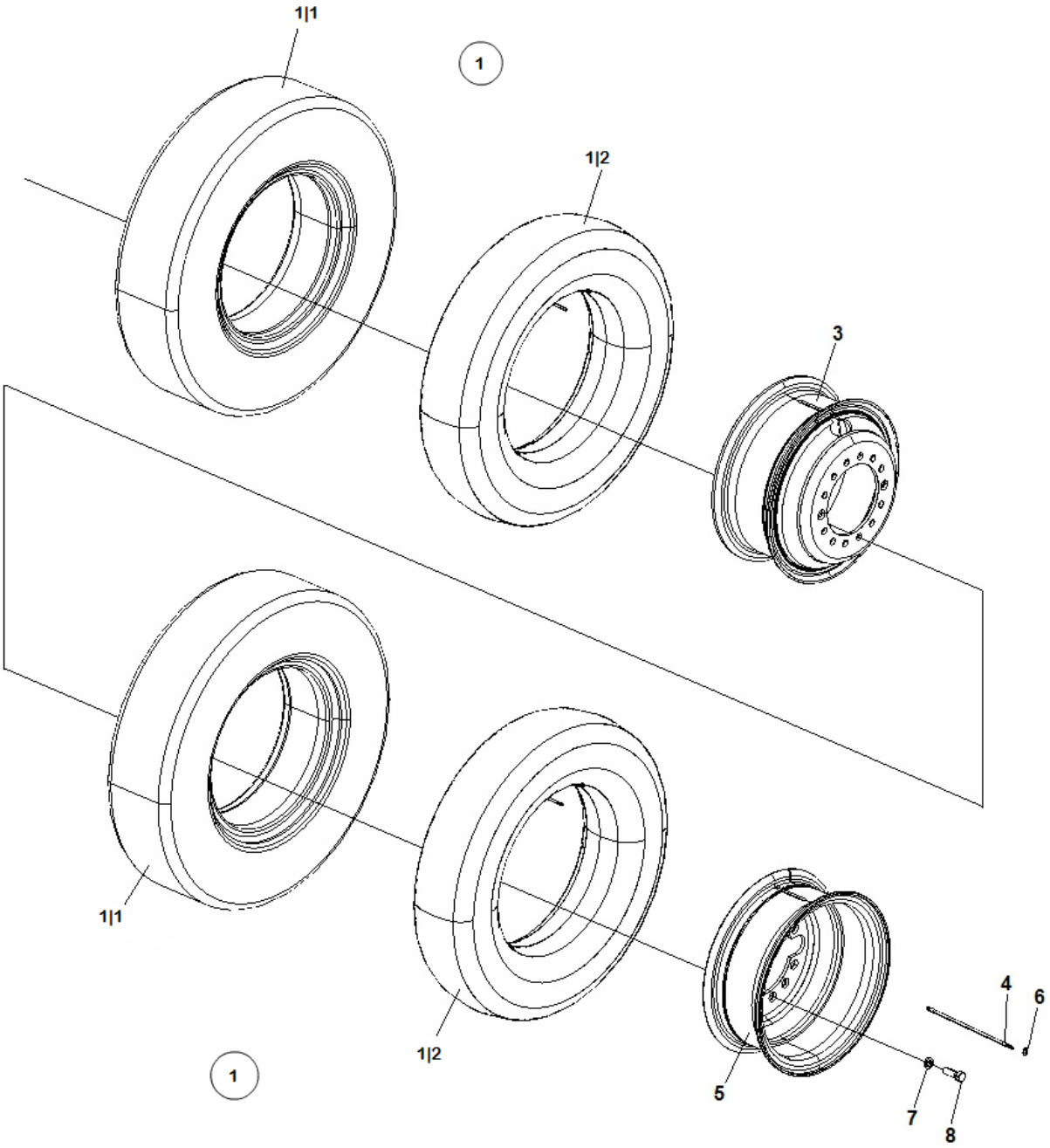

Item	Part No.	Name	Qty	L
1	4700269483	Tyre, air tube and protection	8	
.1|1	4700401104	Tire	8	
.1|2	4700240901	Air tube	8	
3	4812316095	Internal Wheel	4	
4	4700194846	Flexible Extension	4	
5	4812316096	External Wheel	4	
6	4700313068	Clamp	4	
7	4700199516	Washer	56	
8	4700198978	Screw	56	

Drive 4812100920 Drum kit, STD

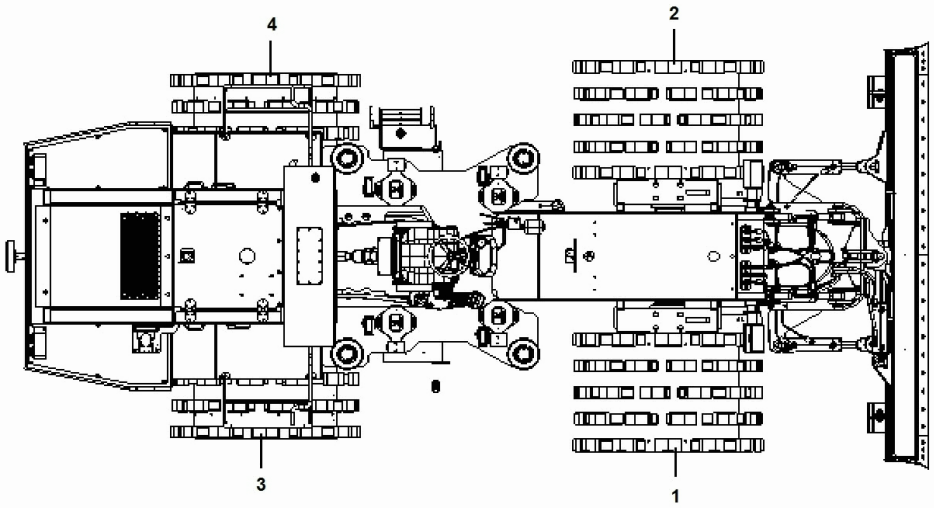

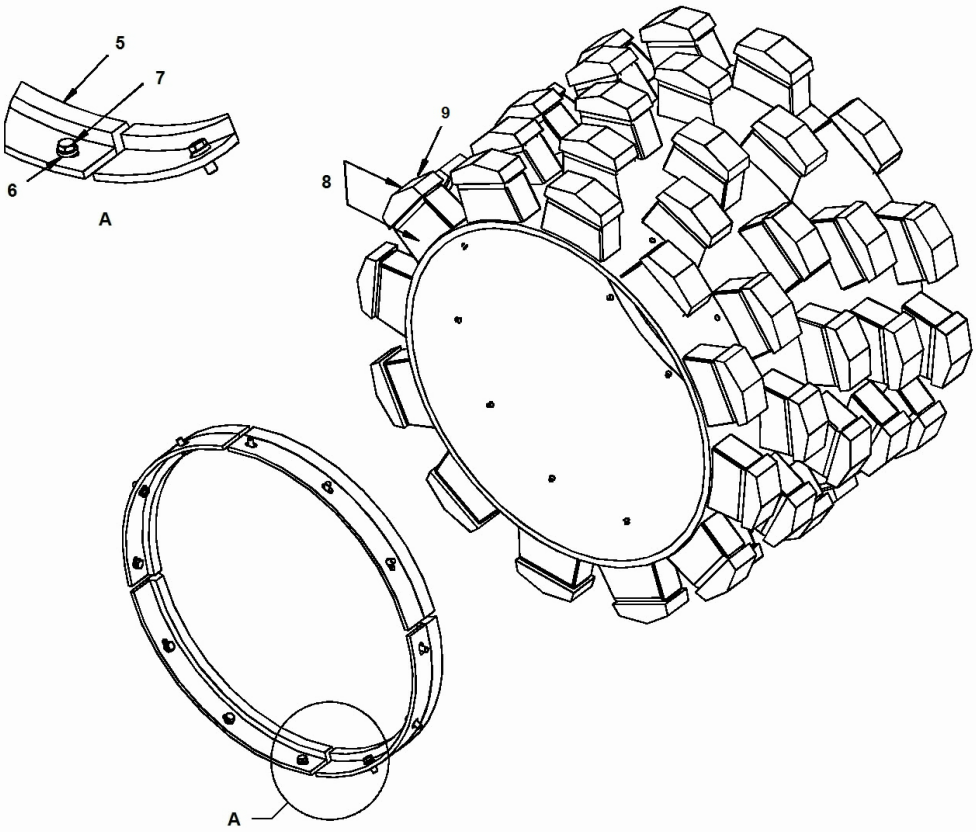

Item	Part No.	Name	Qty	L
1	4812316114	Drum frontal, right	1	
2	4812316115	Drum frontal, left	1	
3	4812316116	Drum rear, right	1	
4	4812316117	Drum rear, left	1	
5	4812316118	Lock	4	
6	4700904558	Washer, 17x30x6 mm 300 HV	12	
7	4700500093	Hex. screw	12	
8	4700240833	Padfoot	60	
9	4700240834	Foot tip	60	

Drive 4812101238 Drum kit 60 PTN

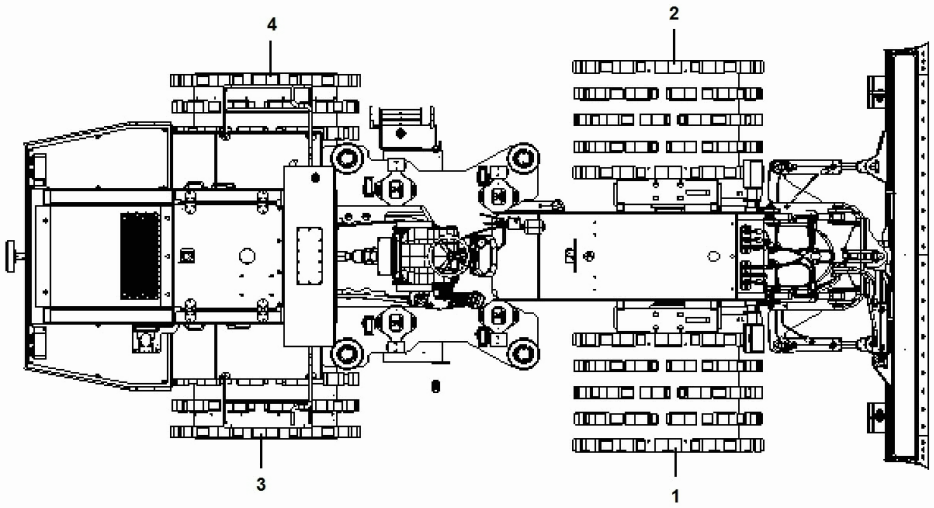

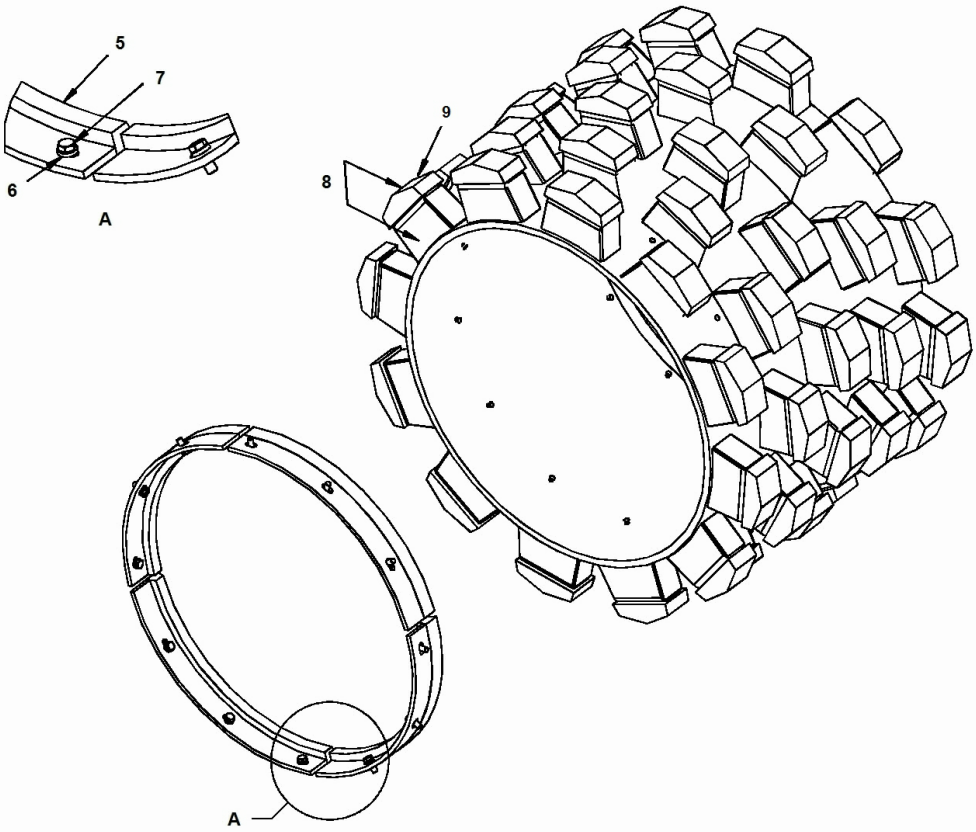

Item	Part No.	Name	Qty	L
1	4812101239	Drum front right	1	
2	4812101240	Drum front left	1	
3	4812101241	Drum rear right	1	
4	4812101242	Drum rear left	1	
5	4812100768	Lock	4	
6	4700904558	Washer, 17x30x6 mm 300 HV	12	
7	4700500093	Hex. screw	12	
8	4700268709	Padfoot PTN	60	
9	4700268710	Foot tip	60	

Drive 4812101233 Drum kit 60 PUSA

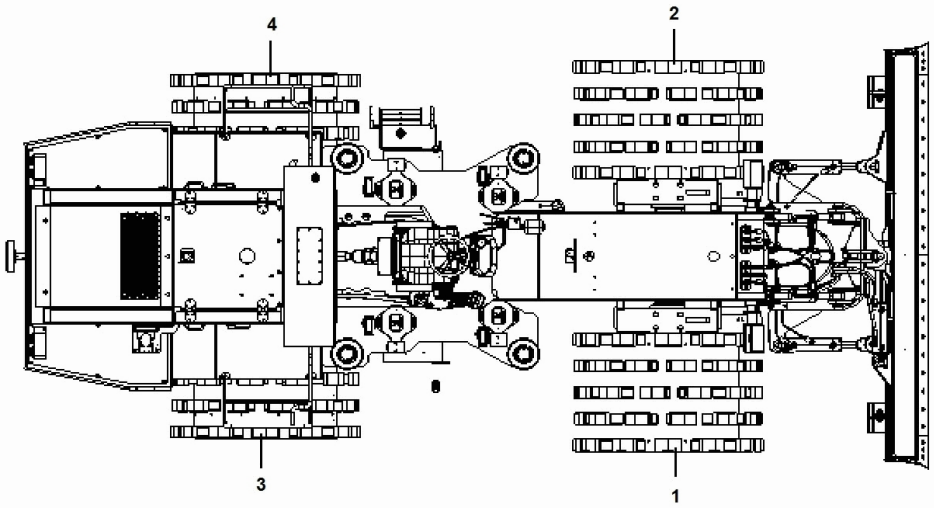

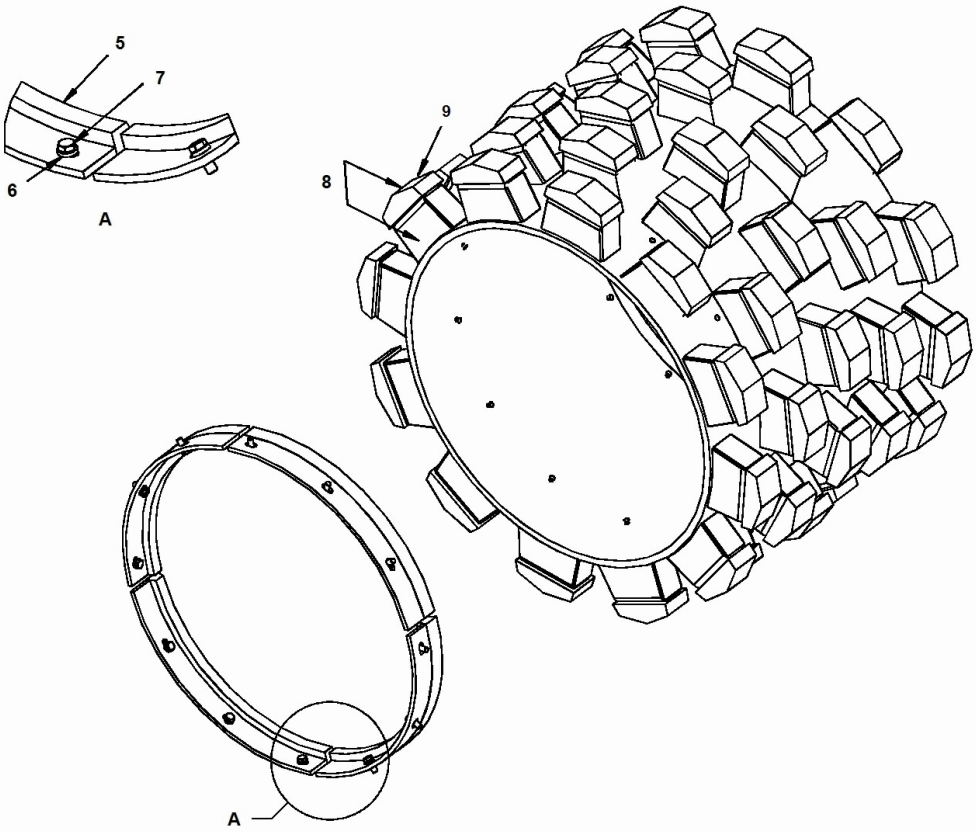

Item	Part No.	Name	Qty	L
1	4812101234	Drum front right	1	
2	4812101235	Drum front left	1	
3	4812101236	Drum rear right	1	
4	4812101237'	Drum rear left	1	
5	4812100768	Lock	4	
6	4700904558	Washer, 17x30x6 mm 300 HV	12	
7	4700500093	Hex. screw	12	
8	4700265169	Padfoot	60	
9	4700265152	Foot tip	60	

4812100930 Driven System 4812100930 Driven System

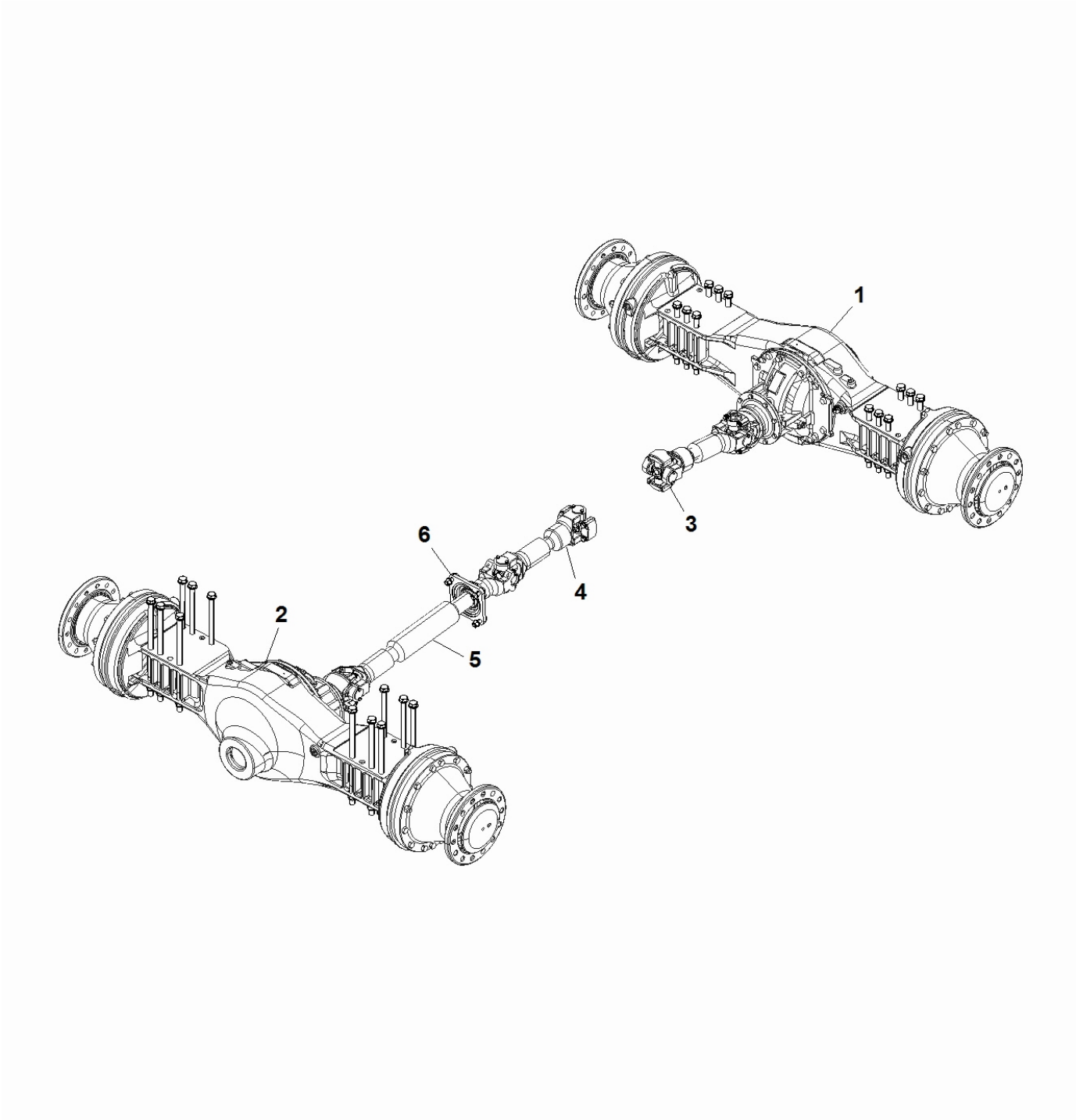

Item	Part No.	Name	Qty	L
1	4812100945	Driven Axle Module	1	
2	4812100946	Driven Axle Module	1	
3	4812100948	Cardan Shaft Module	1	
4	4812100949	Cardan Shaft Module	1	
5	4812100951	Cardan Shaft Module	1	
6	4812100952	Bearing Module	1	

4812100930 Driven System 4812100952 Bearing Module

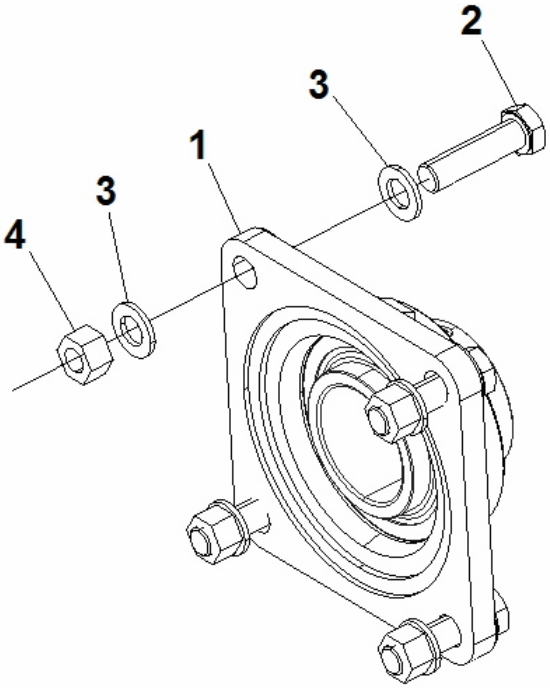

Item	Part No.	Name	Qty	L
1	4700198675	Intermediate bearing	1	
2	4700500270	Screw M16x60 10,9	4	
3	4700904232	Steel plain washer	8	
4	4700902382	Nut	4	

4812100930 Driven System 4812100951 Cardan Shaft Module

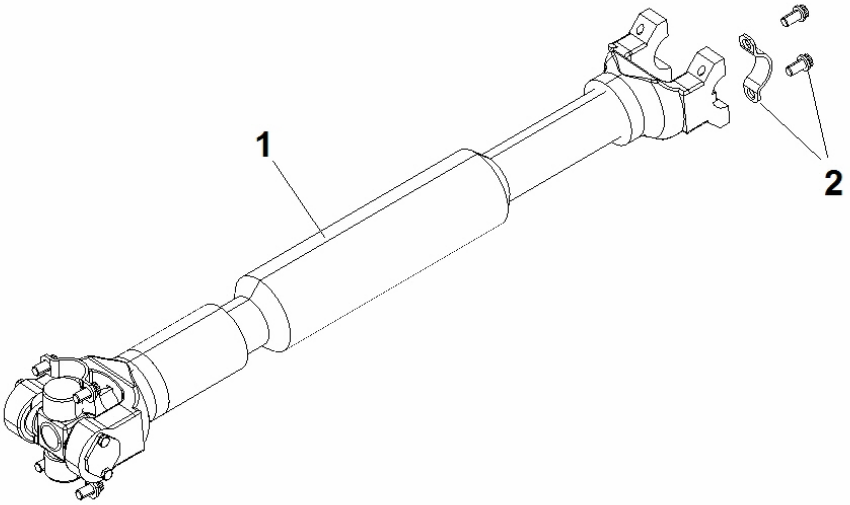

Item	Part No.	Name	Qty	L
1	4700198672	Front Drive Shaft	1	
2	4700198781	Clamp	4	

4812100930 Driven System 4812100949 Cardan Shaft Module

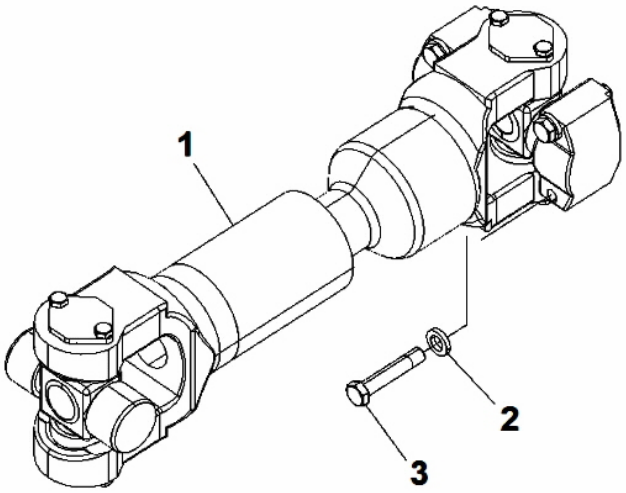

Item	Part No.	Name	Qty	L
1	4700198674	Rear Drive shaft	1	
2	4700240536	Washer	4	
3	4700248712	Screw	4	

4812100930 Driven System 4812100948 Cardan Shaft Module

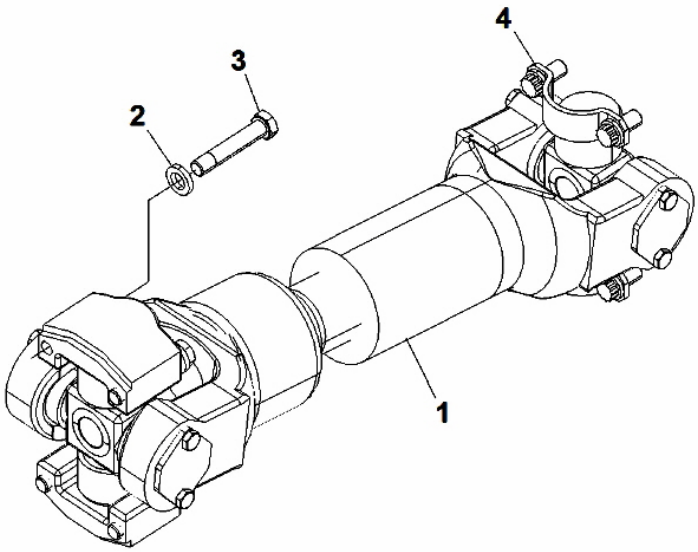

Item	Part No.	Name	Qty	L
1	4700198674	Rear Drive shaft	1	
2	4700240536	Washer	4	
3	4700248712	Screw	4	
4	4700198781	Clamp	2	

4812100930 Driven System 4812100946 Driven Axle Module

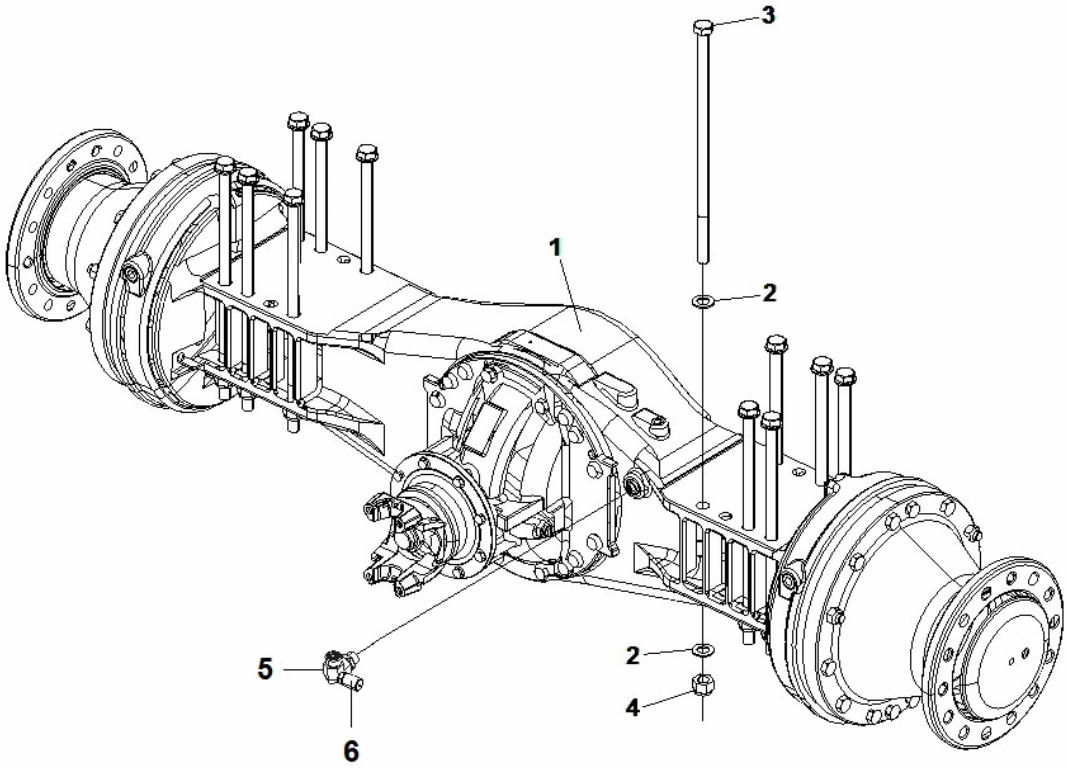

Item	Part No.	Name	Qty	L
1	4700198966	Planetary axle	1	
2	4700904260	Washer	24	
3	4700198975	Screw	12	
4	4700198976	Lock nut	12	
5	4812101759	Elbow 90	1	
6	4700910161	Measuring nipple	1	

4812100945 Driven Axle Module 4812100945 Driven Axle Module

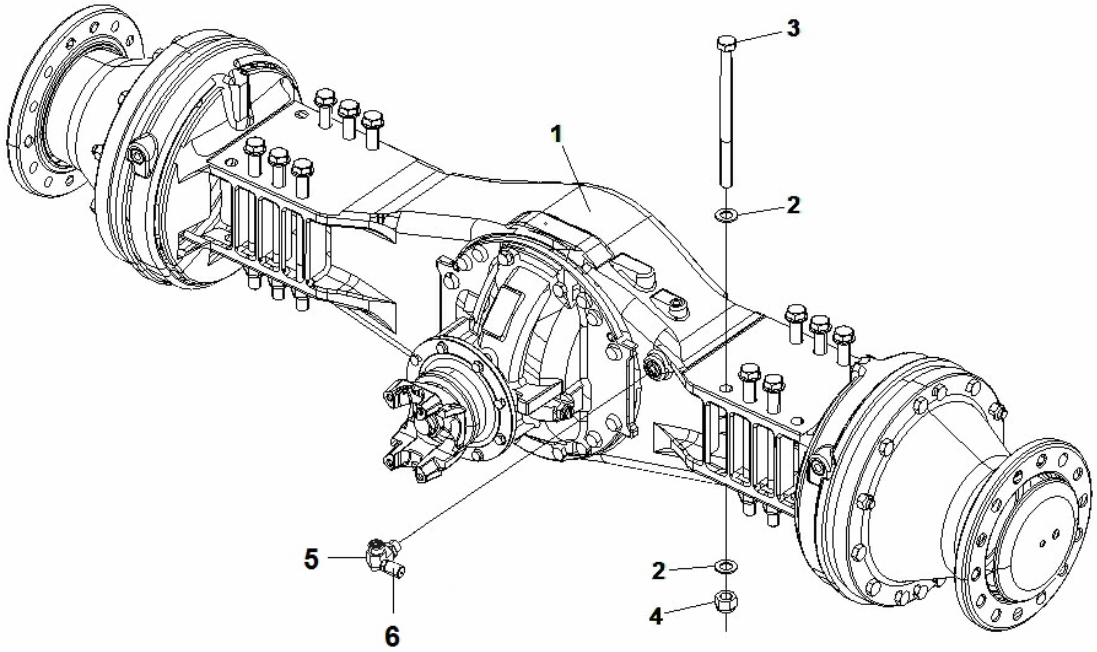

Item	Part No.	Name	Qty	L
1	4700198966	Planetary axle	1	
2	4700904260	Washer	24	
3	4700198974	Screw	12	
4	4700198976	Lock nut	12	
5	4812101759	Elbow 90	1	
6	4700910161	Measuring nipple	1	

4812100945 Driven Axle Module Carrier group

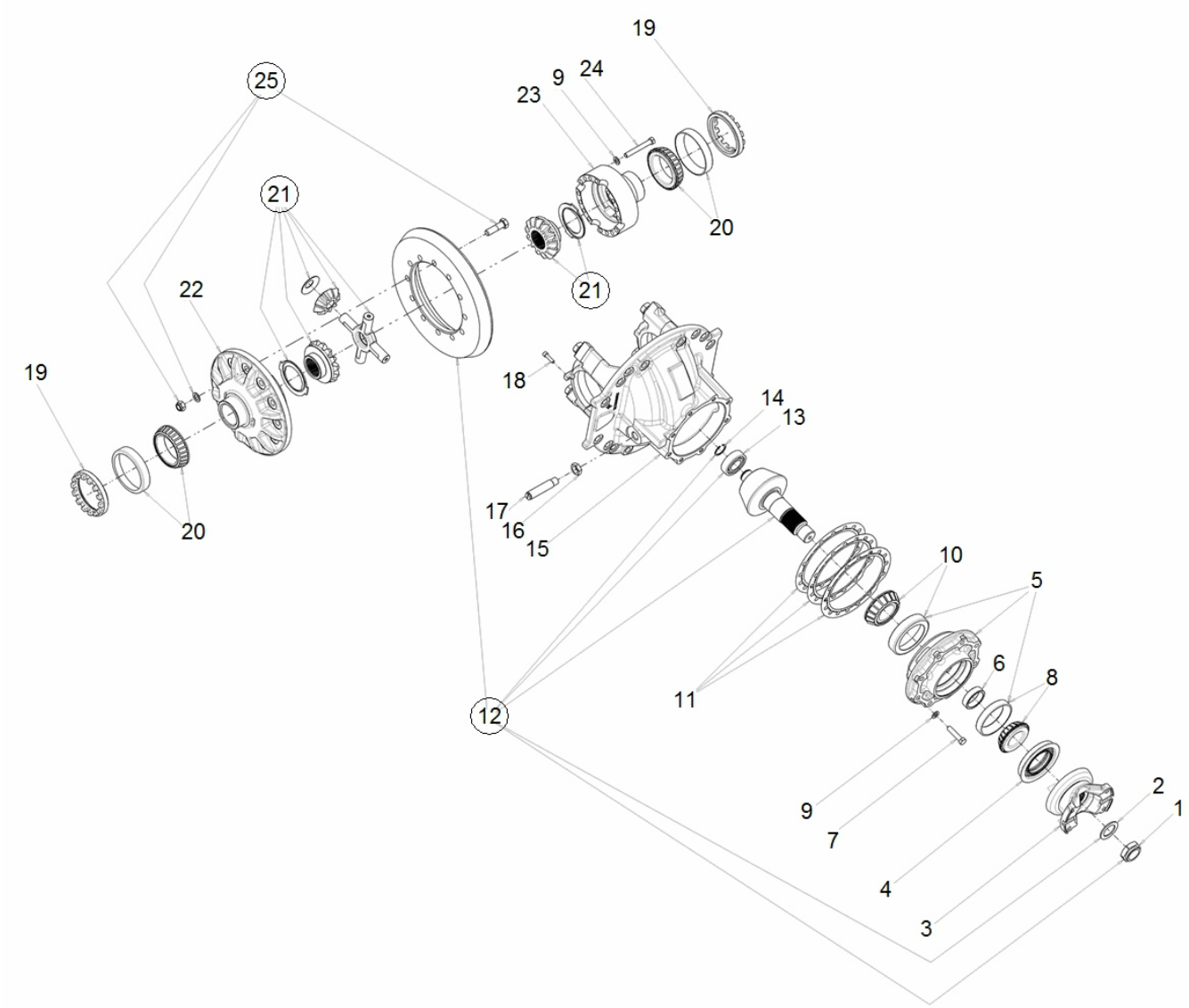

Item	Part No.	Name	Qty	L
1	4812100248	Nut	1	
2	4812100249	Washer	1	
3	-	Yoke, assembly	1	
4	4812100251	Seal oil	1	
5	4812100252	Cage assembly	1	
6	4812100253	Shim	1	
7	-	Screw	8	
8	4812100255	Bearing	1	
9	-	Washer	16	
10	4812100257	Bearing	1	
11	-	Shim	1	
11	4812100258	Shim, kit	1	
.11	-	Shim	2	
.11	-	Shim	1	
.11	-	Shim	3	
.11	-	Shim	2	
.11	-	Shim	1	
.11	-	Shim	3	
.11	-	Shim	1	
11	-	Shim	1	
11	-	Shim	2	
11	-	Shim	3	
12	-	Gear set	1	
12	4812100259	Gear set	1	
.12	-	Gear set	1	
13	4812100260	Bearing roller	1	
14	4812100261	Snap ring	1	
15	4812100262	Carrier and cap assembly	1	
16	-	Nut	1	
17	-	Screw thrust	1	
18	-	Screw	2	
19	-	Ring	2	
20	4812100267	Bearing	2	
21	-	Washer thrust	2	
21	4812100268	Differential kit	1	
.21	-	Gear differential side	2	
.21	-	Washer thrust	2	

Item	Part No.	Name	Qty	L
.21	-	Spider differential	1	
.21	-	Washer thrust	2	
.21	-	Pinion	4	
.21	-	Washer thrust	1	
.21	-	Washer thrust	4	
.21	-	Pinion	4	
.21	-	Washer thrust	4	
22	-	Case differential, flange	1	
23	-	Case differential, plain	1	
24	-	Screw	16	
25	-	Screw	12	
25	-	Kit hardware	1	
.25	-	Washer	12	
.25	-	Screw	12	
.25	-	Nut	12	
.25	-	Washer	12	
.25	-	Nut	12	
27	-	null	1	

4812100945 Driven Axle Module Housing group

This page intentionally left blank

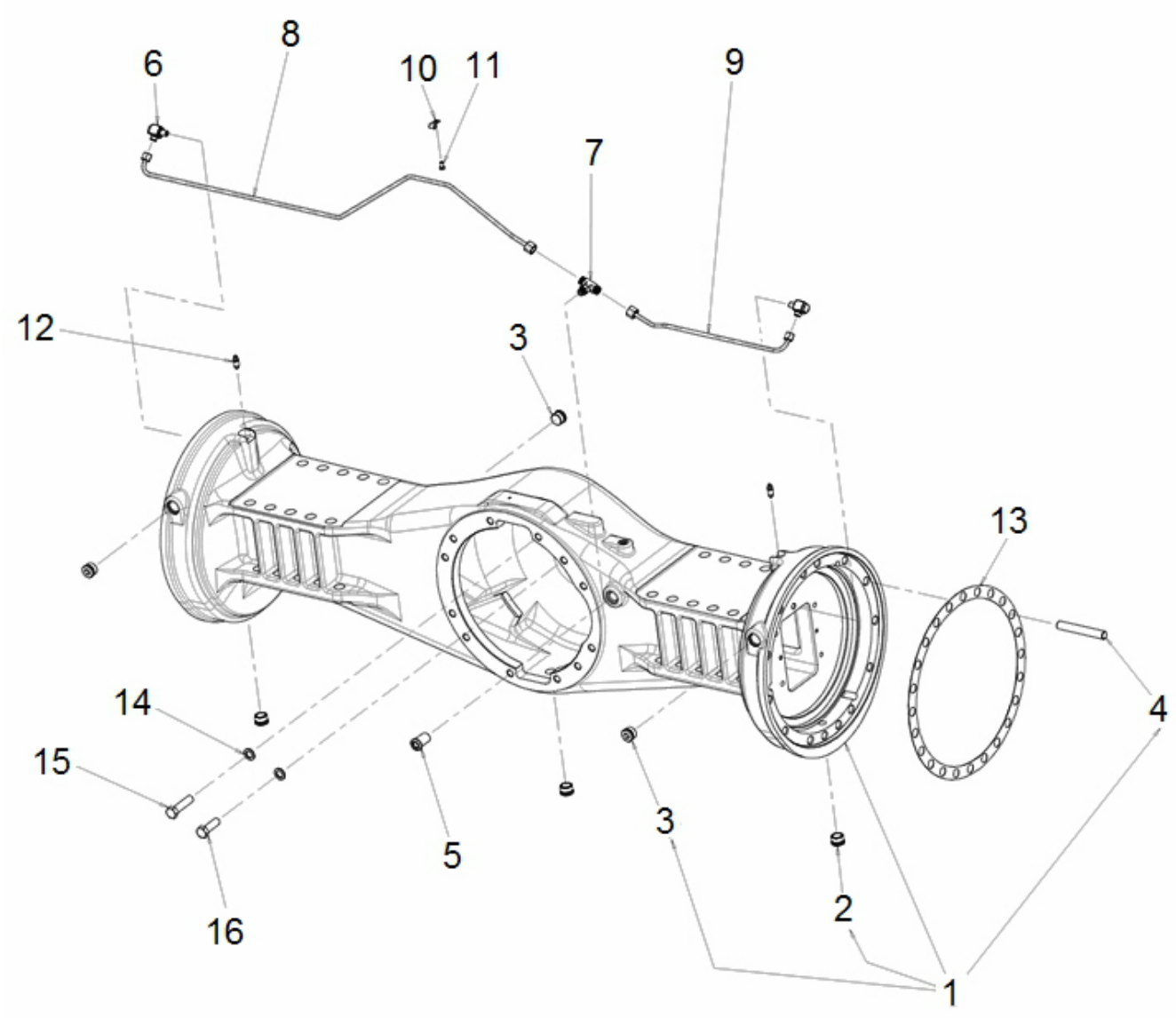
8
6
10
11
9
7
12
3
13
14
4
15
3
5
2
16
1

Item	Part No.	Name	Qty	L
1	-	Axle housing	1	
2	4812100274	Magnetic plug	3	
3	4812100275	Plug fill	1	
4	-	Flat gasket	4	
5	4812100277	Brake fitting	1	
6	-	Connector fitting	2	
7	-	Tee fitting	1	
8	-	Tube	1	
9	-	Tube	1	
10	-	Clip	1	
11	-	Screw	1	
12	-	Bleeder	2	
13	4812100285	Shim	2	
14	-	Washer	12	
15	-	Screw	4	
16	-	Screw	8	

4812100945 Driven Axle Module Wheel end group

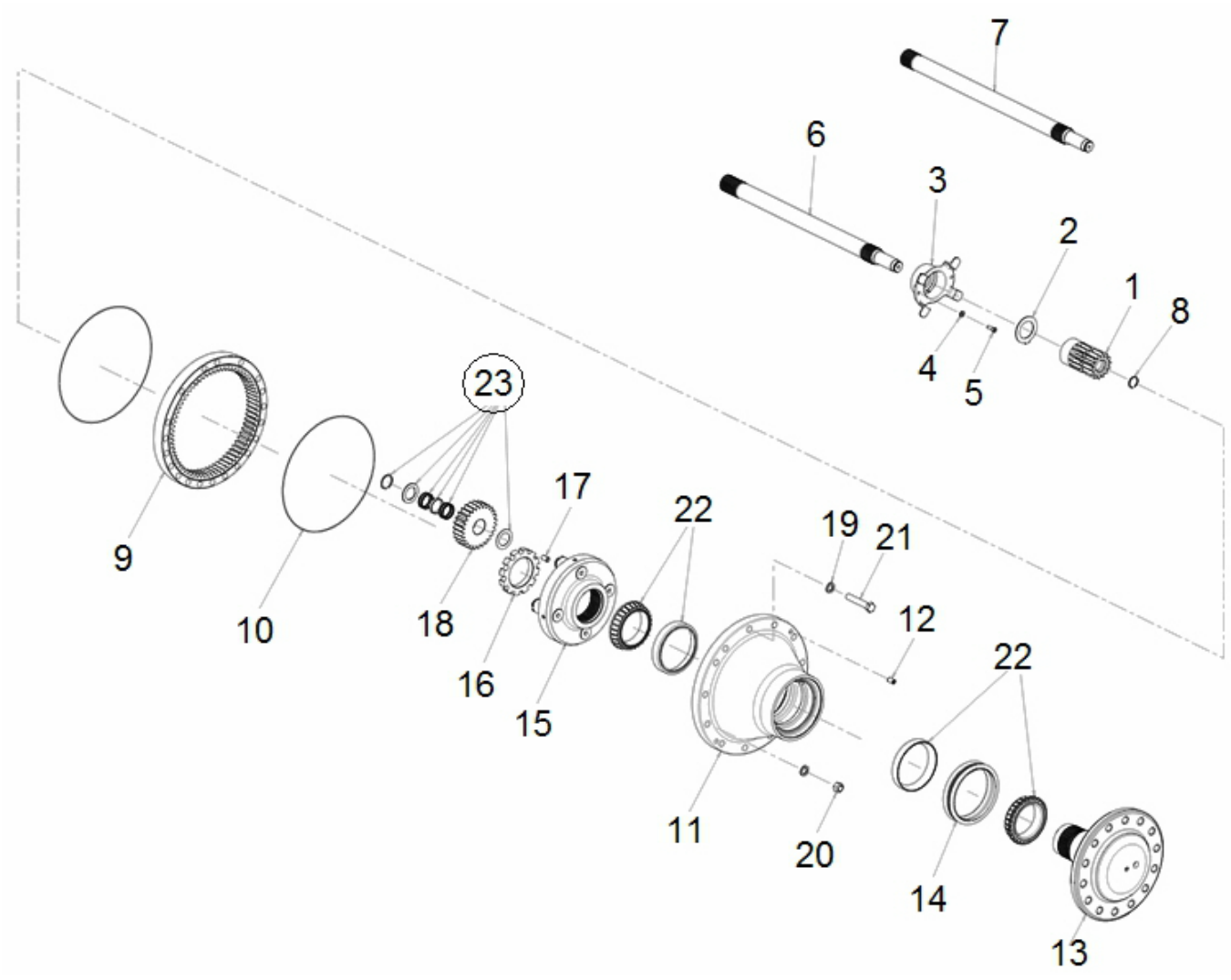

Item	Part No.	Name	Qty	L
1	4812100218	Gear planetary sun	2	
2	4812100219	Washer thrust	2	
3	4812100220	Housing spring	2	
4	4812100221	Washer	4	
5	4812100222	Screw	4	
6	4812100223	Shaft axle	1	
7	4812100224	Shaft axle	1	
8	4812100225	Snap ring	2	
9	4812100226	Gear planetary ring	2	
10	4812100227	O-ring	4	
11	-	Cage bearing	2	
12	4812100229	Set screw	4	
13	4812100230	Shaft output	2	
14	4812100231	Seal assy	2	
15	-	Flange - Planetary spider	2	
15	4812100232	Spider assy	2	
.15	-	Planet - Pinion shaft	8	
.15	-	Flange - Planetary spider	2	
.15	-	Set screw	8	
.15	-	Planet - Pinion shaft	8	
.15	-	Set screw	8	
16	4812100233	Nut	2	
17	4812100229	Set screw	2	
18	4812100234	Planetary gear	8	
19	4812100235	Washer	28	
20	-	Nut	4	
21	4812100237	Screw	24	
22	4812100238	Kit bearing	4	
23	-	Snap Ring	8	
23	4812100239	Kit planetary pinion bearing	8	
.23	-	Roller	656	
.23	-	Snap Ring	8	
.23	4812317035	Spacer	8	
.23	4812317292	Roller	656	
.23	-	Washer	8	
.23	-	Snap Ring	8	
.23	-	Snap Ring	8	

Item	Part No.	Name	Qty	L
.23	-	Washer	8	
.23	-	Snap Ring	8	

Hydraulic system 4812100683 Transmission Hydraulic System

This page intentionally left blank

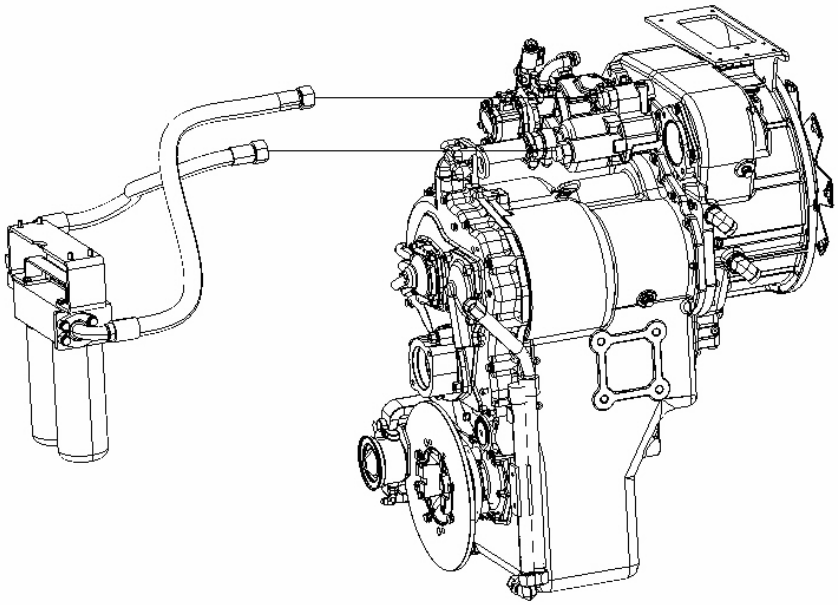

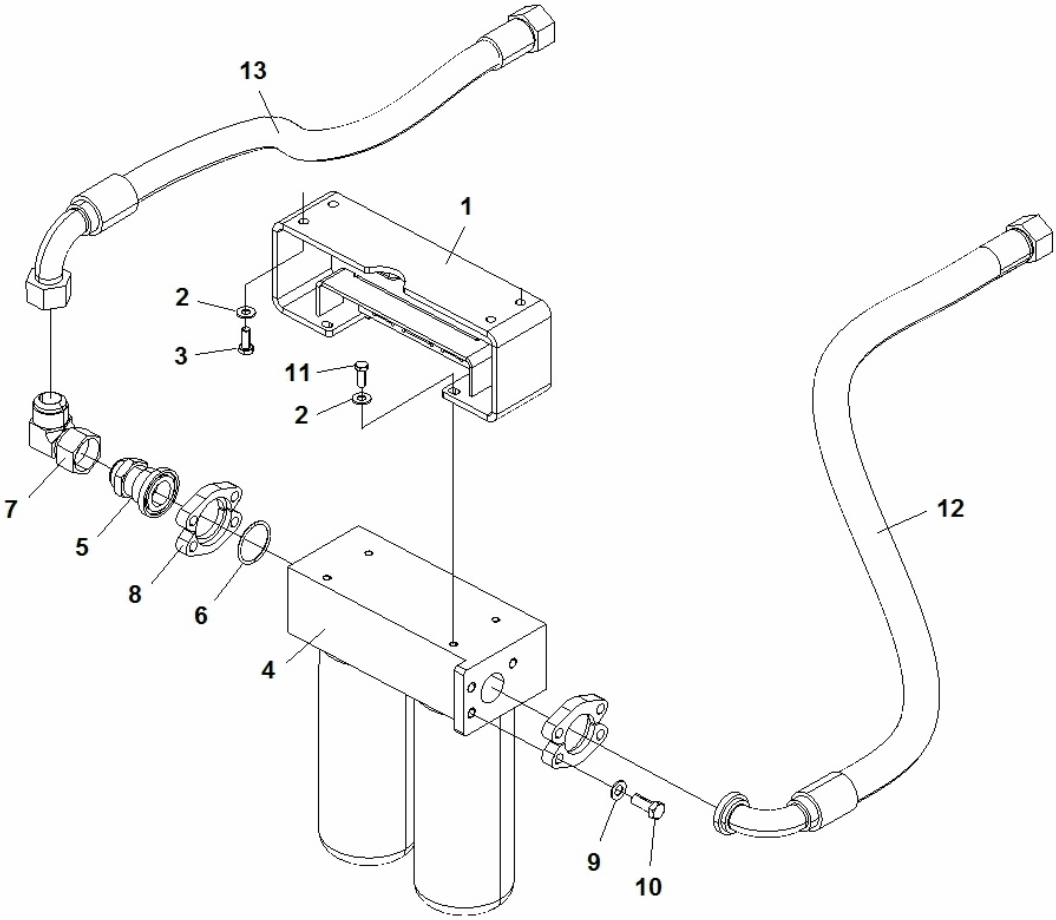
13
1
2
3
11
2
7
5
8
6
4
12
9
10

Item	Part No.	Name	Qty	L
1	4812100846	Bracket	1	
2	4700904230	Washer	8	
3	4700500280	Screw M10x1,5x25	4	
4	4700198785	Filter assy	1	
.4	4700199591	Transmission oil filter	2	
5	4700199544	Adapter	1	
6	4700160191	O-ring	1	
7	4700234152	Connection	1	
8	4700232118	Flange	4	
9	4700904231	Steel plain washer, 13x24x2 mm 300 HV	8	
10	4700502058	Screw	8	
11	4700502035	Screw 3/8"-16UNCx1 8.8	4	
12	4700198951	Hydraulic hose	1	
13	4700198950	Hydraulic hose	1	

CT30001004 Brakes CT30001004 Brakes

NO DRAWING AVAILABLE FOR THIS BOM

Item	Part No.	Name	Qty	L
1	CT300010041	Output shaft brake	1	
2	4700170398	Brake head assembly	1	
3	CT300010042	Wet disc brake	1	

CT30001004 Brakes CT300010042 Wet disc brake

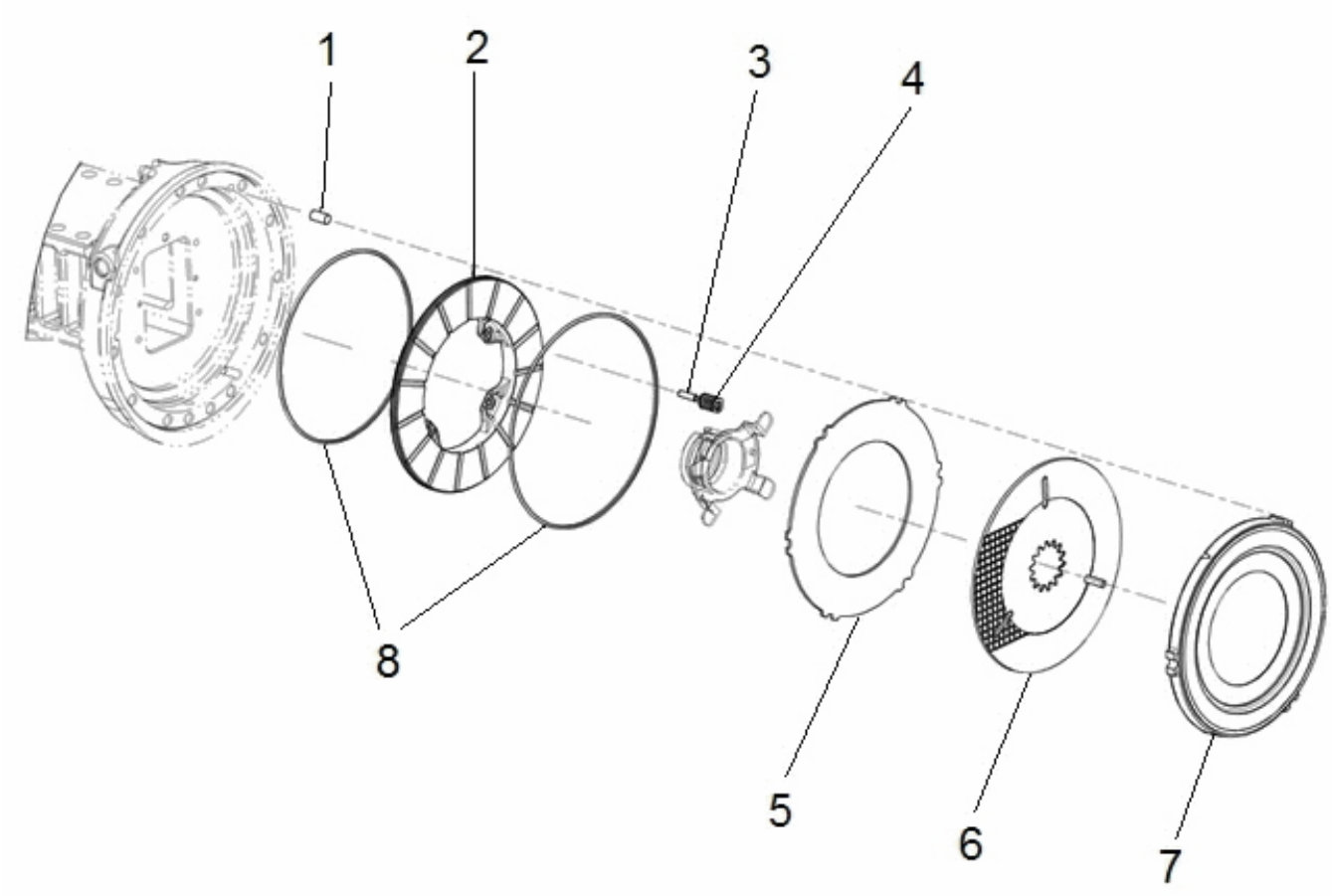

Item	Part No.	Name	Qty	L
1	4812100240	Dowel	6	
2	4812100241	Piston	2	
3	4812100242	Dowel	8	
4	4812100243	Spring return	8	
5	4812100244	Brake disc	2	
6	4812100245	Friction disc	2	
7	4812100246	Plate backing	2	
8	4812100247	Seal kit	2	

CT30001004 Brakes 4700170398 Brake head assembly

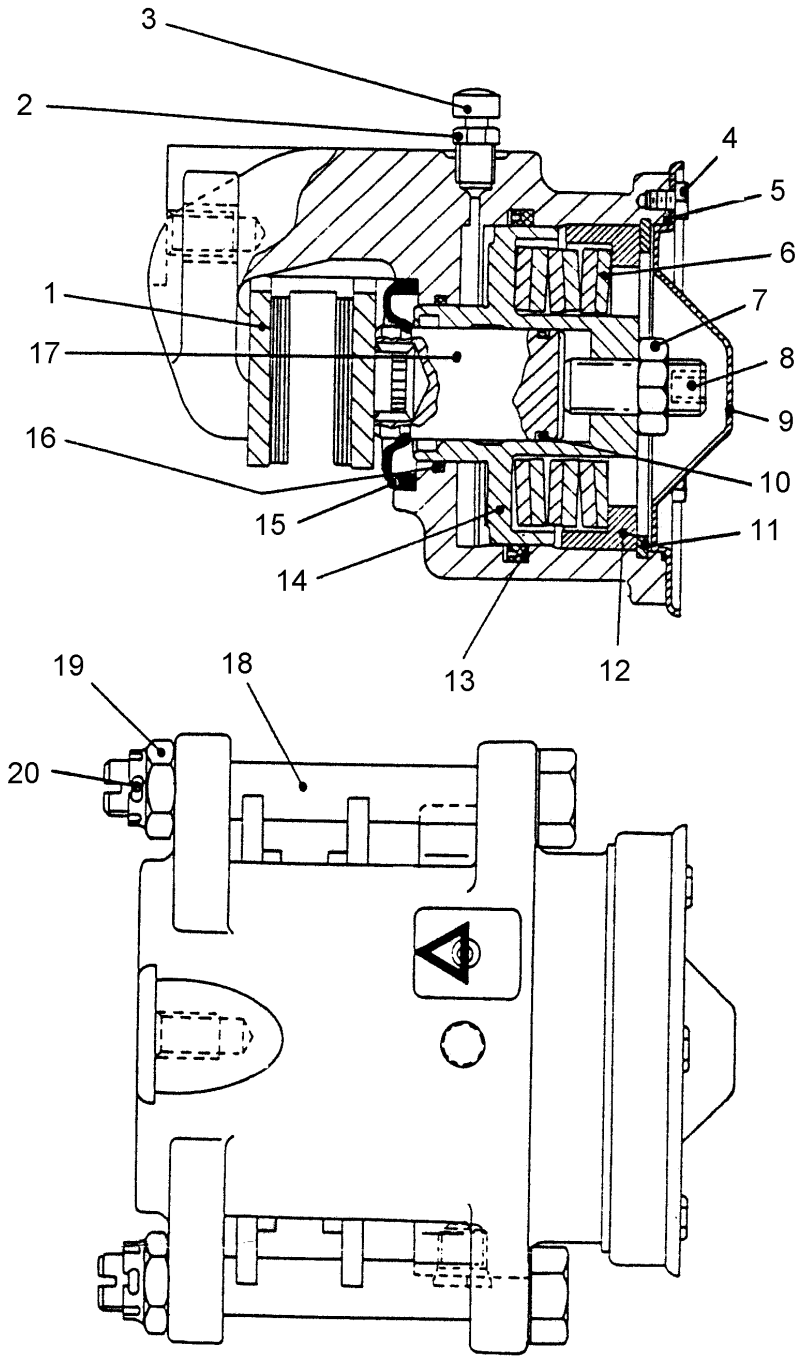

Item	Part No.	Name	Qty	L
1	4700170404	Plate lining	2	
2		Bleeder	1	
3		Protective cap	1	
4	4700170407	Cover capscrew	4	
5		Retaining ring	1	
6	4700170409	Disc spring pack assy	1	
7	4700170410	Hex jam nut	1	
8		Threaded rod	1	
9		Cover	1	
10	4700170413	Push rod seal	1	
11		Cover seal	1	
12		Spacer	1	
13	4700170416	Seal retainer	1	
14		Piston	1	
15		Seal retainer (U section)	1	
16		Seal ring	1	
17		Push rod	1	
18		Screw	2	
19		Hex nut	2	
20		Cotter pin	2	
21	4700170424	Seal kit	1	A

Comments for Page: 4700170398 Brake head assembly

(L)OCAL REMARKS

A | en_US | Included items - 10,11,13,15 &16 & 16

CT300010041 Output shaft brake CT300010041 Output shaft brake

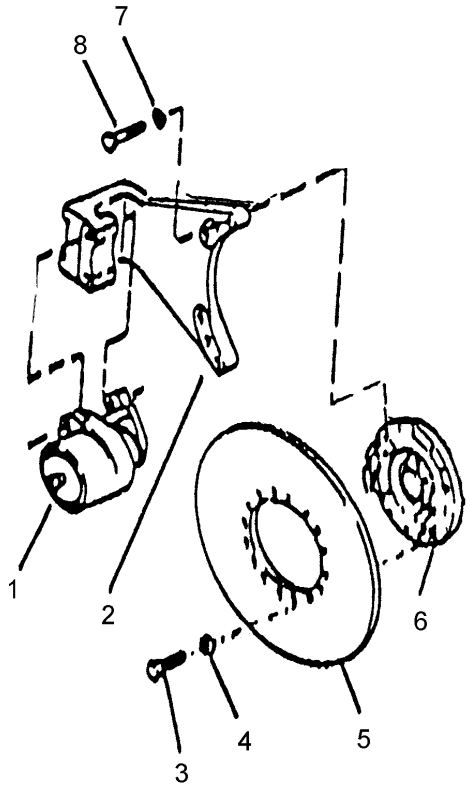

Item	Part No.	Name	Qty	L
1	4700170398	Brake head assembly	1	
2		Brake bracket	1	
3		Screw	1	
4		Spring washer	1	
5	4700170401	Brake disc	1	
6	-	Brake flange	1	
7		Spring washer	4	
8	4700170403	Screw	4	

Referenced Pages

4700170398 Brake head assembly 351

4812100682 Brake module 4812100682 Brake module

This page intentionally left blank

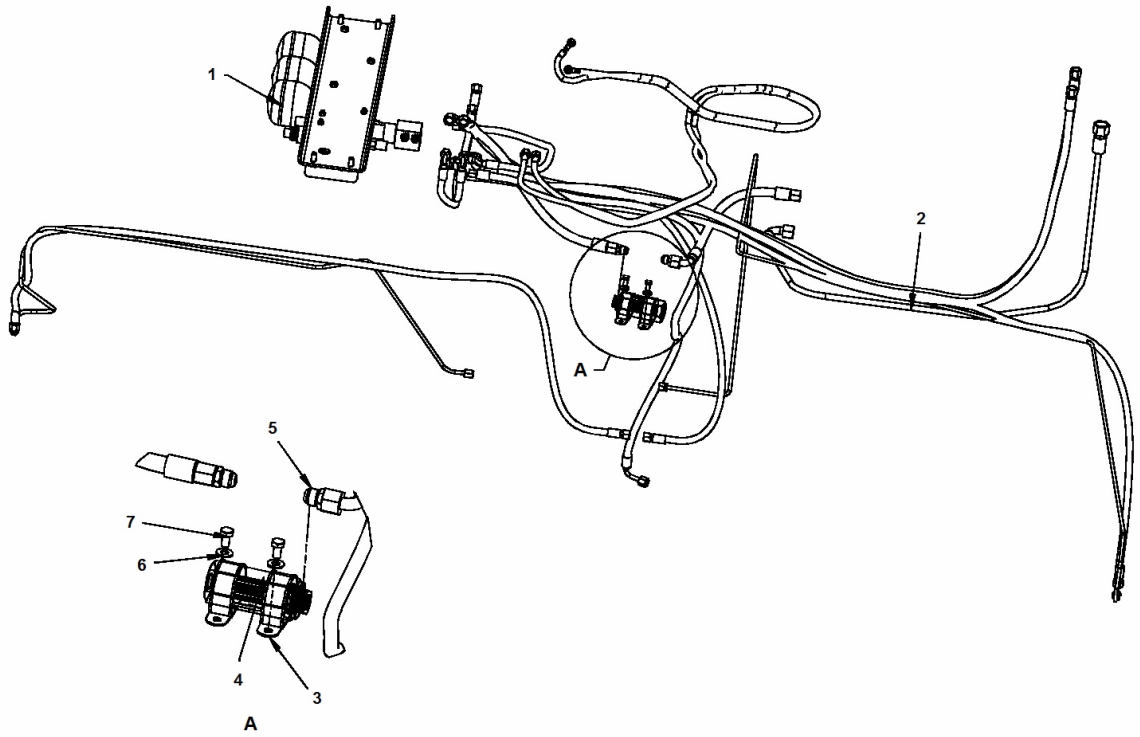
1
2
A
5
7
6
4
3
A

Item	Part No.	Name	Qty	L
1	4812101050	Valve and Accumulators Assy	1	
2	4812101053	Brake System Hose Kit	1	
2	-	Brake System Hose Kit	1	
2	-	Brake System Hose Kit	1	
2	-	Brake System Hose Kit	1	
2	-	Brake System Hose Kit	1	
3	4700904352	Clamp	2	
4	4700396274	Hydraulic oil filter	1	
5	4700334137	Adapter	2	
6	4700904230	Washer	2	
7	4700900486	Screw	2	

4812100682 Brake module Brake System Hose Kit

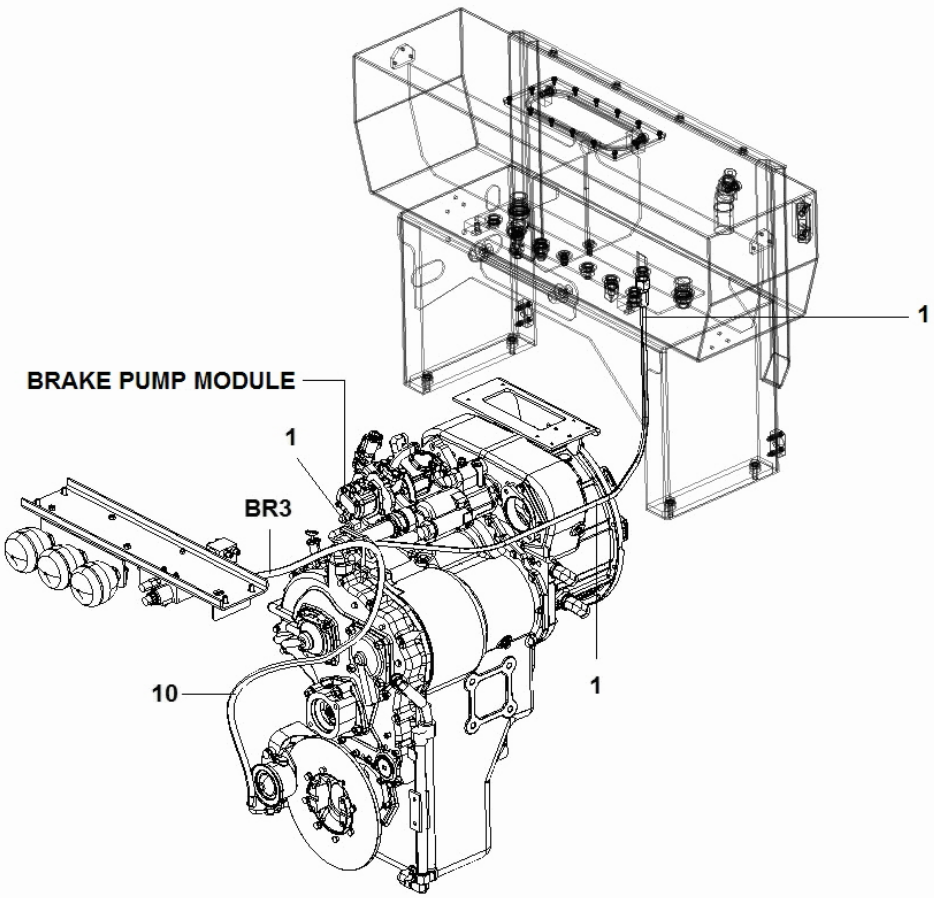

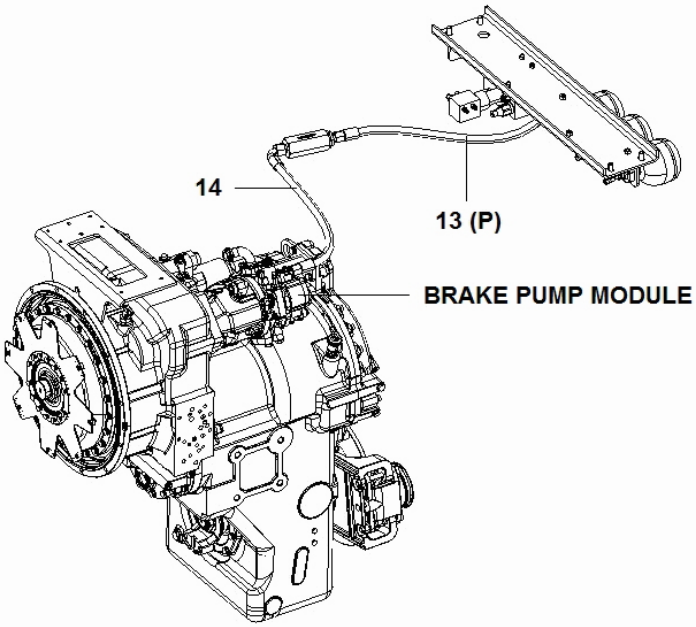

Item	Part No.	Name	Qty	L
1	4812101136	Hydraulic hose	1	
10	4700198947	Hydraulic hose	1	
13	4812100596	Hydraulic hose	1	
14	4700482323	Hydraulic hose	1	

4812100682 Brake module Brake System Hose Kit

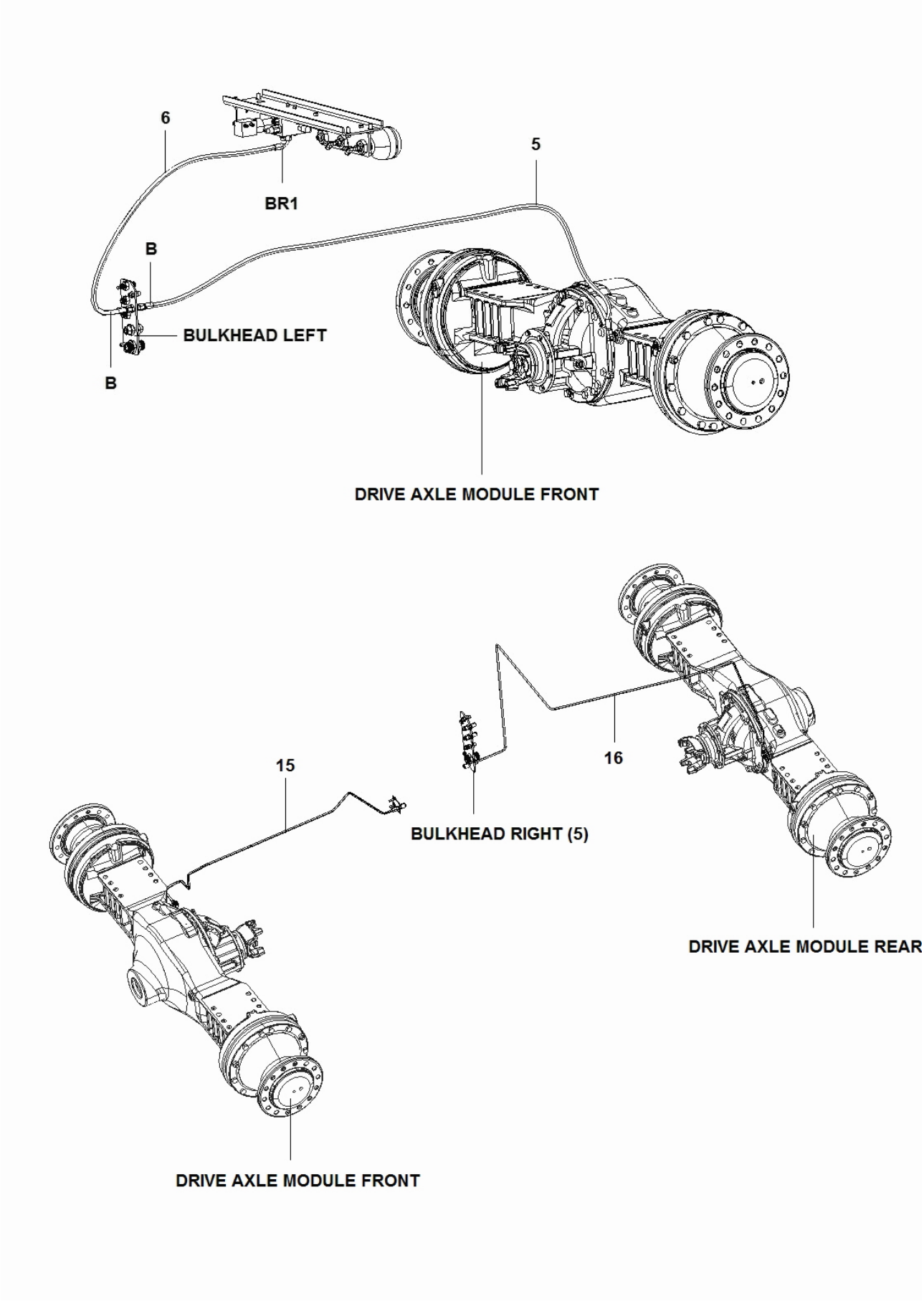

Item	Part No.	Name	Qty	L
5	4700484046	Hydraulic hose	1	
6	4812100591	Hydraulic hose	1	
15	4812101790	Measuring hose	1	
16	4812101791	Measuring hose	1	

4812100682 Brake module Brake System Hose Kit

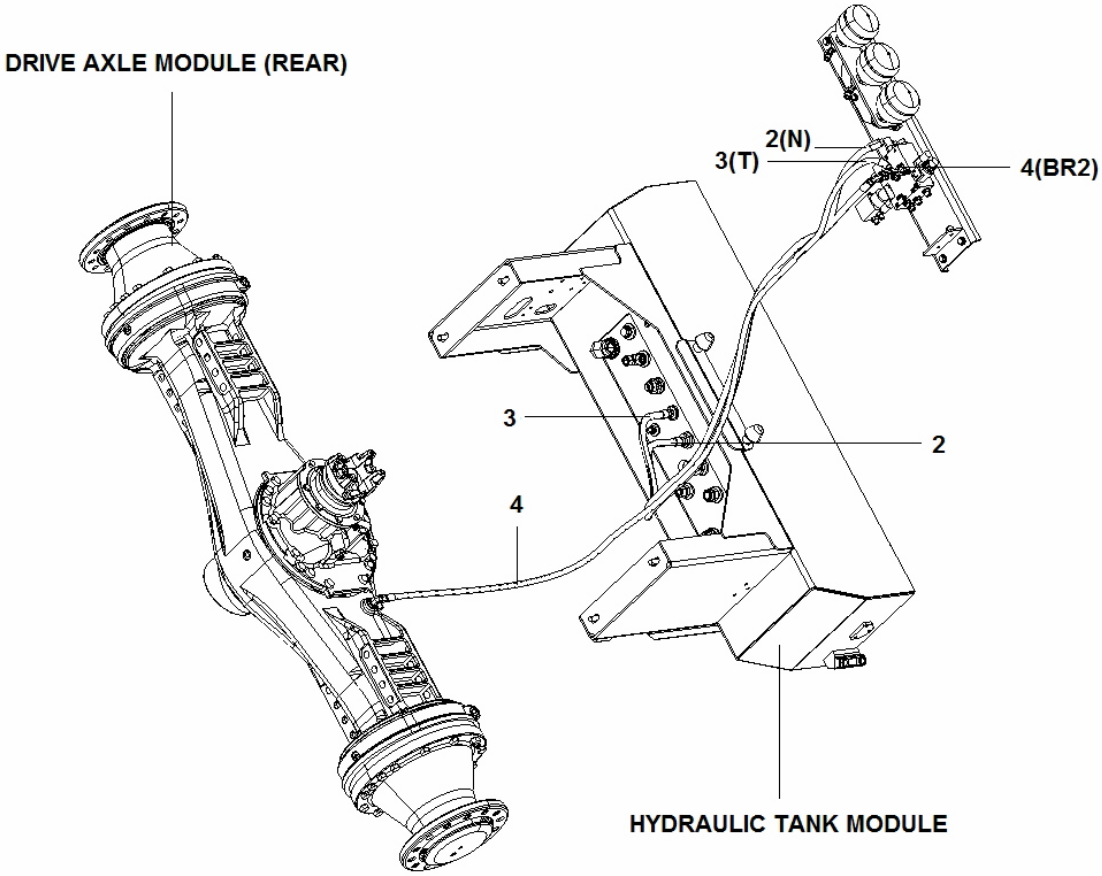

Item	Part No.	Name	Qty	L
2	4812100594	Hydraulic hose	1	
3	4812100594	Hydraulic hose	1	
4	4812100592	Hydraulic hose	1	

4812100682 Brake module Brake System Hose Kit

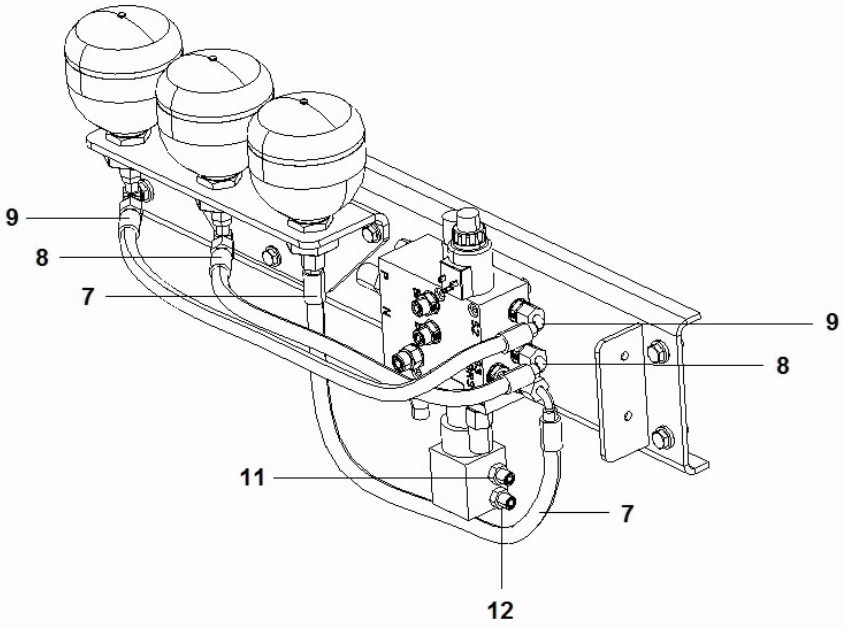

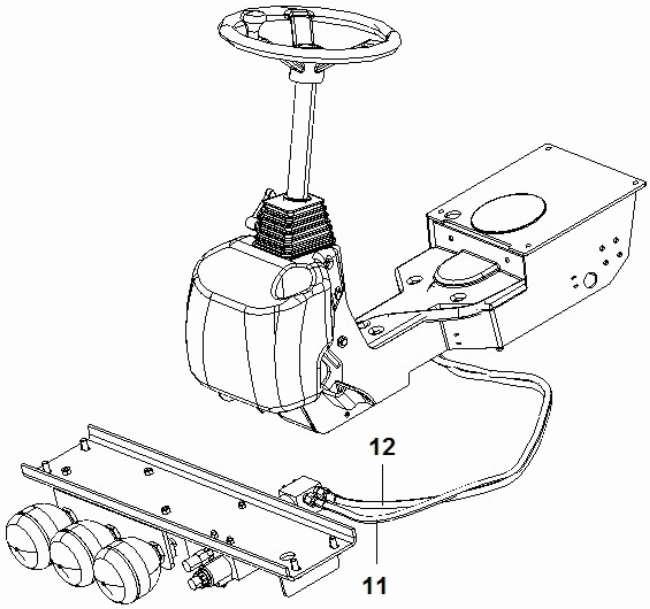

Item	Part No.	Name	Qty	L
7	4700483744	Hydraulic hose	1	
8	4812100588	Hydraulic hose	1	
9	4812100588	Hydraulic hose	1	
11	4812100583	Hydraulic hose	1	
12	4812100584	Hydraulic hose	1	

4812100682 Brake module 4812101053 Brake System Hose Kit

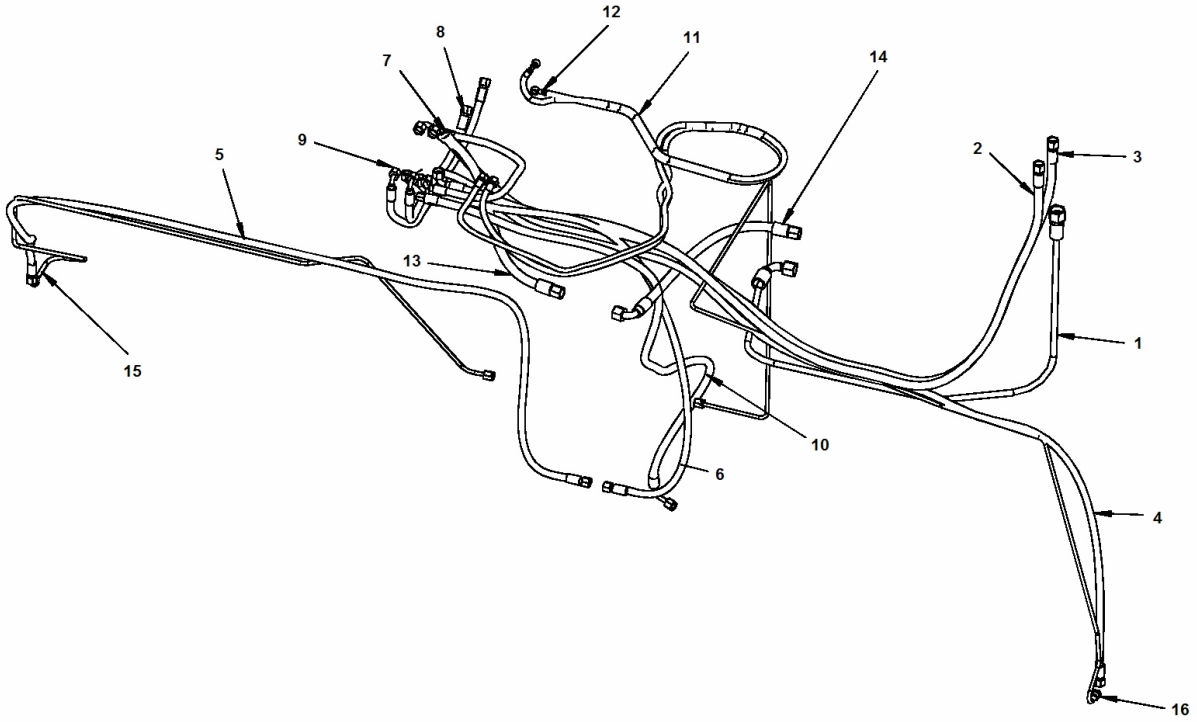

Item	Part No.	Name	Qty	L
1	4812101136	Hydraulic hose	1	
2	4812100594	Hydraulic hose	1	
3	4812100594	Hydraulic hose	1	
4	4812100592	Hydraulic hose	1	
5	4700484046	Hydraulic hose	1	
6	4812100591	Hydraulic hose	1	
7	4700483744	Hydraulic hose	1	
8	4812100588	Hydraulic hose	1	
9	4812100588	Hydraulic hose	1	
10	4700198947	Hydraulic hose	1	
11	4812100583	Hydraulic hose	1	
12	4812100584	Hydraulic hose	1	
13	4812100596	Hydraulic hose	1	
14	4700482323	Hydraulic hose	1	
15	4812101790	Measuring hose	1	
16	4812101791	Measuring hose	1	

4812101050 Valve and Accumulators Assy 4812101050 Valve and Accumulators Assy

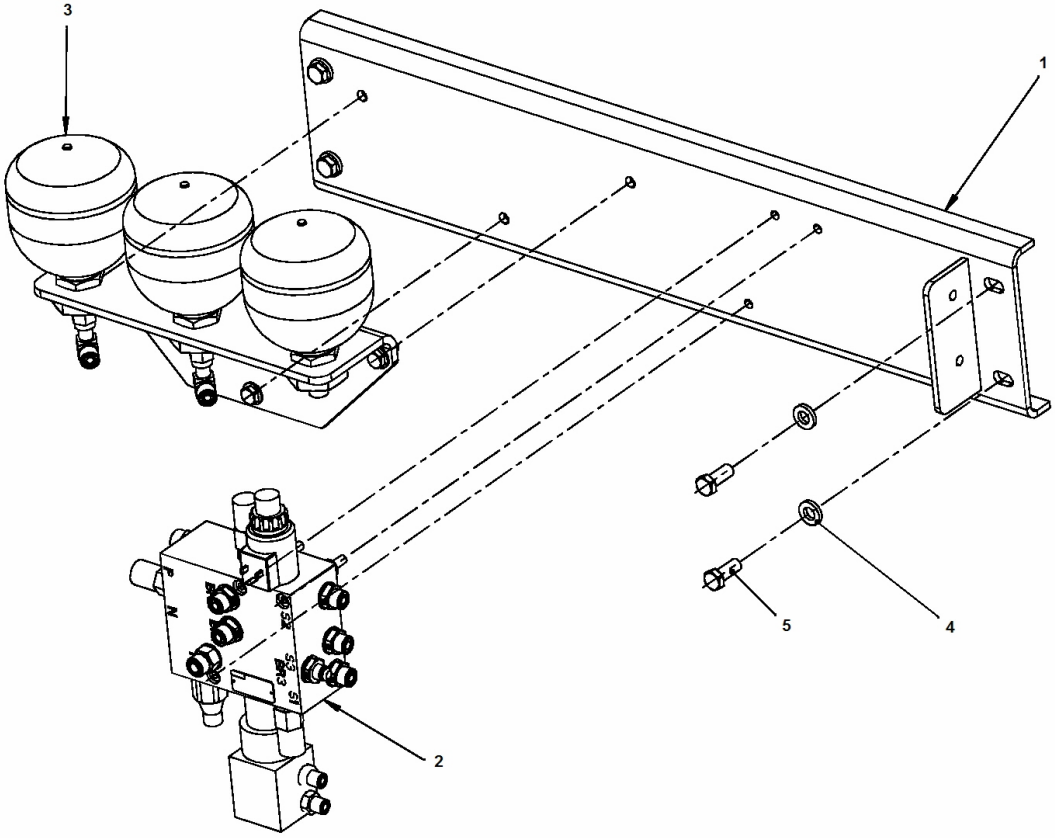

Item	Part No.	Name	Qty	L
1	4812100581	Bracket	1	
2	4812101048	Brake Valve Module	1	
3	4812101051	Accumulator Assy	1	
4	4700904703	Plain washer 13x24x4 mm	4	
5	4700500046	Hex. head screw M12x030H	4	

4812101050 Valve and Accumulators Assy 4812101051 Accumulator Assy

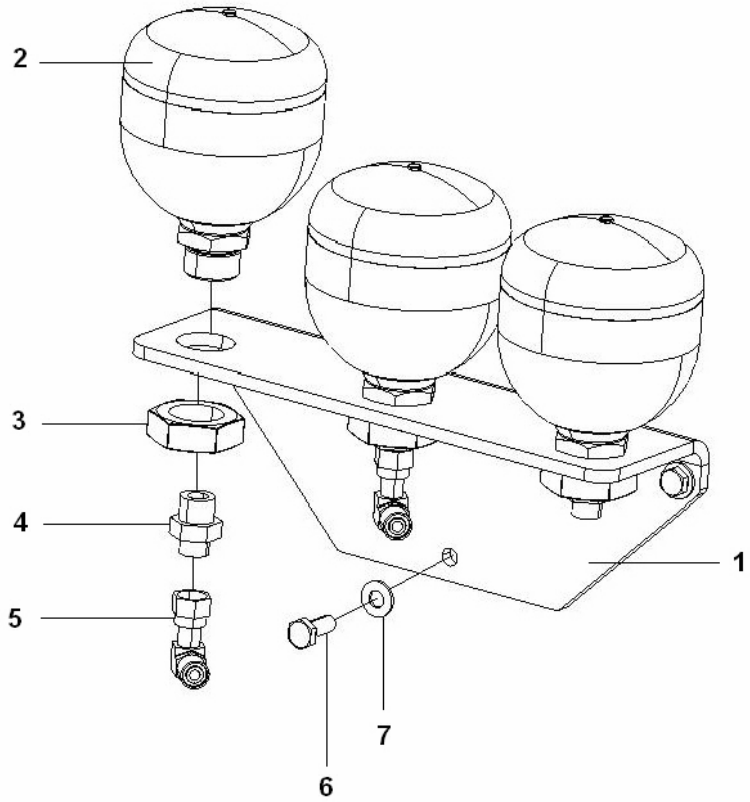

Item	Part No.	Name	Qty	L
1	4812100580	Support	1	
2	4700396171	Accumulator	3	
3	4700396349	Nut	3	
4	4700791405	Straight o-ring connector	3	
5	4700791401	Elbow 90, O-ring with swivel	2	
6	4700500028	Screw, M10x25 mm 8.8 A3K	3	
7	4700904230	Washer	3	

4812101050 Valve and Accumulators Assy 4812101048 Brake Valve Module

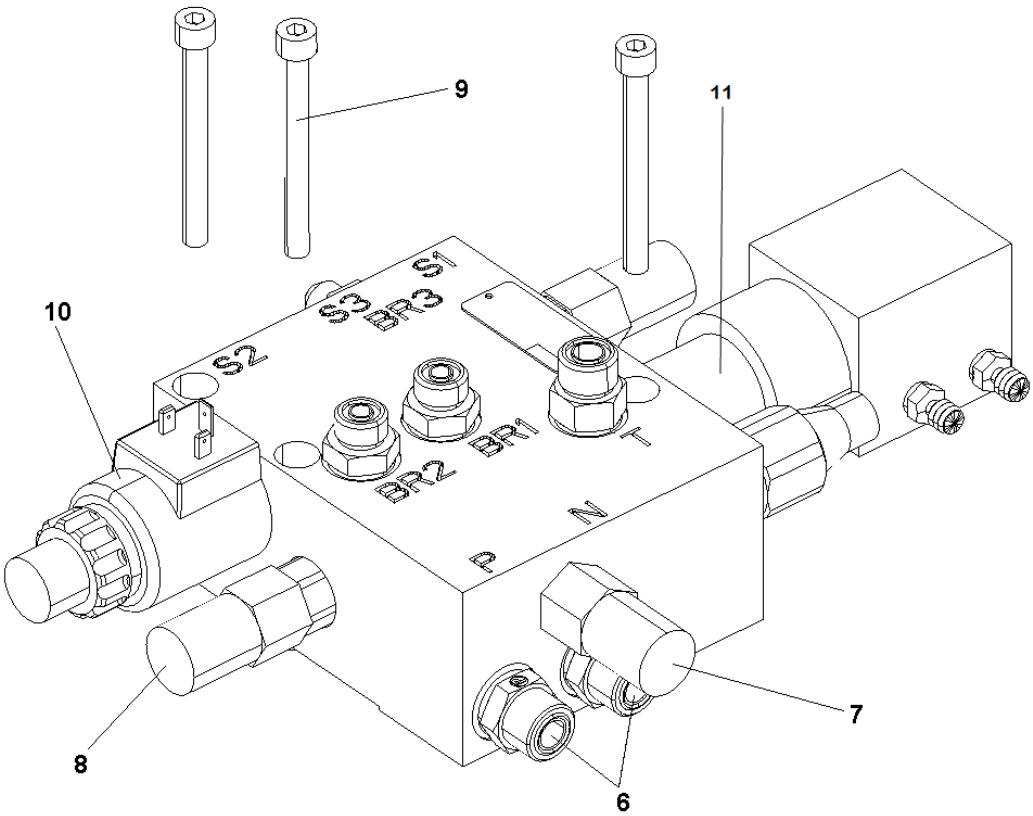

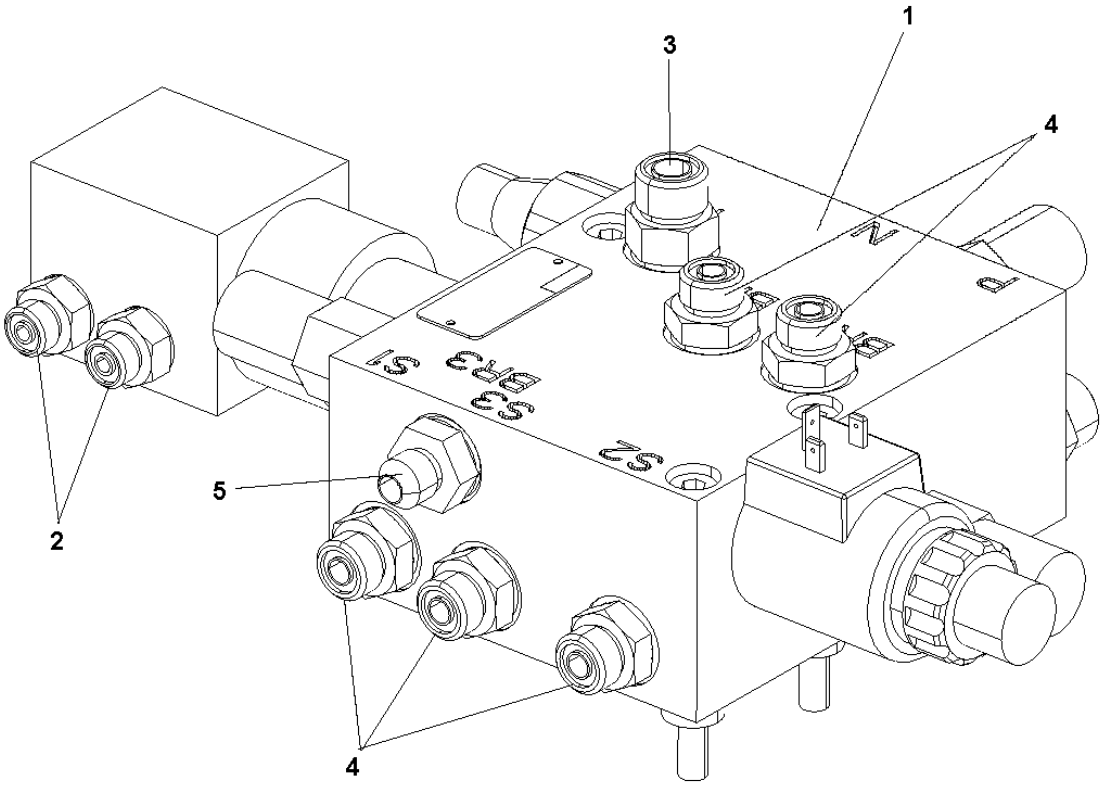

Item	Part No.	Name	Qty	L
1	4812100411	Hydraulic control	1	
2	4700791538	Straight connector	2	
3	4700792563	Decal compacting rocks	1	
4	4700791535	Connector	5	
5	4700902131	Straight connector	1	
6	4700792151	Elbow adapter 90	2	
7	4812100008	Pressure switch	1	
8	4812101876	Pressure switch for brake light	1	
9	4700508078	Screw	3	
10	4812101874	Solenoid 24V	1	
11	4812317032	Spring	1	

4812100925 Transmission assembly 4812100925 Transmission assembly

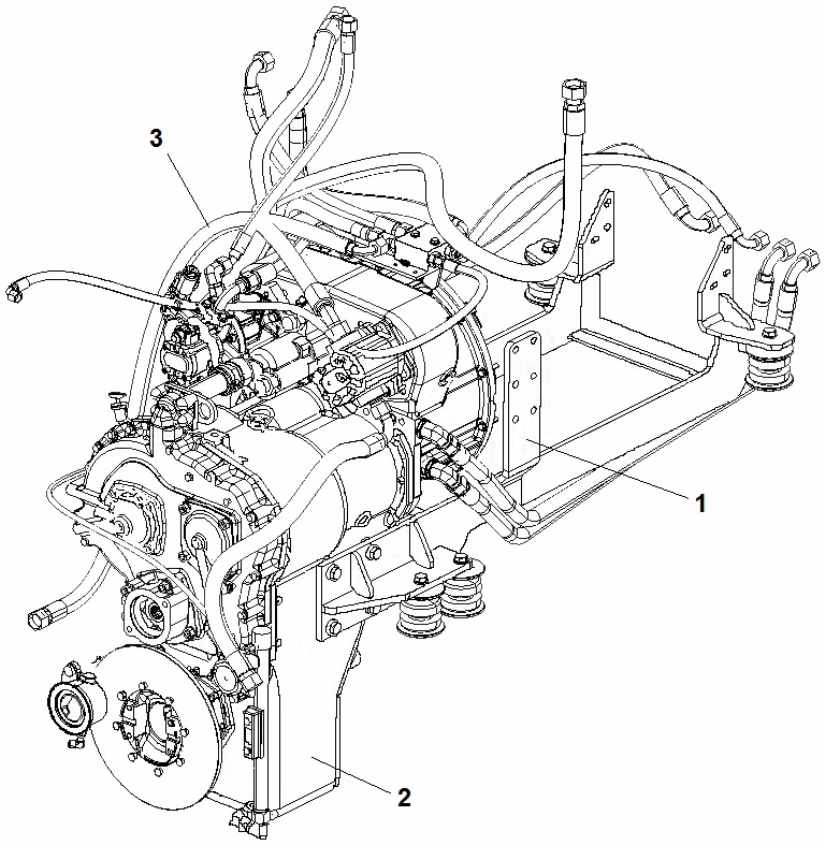

Item	Part No.	Name	Qty	L
1	4812100928	Cradle Module	1	
2	4812100931	Transmission Module	1	
3	4812100943	Transmission Hose Kit	1	
3	-	Transmission Hose Kit	1	
3	-	Transmission Hose Kit	1	
3	-	Transmission Hose Kit	1	

4812100925 Transmission assembly Transmission Hose Kit

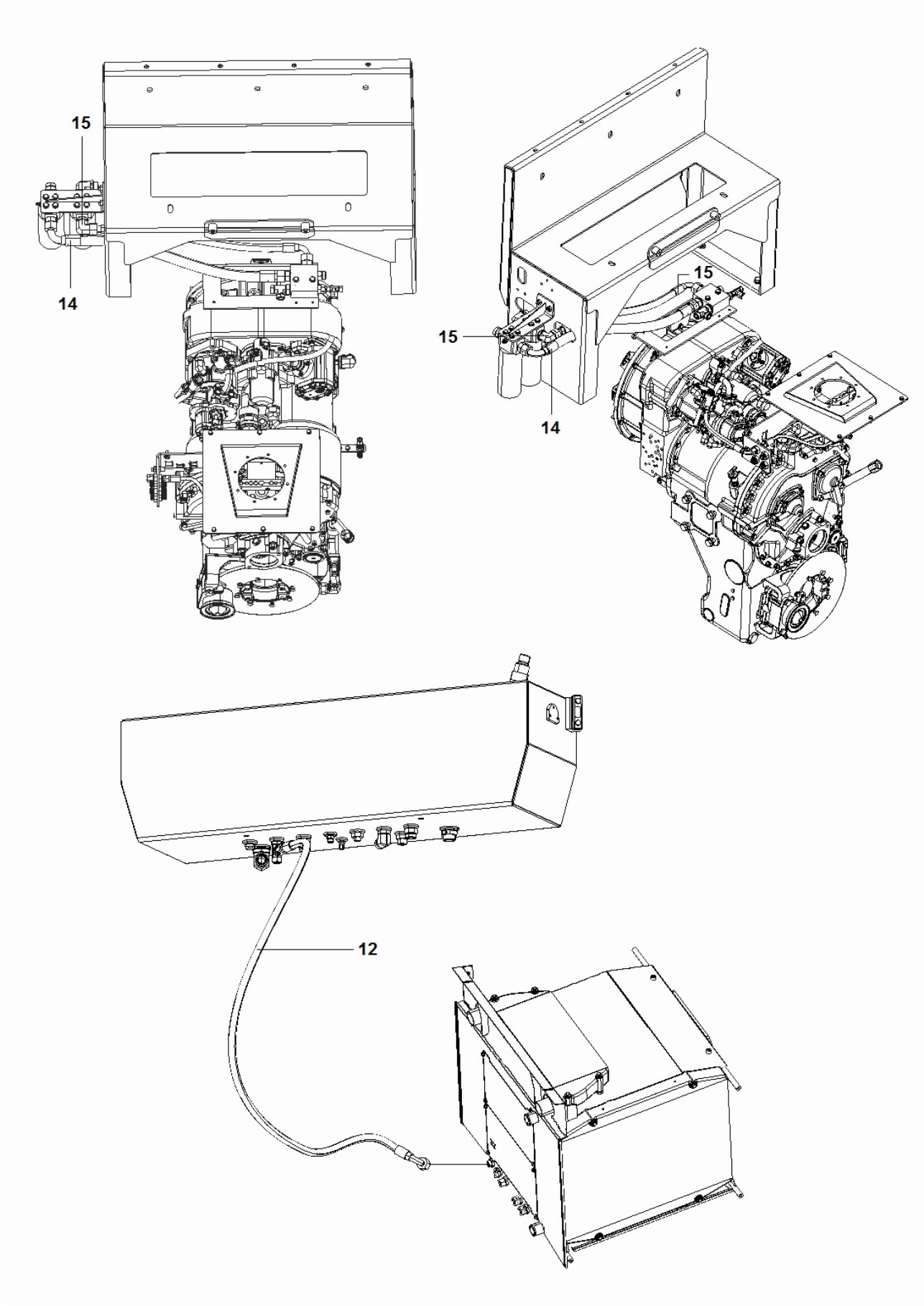

Item	Part No.	Name	Qty	L
12	4700484334	Hydraulic hose	1	
14	4812101795	Hydraulic hose	1	
15	4812101796	Hydraulic hose	1	

4812100925 Transmission assembly Transmission Hose Kit

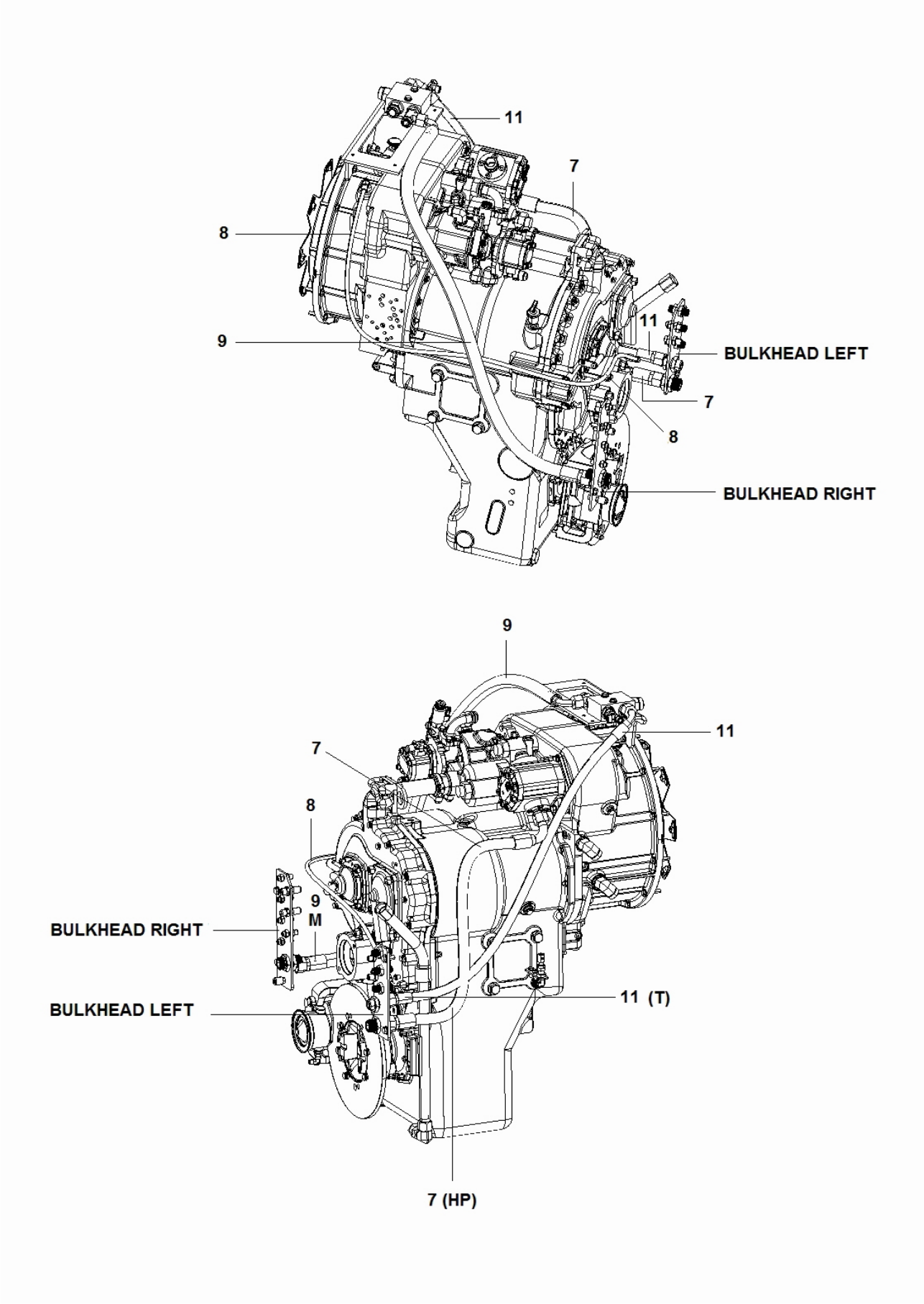

Item	Part No.	Name	Qty	L
7	4812100606	Hydraulic hose	1	
8	4700199522	Hydraulic hose	1	
9	4812101190	Hydraulic hose	1	
11	4700483732	Hydraulic hose	1	

4812100925 Transmission assembly Transmission Hose Kit

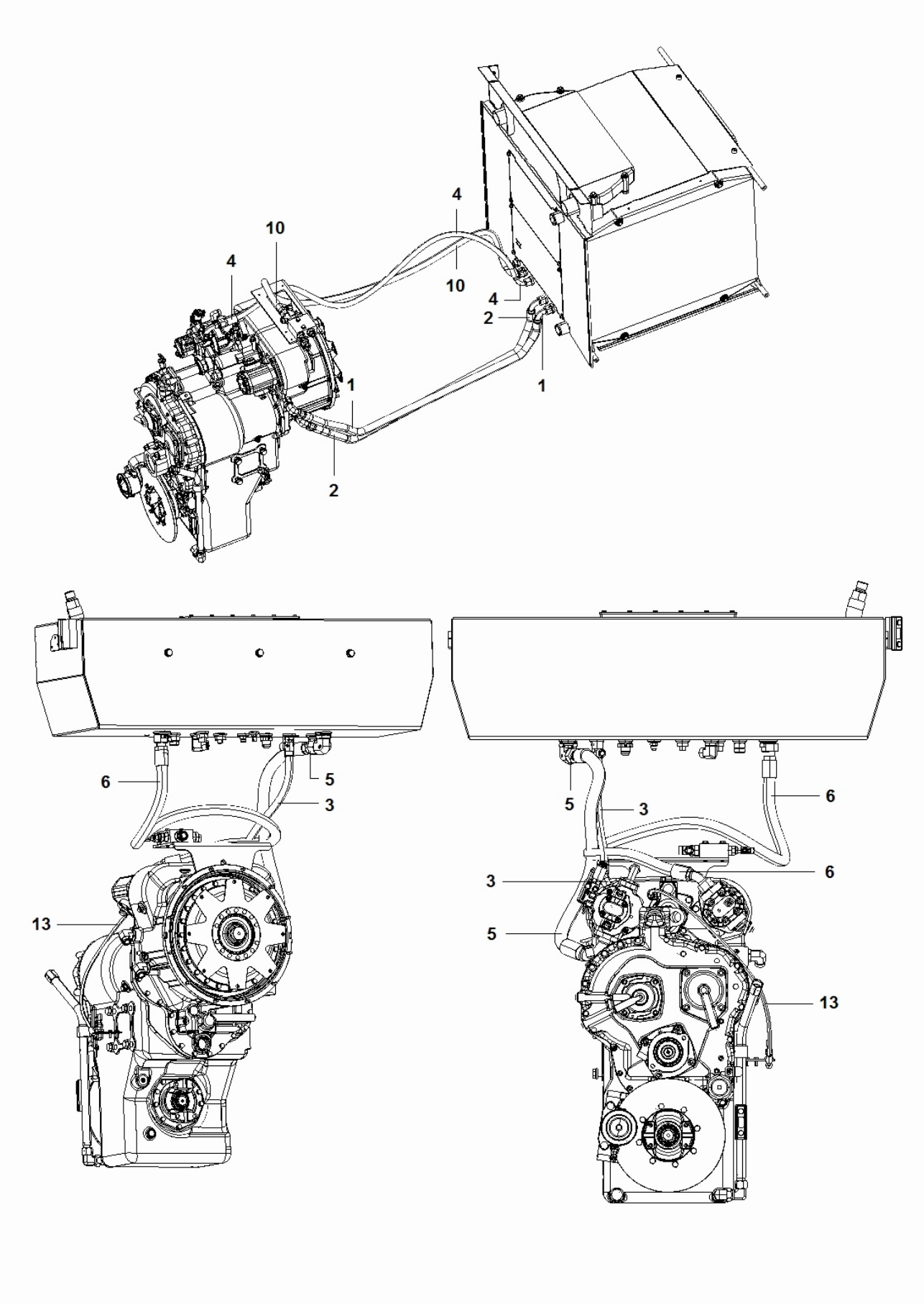

Item	Part No.	Name	Qty	L
1	4812101188	Hydraulic hose	1	
2	4812101189	Hydraulic hose	1	
3	4812101164	Hydraulic hose	1	
4	4812101155	Hydraulic hose	1	
5	4812101163	Hydraulic hose	1	
6	4812100605	Hydraulic hose	1	
10	4812101186	Hydraulic hose	1	
13	4700484344	Hydraulic hose	1	

4812100925 Transmission assembly 4812100943 Transmission Hose Kit

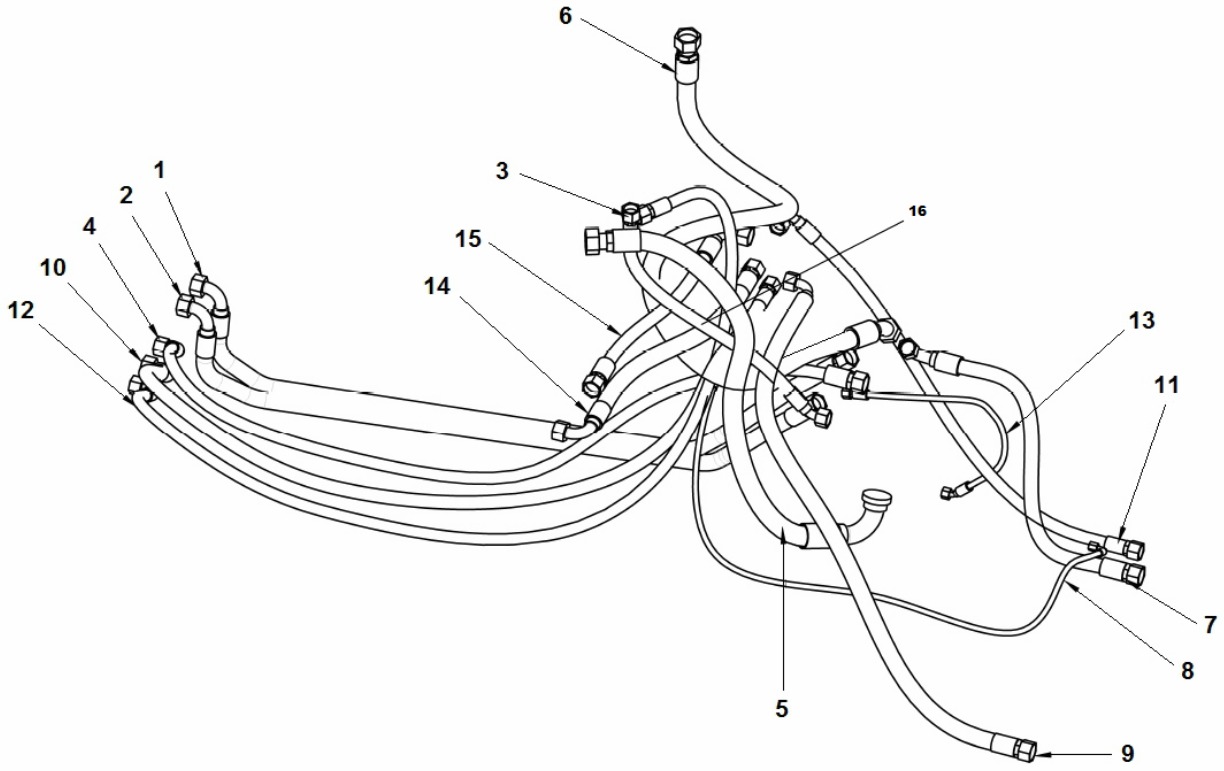

Item	Part No.	Name	Qty	L
1	4812101188	Hydraulic hose	1	
2	4812101189	Hydraulic hose	1	
3	4812101164	Hydraulic hose	1	
4	4812101155	Hydraulic hose	1	
5	4812101163	Hydraulic hose	1	
6	4812100605	Hydraulic hose	1	
7	4812100606	Hydraulic hose	1	
8	4700199522	Hydraulic hose	1	
9	4812101190	Hydraulic hose	1	
10	4812101186	Hydraulic hose	1	
11	4700483732	Hydraulic hose	1	
12	4700484334	Hydraulic hose	1	
13	4700484344	Hydraulic hose	1	
14	4700484163	Hydraulic hose	1	
15	4700484163	Hydraulic hose	1	
16	4700170582	Protector hose	1	

4812100925 Transmission assembly 4812100928 Cradle Module

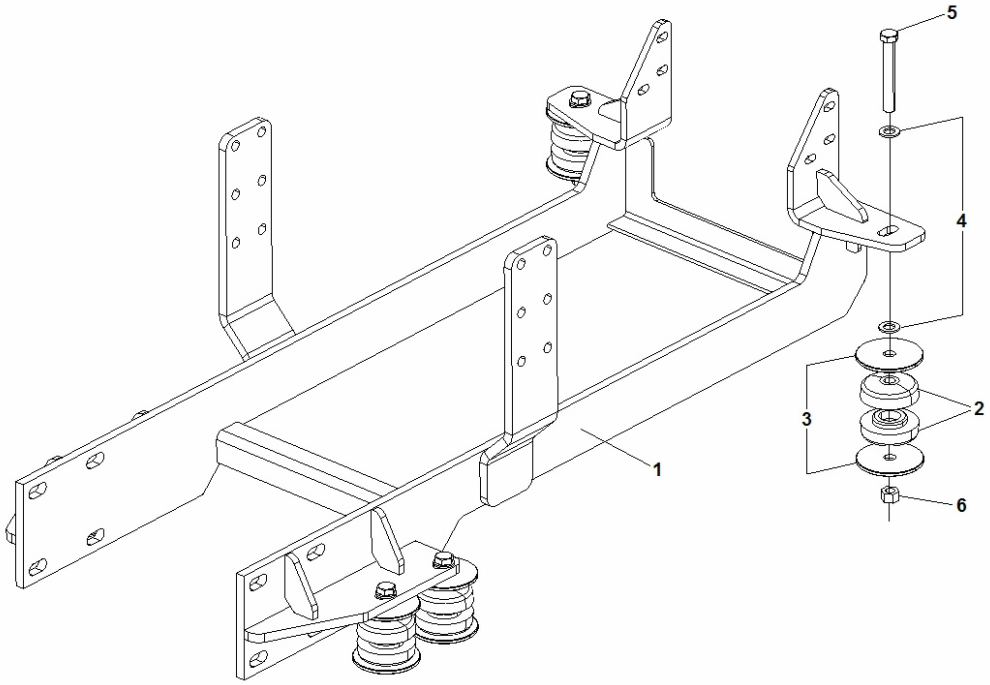

Item	Part No.	Name	Qty	L
1	4812100640	Engine Cradle	1	
2	4700263355	Cushion	12	
3	4812316094	Washer	12	
4	4700904793	Steel plain washer	12	
5	4700923569	Screw	6	
6	4700586116	Nut	6	

4812100931 Transmission Module 4812100931 Transmission Module

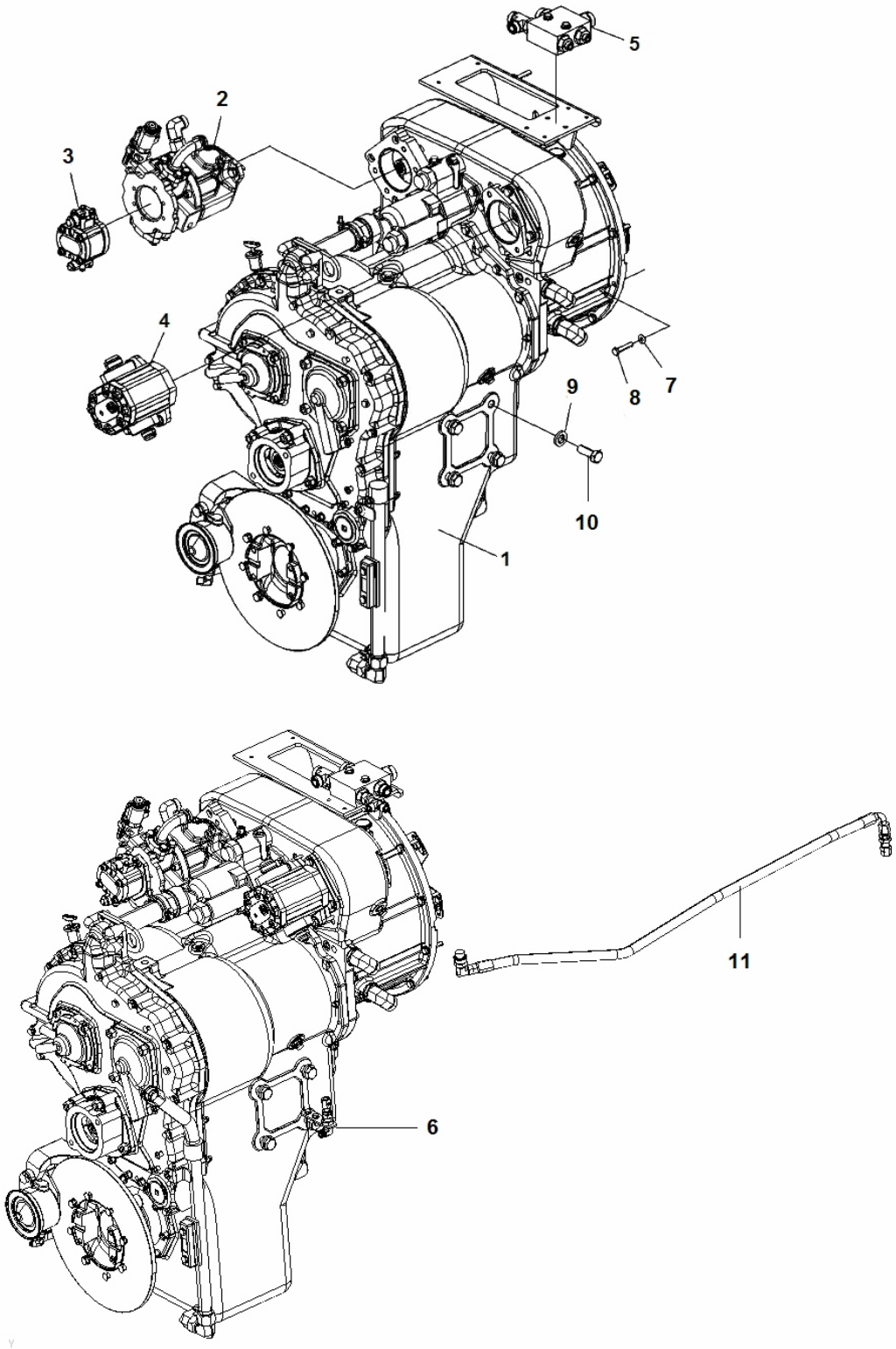

Item	Part No.	Name	Qty	L
1	4812100932	Transmission	1	
2	4812100936	Fan Drive Pump Module	1	
3	4812100933	Brake Pump Module	1	
4	4812100938	Steering Pump Module	1	
5	4812100941	Manifold 2 Assembly	1	
6	4812101757	Module fixation of connections	1	
7	4700904230	Washer	12	
8	4700900329	Screw	12	
9	4700903290	Steel plain washer 21x36x6	8	
10	4700928526	Screw	8	
11	4812101793	Drain hose kit	1	

4812100931 Transmission Module 4812101793 Drain hose kit

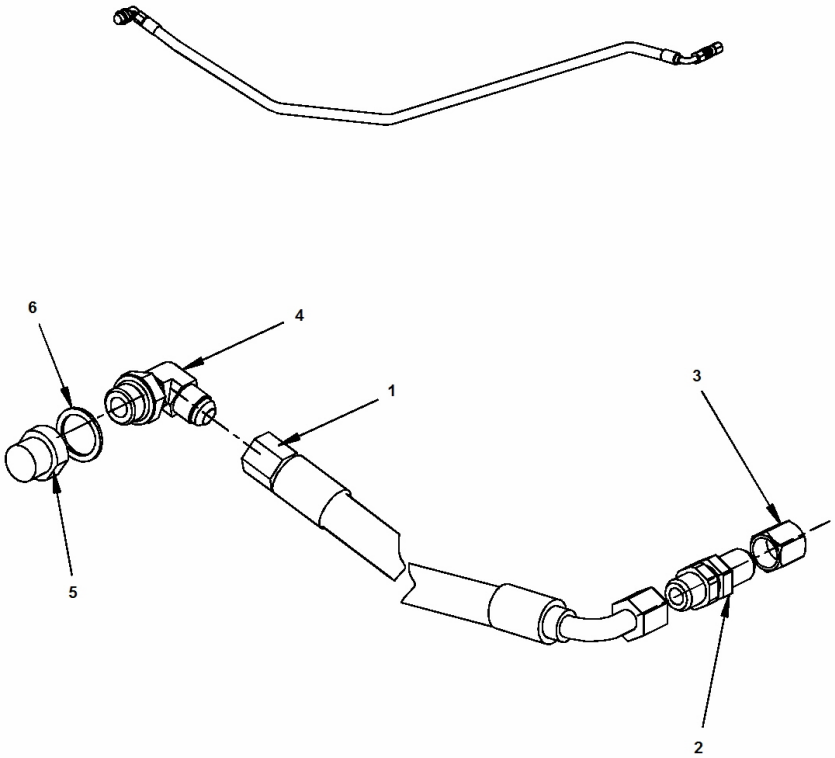

Item	Part No.	Name	Qty	L
1	4812101792	Hose	1	
2	4700230515	Connector	1	
3	4700330383	Cap JIC, steel	1	
4	4700791431	Elbow 90, O-ring	1	
5	4700379480	Reducer	1	
6	4811000151	Washer sealing	1	

4812100931 Transmission Module 4812101757 Module fixation of connections

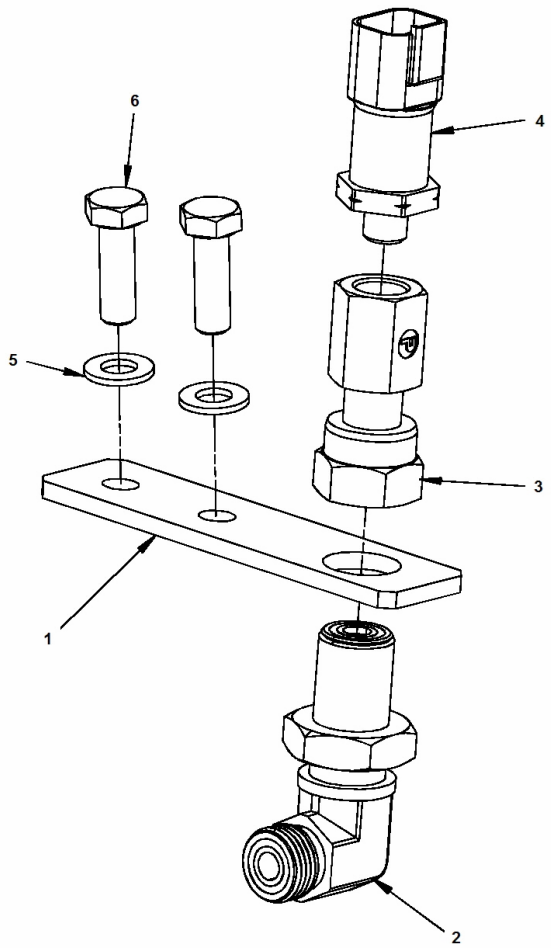

Item	Part No.	Name	Qty	L
1	4812101755	Bracket	1	
2	4700792744	Bulkhead union elbow 90	1	
3	4700791847	Straight connector	1	
4	4812101762	Pressure sensor	1	
5	4700904229	Washer, 8.4x16x1.5 mm 300 HV	2	
6	4700500021	Hex. screw	2	

4812100931 Transmission Module 4812100941 Manifold 2 Assembly

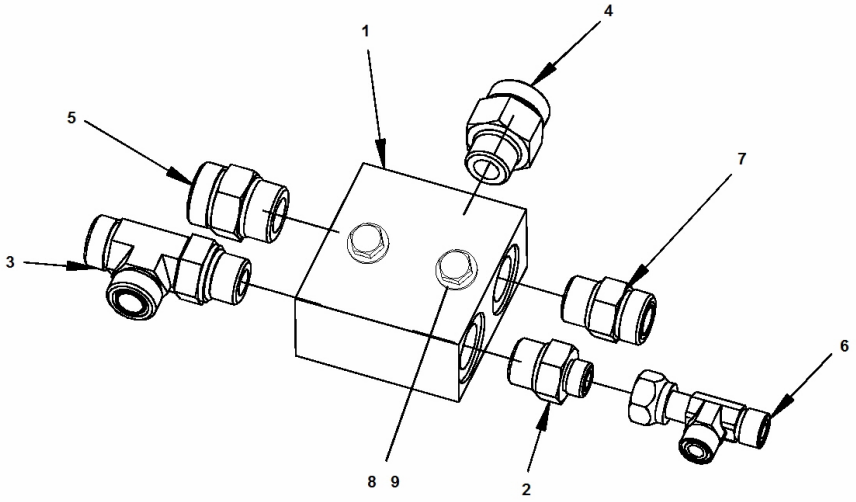

Item	Part No.	Name	Qty	L
1	4700345243	Connection block	1	
2	4700791850	Adapter	2	
3	4700792165	Tee connector	1	
4	4812100737	Straight connector	1	
5	4700792339	Adapter	1	
6	4700791798	Adapter	1	
7	4700791823	Adapter	1	
8	4700500109	Screw, M10x65 mm 8.8 A3K	2	
9	4700904230	Washer	2	

4812100931 Transmission Module 4812100938 Steering Pump Module

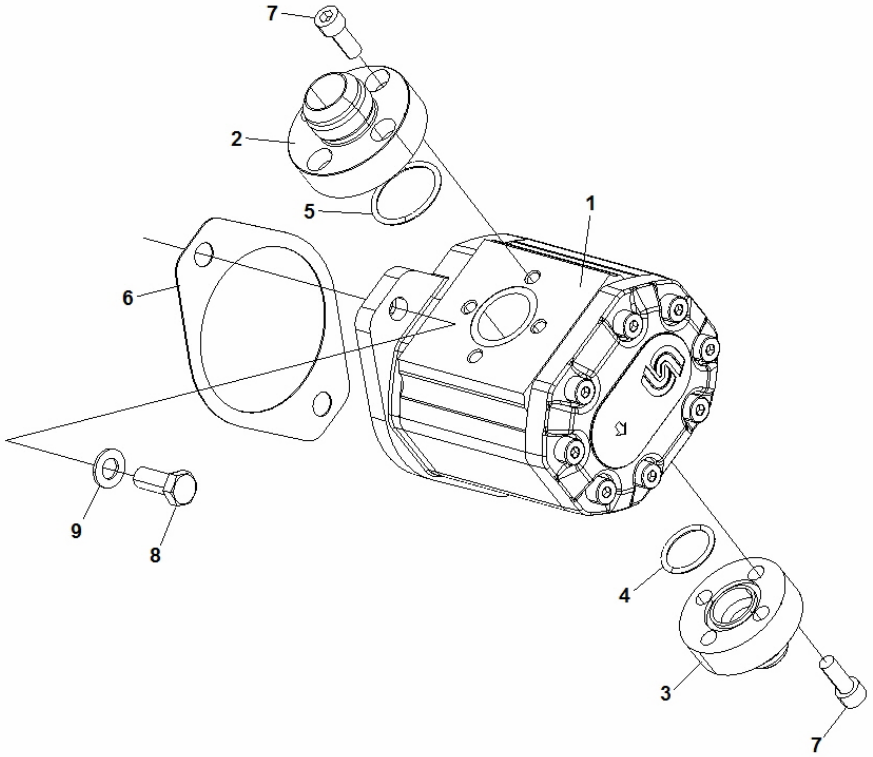

Item	Part No.	Name	Qty	L
1	4700198681	Steering pump	1	
2	4700199917	Flanged connection	1	
3	4700199918	Flanged connection	1	
4	4700160220	O-ring	1	
5	4700160166	O-ring	1	
6	4700243198	Gasket	1	
7	4700508013	Screw	8	
8	4700904231	Steel plain washer, 13x24x2 mm 300 HV	2	
9	4700502058	Screw	2	

4812100931 Transmission Module 4812100933 Brake Pump Module

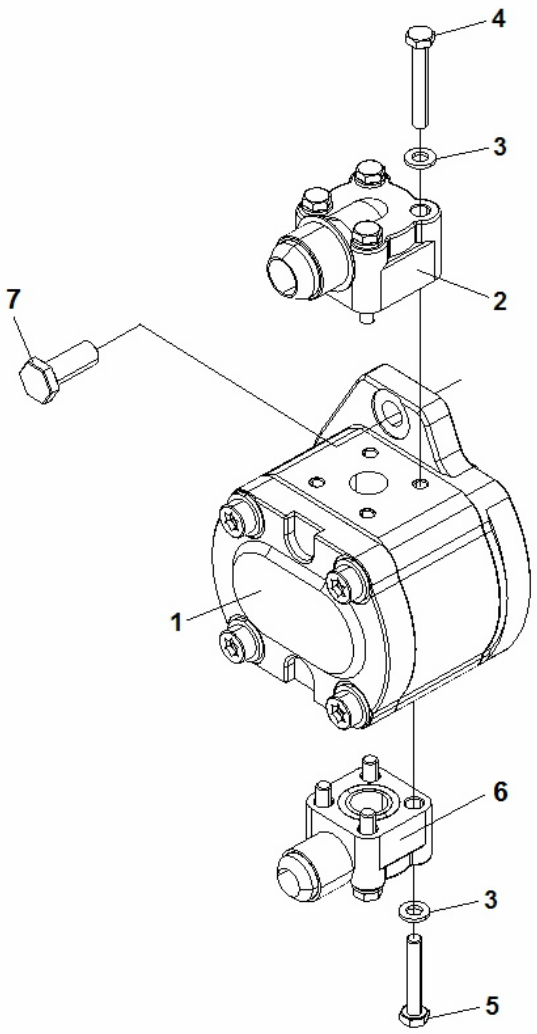

Item	Part No.	Name	Qty	L
1	4700198484	Pump Gear	1	
2	4700904786	Flange fitting 90	1	
3	4700904228	Steel plain washer	8	
4	4700500088	Screw M6x40	4	
5	4700500061	Screw	4	
6	4700198787	Flange fitting 90	1	
7	4812100866	Screw	2	

4812100931 Transmission Module 4812100936 Fan Drive Pump Module

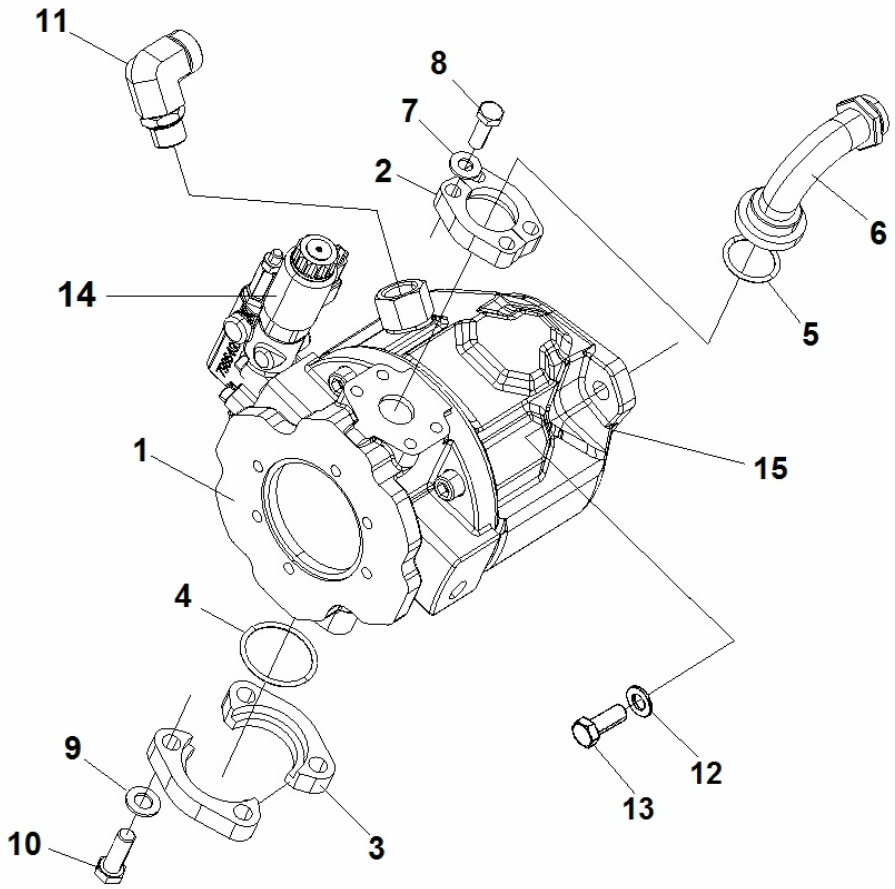

Item	Part No.	Name	Qty	L
1	4812100667	Hydraulic pump	1	
2	4700232097	Flange half	2	
3	4700232118	Flange	2	
4	4700160191	O-ring	1	
5	4700813429	O-ring	1	
6	4812100897	Flange fitting 90	1	
7	4700904230	Washer	4	
8	4700500029	Hex. screw	4	
9	4700904231	Steel plain washer, 13x24x2 mm 300 HV	4	
10	4700500037	Hex. screw	4	
11	4700791838	Adapter	1	
12	4700904231	Steel plain washer, 13x24x2 mm 300 HV	2	
13	4700502058	Screw	2	
14	4812101880	Control valve	1	
15	4700243198	Gasket	1	

4812100932 Transmission 4812100932 Transmission

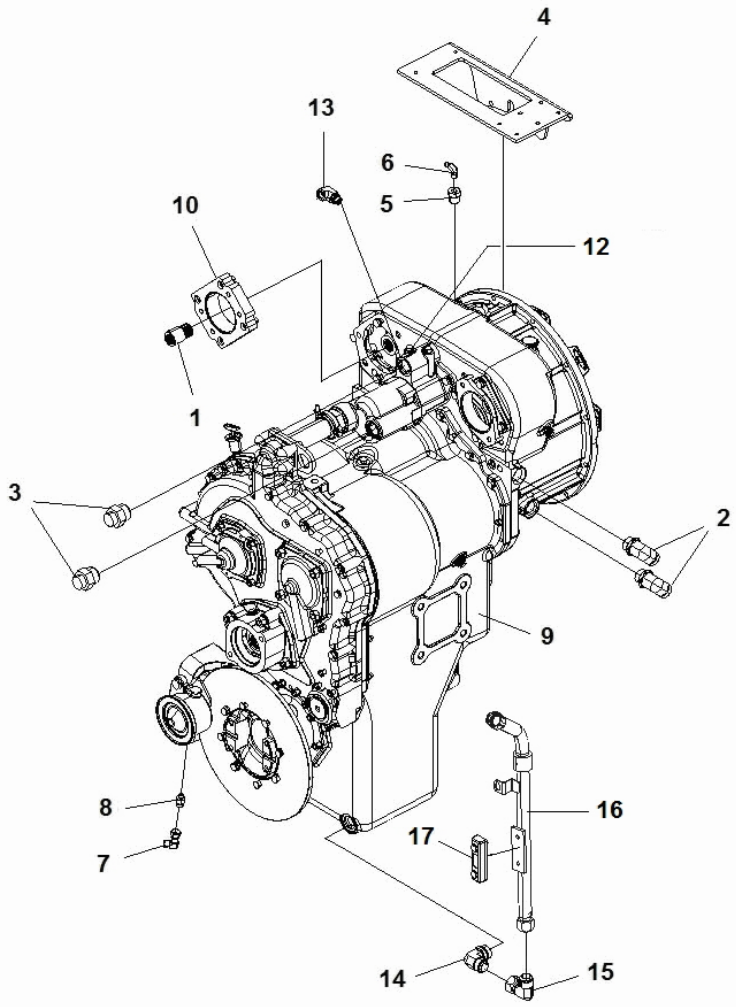

Item	Part No.	Name	Qty	L
1	4812101097	Bushing	1	
2	4700792299	Adapter	2	
3	4700334161	Straight connector	2	
4	4700199685	Bracket	1	
5	4700234820	Reducing nipple	1	
6	4700334549	Elbow 90°	1	
7	4700334524	Elbow 90°	1	
8	4700334232	Straight connector	1	
9	4812101120	Transmission case & torque converter 3600 Series - 4 speed	1	
10	4812101229	Flange module	1	
12	4700792632	O-ring	1	
13	4700791846	Adapter	1	
14	4700334163	Connector elbow 90°	1	
15	4700334239	Elbow 90G	1	
16	4812101803	Fill Tube	1	
17	4700989151	Oil level glass	1	

4812101120 Transmission case & torque converter 3600 Series - 4 speed 4812101120 Transmission case & torque converter 3600 Series - 4 speed

NO DRAWING AVAILABLE FOR THIS BOM

Item	Part No.	Name	Qty	L
30	-	Housing assembly	1	
35	-	Rear cover & dipstick	1	
40	-	Turbine shaft, stator support & oil buffle	1	
45	-	Wheel assembly	1	
50	-	Drive plates assembly	1	
55	-	Pump drive assembly	1	
60	-	Forward clutch shaft	1	
65	-	3rd speed clutch shaft	1	
70	-	Reverse and 2nd shaft clutch	1	
75	-	1st speed clutch shaft assembly	1	
80	-	4th speed clutch shaft	1	
85	-	Idler shaft assembly	1	
90	-	Output shaft assembly	1	
110	-	Pressure regulating valve & charging pump	1	
115	-	Electric control & less declutch assembly	1	
120	-	Pump adapter assembly	1	

4812101120 Transmission case & torque converter 3600 Series - 4 speed Pump adapter assembly

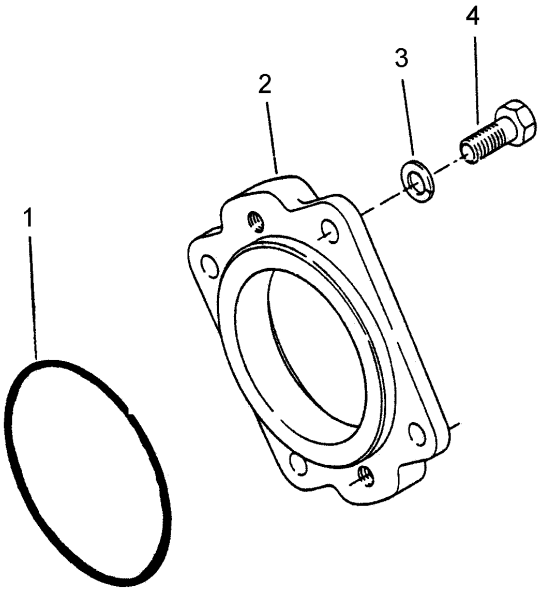

Item	Part No.	Name	Qty	L
1	4700193700	O-ring	1	
2	4700198965	Pump adapter	1	
3		Spring washer	4	
4	4700170521	Screw	4	

4812101120 Transmission case & torque converter 3600 Series - 4 speed Electric control & less declutch assembly

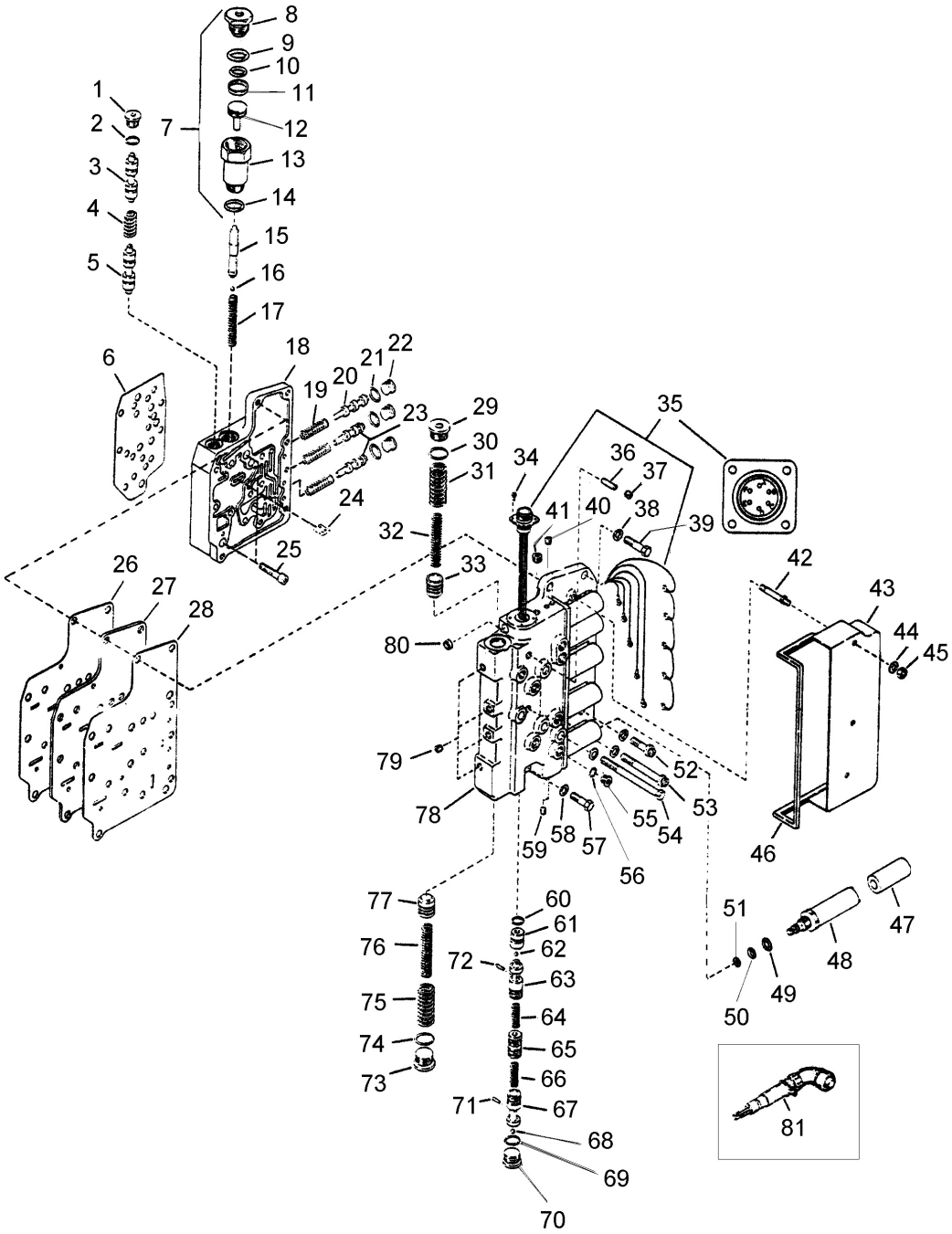

Item	Part No.	Name	Qty	L
1	-	Plug	1	
2	4700199893	O-ring	1	
3	-	Directional spool	1	
4	4700170468	Directional spool spring	1	
5		Directional spool	1	
6	4700170516	Housing gasket	1	
7	-	Air actuator ass'y	1	
8	4700170470	Plug	1	
9	4700170471	O-ring	1	
10	-	O-RING	1	
11	-	Glyd ring	1	
12	4700170474	Piston	1	
13	-	Piston housing	1	
14	-	O-RING	1	
15	-	Declutch spool ass'y	1	
16		Plug	1	
16	-	Plug	1	
17	-	Declutch spool spring	1	
18	4700170480	Control valve housing	1	
19	-	Range spool spring	3	
20	-	Range spool	1	
21	4700199893	O-ring	3	
22	-	Spool plug	3	
23	-	Range spool	2	
24	4700240609	Clamp	1	
25	-	Housing screw	2	
26	4700170485	Seal plate gasket	1	
27	-	Seal plate	1	
28	4700170485	Seal plate gasket	1	
29	-	Pipe plug	1	
30	-	O-RING	1	
31	-	Accumulator spring - outer	1	
31	-	Accumulator spring - middle	1	
32	-	Accumulator spring - inner	1	
32	-	Accumulator stop pin	1	
33	-	Accumulator spool	1	
36	-	Roll pin	2	

Item	Part No.	Name	Qty	L
37	4700170495	Plug	2	
38	4700199860	Spring washer	1	
39	-	Screw	1	
40	4700170495	Plug	2	
41	-	Plug	1	
42	-	Flat gasket	3	
43	-	Dust cover	1	
44	-	Washer	3	
45	4700170500	Nut	3	
46	-	Not used on this model	1	
47	4812101129	Solenoid coil	5	
48	4700170502	Solenoid cartridge	5	
48	-	O-RING	10	
48	-	Nut	5	
49	4700170505	O-ring	5	
50	4700170506	O-ring	5	
51	4700170507	O-ring	5	
52	-	Screw	4	
53	-	Screw	2	
54	-	Screw	5	
55	4700199843	Port plug	8	
56	4700199844	O-ring	8	
57	4700240561	Screw	1	
58	4700199860	Spring washer	12	
59	4700170495	Plug	2	
60	-	O-RING	1	
61	-	Valve stop	1	
62	4700199960	Ball	1	
63	-	Regulator spool ass'y	1	
64	-	Regulator spring	1	
65	-	Valve stop	1	
66	-	Regulator spring	1	
67	-	Regulator spool ass'y	1	
68	4700199960	Ball	1	
69	4700199893	O-ring	1	
70		Spool plug	1	
71	-	Regulator spool plug	1	

Item	Part No.	Name	Qty	L
72	-	Regulator spool plug	1	
73		Pipe plug	1	
74		O-ring	1	
75	4700170489	Accumulator spring - outer	1	
75		Accumulator spring - middle	1	
76		Accumulator spring - inner	1	
76		Accumulator stop pin	1	
77		Accumulator spool	1	
78	-	Control cover ass'y	1	
79	4700170495	Plug	4	

4812101120 Transmission case & torque converter 3600 Series - 4 speed Pressure regulating valve & charging pump

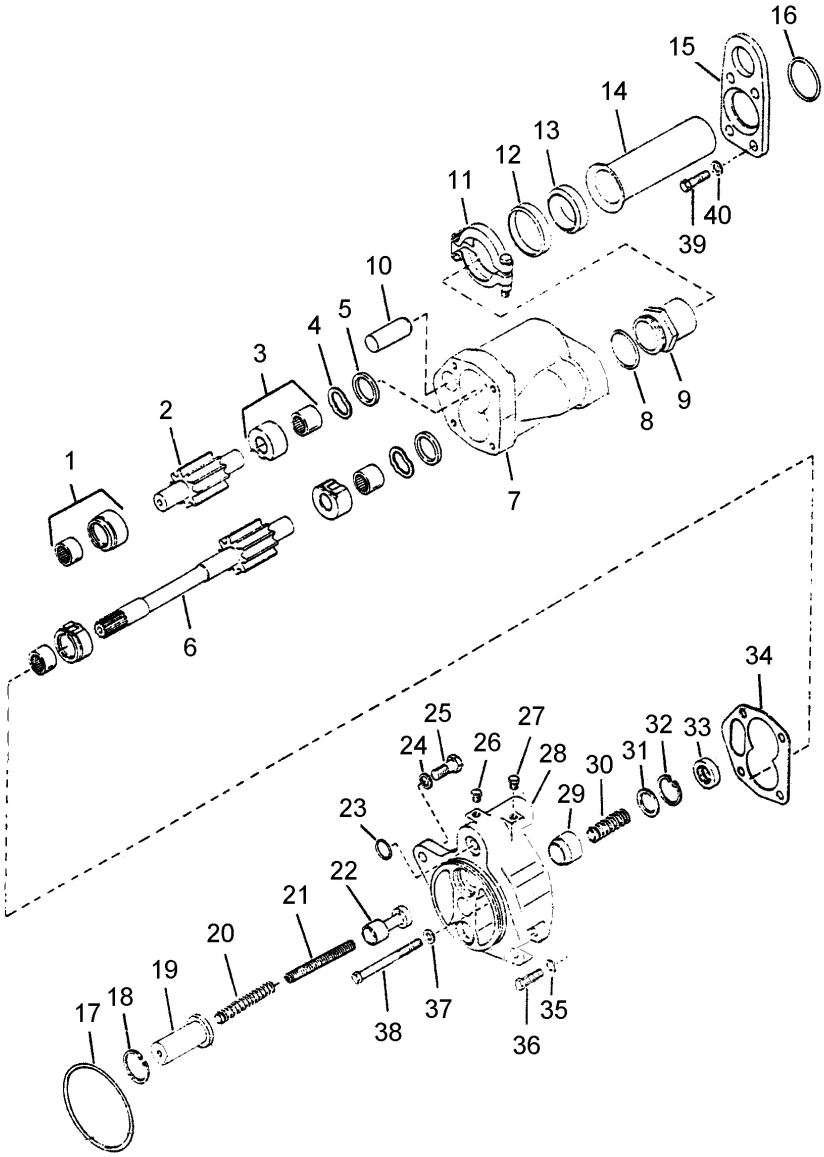

Item	Part No.	Name	Qty	L
1	-	Thrust plate & bearing	2	
2	4700170426	Pump drive shaft	1	
3	-	Thrust plate & bearing ass'y	2	
4	-	Wave spring	2	
5	-	Pump shaft seal	1	
6	4700170430	Pump drive shaft ass'y	1	
7	4700170431	Charging pump ass'y	1	
8	-	O-RING	1	
9	-	Pump suction adapter	1	
10	-	Not used on this model	1	
11	-	Coupling	1	
12	4700170435	Retainer	1	
13	4700170436	Gasket	1	
14	-	Tube sleeve	1	
15	4700170438	Flange plate	1	
16	4700170439	O-ring	1	
17	4700193700	O-ring	1	
18	-	Snap Ring	1	
19	-	Valve spring retainer cup	1	
20	4700170442	Valve spring - outer	1	
21	4700170443	Valve spring - inner	1	
22	-	Regulator valve spool	1	
23	4700193659	O-ring	1	
24		Spring washer	2	
25	-	Screw	2	
26	-	Plug	1	
27	4700170447	Plug	1	
28	4700170448	Pressure regulator valve ass'y	1	A
29	-	Safety valve piston	1	
30	4700170450	Safety valve piston spring	1	
31	4700170451	Piston spring retainer	1	
32	-	Snap Ring	1	
33	-	Pump shaft oil seal	1	
34	4700170454	Gasket	1	
35	4700199860	Spring washer	2	
36	4700170455	Screw	2	
37	4700199860	Spring washer	2	

Item	Part No.	Name	Qty	L
38	4700170456	Screw	2	
39	-	Screw	4	
40		Spring washer	4	

Comments for Page: Pressure regulating valve & charging pump

(L)OCAL REMARKS

A | en_US | Incluse itens 18, 22, 26, 33

4812101120 Transmission case & torque converter 3600 Series - 4 speed Output shaft assembly

This page intentionally left blank

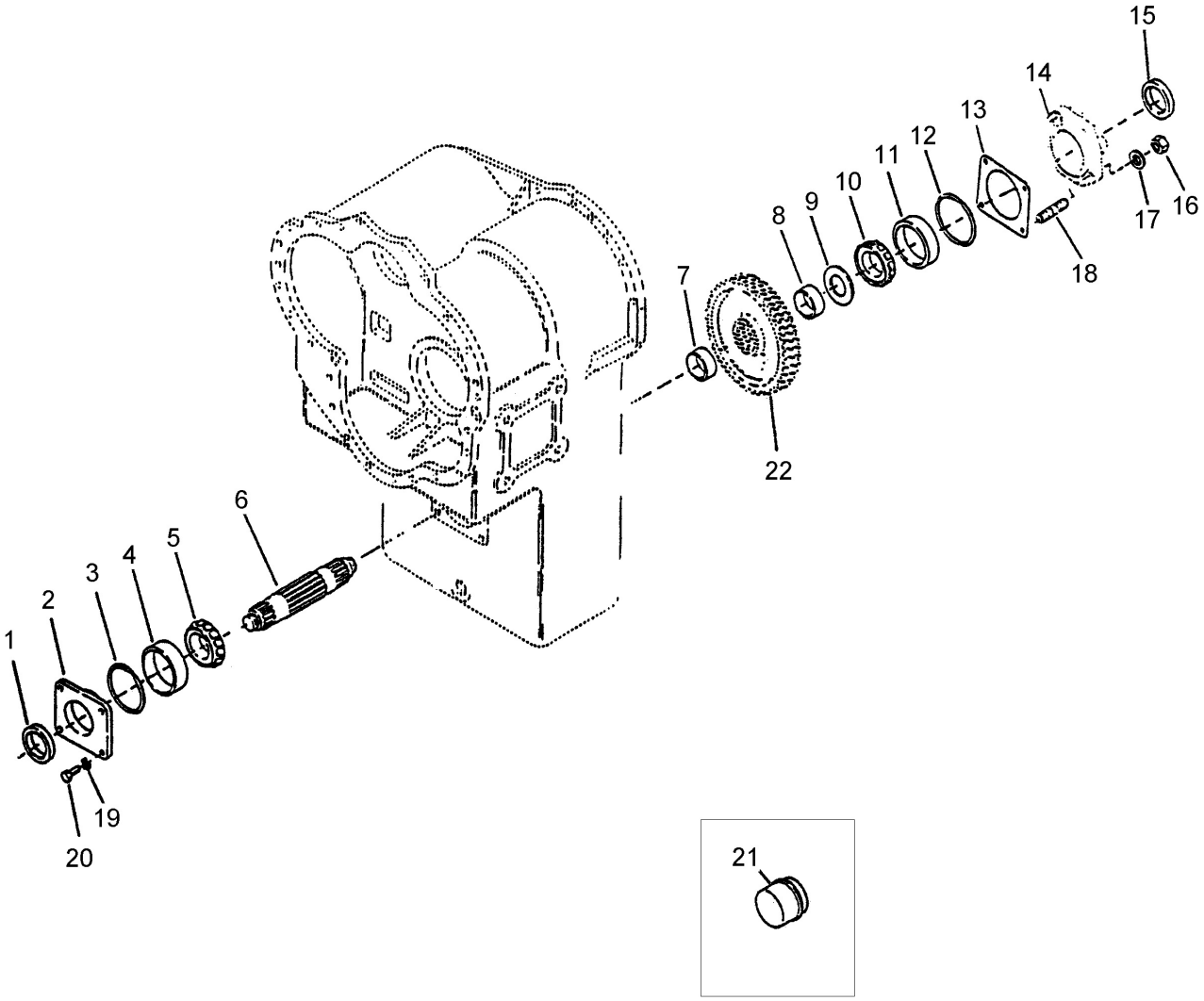
15
14
13
12
11
10
9
8
7
16
17
18
22
6
5
4
3
2
1
19
20
21

Item	Part No.	Name	Qty	L
1	4700170379	Oil seal	1	
2	-	Front bearing cap	1	
3	4700199931	O-ring	1	
4	-	Bearing cup	1	
5	4700170382	Bearing cone	1	
6	-	Output shaft	1	
7	-	Output shaft gear spacer	1	
8	4700170385	Output shaft gear spacer	1	
9	-	Thrust washer	1	
10	4700170382	Bearing cone	1	
11	-	Bearing cup	1	
12	4700199931	O-ring	1	
13	-	Shim	CN	
14	-	Rear bearing cap	1	
15	4700170379	Oil seal	1	
16	-	Nut	7	
17		Spring washer	7	
18	-	Flat gasket	7	
19	4700199885	Spring washer	9	
20	-	Screw	9	
22	-	Output shaft gear	1	

4812101120 Transmission case & torque converter 3600 Series - 4 speed Idler shaft assembly

SPEEDO DRIVE & EMERGENCY STEER PUMP ASSY

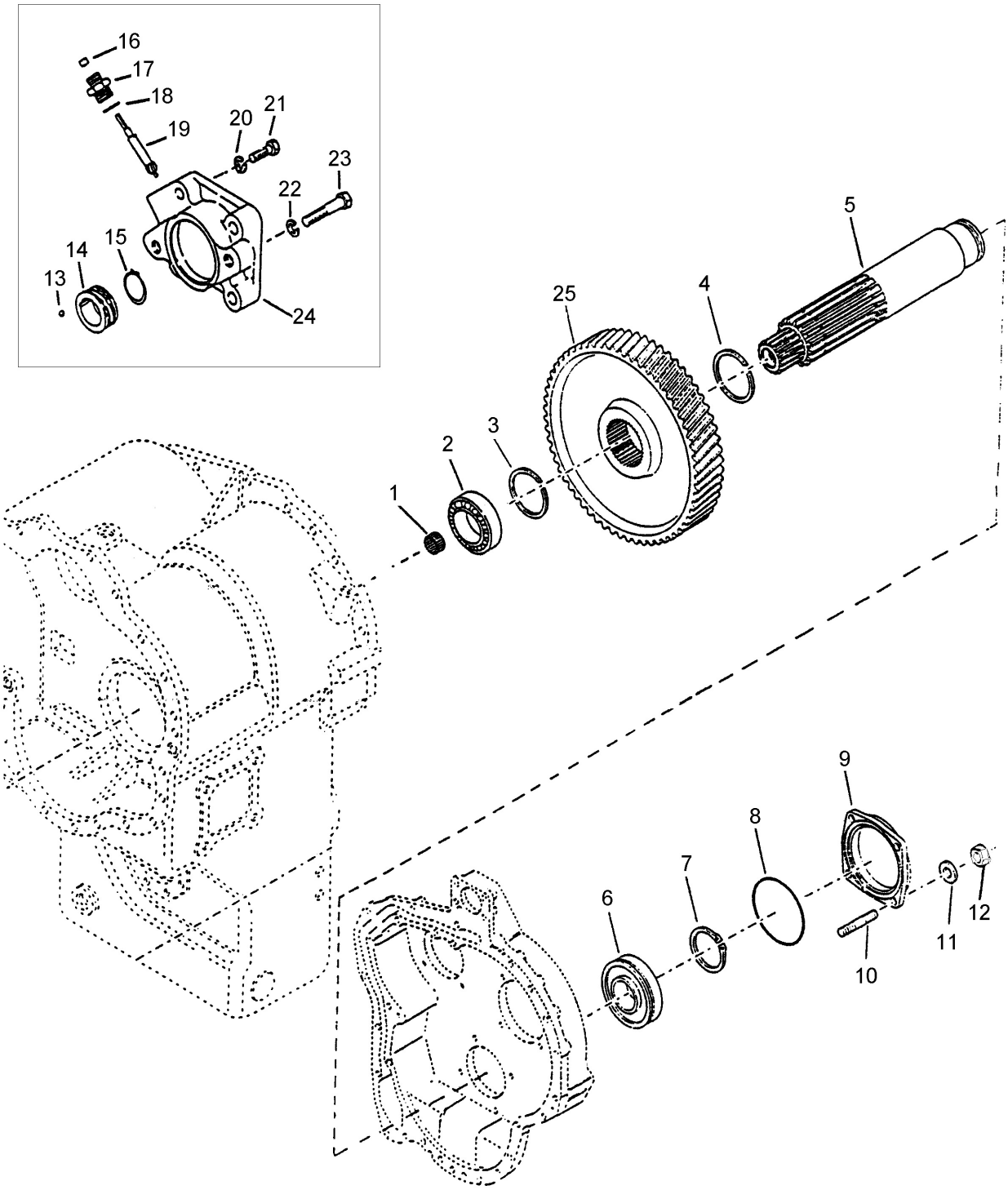

Item	Part No.	Name	Qty	L
1	4700170364	Needle bearing	1	
2	4700170365	Bearing	1	
3	4700170366	Snap ring	1	
4	4700170366	Snap ring	1	
5	-	Idler shaft	1	
6	-	Piston guides	1	
7	-	Snap Ring	1	
8	4700170371	O-ring	1	
9		Rear bearing cap	1	
10	4700170373	Stud	2	
11		Spring washer	4	
12		Nut	4	
13	-	Lock ball	1	
14	4700170375	Gear 50T	1	
15	-	Snap Ring	1	
16	-	O-RING	1	
17	4700199840	Plug	1	
18	4700199846	O-ring	1	
19	-	Spring washer	1	
20	-	Washer	1	
21	-	Screw	1	
22	-	Spring washer	1	
23	-	Screw	1	
24	-	Rear bearing cap	1	
25	-	Gear	1	

4812101120 Transmission case & torque converter 3600 Series - 4 speed 4th speed clutch shaft

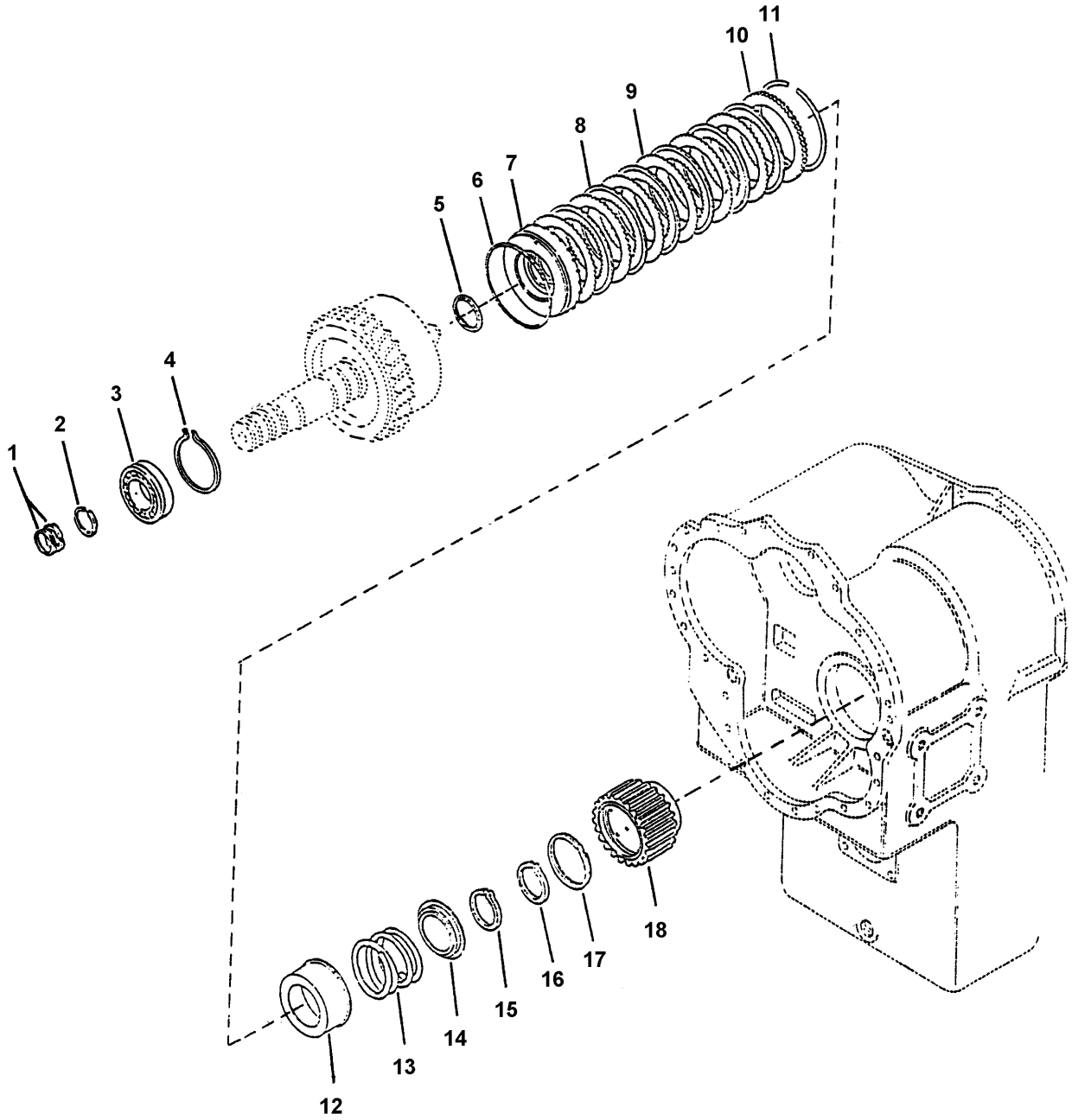

Item	Part No.	Name	Qty	L
1	4700193683	Piston ring	2	
2		Snap ring	1	
3		Bearing	1	
4	4700240615	Snap ring	1	
5	4700199958	Clutch piston inner seal	1	
6	4700199990	Seal ring	1	
7	4700199989	Seals ass'y	1	
8		Clutch inner disc	6	
9		Clutch outer disc	6	
10		Clutch disc backing plate	1	
11	4700199952	Snap ring	1	
12		Thrust washer	1	
13		Piston return spring	1	
14		Spring retainer	1	
15	4700240626	Snap ring	1	
16		Snap ring	1	
17	-	Ring	1	
18	4812317689	Clutch disc hub	1	

4812101120 Transmission case & torque converter 3600 Series - 4 speed 1st speed clutch shaft assembly

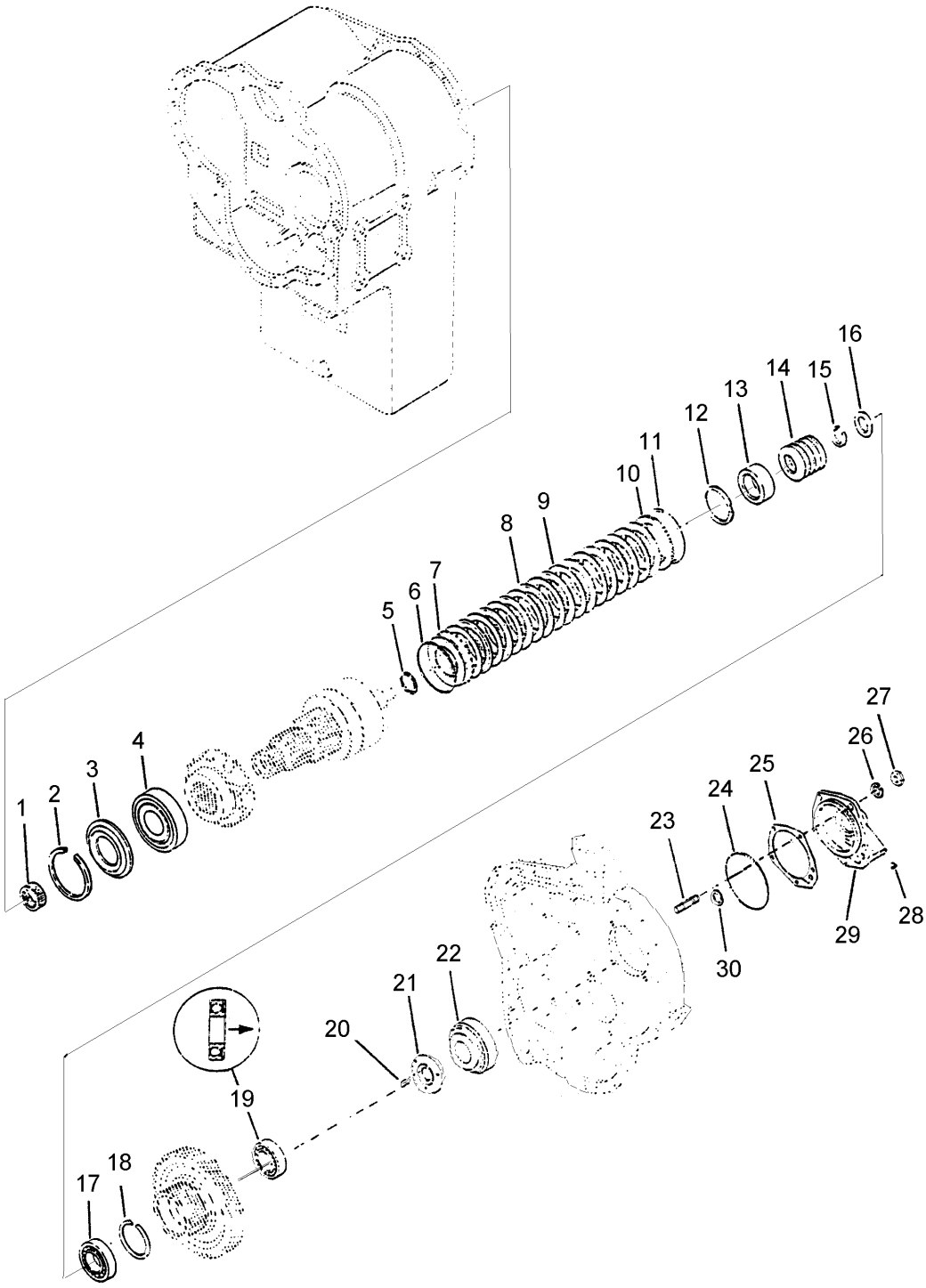

Item	Part No.	Name	Qty	L
1	4700199997	Needle bearing	1	
2		Snap ring	1	
3		Bearing spacer	1	
4		Bearing cup	1	
4		Bearing cone	1	
5	4700199958	Clutch piston inner seal	1	
6	4700199990	Seal ring	1	
7		Seals ass'y	1	
8		Clutch inner disc	10	
9		Clutch outer disc	10	
10		Clutch disc backing plate	1	
11	4700199952	Snap ring	1	
13		Spring retainer	1	
14		Piston return spring	1	
14		Spring and snap ring retainer	1	
15		Snap ring	1	
16		Spacer	1	
17		Bearing	1	
18		Snap ring	1	
19		Ball bearing	1	
21		Thrust washer	1	
22		Bearing	1	
23	4700193701	Stud	4	
24	4700193700	O-ring	1	
25		Shim (.004)	CN	
25		Shim (.007)	CN	
25		Shim (.010)	CN	
25		Shim (.020)	CN	
26	4700199885	Spring washer	4	
27	4700199874	Nut	4	
28	4700199843	Port plug	2	
29		Rear bearing cap	1	
30	4700193683	Piston ring	2	

4812101120 Transmission case & torque converter 3600 Series - 4 speed Reverse and 2nd shaft clutch

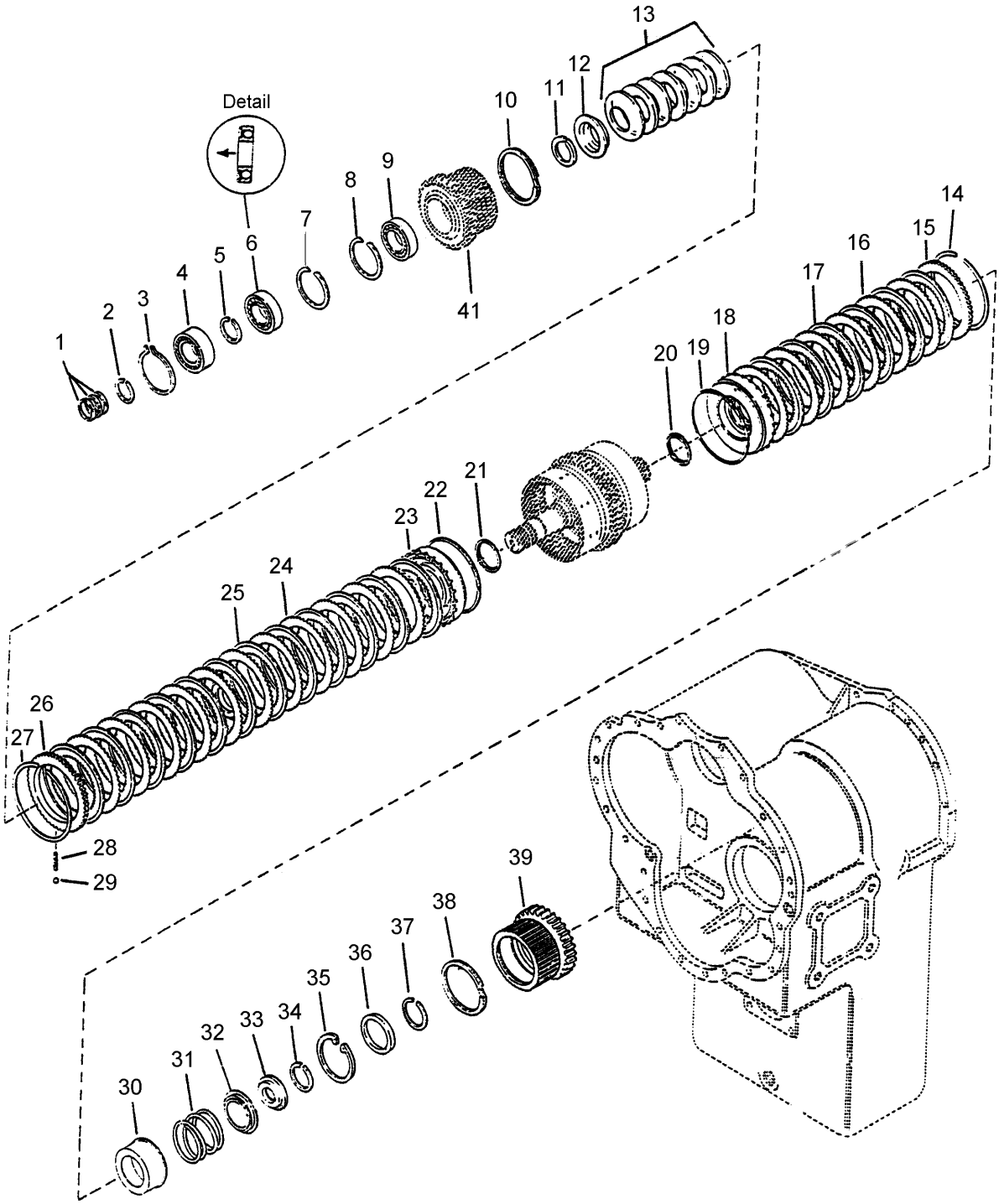

Item	Part No.	Name	Qty	L
1	4700193683	Piston ring	3	
2	4700199932	Snap ring	1	
3	4700240593	Snap ring	1	
4		Bearing	1	
5	4700199932	Snap ring	1	
6		Bearing	1	
7		Snap ring	1	
8		Snap ring	1	
9		Bearing	1	
10	4700199949	Seal ring	1	
11	4700240626	Snap ring	1	
12	4700199950	Spring retainer	1	
13		Disc spring	1	
14	4700199952	Snap ring	1	
15		Clutch disc backing plate	1	
16		Clutch outer disc	6	
17		Clutch inner disc	6	
18	4700199989	Seals ass'y	1	
19	4700199990	Seal ring	1	
20	4700199958	Clutch piston inner seal	1	
21	4700199958	Clutch piston inner seal	1	
22	4700199957	Clutch piston outer seal	1	
23		Clutch piston and seals ass'y	1	
24		Clutch outer disc	11	
25		Clutch inner disc	12	
26		Clutch disc backing plate	1	
27	4700199952	Snap ring	1	
28	4700199959	Spring retainer	1	
29	4700199960	Ball	1	
30		Thrust washer	1	
31		Piston return spring	1	
32		Spring retainer	1	
33	-	Not used on this model	1	
34	4700240626	Snap ring	1	
35		Snap ring	1	
36		Ring retainer	1	
37		Snap ring	1	

Item	Part No.	Name	Qty	L
38	-	Not used on this model	1	
39		Clutch disc hub	1	

4812101120 Transmission case & torque converter 3600 Series - 4 speed 3rd speed clutch shaft

This page intentionally left blank

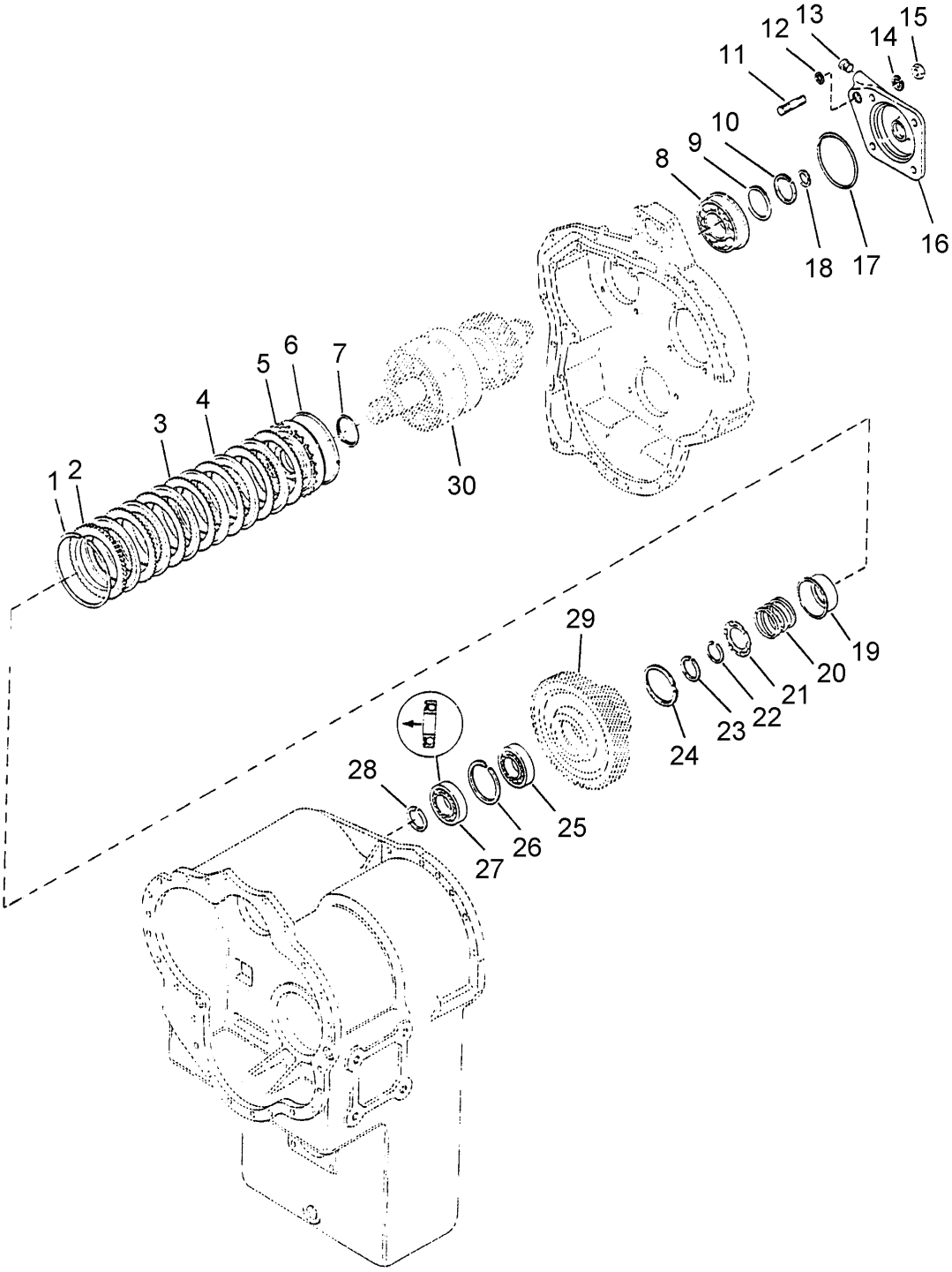
1
2
3
4
5
6
7
8
9
10
11
12
13
14
15
16
17
18
19
20
21
22
23
24
25
26
27
28
29
30

Item	Part No.	Name	Qty	L
1		Snap ring	1	
2		End plate	1	
3		Clutch outer disc	12	
4		Clutch inner disc	12	
5		Clutch piston and seals ass'y	1	
6	4700199969	Clutch piston outer seal	1	
7	4700199958	Clutch piston inner seal	1	
8		Bearing	1	
10		Snap ring	1	
11		Stud	4	
12	4700199838	O-ring	1	
13	4700199843	Port plug	1	
14		Spring washer	1	
15		Nut	4	
16		Rear bearing cap	1	
17	4700199974	O-ring	1	
18	4700199975	Piston ring	1	
19		Spring retainer	1	
20		Piston return spring	1	
21		Spring and snap ring retainer	1	
22		Snap ring	1	
23		Snap ring	1	
24	-	Not used on this model	1	
25		Bearing	1	
26		Snap ring	1	
27		Ball bearing	1	
28		Snap ring	1	

4812101120 Transmission case & torque converter 3600 Series - 4 speed Forward clutch shaft

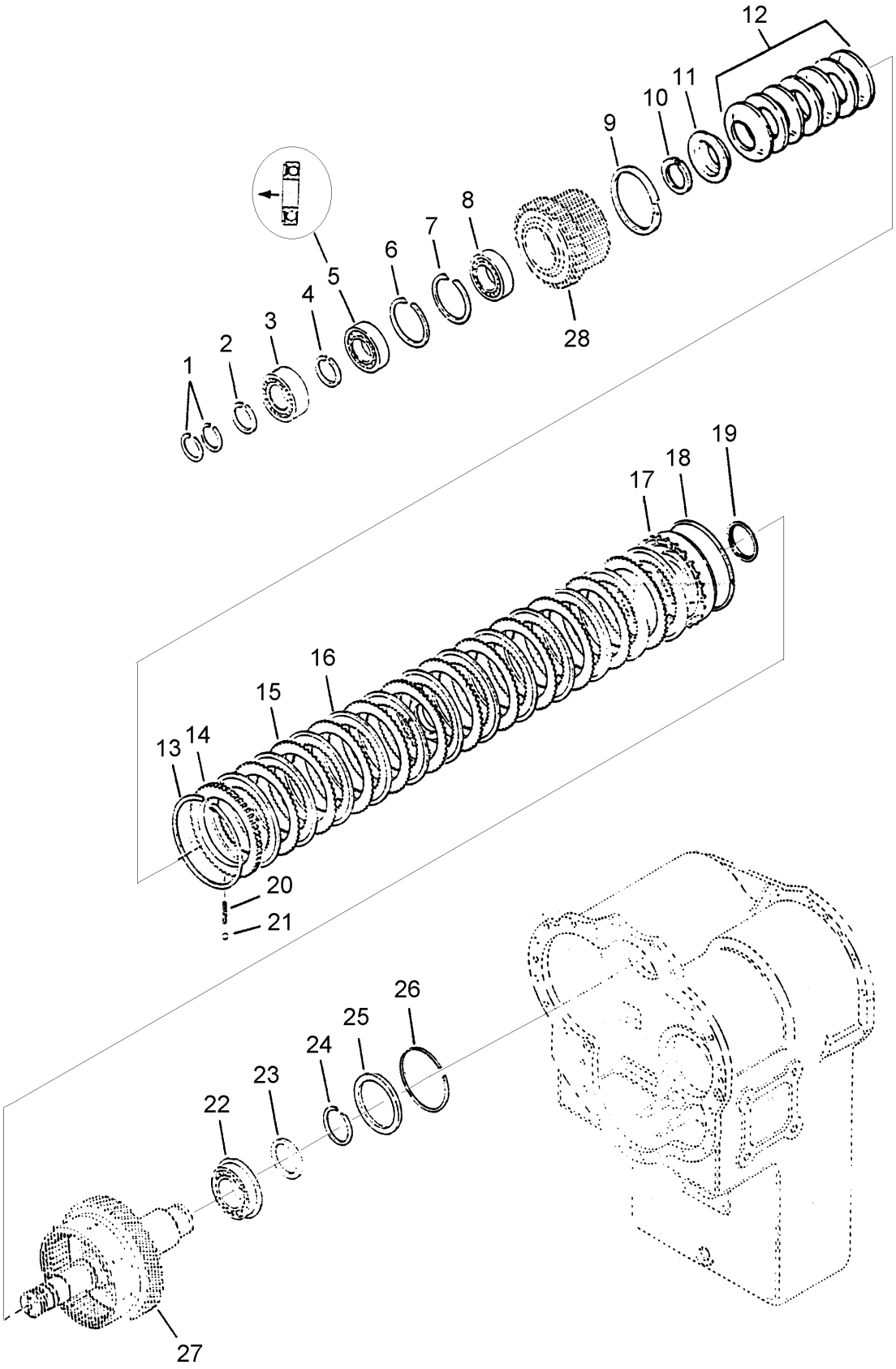

Item	Part No.	Name	Qty	L
1	4700193683	Piston ring	2	
2	4700199932	Snap ring	1	
3		Bearing	1	
4	4700199932	Snap ring	1	
5		Bearing	1	
6		Snap ring	1	
7		Snap ring	1	
8		Bearing	1	
9	4700199949	Seal ring	1	
10	4700240626	Snap ring	1	
11	4700199950	Spring retainer	1	
12		Disc spring	1	
13	4700199952	Snap ring	1	
14		Clutch disc backing plate	1	
15		Clutch outer disc	11	
16		Clutch inner disc	12	
17		Clutch piston and seals ass'y	1	
18	4700199957	Clutch piston outer seal	1	
19	4700199958	Clutch piston inner seal	1	
20	4700199959	Spring retainer	1	
21	4700199960	Ball	1	
22		Bearing	1	
23		Retaining ring	1	
24		Snap ring	1	

4812101120 Transmission case & torque converter 3600 Series - 4 speed Pump drive assembly

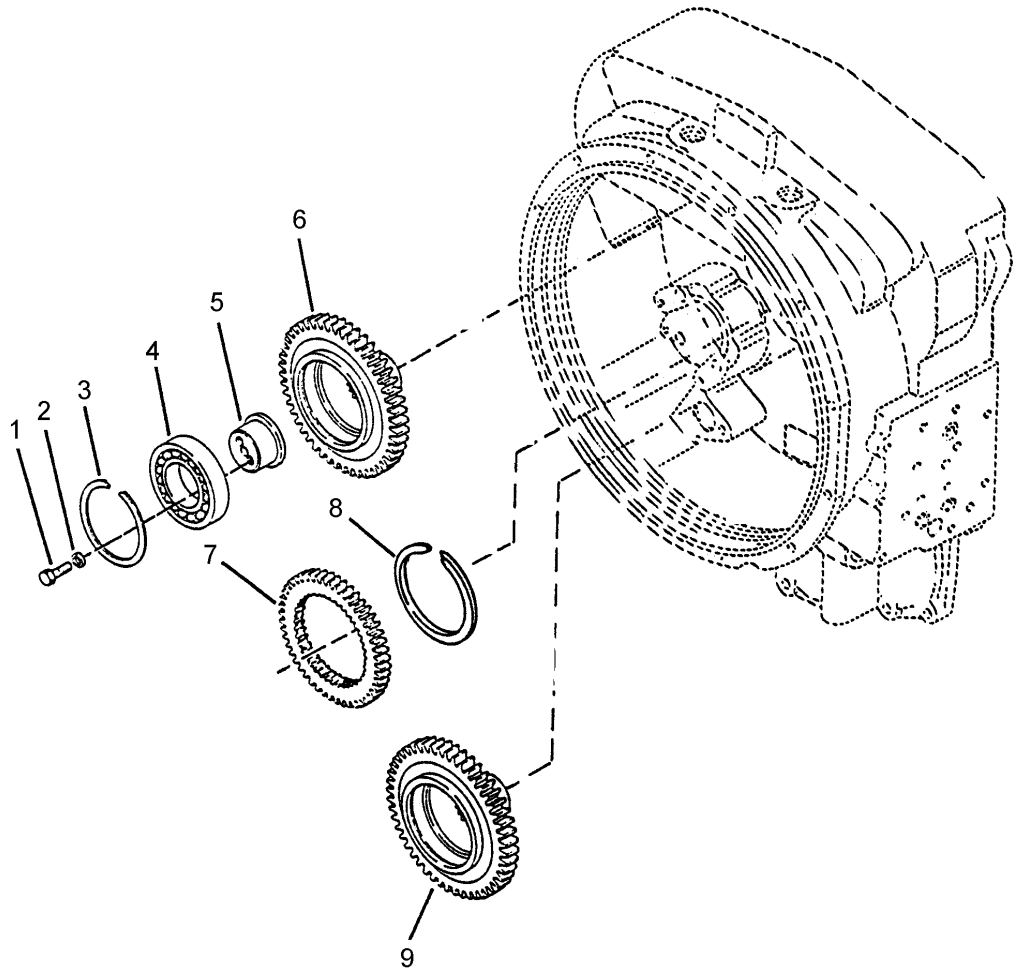

Item	Part No.	Name	Qty	L
1	4700199938	Screw	6	
2		Spring washer	6	
3	4700199939	Snap ring	3	
4	4700240591	Bearing	3	
5	4700199940	Bearing support	3	
6	4700199941	Pump drive gear (55T)	1	
7	4700199942	Impeller hub gear (56T)	1	
8	4700199943	Snap ring	1	
9	4700199944	Auxiliary pump drive gear (56T)	1	

4812101120 Transmission case & torque converter 3600 Series - 4 speed Drive plates assembly

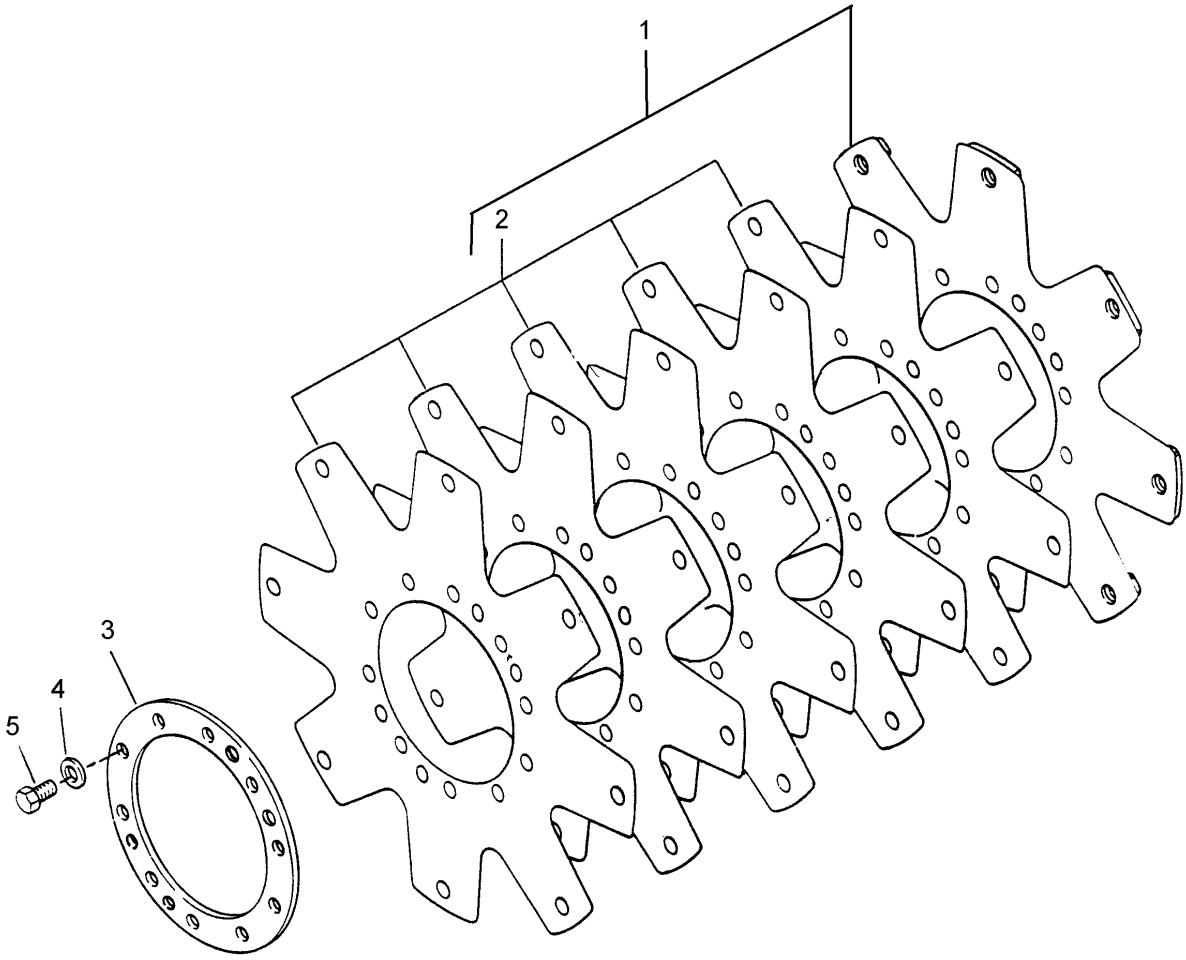

Item	Part No.	Name	Qty	L
1	4700199928	Drive plate kit	1	
.2	4700198803	Drive plate	5	
3	4700199927	Backing ring	1	
4	-	Washer	1	
5	-	Screw	14	

4812101120 Transmission case & torque converter 3600 Series - 4 speed Wheel assembly

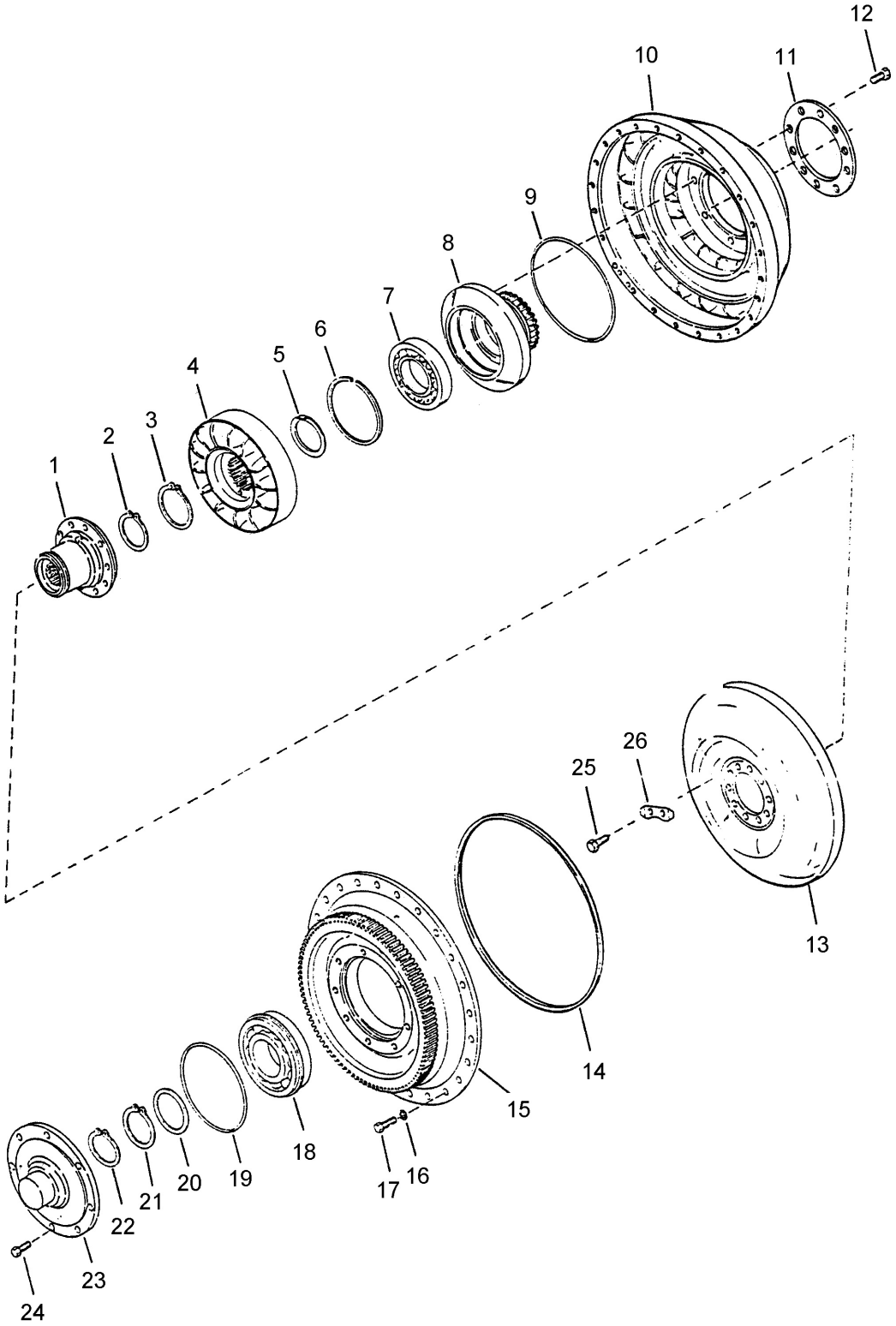

Item	Part No.	Name	Qty	L
1	-	Turbine hub	1	
2	-	Snap Ring	1	
3	4700199904	Snap ring	1	
4	4700199915	Reaction member	1	
5	4700199916	Spacer	1	
6	4700199936	Snap ring	1	
7	4700199937	Impeller hub bearing	1	
8	4700199919	Impeller hub	1	
9	4700199920	O-ring	1	
10	4700199921	Impeller hub	1	
11	4700199922	Backing ring	1	
12	4700199923	Screw	8	
13	4700199924	Turbine	1	
14	4700199925	O-ring	1	
15	4700199926	Impeller cover	1	
16	4700199885	Spring washer	24	
17	4700199929	Screw	24	
18	4700199930	Impeller hub bearing	1	
19	4700199931	O-ring	1	
20	4700199905	Washer	1	
21	4700199904	Snap ring	1	
22	4700199932	Snap ring	1	
23	4700199933	Impeller cover hub	1	
24	-	Screw	8	
25	4700199934	Screw	10	
26	-	Spring washer	5	

4812101120 Transmission case & torque converter 3600 Series - 4 speed Turbine shaft, stator support & oil buffle

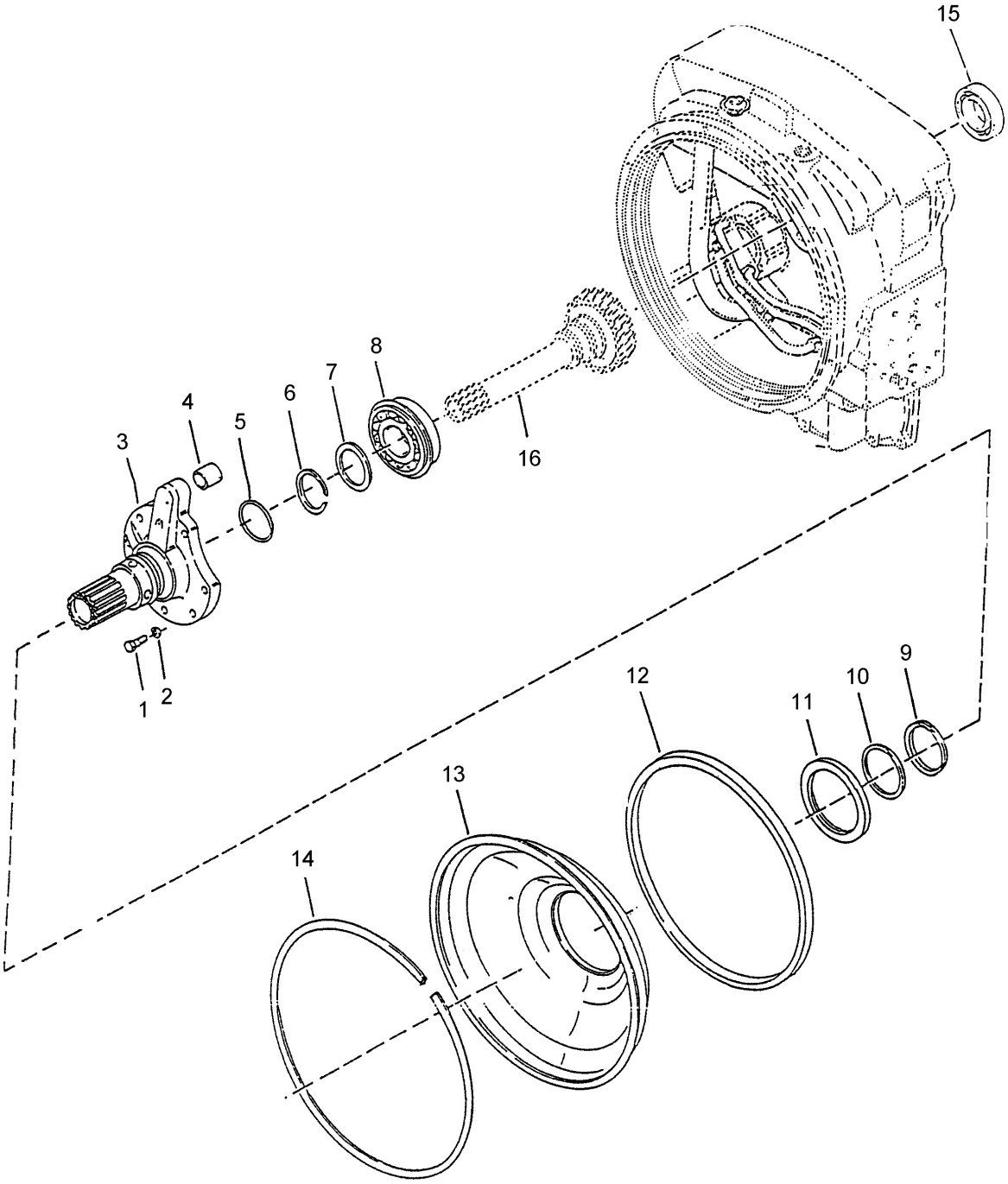

Item	Part No.	Name	Qty	L
1	4700199899	Screw	7	
2	-	Spring washer	7	
3	4700199901	Scored shaft with flange	1	
4	4700199902	Coverter inlet tube	1	
5	4700199903	Ring	1	
6	4700199904	Snap ring	1	
7	4700199905	Washer	1	
8	-	Turbine shaft bearing	1	
9	4700199907	Ring	1	
10	4700199841	Tube	1	
11	4700199908	Oil seal	1	
12	4700199909	Seal ring	1	
13	-	Oil baffle	1	
14	-	Retainer ring	1	
15	-	Turbine shaft rear bearing	1	
16	-	Turbine shaft	1	

4812101120 Transmission case & torque converter 3600 Series - 4 speed Rear cover & dipstick

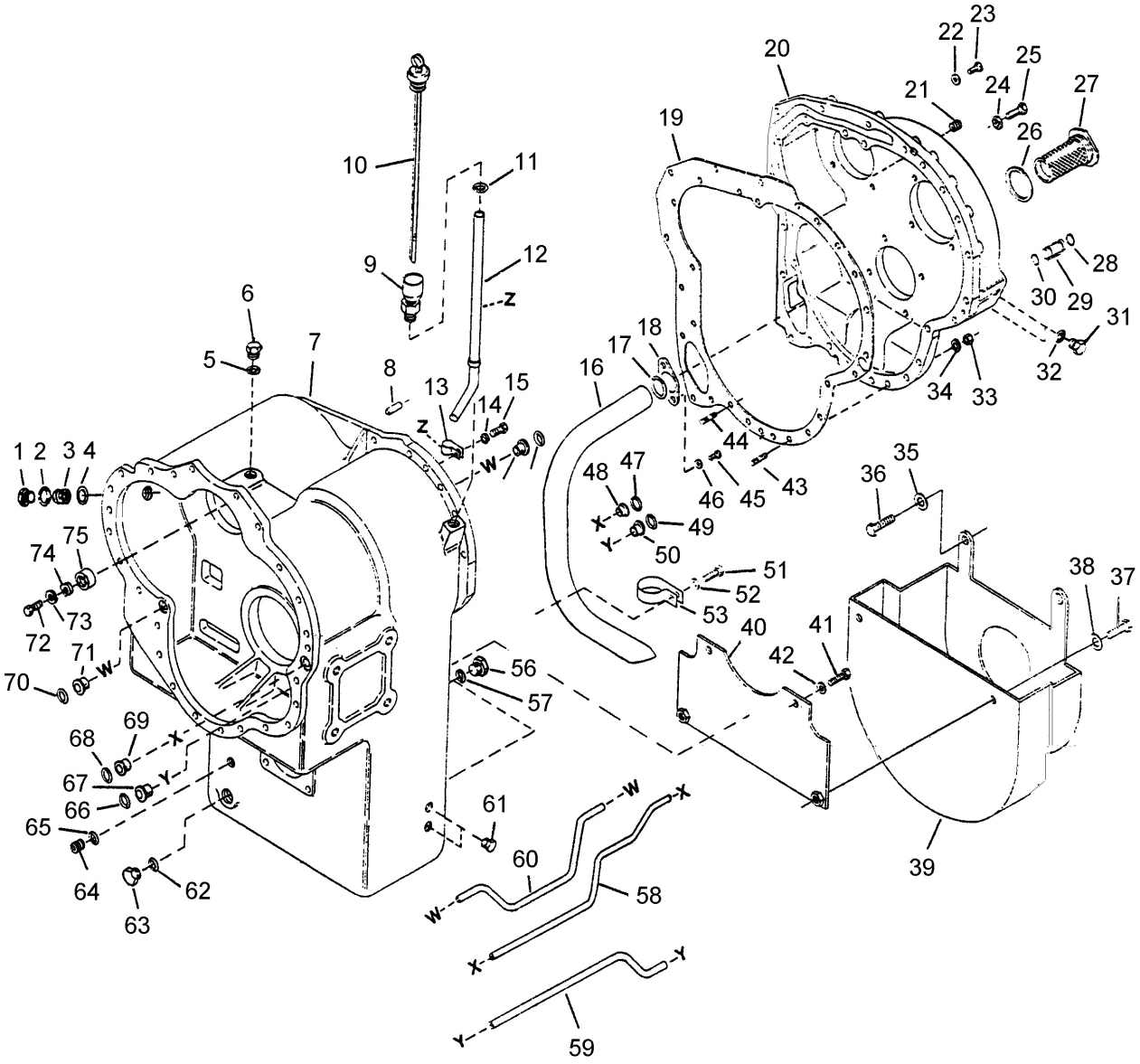

Item	Part No.	Name	Qty	L
1	4700199840	Plug	1	
2	4700199846	O-ring	1	
3	4700199847	Adjusting bushing	1	
4	4700199848	Adjusting bushing shim	1	
5	4700938448	O-ring	1	
6	4700199855	Plug	1	
7	4700199856	Transmission housing	1	
8	4700199857	Dowel pin	2	
12	4700199858	Dispstick tube	1	
13	4700199859	Dispstick clip	1	
14	4700199860	Spring washer	1	
15	4700199861	Screw	1	
16	4700199862	Suction tube	1	
17	4700199863	O-ring	1	
18	4700199864	Tube flange	1	
19	4700199865	Gasket	1	
20	-	Rear cover	1	
22	4700199885	Spring washer	5	
23	4700199867	Screw	5	
24	4700199885	Spring washer	11	
25	4700199868	Screw	11	
26	4700199869	Gasket	1	
27	4700199870	Screen filter	1	
28	4700199871	O-ring	2	
29	4700199872	Sleeve	2	
30	4700199871	O-ring	2	
31	4700199855	Plug	2	
32	4700938448	O-ring	2	
33	4700199874	Nut	12	
34	4700199885	Spring washer	12	
35	4700199875	Spring washer	2	
36	4700199876	Screw	2	
37	4700199877	Screw	2	
38	4700199878	Washer	2	
39	4700199879	Baffle	1	
40	4700199880	Baffle fixation plate	1	
41	4700199881	Screw	2	

Item	Part No.	Name	Qty	L
42	4700199882	Washer	2	
43	4700199883	Stud	7	
44	4700199884	Stud	5	
45	4700199861	Screw	2	
46	4700199860	Spring washer	2	
47	4700193659	O-ring	1	
48	-	Sleeve	1	
49	4700193659	O-ring	1	
50	-	Sleeve	1	
51	4700199861	Screw	1	
52	4700199860	Spring washer	1	
53	4700199886	Clamp	1	
54	4700193659	O-ring	1	
55		Sleeve	1	
56	4700199887	Drain plug	2	
57	-	O-RING	2	
58	-	Tube	1	
59	-	Tube	1	
60	-	Tube	1	
61	-	Oil level plug	2	
62	4700199893	O-ring	1	
63	4700199845	Plug	1	
64	4700199894	Drain plug	1	
65		O-ring	1	
66	4700193659	O-ring	1	
67		Sleeve	1	
68	4700193659	O-ring	1	
69		Sleeve	1	
70	4700193659	O-ring	1	
71		Sleeve	1	
72		Screw	1	
73		Spring washer	1	
74		Sleeve lock	1	
75	4700199895	Ring sleeve	1	
76		Rear gauge plate	1	
77	4700199897	Rear gauge plate gasket	1	
78		Rear gauge plate screw	1	

Item	Part No.	Name	Qty	L
79	4700199860	Spring washer	1	

4812101120 Transmission case & torque converter 3600 Series - 4 speed Housing assembly

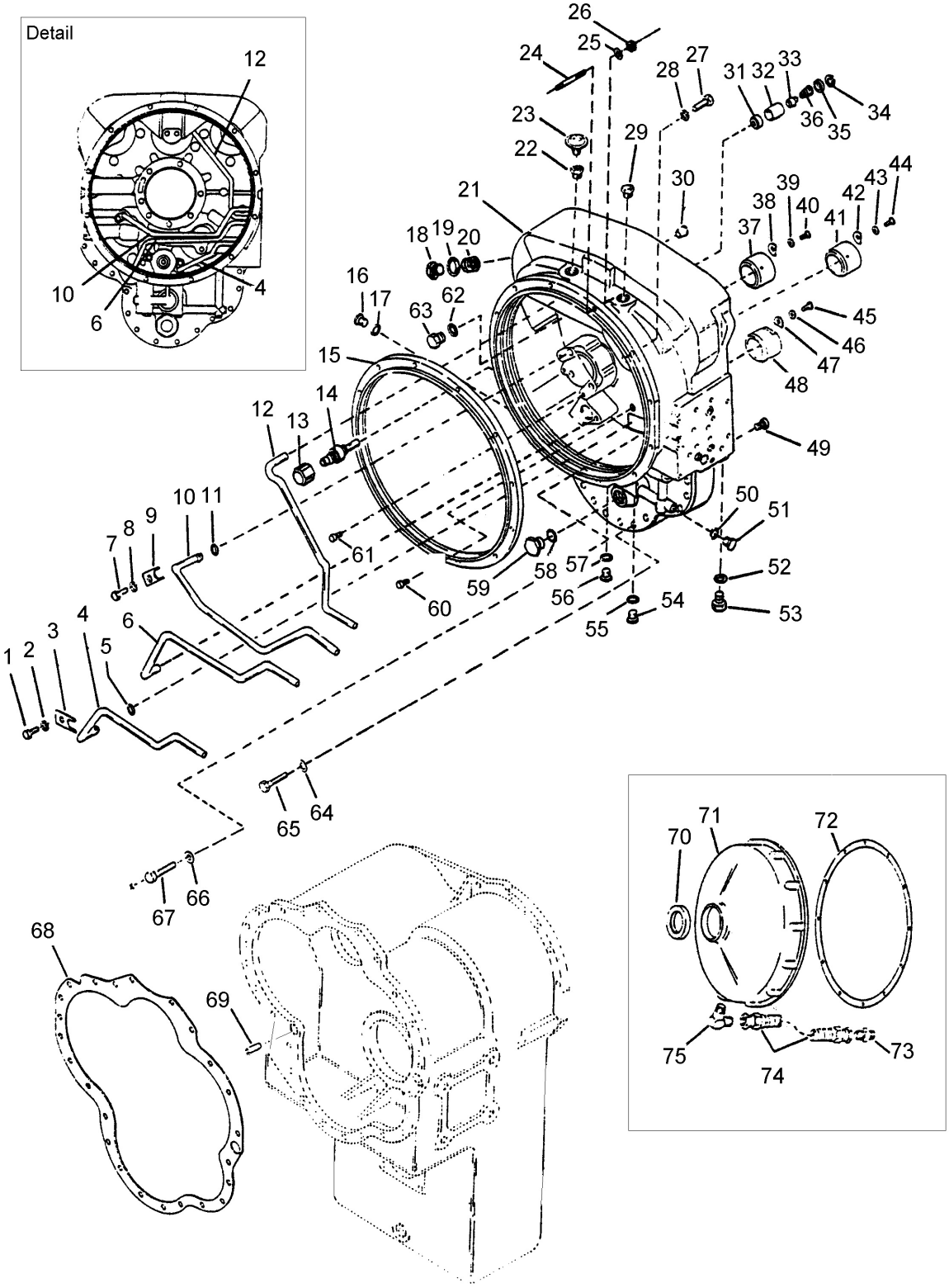

Item	Part No.	Name	Qty	L
1	-	Screw	2	
2	-	Spring washer	2	
3	-	Tube clip	2	
3	-	Tube	1	
4	4700199837	Tube	1	
5	4700199838	O-ring	1	
6	4700199839	Tube	1	
7		Screw	1	
8		Spring washer	1	
9		Tube clip	1	
10	4700199841	Tube	1	
11	4700199838	O-ring	1	
12	4700199842	Tube	1	
16	4700199843	Port plug	2	
17	4700199844	O-ring	2	
18	4700199840	Plug	1	
19	4700199846	O-ring	1	
20	4700199847	Adjusting bushing	1	
20	4700199848	Adjusting bushing shim	1	
21	4700199849	Converter housing	1	
22	4700199850	Reducing bushing	1	
23	4700240667	Breather	1	
29	4700199851	Fill plug	1	
30		Sleeve	2	
37	4700199852	Converter housing sleeve	1	
38	-	Sleeve lock	1	
39		Spring washer	1	
40		Screw	1	
41	-	Piston guides	1	
42		Sleeve lock	1	
43		Spring washer	1	
44		Screw	1	
45		Screw	1	
46		Spring washer	1	
47		Sleeve lock	1	
48	4700199854	Converter housing sleeve	1	
50	4700199844	O-ring	1	

Item	Part No.	Name	Qty	L
51	4700199843	Port plug	1	
52	4700199844	O-ring	1	
53	4700199843	Port plug	1	
54	4700199843	Port plug	1	
55	4700199844	O-ring	1	
56	4700199845	Plug	1	
57	4700199846	O-ring	1	
58	4700193666	Gasket	1	
59		Bearing	1	
60	-	Snap Ring	1	
61	-	Snap Ring	1	
64	4700199885	Spring washer	14	
65	4700199949	Seal ring	14	
66	4700199885	Spring washer	9	
67	-	Disc spring	9	
68	4700199952	Snap ring	1	
69		Clutch disc backing plate	2	

4812101120 Transmission case & torque converter 3600 Series - 4 speed Clutch shaft assy group

This page intentionally left blank

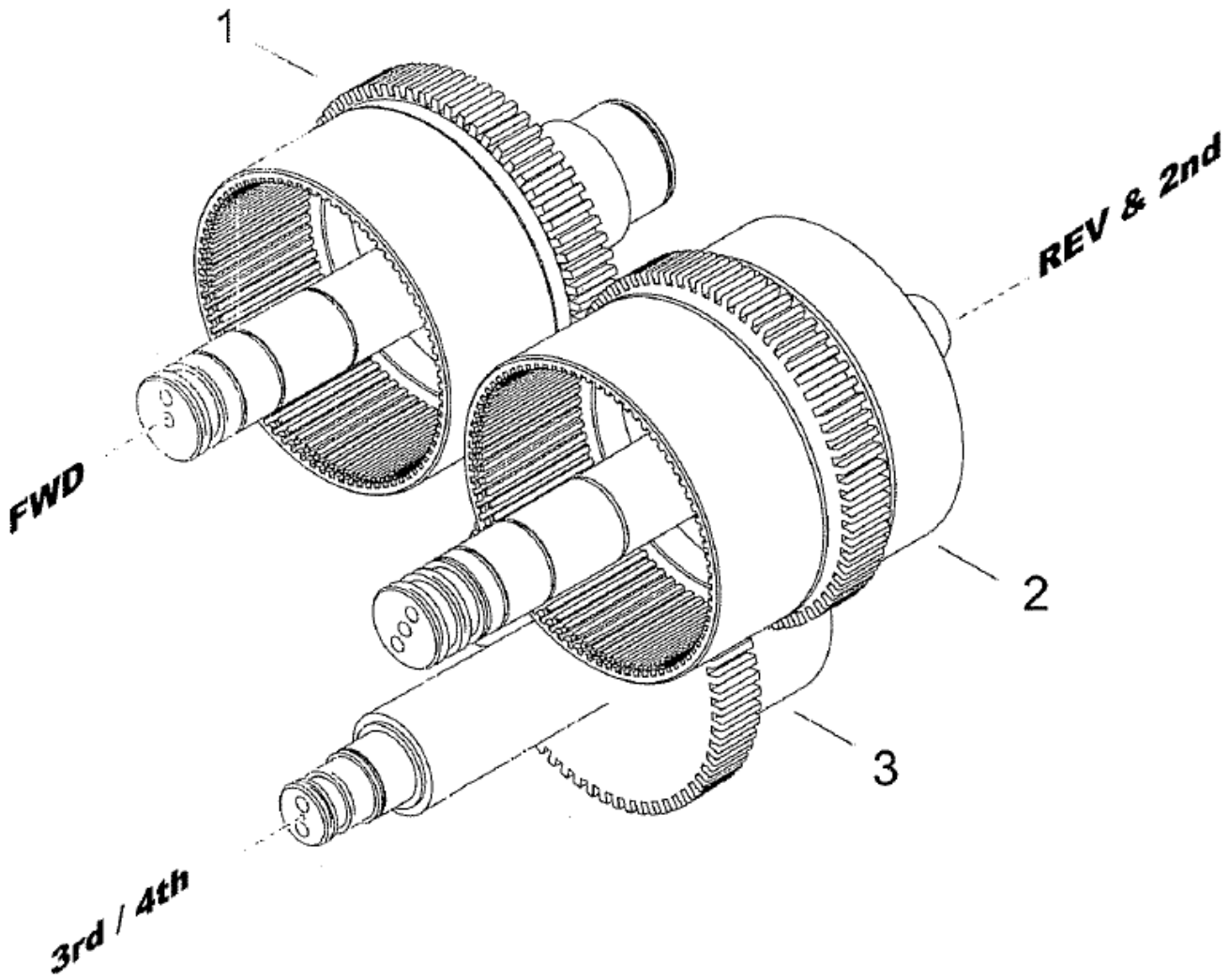
1
REV & 2nd
FWD
2
3
3rd / 4th

Item	Part No.	Name	Qty	L
1	4812317388	Shaft drum fwd	1	
2	4812317389	Shaft drum 2nd & rev	1	
3	4812317390	Shaft drum 3rd & 4th	1	

4812100915 Steering system 4812100915 Steering system

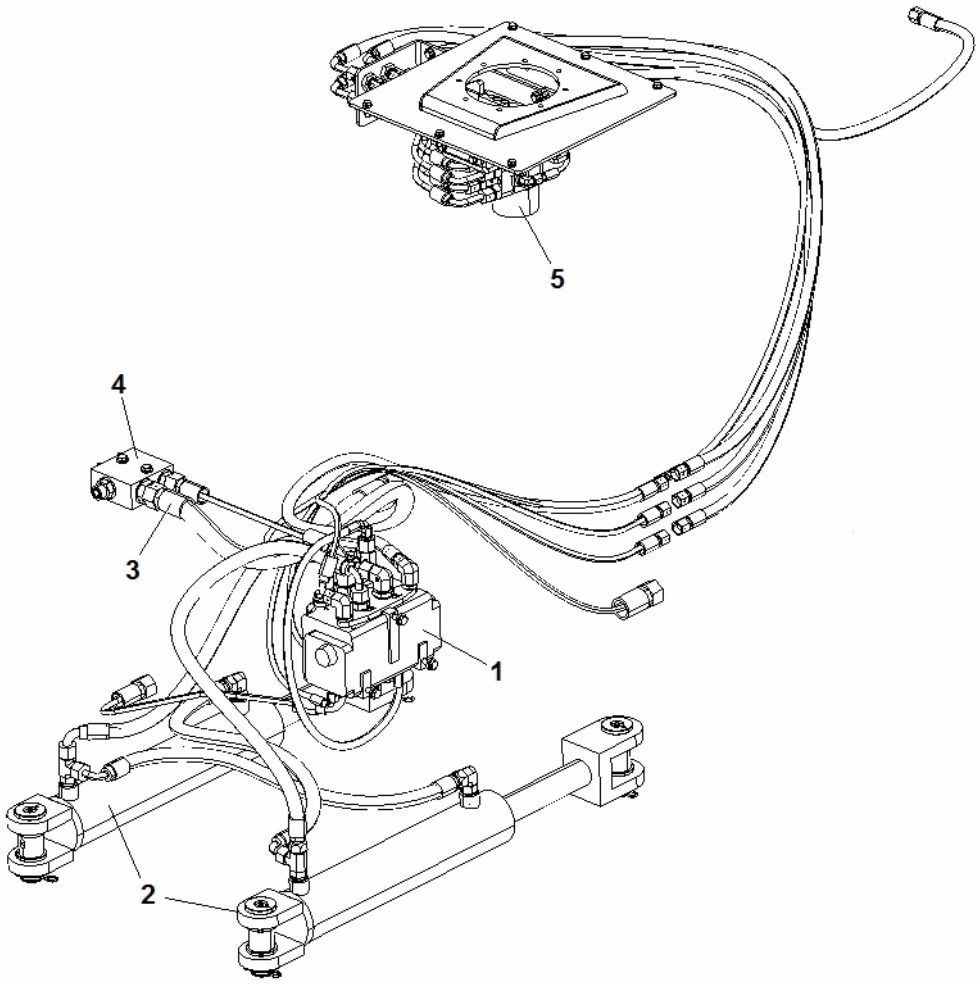

Item	Part No.	Name	Qty	L
1	4812100913	Flow Multiplier Module	1	
2	4812100916	Steering Cylinders Assy	1	
3	4812100919	Hose kit	1	
3	-	Hose kit	1	
3	-	Hose kit	1	
3	-	Hose kit	1	
3	-	Hose kit	1	
4	4812100921	Manifold Module	1	
5	4812100575	Steering Valve Assy	1	

4812100915 Steering system 4812100921 Manifold Module

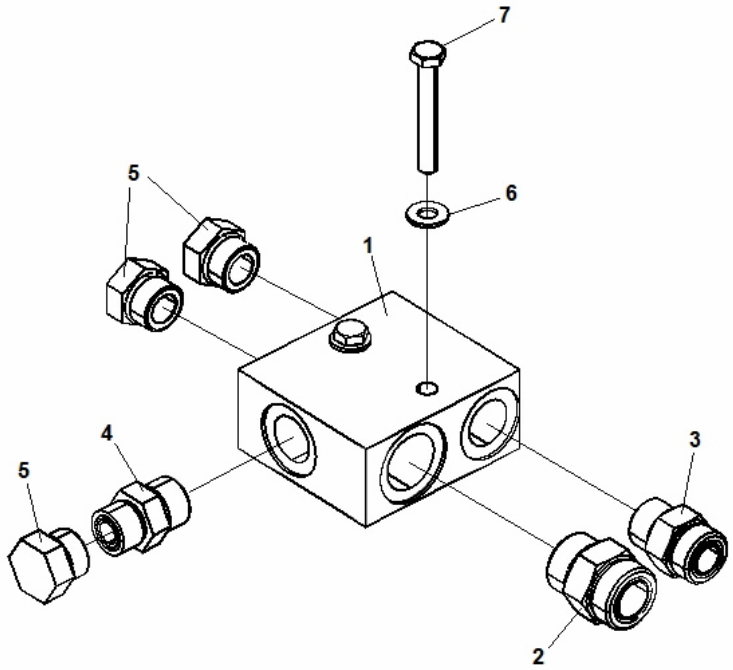

Item	Part No.	Name	Qty	L
1	4700345243	Connection block	1	
2	4700792339	Adapter	1	
3	4700791823	Adapter	1	
4	4700904578	Straight connector	1	
5	4700232222	Plug threaded	3	
6	4700904230	Washer	2	
7	4700500149	Screw	2	

4812100915 Steering system Hose kit

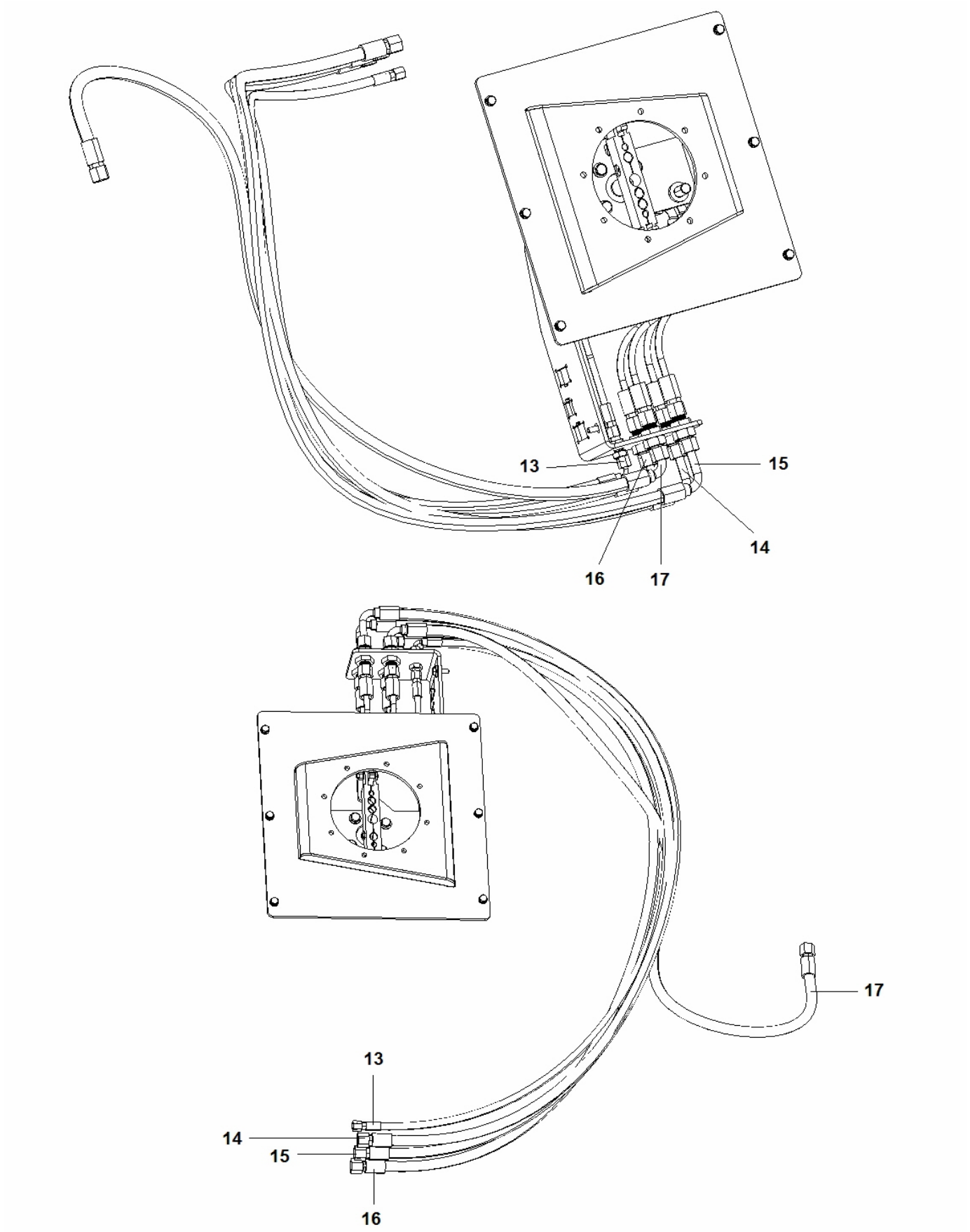

Item	Part No.	Name	Qty	L
13	4700484006	Hydraulic hose	1	
14	4812101162	Hydraulic hose	1	
15	4812101161	Hydraulic hose	1	
16	4812101160	Hydraulic hose	1	
17	4812101187	Hydraulic hose	1	

4812100915 Steering system Hose kit

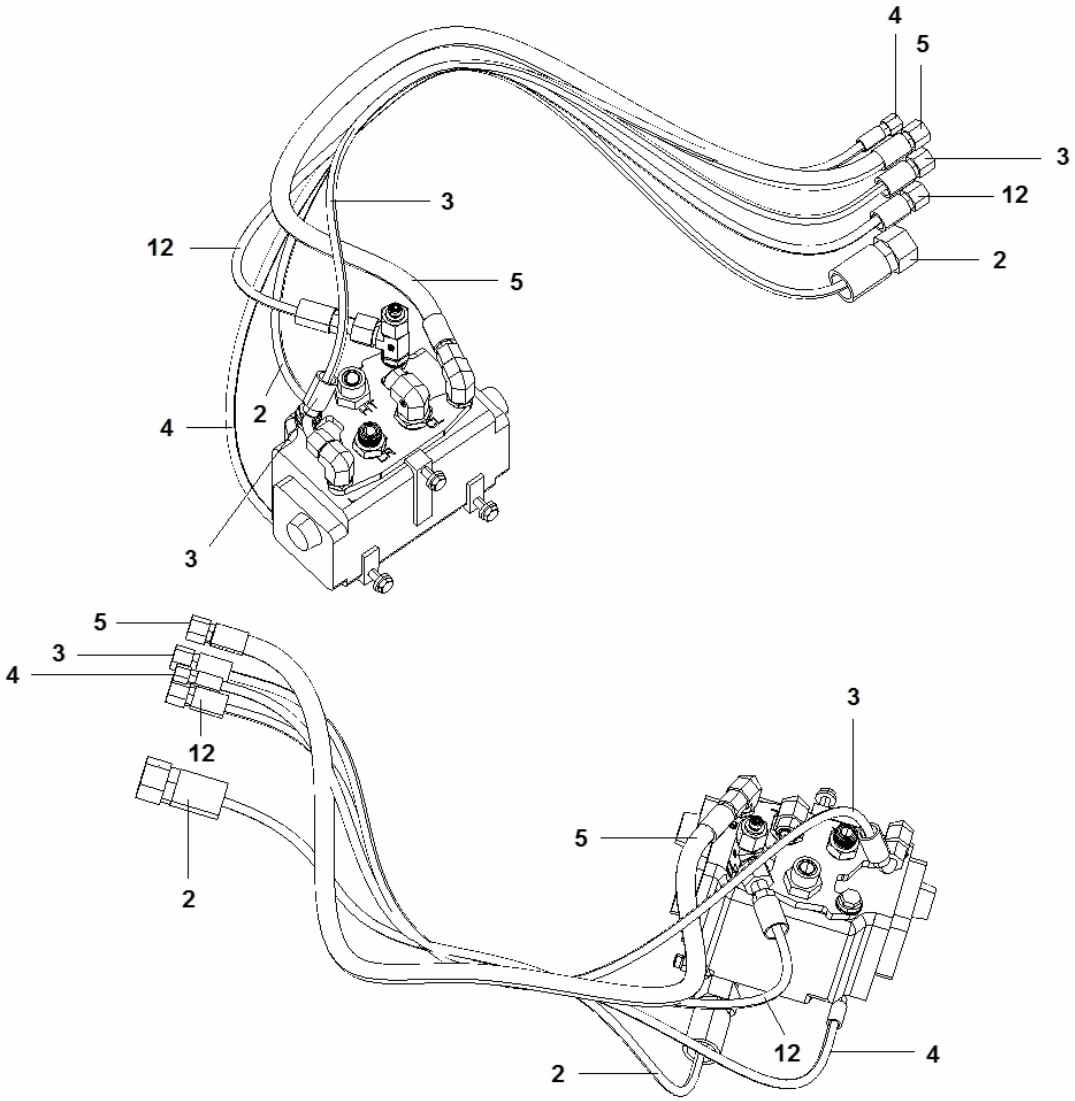

Item	Part No.	Name	Qty	L
2	4812101141	Hydraulic hose	1	
3	4812101140	Hydraulic hose	1	
4	4700484231	Hydraulic hose	1	
5	4812101139	Hydraulic hose	1	
12	4812101137	Hydraulic hose	1	

4812100915 Steering system Hose kit

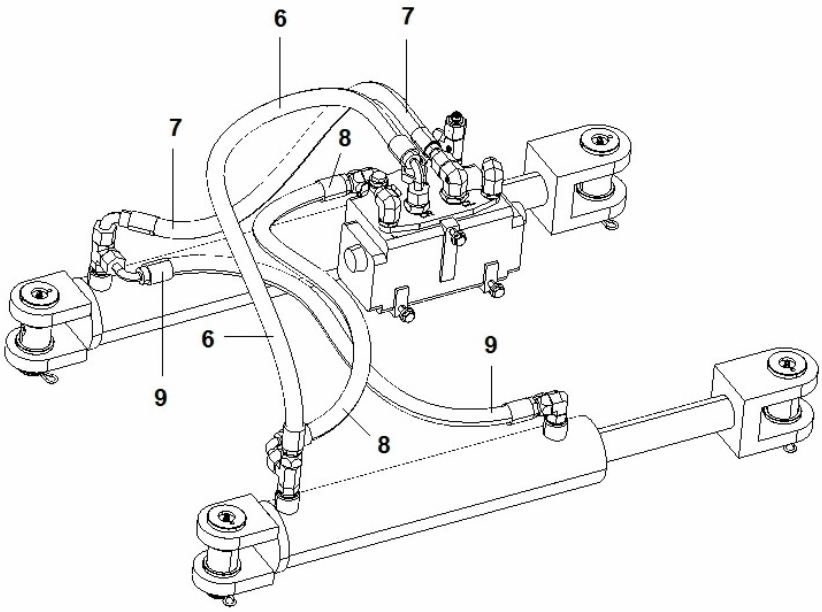

Item	Part No.	Name	Qty	L
6	4812101138	Hydraulic hose	1	
7	4812101138	Hydraulic hose	1	
8	4812101138	Hydraulic hose	1	
9	4812101138	Hydraulic hose	1	

4812100915 Steering system Hose kit

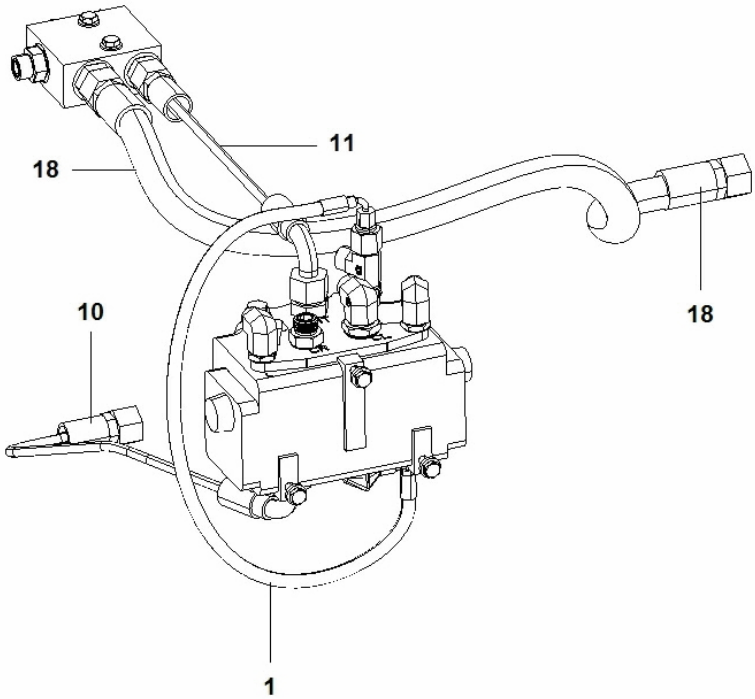

Item	Part No.	Name	Qty	L
1	4812101142	Hydraulic hose	1	
10	4812101143	Hydraulic hose	1	
11	4700483733	Hydraulic hose	1	
18	4812101167	Hydraulic hose	1	

4812100915 Steering system 4812100919 Hose kit

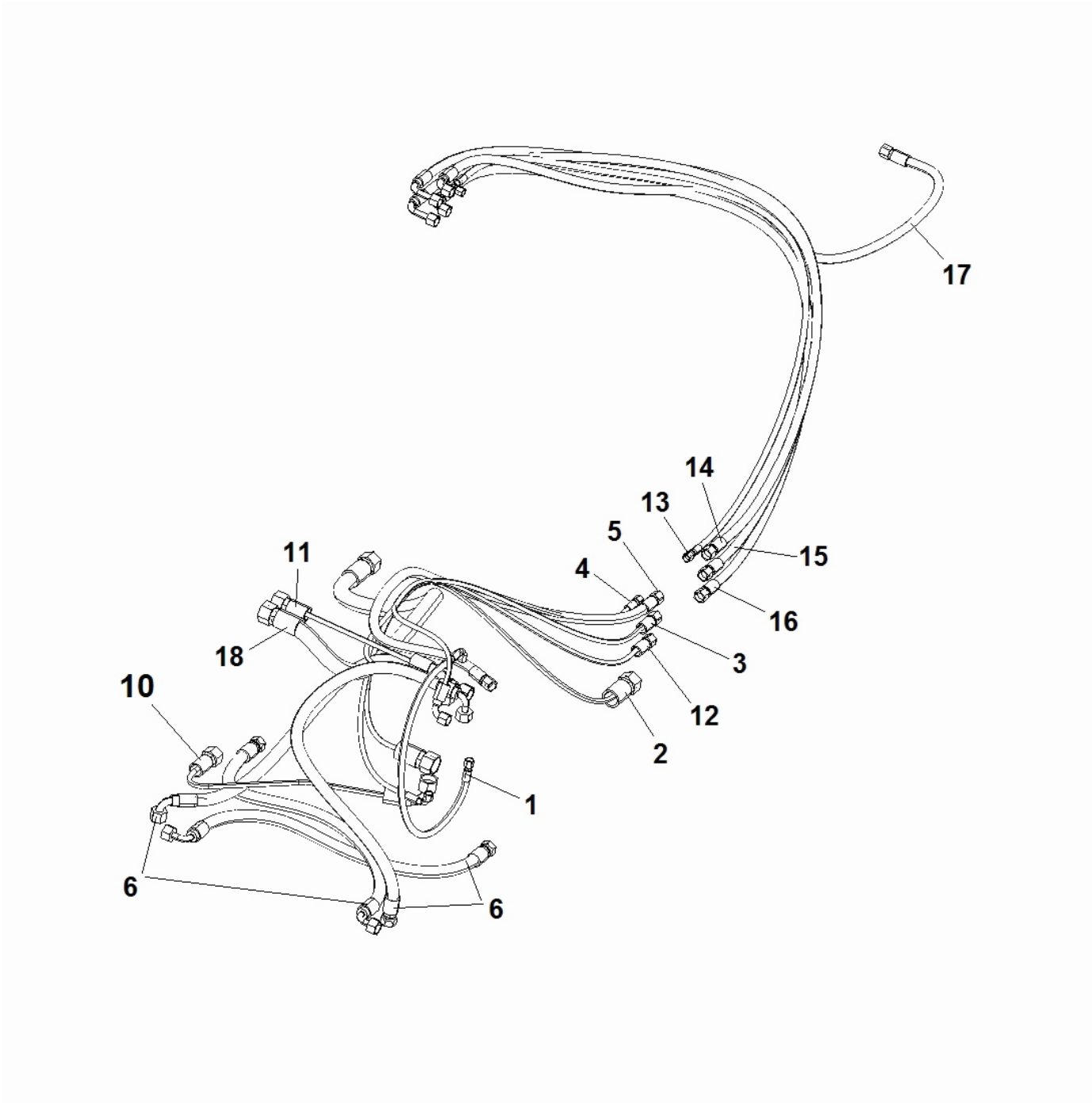

Item	Part No.	Name	Qty	L
1	4812101142	Hydraulic hose	1	
2	4812101141	Hydraulic hose	1	
3	4812101140	Hydraulic hose	1	
4	4700484231	Hydraulic hose	1	
5	4812101139	Hydraulic hose	1	
6	4812101138	Hydraulic hose	4	
10	4812101143	Hydraulic hose	1	
11	4700483733	Hydraulic hose	1	
12	4812101137	Hydraulic hose	1	
13	4700484006	Hydraulic hose	1	
14	4812101162	Hydraulic hose	1	
15	4812101161	Hydraulic hose	1	
16	4812101160	Hydraulic hose	1	
17	4812101187	Hydraulic hose	1	
18	4812101167	Hydraulic hose	1	

4812100915 Steering system 4812100916 Steering Cylinders Assy

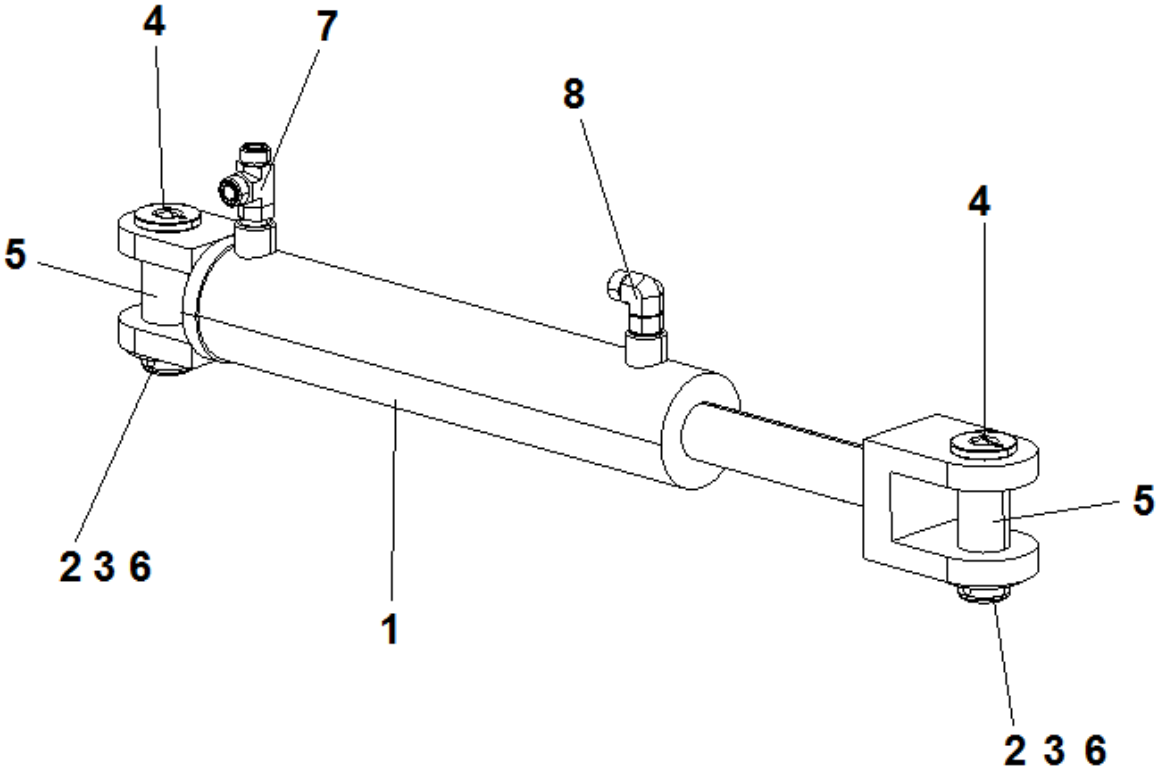

Item	Part No.	Name	Qty	L
1	4700199137	Hydraulic cylinder	1	
2	4700249946	Spacer	6	
3	4700248747	Washer	2	
4	4700310037	Grease nipple	2	
5	4700248732	Pin	2	
6	4700630029	Split pin	2	
7	4700791834	Adapter ORFS	1	
8	4700791843	Elbow 90, O-ring with swivel	1	
9	4700199138	Seal kit	1	

4812100915 Steering system 4812100913 Flow Multiplier Module

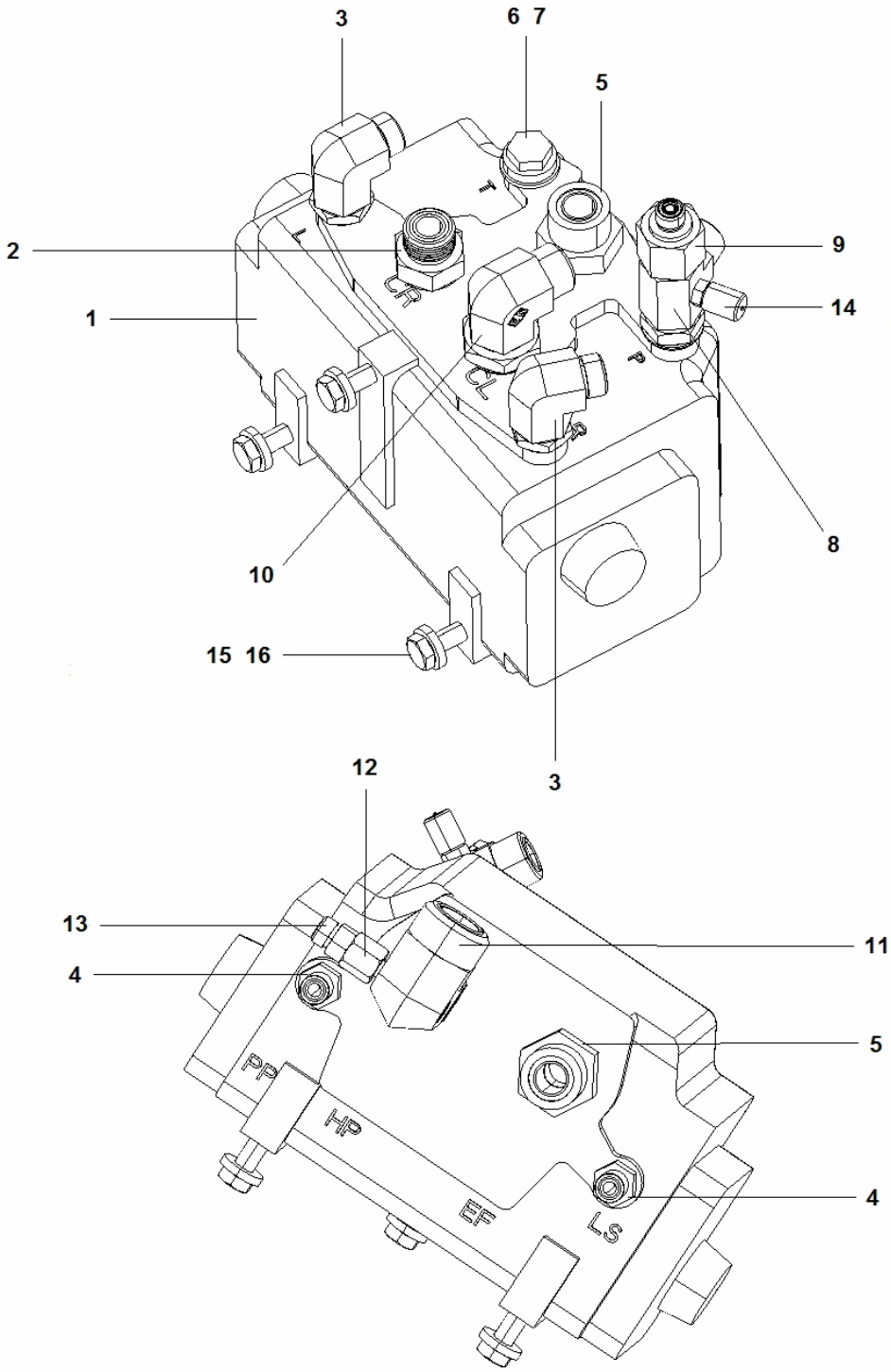

Item	Part No.	Name	Qty	L
1	4812100410	Flow Amplifier	1	
2	0570702503	Elbow 90	1	
3	4700791699	Elbow 90	2	
4	4700791541	Adapter	2	
5	4700904728	Adapter	2	
6	4700162006	Seal ring	1	
7	4700232056	Steel plug threaded	1	
8	4812101749	Connector T	1	
9	4812100736	Reducer	1	
10	4700792068	Elbow 90°	1	
11	4812101287	Elbow 90	1	
12	4812101252	Female straight adapter	1	
13	4700791744	Adapter	1	
14	4700910161	Measuring nipple	1	
15	4700904557	Washer, 10.5x22x4 mm 300 HV	3	
16	4700500030	Hexagon head screw	3	

4812100575 Steering Valve Assy 4812100575 Steering Valve Assy

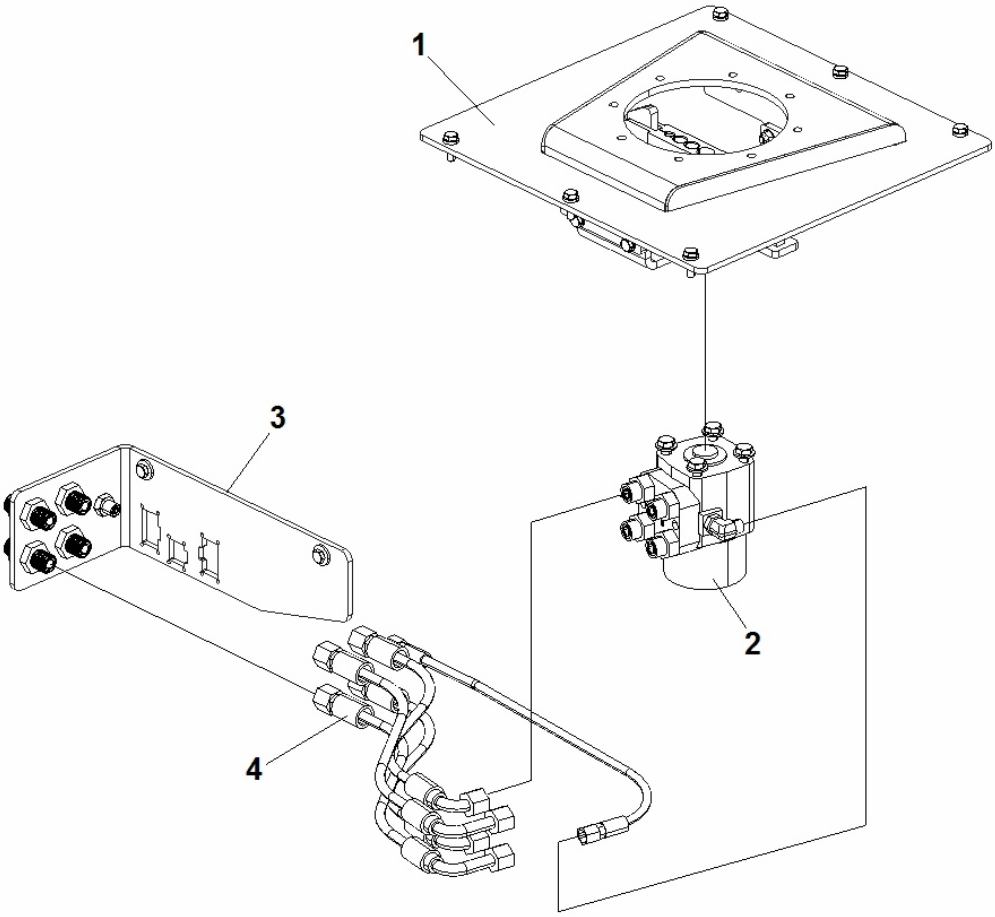

Item	Part No.	Name	Qty	L
1	4812101045	Seat Bracket Mounting Assy	1	
2	4812100569	Steering valve	1	
3	4812100568	Hose bracket module	1	
4	4812100972	Hose kit	1	

4812100575 Steering Valve Assy 4812100972 Hose kit

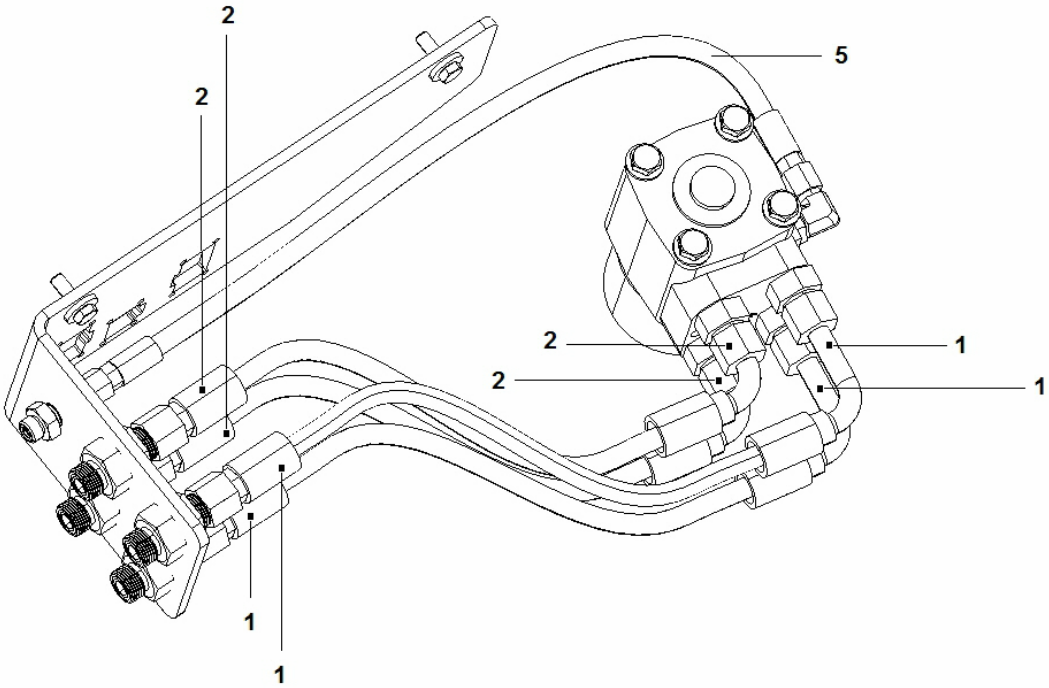

Item	Part No.	Name	Qty	L
1	4812101156	Hydraulic hose	2	
2	4812101158	Hydraulic hose	2	
5	4811000363	Hydraulic hose	1	

4812100575 Steering Valve Assy 4812100568 Hose bracket module

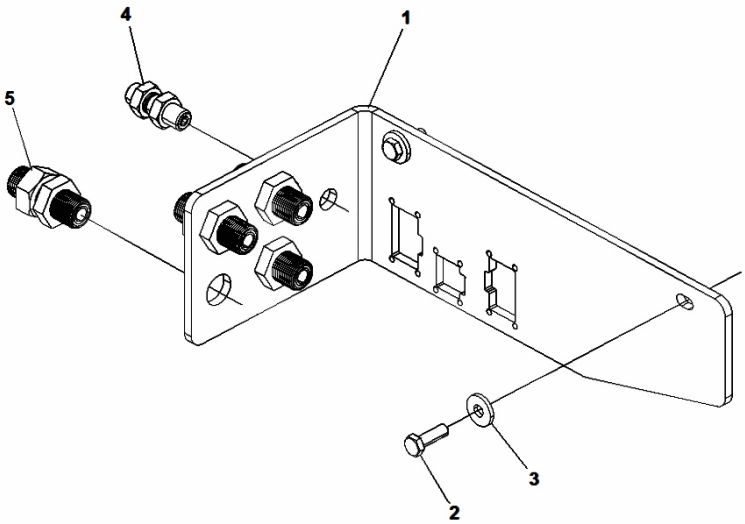

Item	Part No.	Name	Qty	L
1	4812100567	Sheet Metal Support	1	
2	4700500021	Hex. screw	2	
3	4700904640	Washer, 8.4x 2x3 mm 300 HV	2	
4	4700792170	Adapter	1	
5	4700792344	Bulkhead union	4	

4812100575 Steering Valve Assy 4812100569 Steering valve

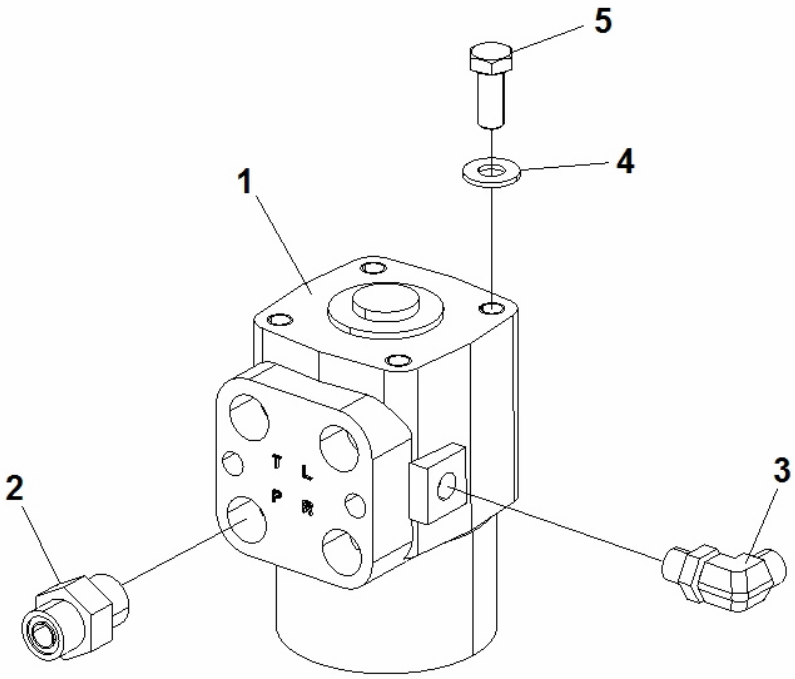

Item	Part No.	Name	Qty	L
1	4812100409	Steering valve	1	
2	4700791407	Straight o-ring connector	4	
3	4700791397	Elbow 90, O-ring	1	
4	4700904230	Washer	4	
5	4700500028	Screw, M10x25 mm 8.8 A3K	4	

4812100575 Steering Valve Assy 4812101045 Seat Bracket Mounting Assy

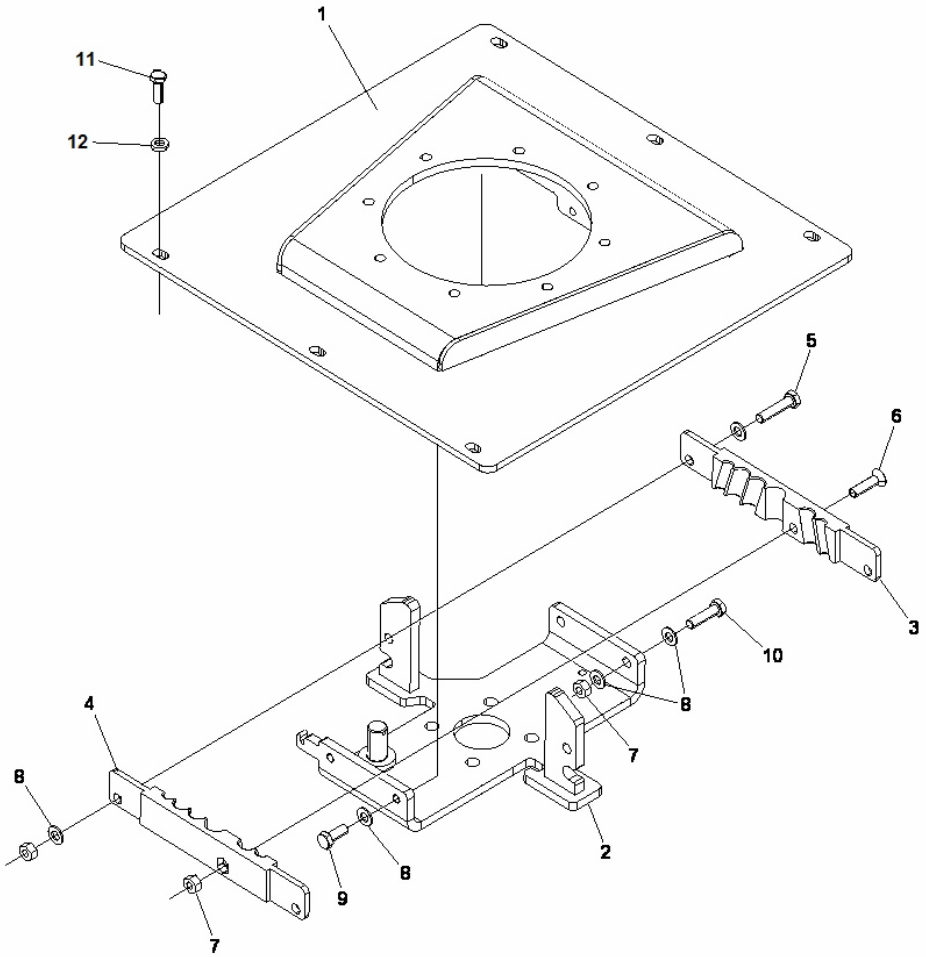

Item	Part No.	Name	Qty	L
1	4812100506	Cabin Floor Assy	1	
2	4700391478	Steering valve bracket	1	
3	4700389163	Clamp	1	
4	4700389164	Clamp	1	
5	4700500047	Hexagon head screw	2	
6	4700902520	Screw	1	
7	4700570005	Hex. nut	5	
8	4700904229	Washer, 8.4x16x1.5 mm 300 HV	10	
9	4700500053	Hex. screw	2	
10	4700500022	Screw	2	
11	4700500021	Hex. screw	6	
12	4700904556	Steel plain washer	6	

4812100980 Electrical system 4812100980 Electrical system

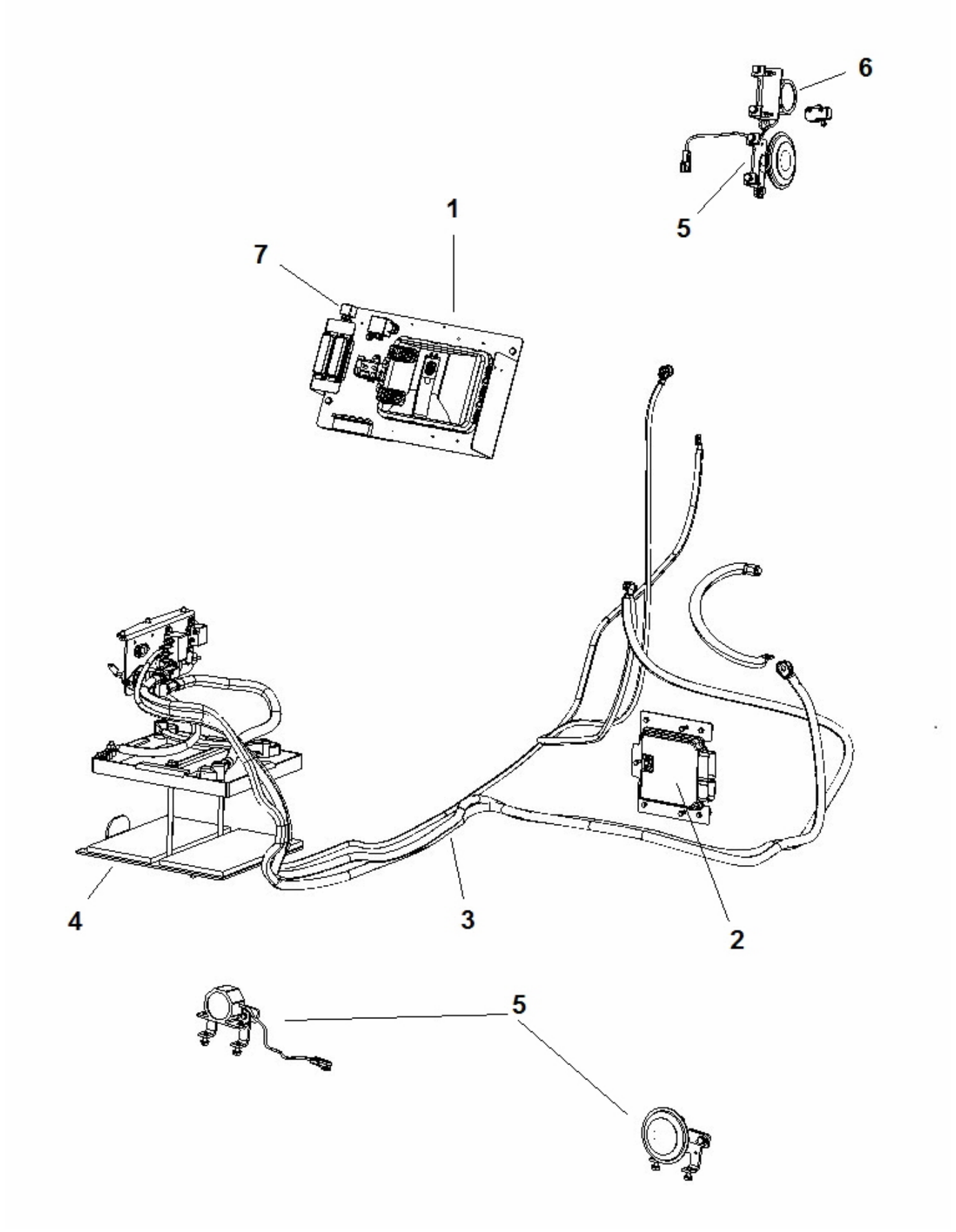

Item	Part No.	Name	Qty	L
1		Battery disconnector module	1	
2	4812101061	Transmission APCU Module	1	
3	4812100863	Battery Cable Kit	1	
4	4812101197	Battery module	1	
5	4812101215	Alert Sound Kit	1	
6	4812101855	Sensor module	1	
7		Electrical box module	1	
8	4700792422	Relay 24V 20A	1	

4700391634 Battery disconnector module 4700391634 Battery disconnector module

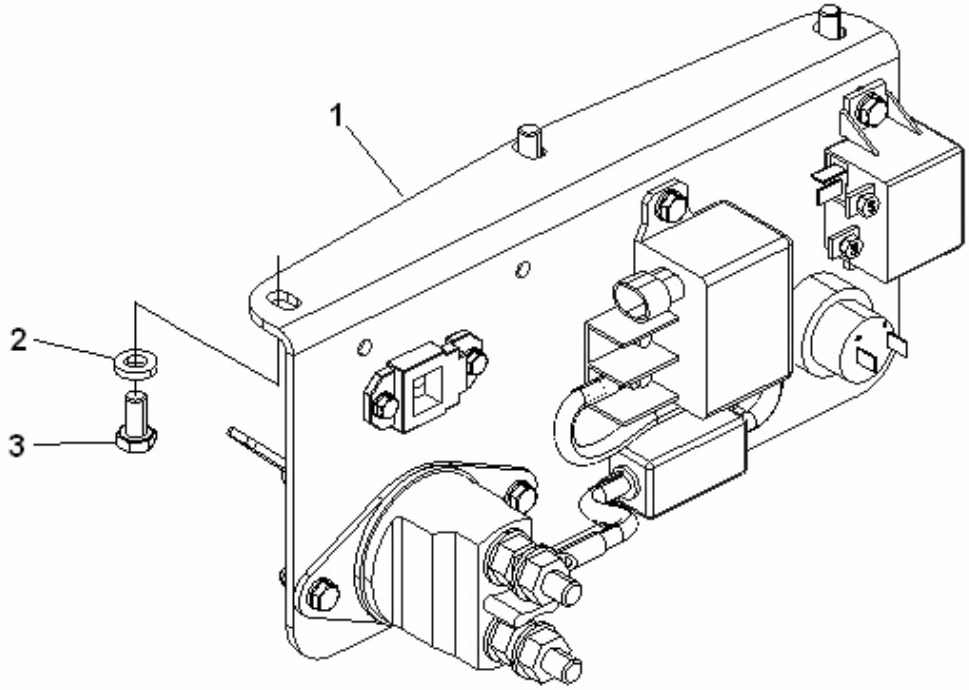

Item	Part No.	Name	Qty	L
1		Battery disconnector	1	
2	4700904556	Steel plain washer	3	
3	4700500019	Hex. screw	3	

4700391635 Battery disconnector 4700391635 Battery disconnector

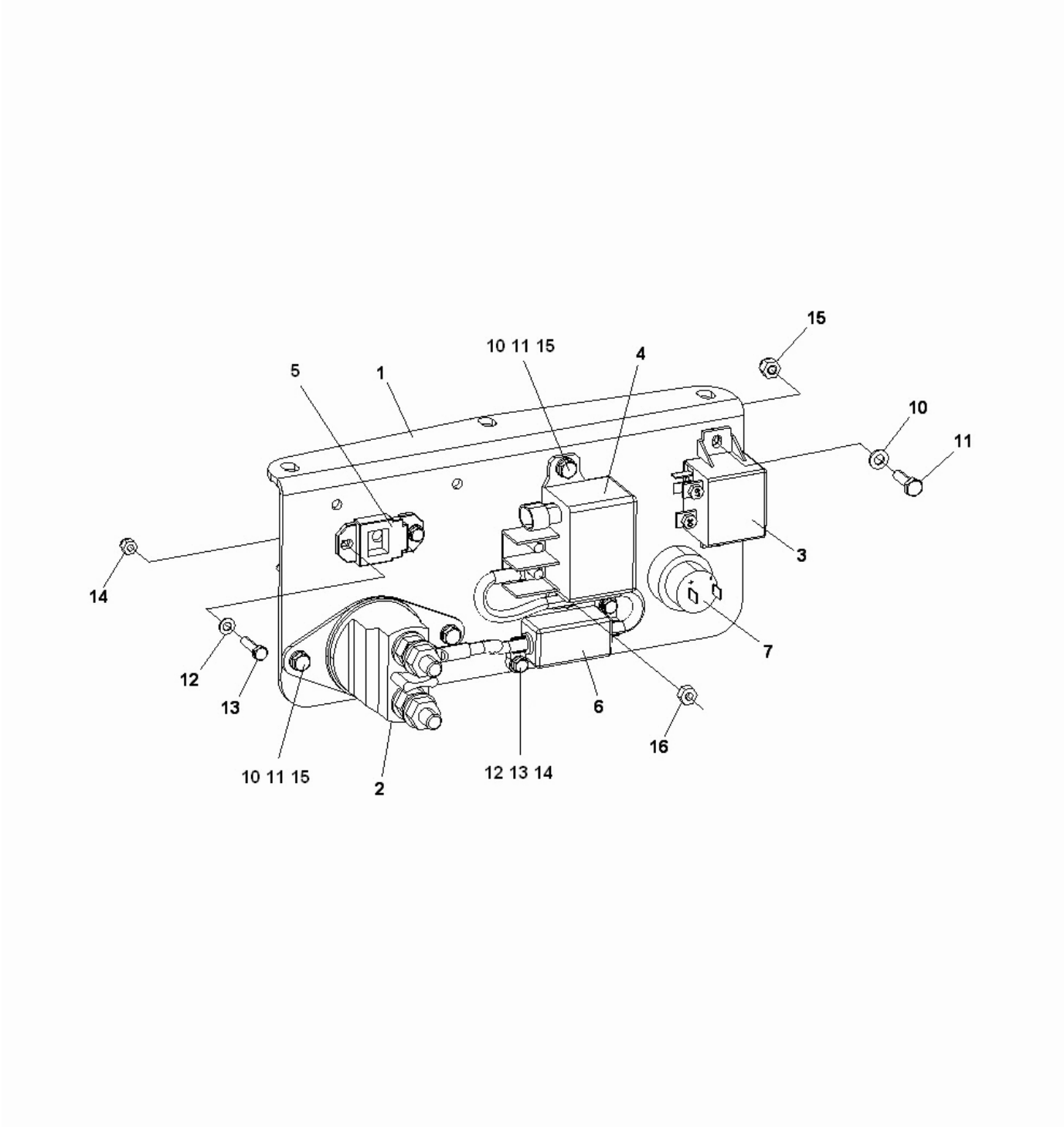

Item	Part No.	Name	Qty	L
1	4700391269	Holder	1	
2	4700903640	Battery switch	1	
.2	4700903641	Key	1	
3	4700792309	Relay	1	
4	4700792310	Relay	1	
5	4700904036	Bracket	1	
6	4700391585	Cable harness	1	
.6	4700791479	Fuse, Orange 125A	1	
7	4700395816	Plug socket 24V	1	
10	4700904228	Steel plain washer	6	
11	4700500040	Screw	6	
12	4700904281	Washer, 5,3x10x1 300HV	4	
13	4700500060	Screw M5-0,8x20 8.8	4	
14	4700586001	Lock nut	4	
15	4700586002	Lock nut M6 -8	6	
16	4700570004	Hex. nut	1	

4812101061 Transmission APCU Module 4812101061 Transmission APCU Module

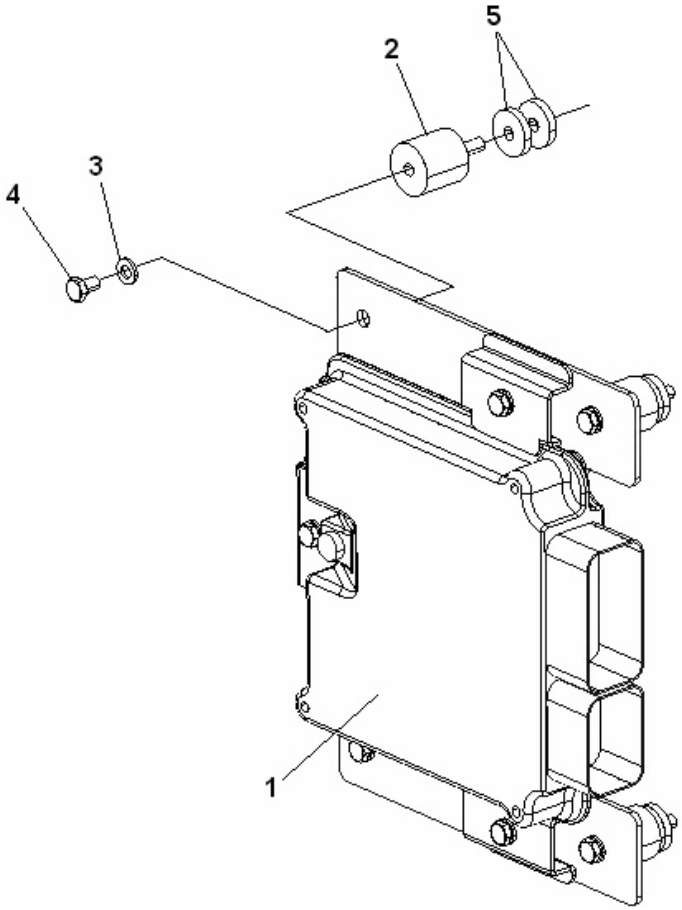

Item	Part No.	Name	Qty	L
1	4812101062	Transmission APCU Assy	1	
2	4700371774	Shock absorber	4	
3	4700904228	Steel plain washer	4	
4	4700500059	Hex. screw	4	
5	4700904735	Steel plain washer	8	

4812101062 Transmission APCU Assy 4812101062 Transmission APCU Assy

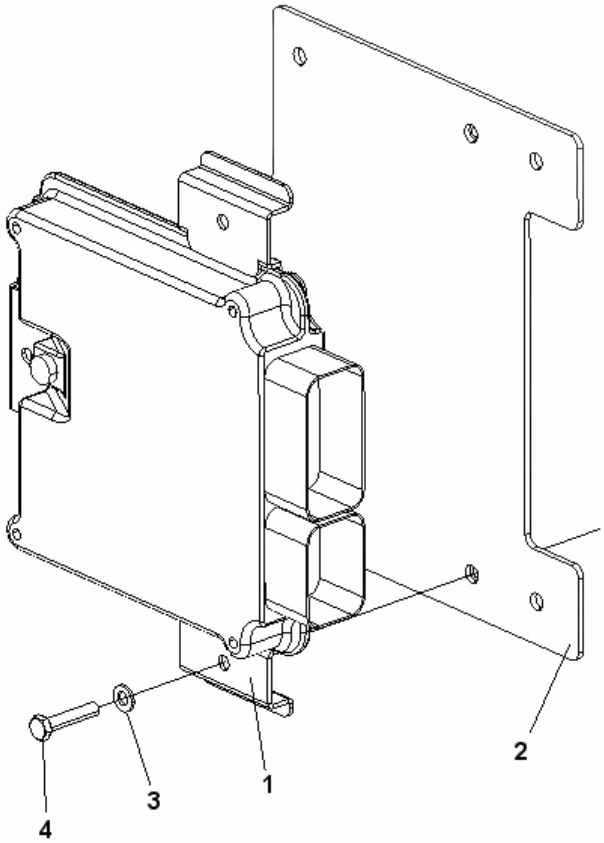

Item	Part No.	Name	Qty	L
1	4812100720	Electronic Control Module	1	
2	4812100647	Plate	1	
3	4700904228	Steel plain washer	3	
4	4700900485	Hexagon head screw	3	

4812100863 Battery Cable Kit 4812100863 Battery Cable Kit

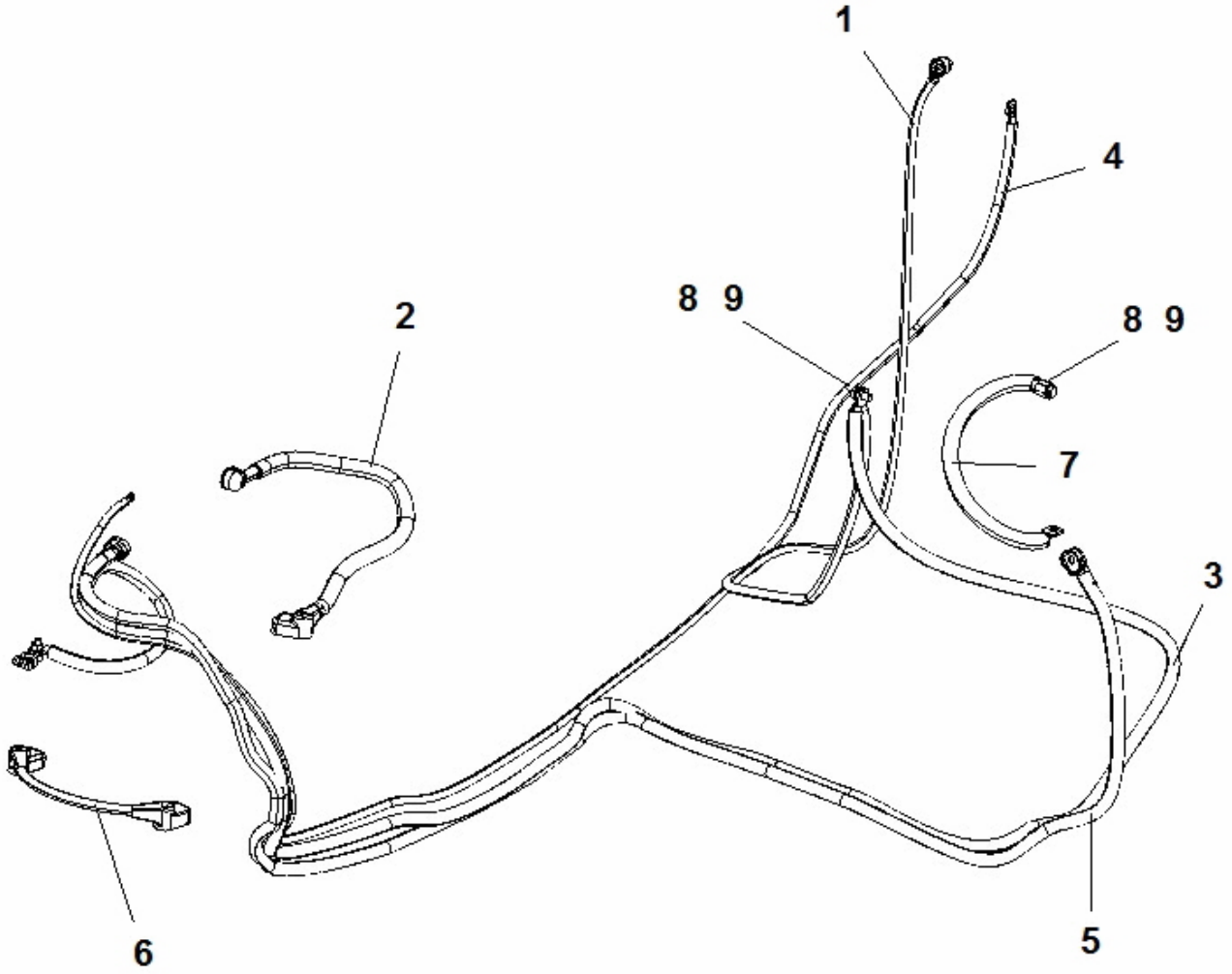

Item	Part No.	Name	Qty	L
1	4812100834	Battery cable	1	
2	4812100835	Battery cable	1	
3	4812100836	Battery cable	1	
4	4812100837	Connection cable	1	
5	4812100838	Connection cable	1	
6	4812100867	Battery union	1	
7	4812100868	Cable connection	1	
8	4700904638	Washer 12x22x2	2	
9	4700500051	Hex. screw	2	

4812101197 Battery module 4812101197 Battery module

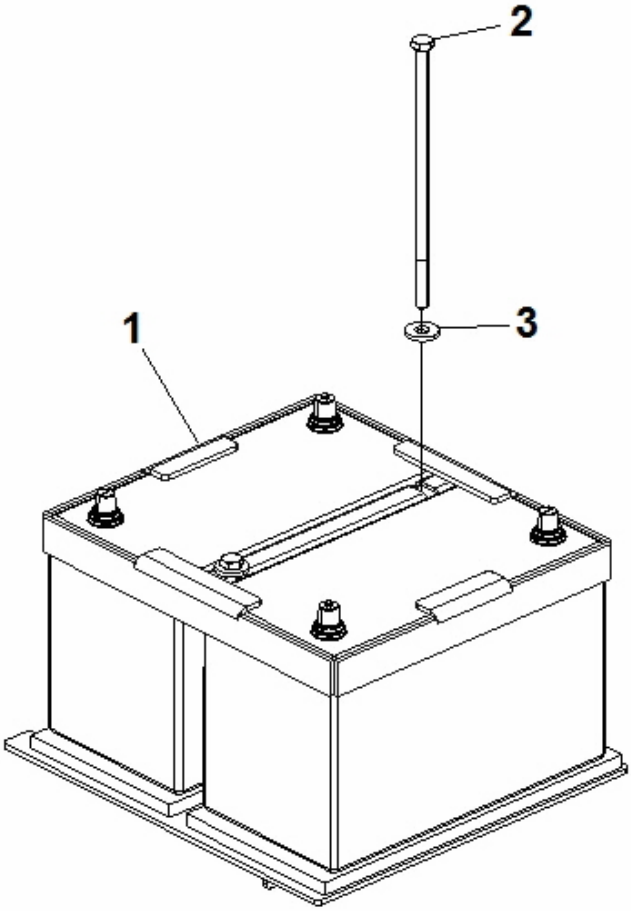

Item	Part No.	Name	Qty	L
1	4812101198	Battery Assy	1	
2	4812101196	Screw	2	
3	4700904213	Washer	2	

4812101198 Battery Assy 4812101198 Battery Assy

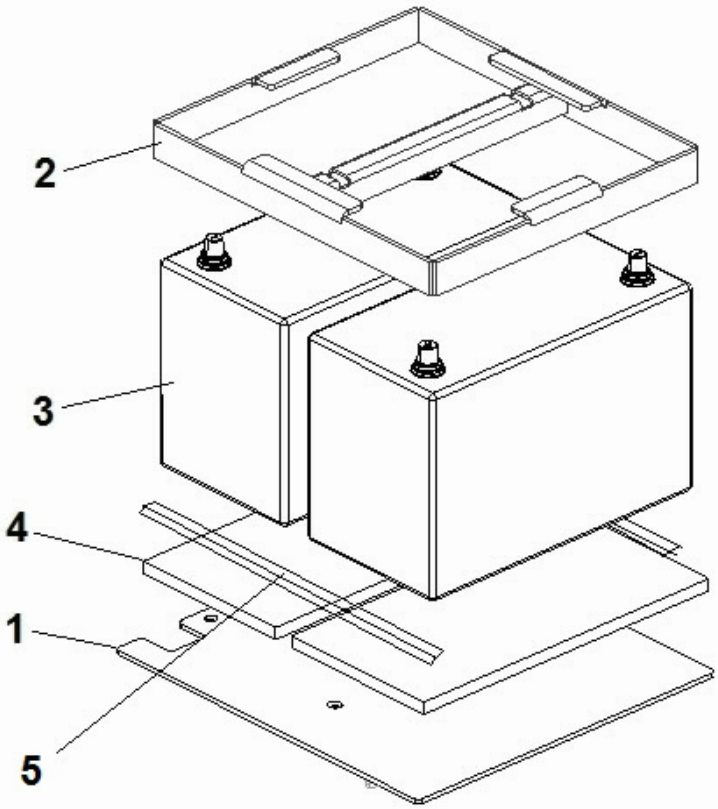

Item	Part No.	Name	Qty	L
1	4812100548	Battery bracket	1	
2	4812100553	Battery bracket	1	
3	4700470029	Battery	2	
4	4700193575	Shim	2	
5	4812100549	Slide rail	2	

4812101215 Alert Sound Kit 4812101215 Alert Sound Kit

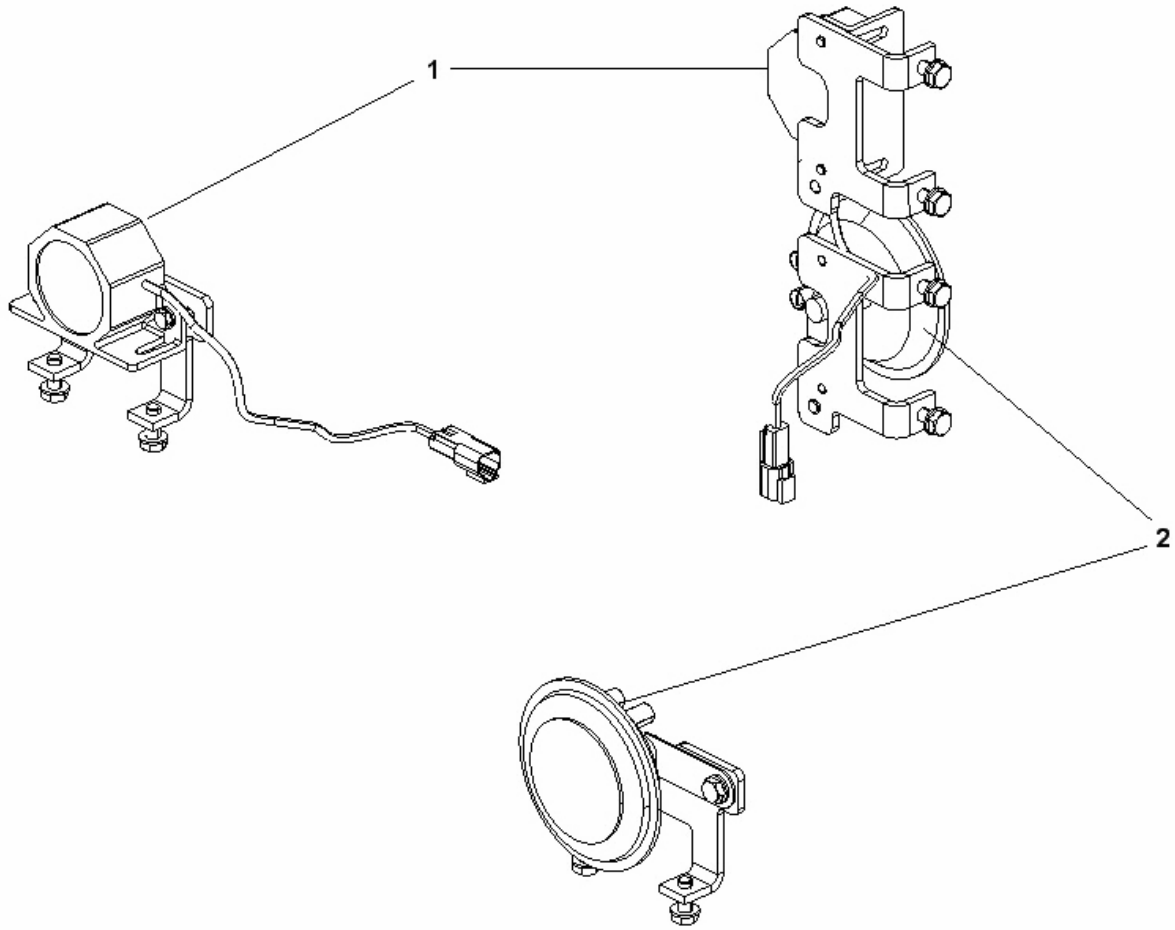

Item	Part No.	Name	Qty	L
1		Back up Alarm Module	2	
2		Horn module	2	

4700396834 Back up Alarm Module 4700396834 Back up Alarm Module

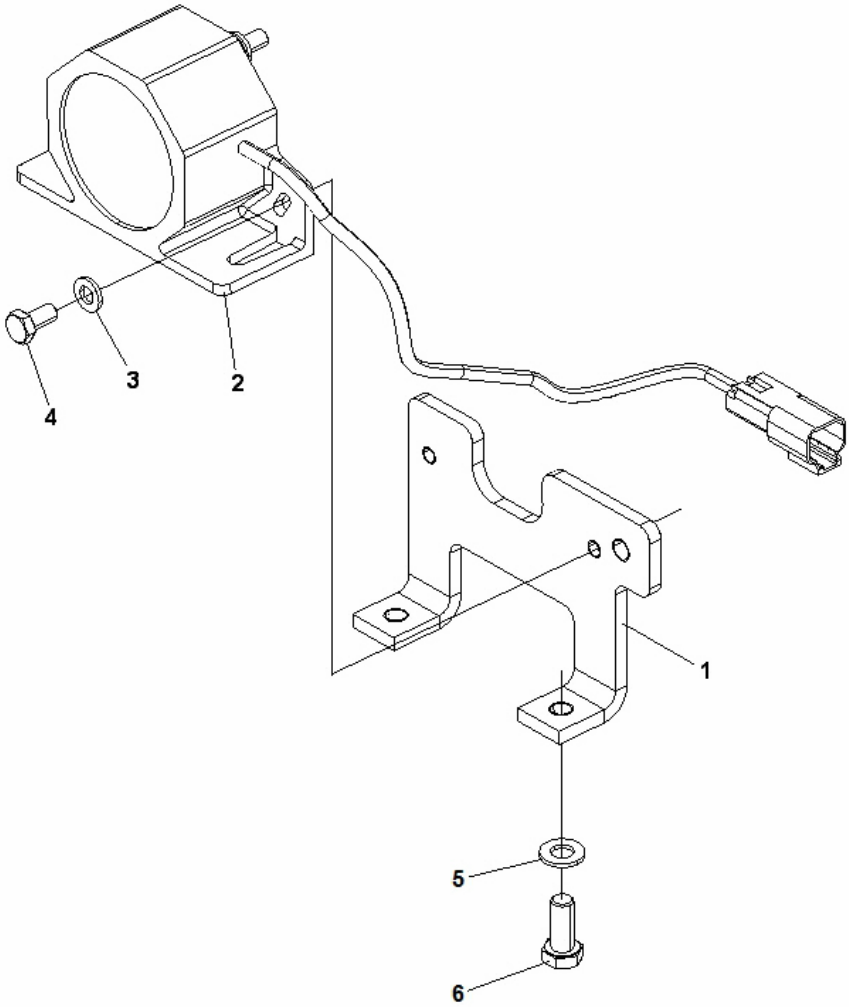

Item	Part No.	Name	Qty	L
1	4700396768	Bracket	1	
2	4700904910	Back-up alarm	1	
3	4700904228	Steel plain washer	2	
4	4700500012	Hex. screw	2	
5	4700904229	Washer, 8.4x16x1.5 mm 300 HV	2	
6	4700500053	Hex. screw	2	

4700396836 Horn module 4700396836 Horn module

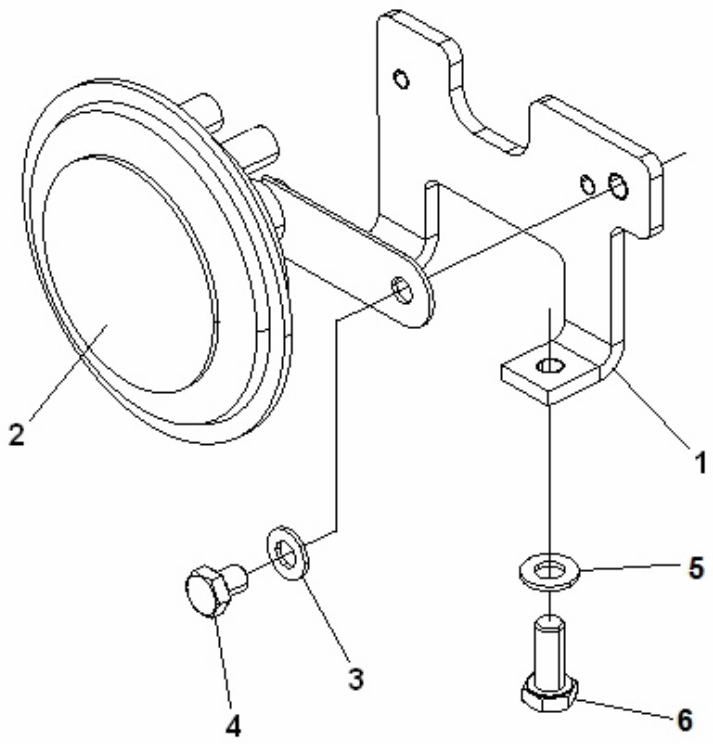

Item	Part No.	Name	Qty	L
1	4700396768	Bracket	1	
2	4700999014	Horn	1	
3	4700904229	Washer, 8.4x16x1.5 mm 300 HV	1	
4	4700500042	Hex. head screw M8	1	
5	4700904229	Washer, 8.4x16x1.5 mm 300 HV	2	
6	4700500053	Hex. screw	2	

4812101855 Sensor module 4812101855 Sensor module

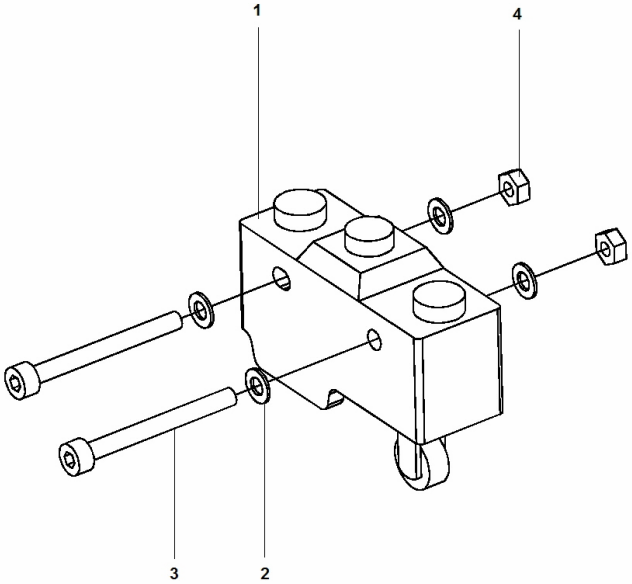

Item	Part No.	Name	Qty	L
1	4700930046	Micro switch	1	
2	4700904697	Washer 3,2x6x0,5	4	
3	4700903152	Screw	2	
4	4700570001	Nut	2	

4700391632 Electrical box module 4700391632 Electrical box module

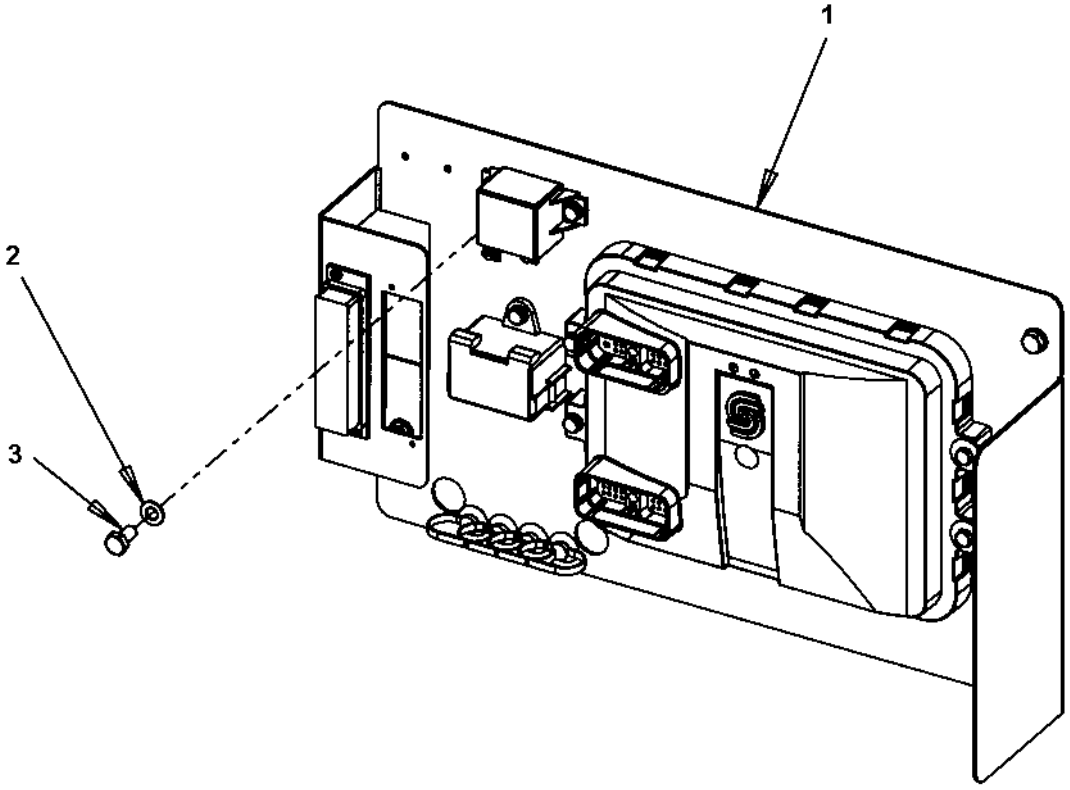

Item	Part No.	Name	Qty	L
1		Electrical box	1	
2	4700904229	Washer, 8.4x16x1.5 mm 300 HV	4	
3	4700500019	Hex. screw	4	

4700391633 Electrical box 4700391633 Electrical box

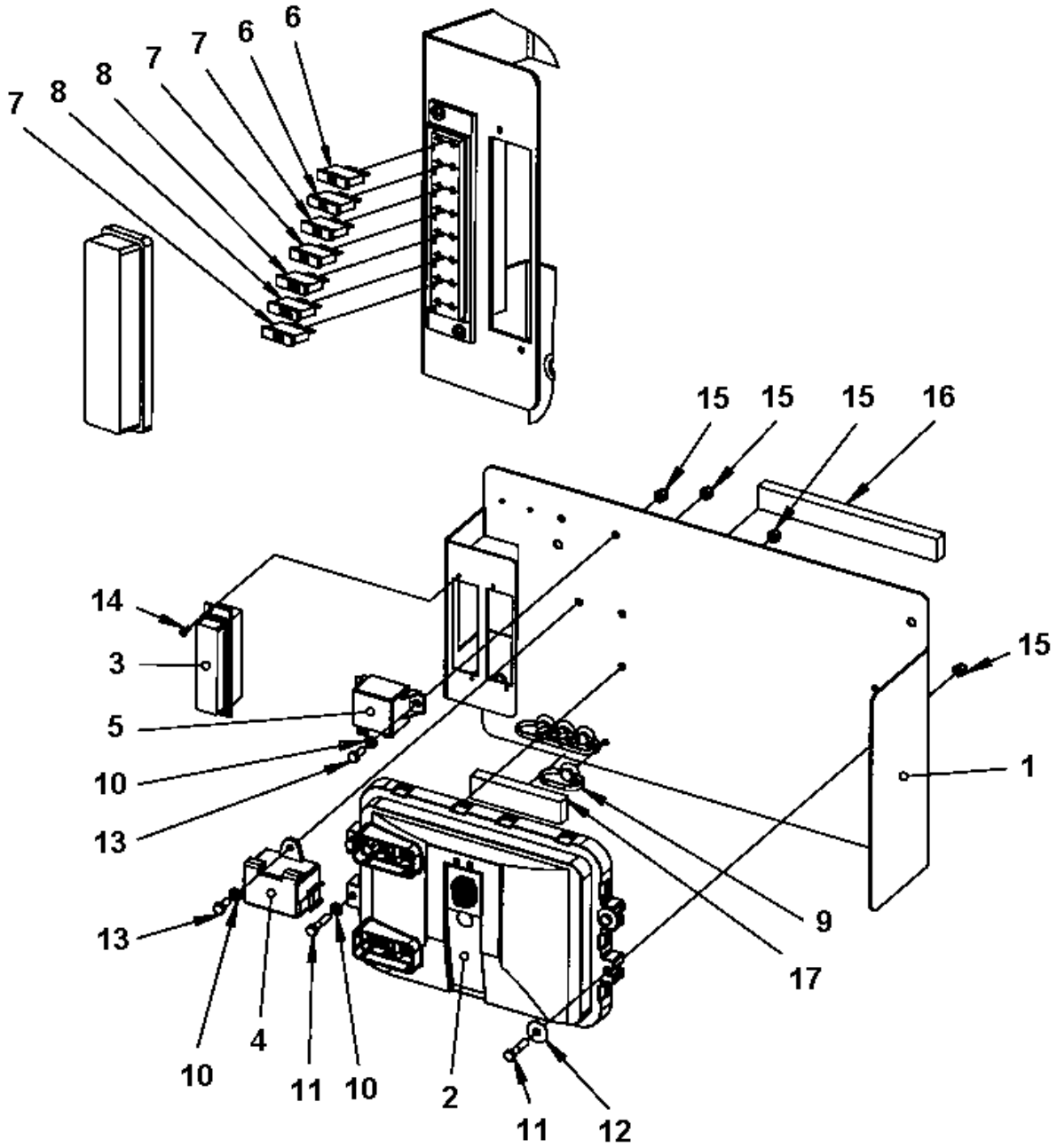

Item	Part No.	Name	Qty	L
1	4700391213	Mounting plate	1	
2	4700390860	Control unit	1	
3	4700791185	Fuse box	2	
4	4700791551	Junction block	1	
5	4700792309	Relay	1	
6	4700901225	Fuse 5A Tan	2	
7	4700901227	Fuse 10A Red	3	
8	4700903741	Fuse 20A Yellow	2	
9	4700792441	Cable tie with holder	4	
10	4700904228	Steel plain washer	5	
11	4700500015	Hex. screw	4	
12	4700928467	Washer	2	
13	4700500013	Hex. screw	3	
14	4700901767	Screw	2	
15	4700586002	Lock nut M6 -8	7	
16	4700791597	Rubber strip	1XL	A
17	4700791597	Rubber strip	1XL	A

Comments for Page: 4700391633 Electrical box

(L)OCAL REMARKS

A | en_US | L=0,175 m

4812100858 Wiring Harness Kit 4812100858 Wiring Harness Kit

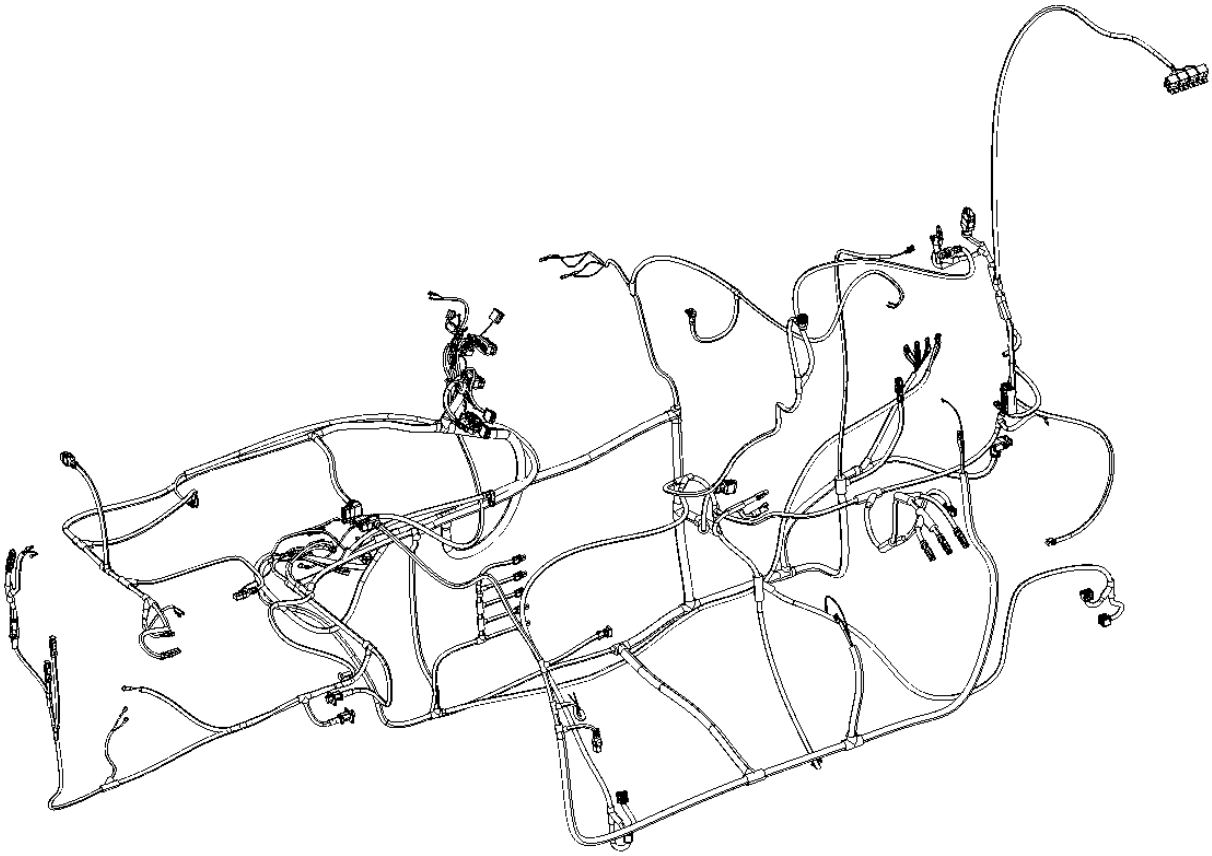

Item	Part No.	Name	Qty	L
1	4812100859	Wiring harness frame	1	
2	4812100860	Wiring harness power suplier	1	
3	4812100199	Wiring harness go home	1	
4	4700500046	Hex. head screw M12x030H	1	
5	4700570003	Hex. nut	1	
6	4700570005	Hex. nut	1	
7	4700792602	Cable tie with holder	30	
8	4700792771	Cable tie	10	
9	4812315729	Main power unit kit	1	
10	4812315902	Wiring harness kit	1	

4812100859 Wiring harness frame 4812100859 Wiring harness frame

1

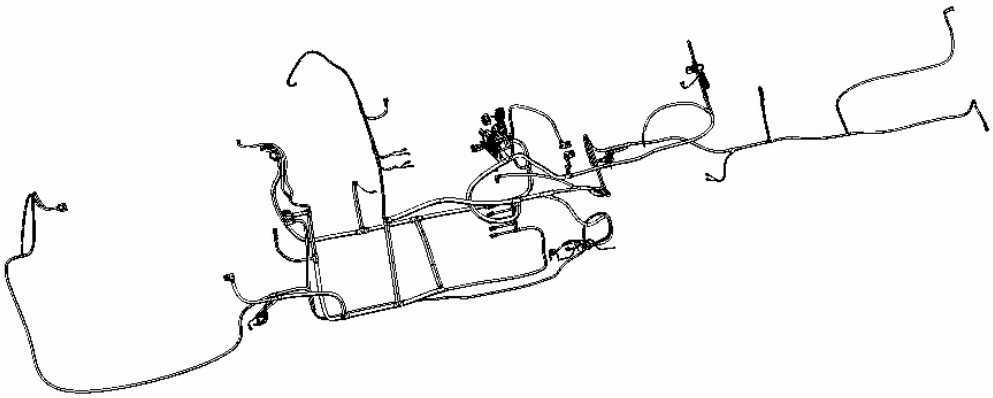

Item	Part No.	Name	Qty	L
1	4812100859	Wiring harness frame	1	

4812100860 Wiring harness power suplier 4812100860 Wiring harness power suplier

1

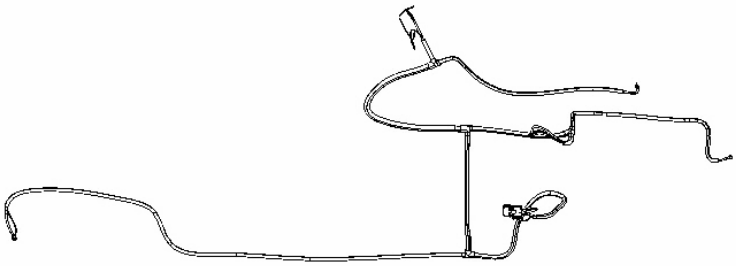

Item	Part No.	Name	Qty	L
1	4812100860	Wiring harness power suplier	1	

4812100199 Wiring harness go home 4812100199 Wiring harness go home

1

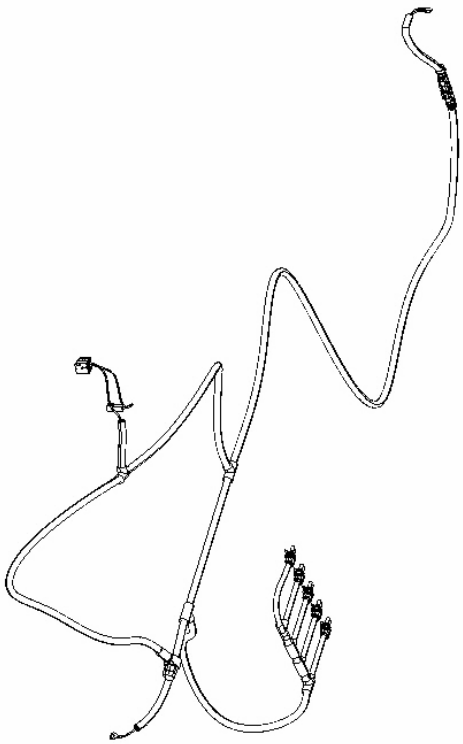

Item	Part No.	Name	Qty	L
1	4812100199	Wiring harness go home	1	

4812100685 Decal kit Decal, kit

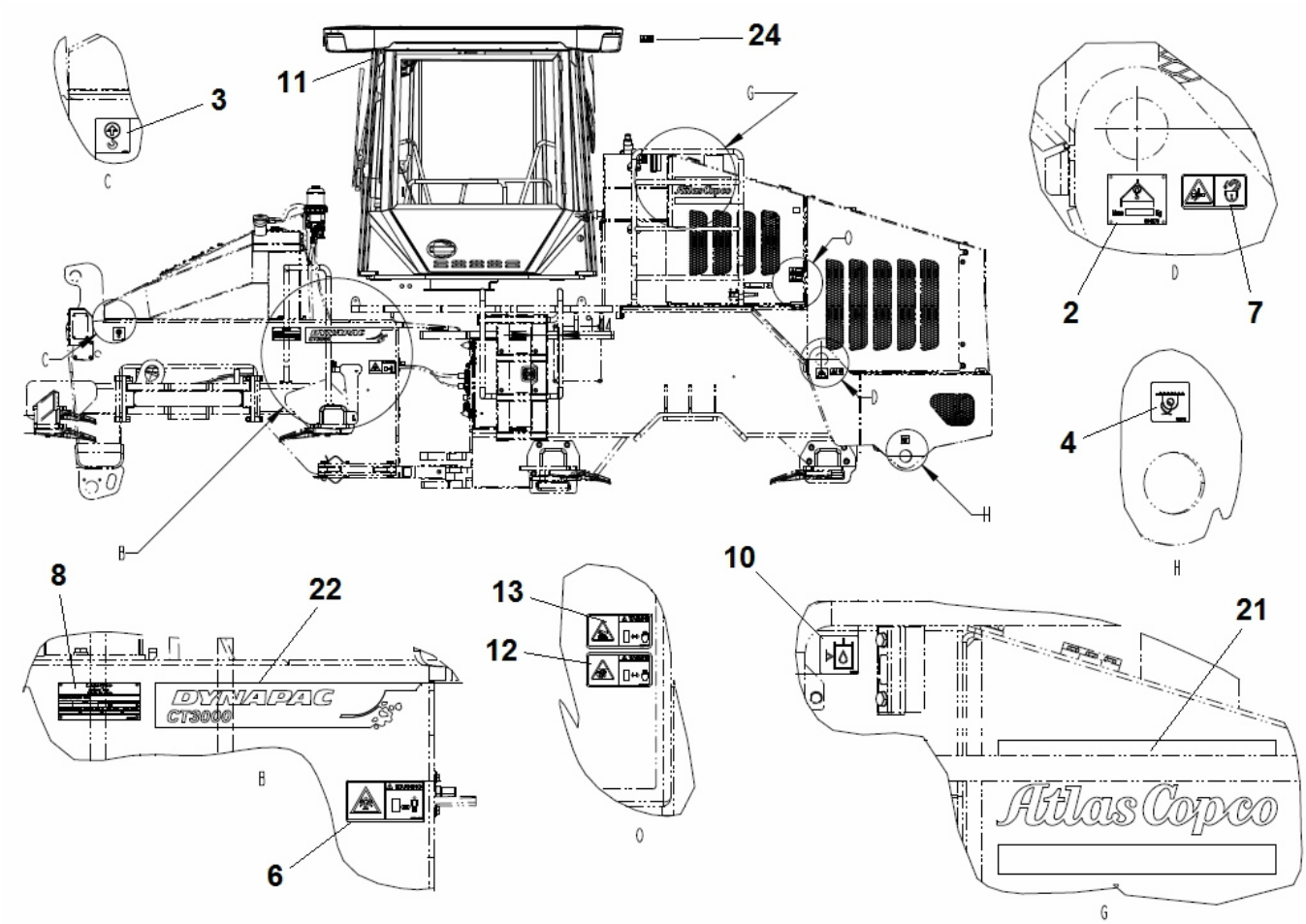

Item	Part No.	Name	Qty	L
1	4700904835	Decal "BATTERY POWER"	1	
2	4700904870	Lifting data plate	2	
3	4700588176	Decal "LIFT POINT"	2	
4	4700382751	Decal "SECURING POINT/TIE DOWN"	2	
5	4700377742	Reflector, red	2	
6	4700903422	Safety decal "CRUSH AREA"	2	
7	4700908229	Safety decal	2	
8	4812110674	Product indentification	1	
9	4700272372	Decal "HYDRAULIC OIL"	3	
10	4700272373	Label, hydraulic oil level	1	
11	4700192985	Decal, oil filter	1	
12	4700903423	Safety label, Rotating engine components	3	
13	4700903424	Safety label, hot surfaces	2	
14	4700388449	Decal "ENGINE COOLANT FILL"	1	
15	4700903459	Decal "SAFETY"	3	
16	4700373364	Slip protection	4	
17	4700373363	Slip protection	6	
18	4700370058	Non skid plate	6	
19	4812120125	Decal "Atlas Copco" White	1	
20	4812120117	Decal AC - logotype	1	
21	4812120126	Decal AC - logotype	3	
22	4812100039	Decal	1	
23	4812100040	Decal	1	
24	4700904165	Safety decal "Toxic gases"	1	

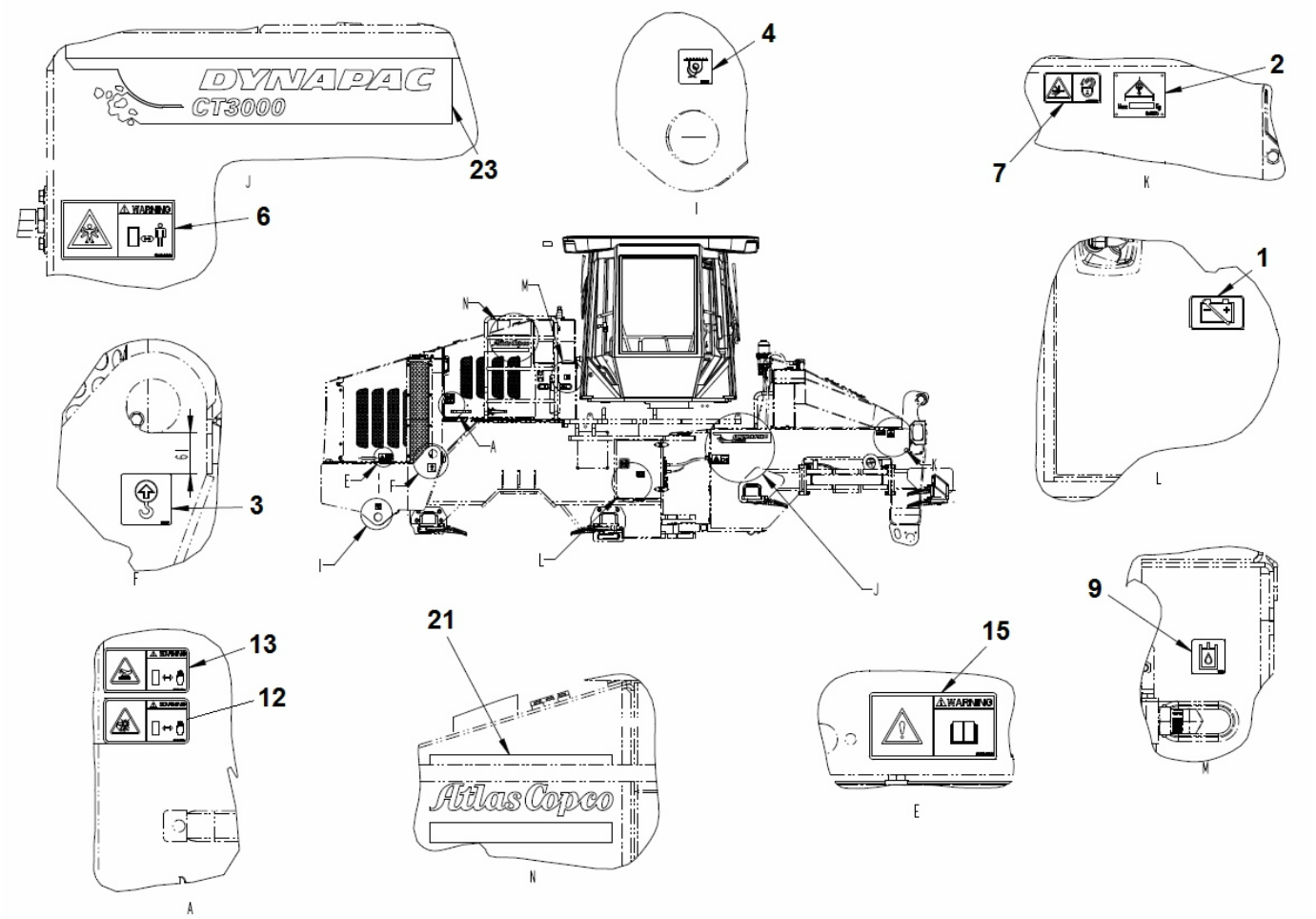
DYNAPAC
CT3000
23
6
4
2
7
1
3
9
13
12
21
Atlas Copco
15
WARNING

This page intentionally left blank

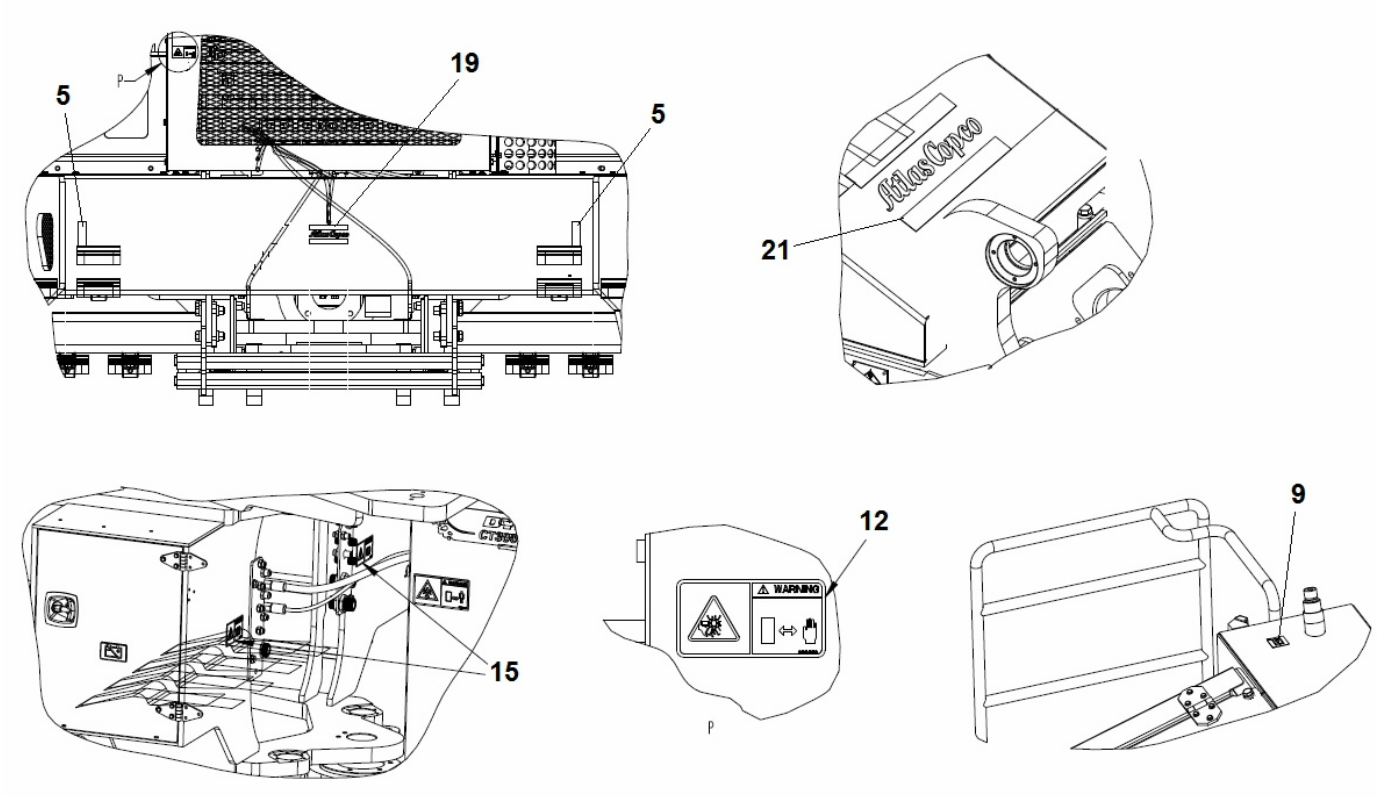
19
5
5
21
15
12
9
WARNING

This page intentionally left blank

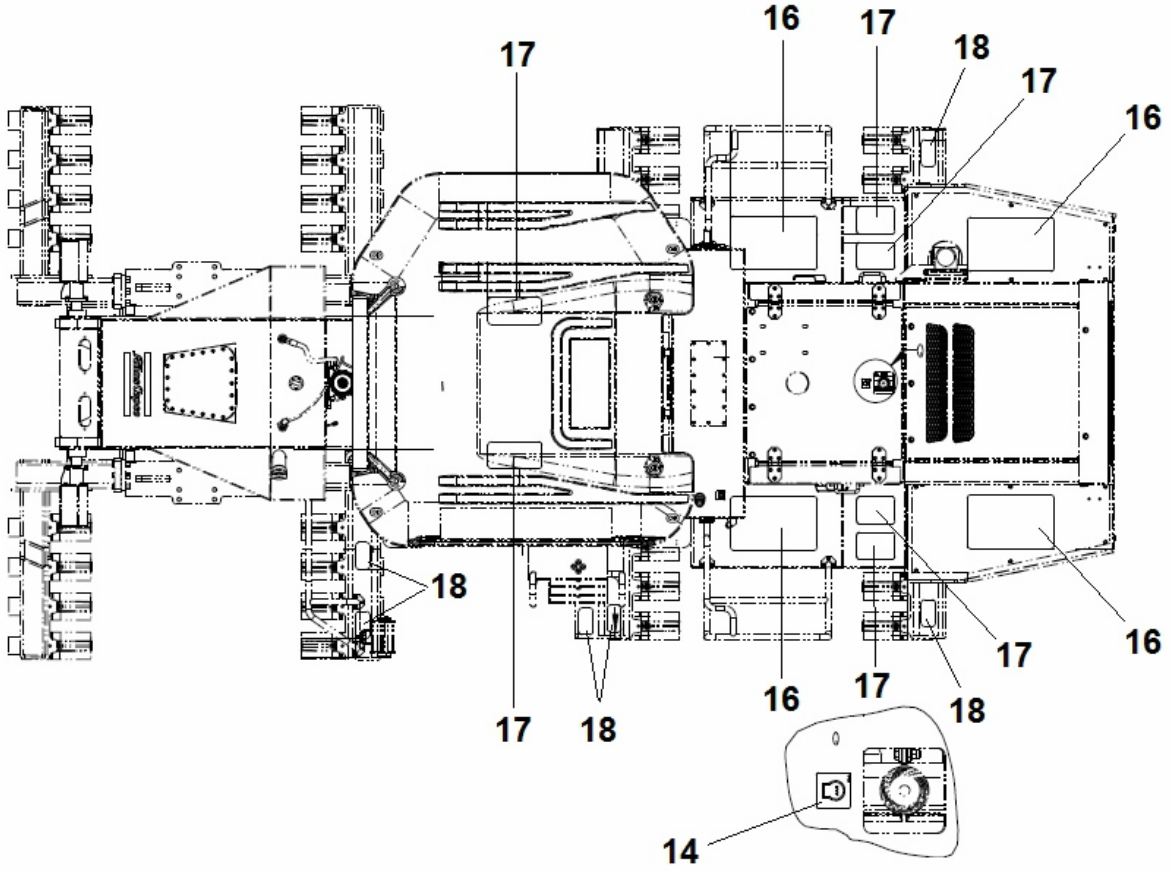
16
17
18
17
16
17
18
17
18
16
17
18
16
14

Protection cover for cylinder Protection cover module

This page intentionally left blank

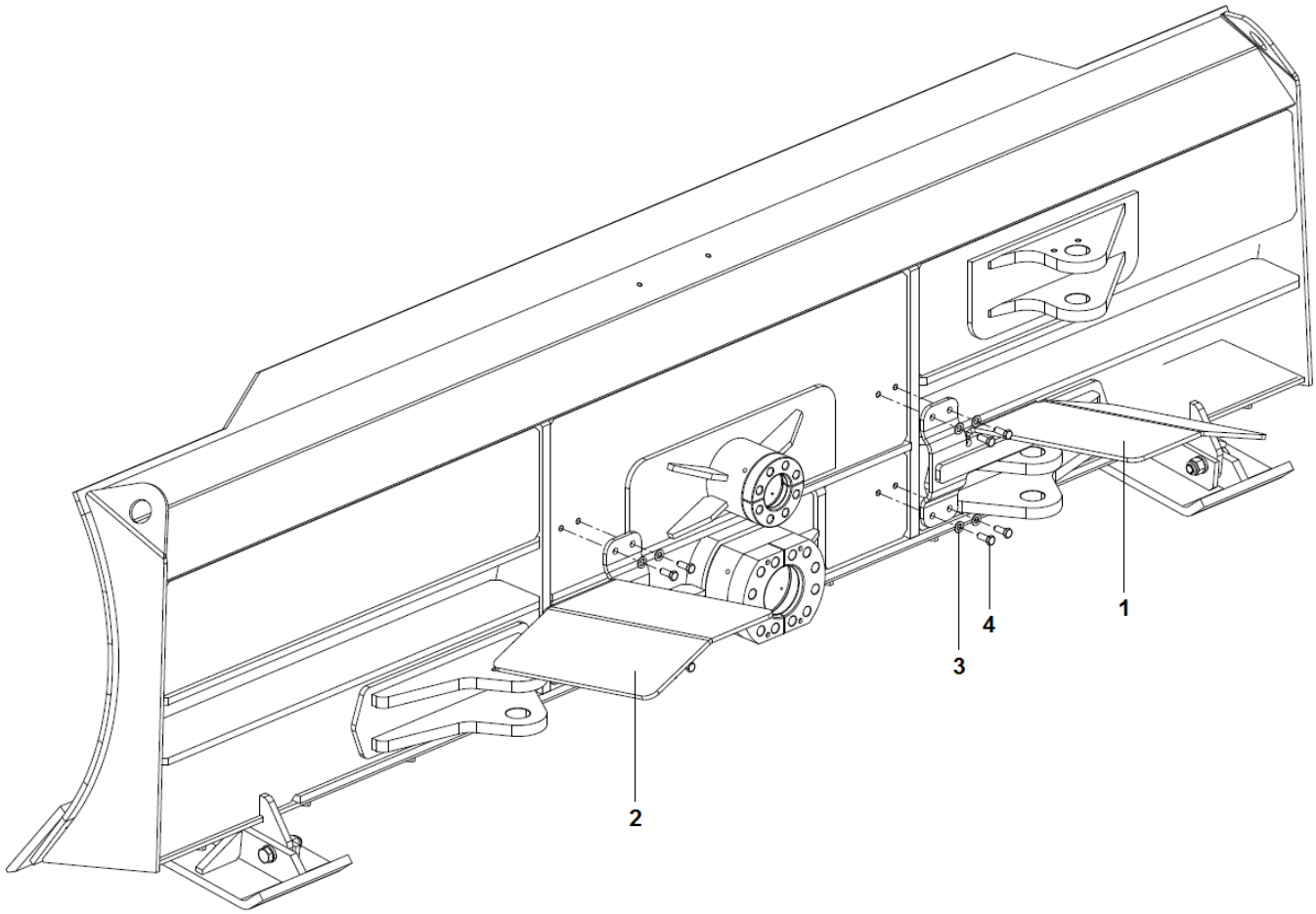
1
2
3
4

Item	Part No.	Name	Qty	L
1	4812317318	Protection cover RH	1	
2	4812317319	Protection cover LH	1	
3	4700904231	Steel plain washer, 13x24x2 mm 300 HV	8	
4	4700500046	Hex. head screw M12x030H	8	

4812100998 6-Way Blade 4812100998 Blade complete assy

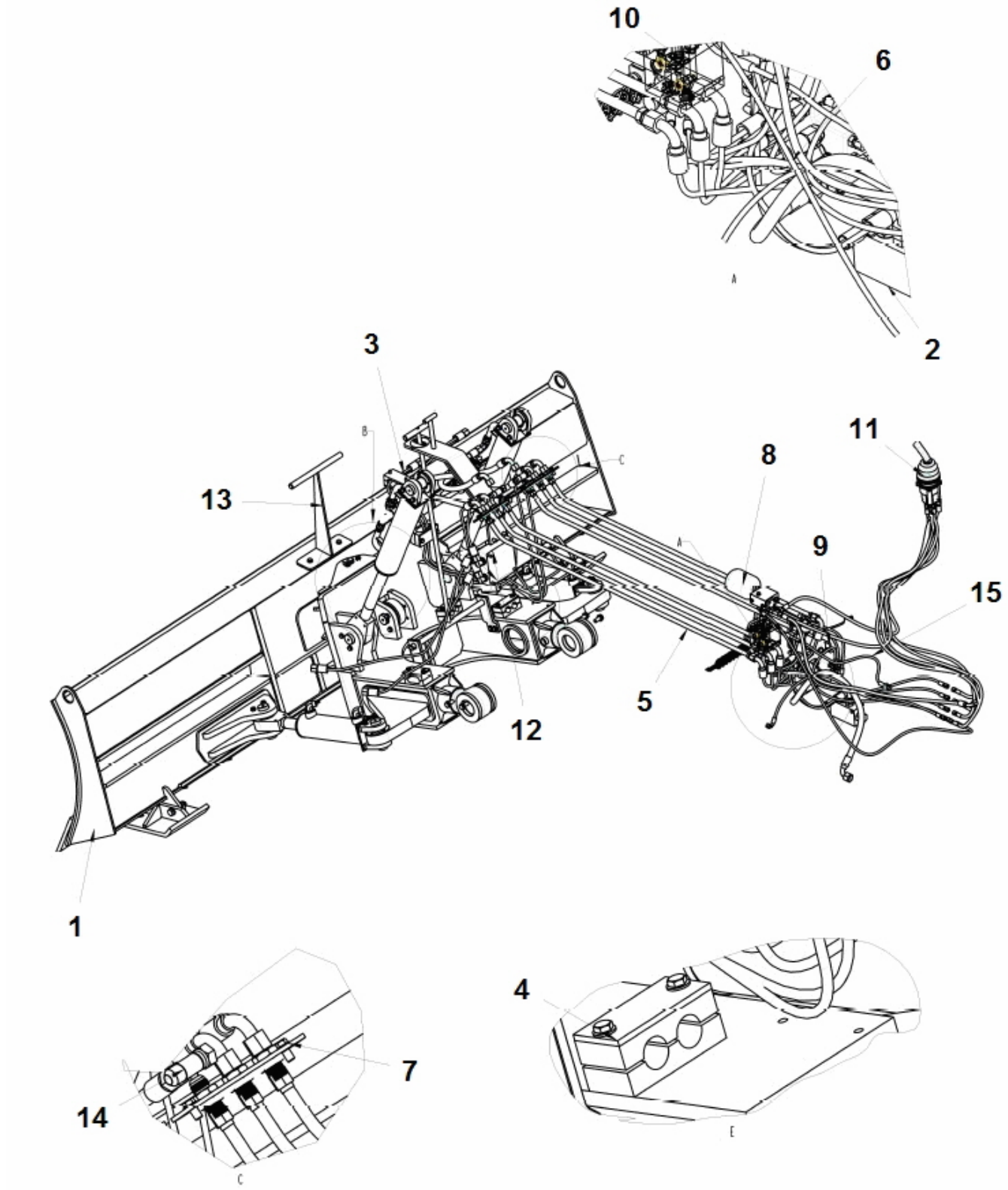

Item	Part No.	Name	Qty	L
1	4812100684	Tilt blade module	1	
2	4812100992	Flow regulator module	1	
3	4812100108	Bracket kit	3	
4	4812101070	Hose clamp module	1	
5	4700199679	Hydraulic tube	6	
6	4812100997	Hose blade kit	1	
6	-	Hose blade kit	1	
6	-	Hose blade kit	1	
6	-	Hose blade kit	1	
6	-	Hose blade kit	1	
7	4812100935	Tube bracket module	2	
8	4812100990	Pilot oil supply module	1	
9	4812101002	Valve module	1	
10	4812101003	Valve block module	1	
11	4812101005	Joystick assy	1	
12	4812101007	Block manifold module	1	
13	4812101009	Blade control module	1	
14	4700234243	T-connector	2	
15	4812100876	Wiring Harness Kit	1	

4812100998 6-Way Blade 4812100992 Flow regulator module

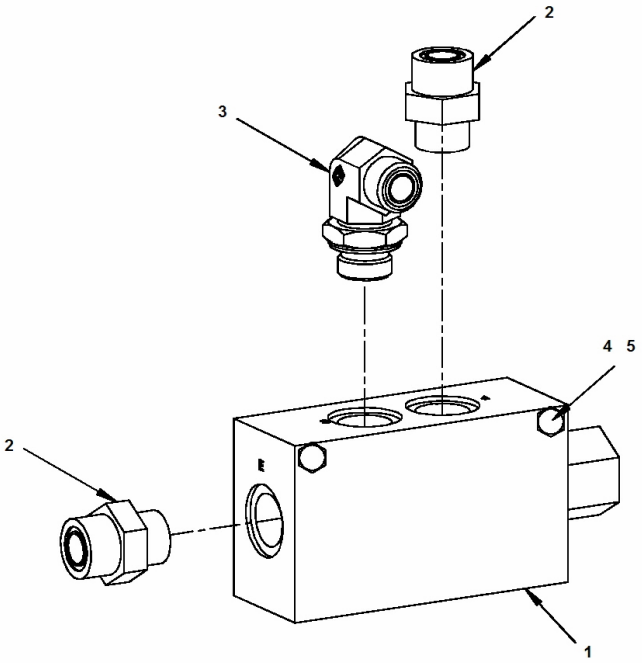

Item	Part No.	Name	Qty	L
1	4812100572	Flow regulator valve	1	
2	4700904728	Adapter	2	
3	4700792068	Elbow 90°	1	
4	4700904229	Washer, 8.4x16x1.5 mm 300 HV	2	
5	4700500090	Screw	2	

4812100998 6-Way Blade 4812100876 Wiring Harness Kit

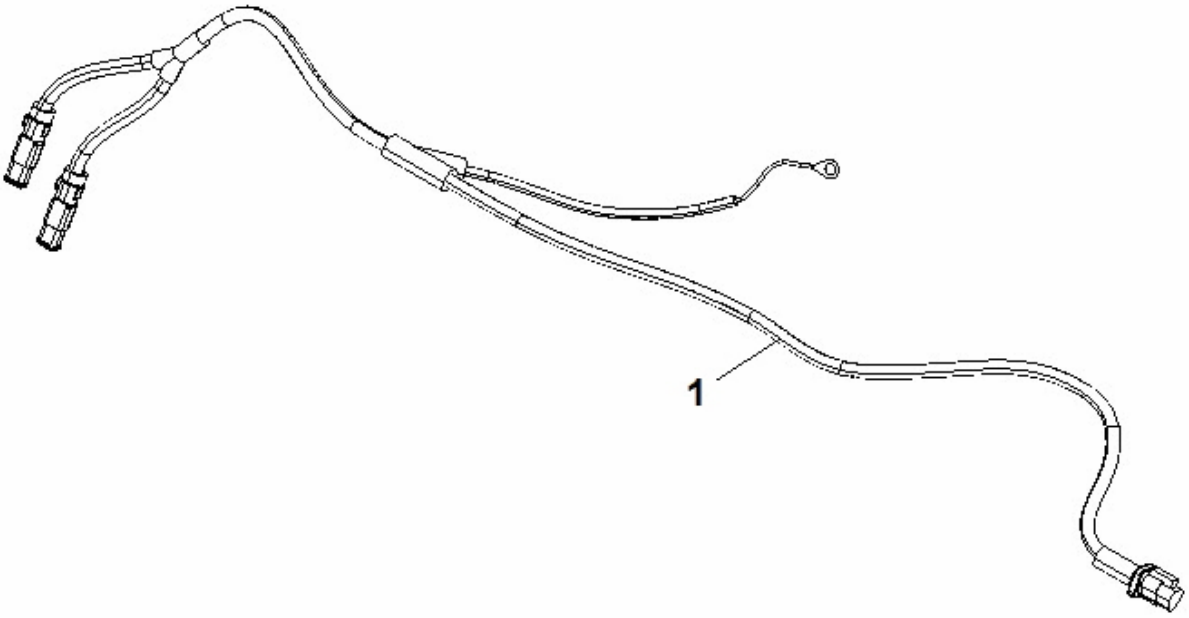

Item	Part No.	Name	Qty	L
1	4812100877	Wiring Harness	1	
2	4700313041	Cable tie	10	
3	4700395352	Cable tie holder	20	

4812100998 6-Way Blade 4812101009 Blade control module

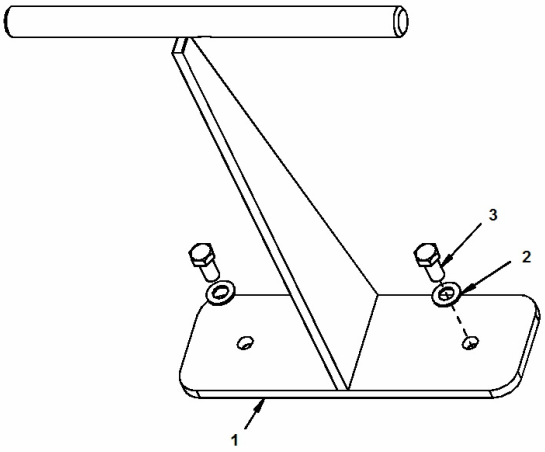

Item	Part No.	Name	Qty	L
1	4812101106	Blade control rule	1	
2	4700904230	Washer	2	
3	4700500028	Screw, M10x25 mm 8.8 A3K	2	

4812100998 6-Way Blade 4812101007 Block manifold module

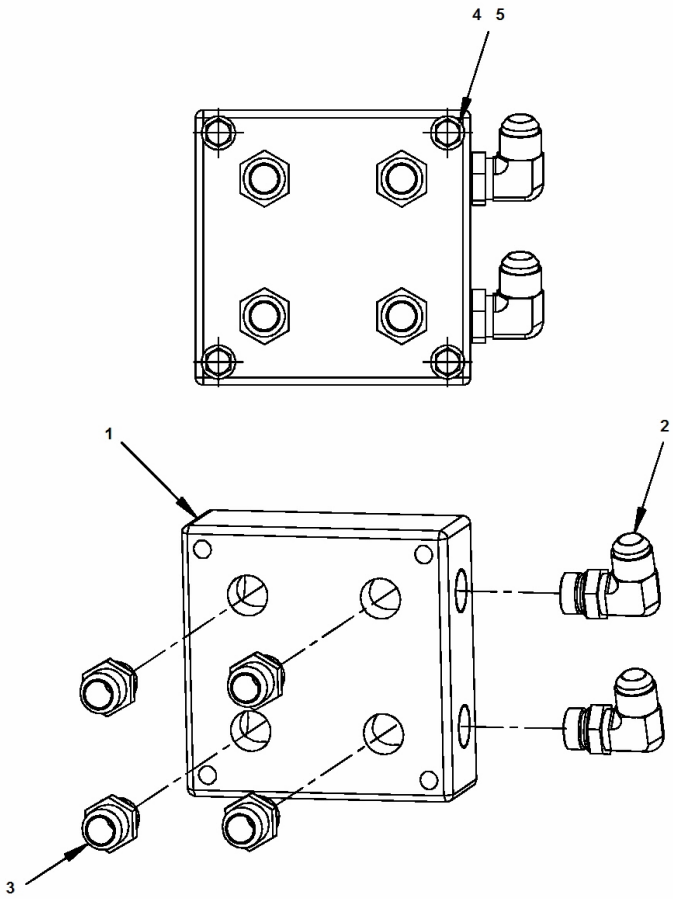

Item	Part No.	Name	Qty	L
1	4700198962	Manifold block	1	
2	4700813499	Elbow 90, O-ring	2	
3	4700334138	Adapter	4	
4	4700904230	Washer	4	
5	4700500192	Hex. screw	4	

4812100998 6-Way Blade 4812101005 Joystick assy

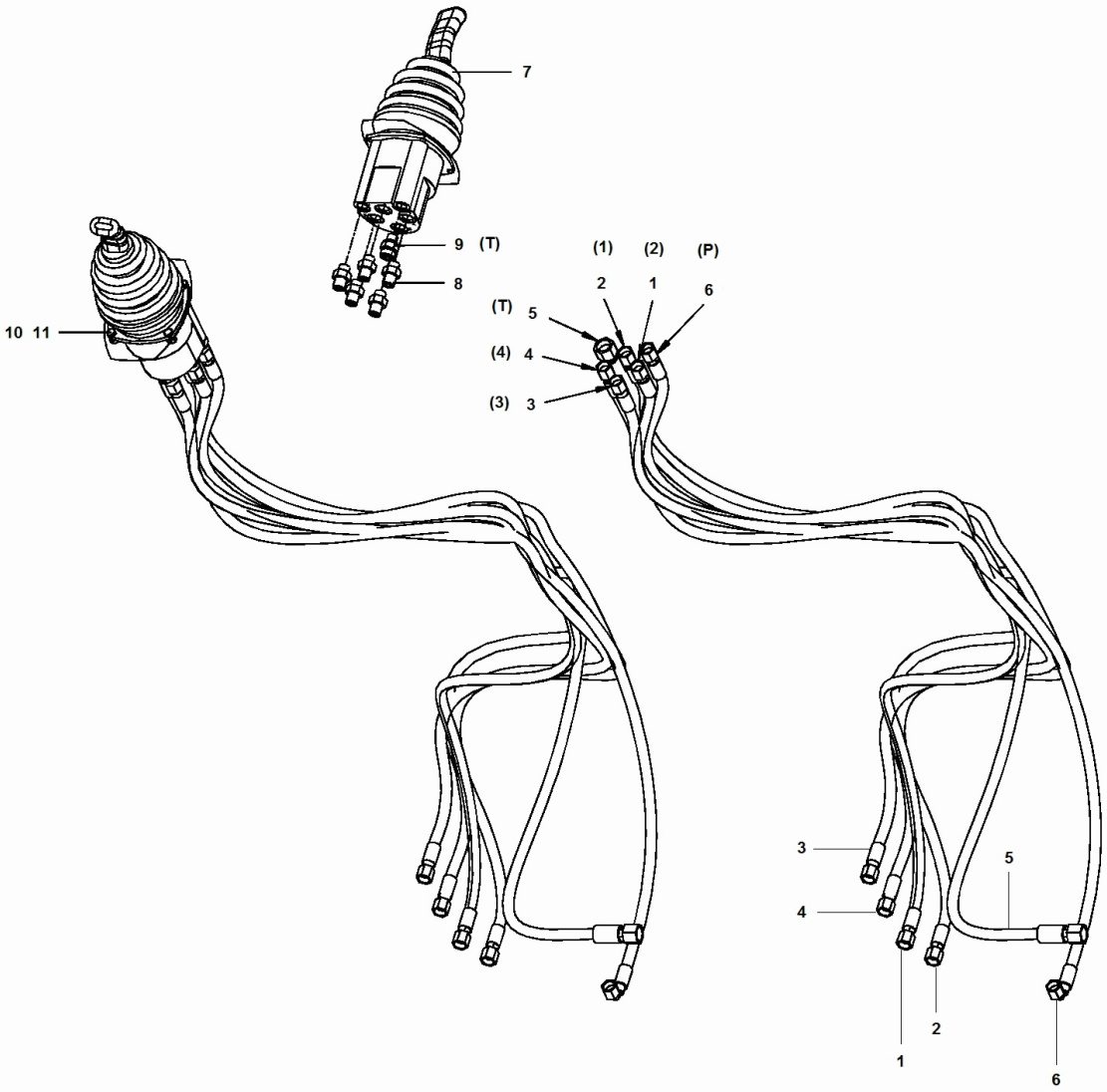

Item	Part No.	Name	Qty	L
1	4812101151	Hydraulic hose	1	
2	4812101150	Hydraulic hose	1	
3	4812101153	Hydraulic hose	1	
4	4812101154	Hydraulic hose	1	
5	4812100590	Hydraulic hose	1	
6	4700484006	Hydraulic hose	1	
7	4812100476	Joystick	1	
.7||1	4812317029	Replacement handle	1	
8	4700791541	Adapter	5	
9	4700792177	Straight connector	1	
10	4700500012	Hex. screw	4	
11	4700570004	Hex. nut	4	

4812100998 6-Way Blade 4812101003 Valve block module

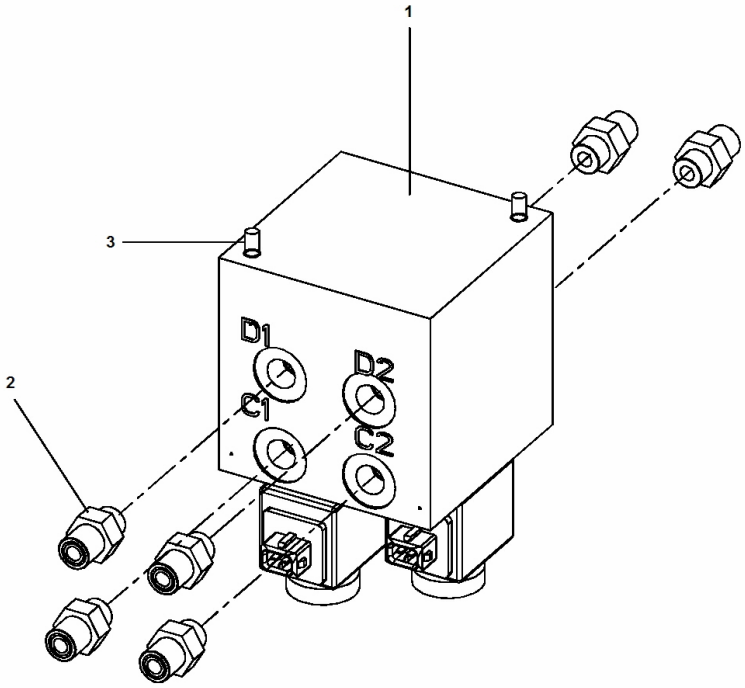

Item	Part No.	Name	Qty	L
1	4812100477	Manifold block	1	
2	4700791541	Adapter	6	
3	4812101105	Screw	2	

4812100998 6-Way Blade 4812101002 Valve module

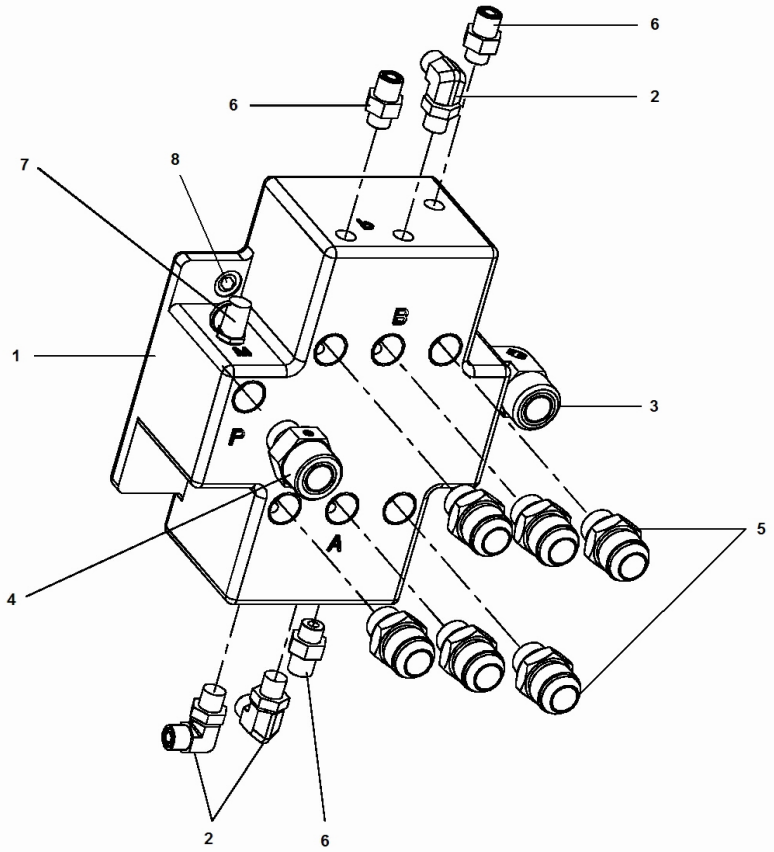

Item	Part No.	Name	Qty	L
1	4812100475	Control block	1	
2	4700791397	Elbow 90, O-ring	3	
3	4700791698	Elbow 90, O-ring with swivel	1	
4	4812100507	Straight adapter	1	
5	4700334139	Straight connector with o-ring	6	
6	4700791541	Adapter	3	
7	4700923405	Measuring nipple	1	
8	4700508096	Hexagon socket head cap screw	4	

4812100998 6-Way Blade 4812100990 Pilot oil supply module

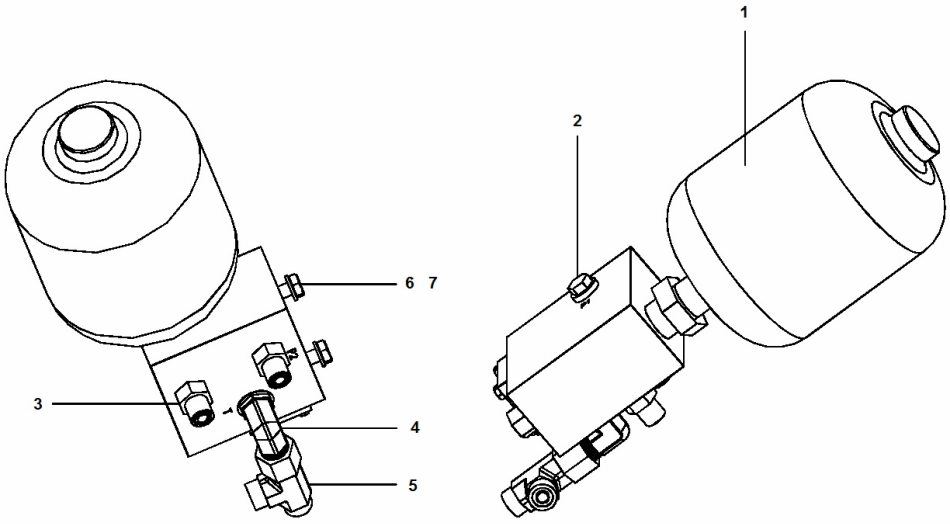

Item	Part No.	Name	Qty	L
1	4812100478	Pilot oil supply	1	
2	4700332038	Plug	1	
3	4700791541	Adapter	2	
4	0570704101	Connector Elbow 90	1	
5	4700791414	T-connection, O-ring with swivel	1	
6	4700904229	Washer, 8.4x16x1.5 mm 300 HV	2	
7	4700500100	HEXAGON SCREW M	2	

4812100998 6-Way Blade 4812100935 Tube bracket module

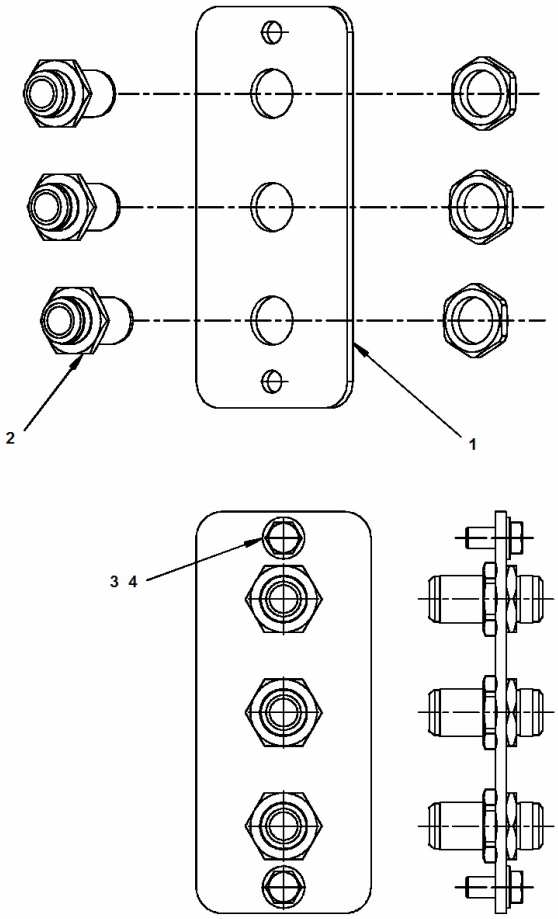

Item	Part No.	Name	Qty	L
1	4812316083	Cover	1	
2	4700230456	Straight connector	3	
3	4700904231	Steel plain washer, 13x24x2 mm 300 HV	2	
4	4700500051	Hex. screw	2	

4812100998 6-Way Blade Hose blade kit

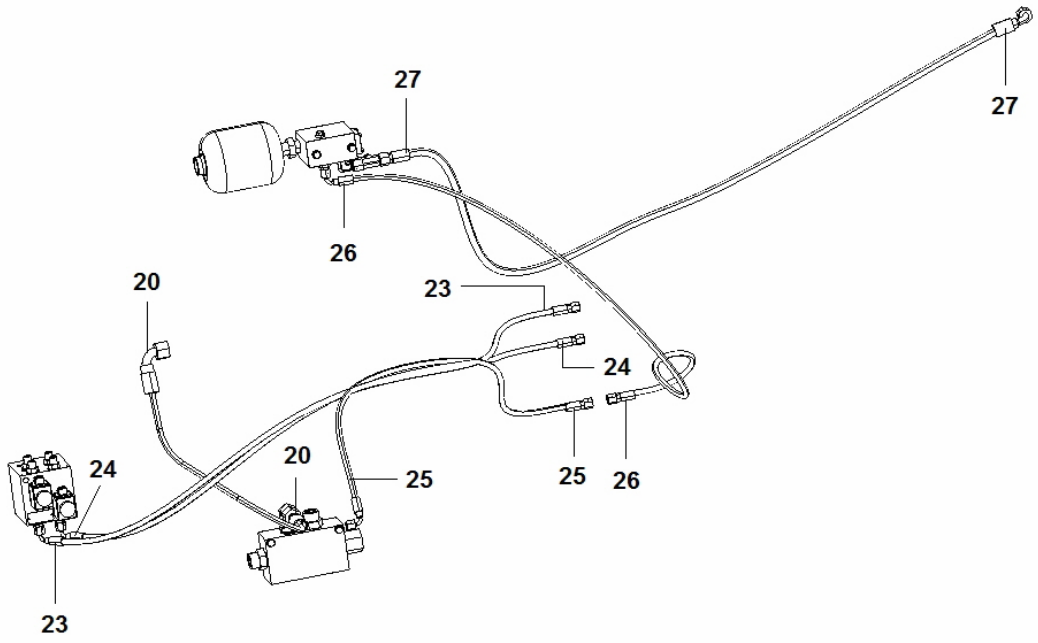

Item	Part No.	Name	Qty	L
20	4811000393	Hydraulic hose	1	
23	4812101152	Hydraulic hose	1	
24	4812101152	Hydraulic hose	1	
25	4812101145	Hydraulic hose	1	
26	4700484231	Hydraulic hose	1	
27	4812101135	Hydraulic hose	1	

4812100998 6-Way Blade Hose blade kit

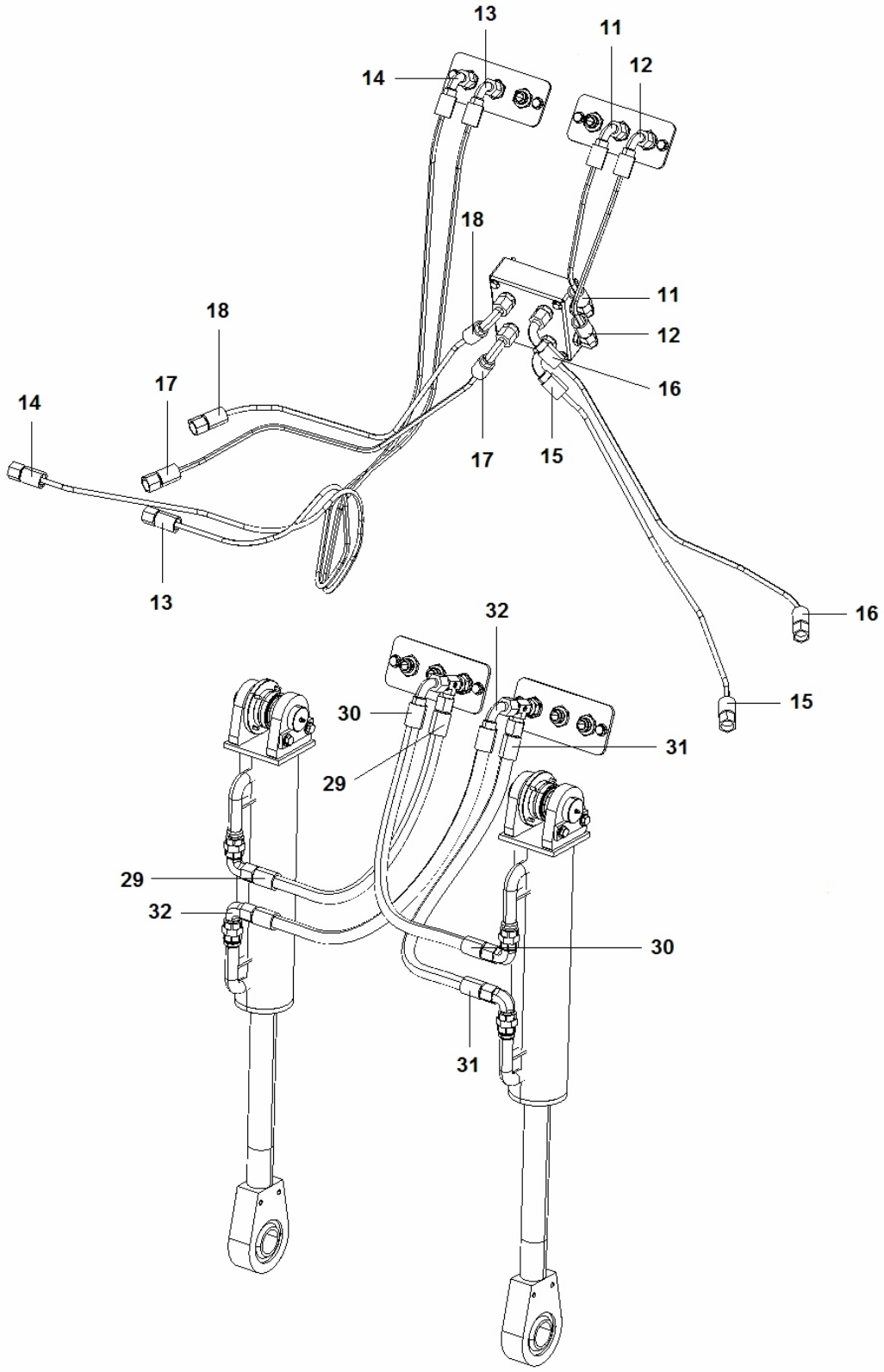

Item	Part No.	Name	Qty	L
11	4812100609	Hydraulic hose	1	
12	4812101166	Hydraulic hose	1	
13	4812101171	Hydraulic hose	1	
14	4812101172	Hydraulic hose	1	
15	4812101157	Hydraulic hose	1	
16	4812101159	Hydraulic hose	1	
17	4812101157	Hydraulic hose	1	
18	4812101159	Hydraulic hose	1	
29	4812101698	Hydraulic hose	1	
30	4812116245	Hydraulic hose	1	
31	4812101698	Hydraulic hose	1	
32	4812116245	Hydraulic hose	1	

4812100998 6-Way Blade Hose blade kit

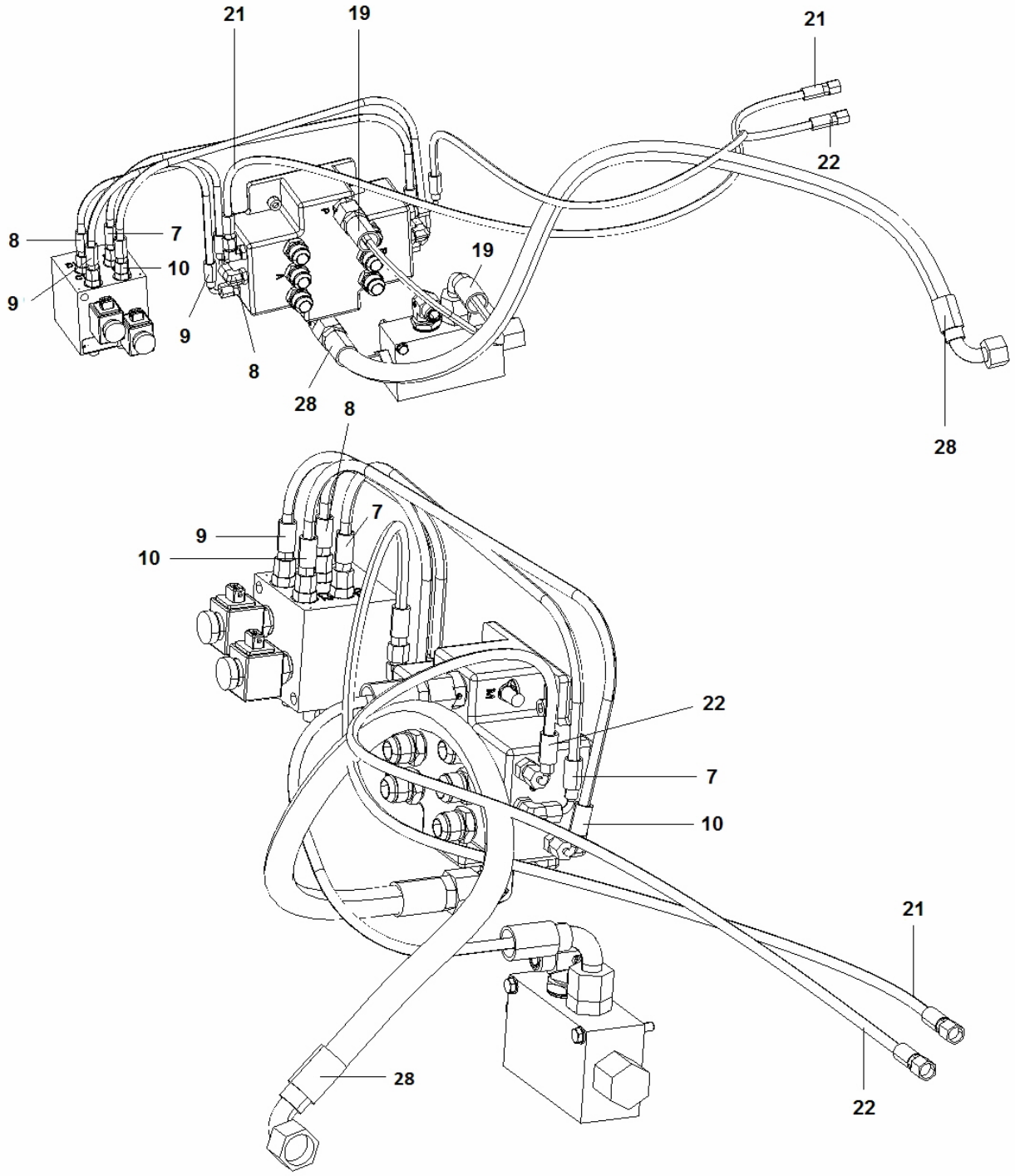

Item	Part No.	Name	Qty	L
7	4811000363	Hydraulic hose	1	
8	4700483836	Hydraulic hose	1	
9	4700483836	Hydraulic hose	1	
10	4700483837	Hydraulic hose	1	
19	4812101144	Hydraulic hose	1	
21	4812101168	Hydraulic hose	1	
22	4700484031	Hydraulic hose	1	
28	4812101177	Hydraulic hose	1	

4812100998 6-Way Blade Hose blade kit

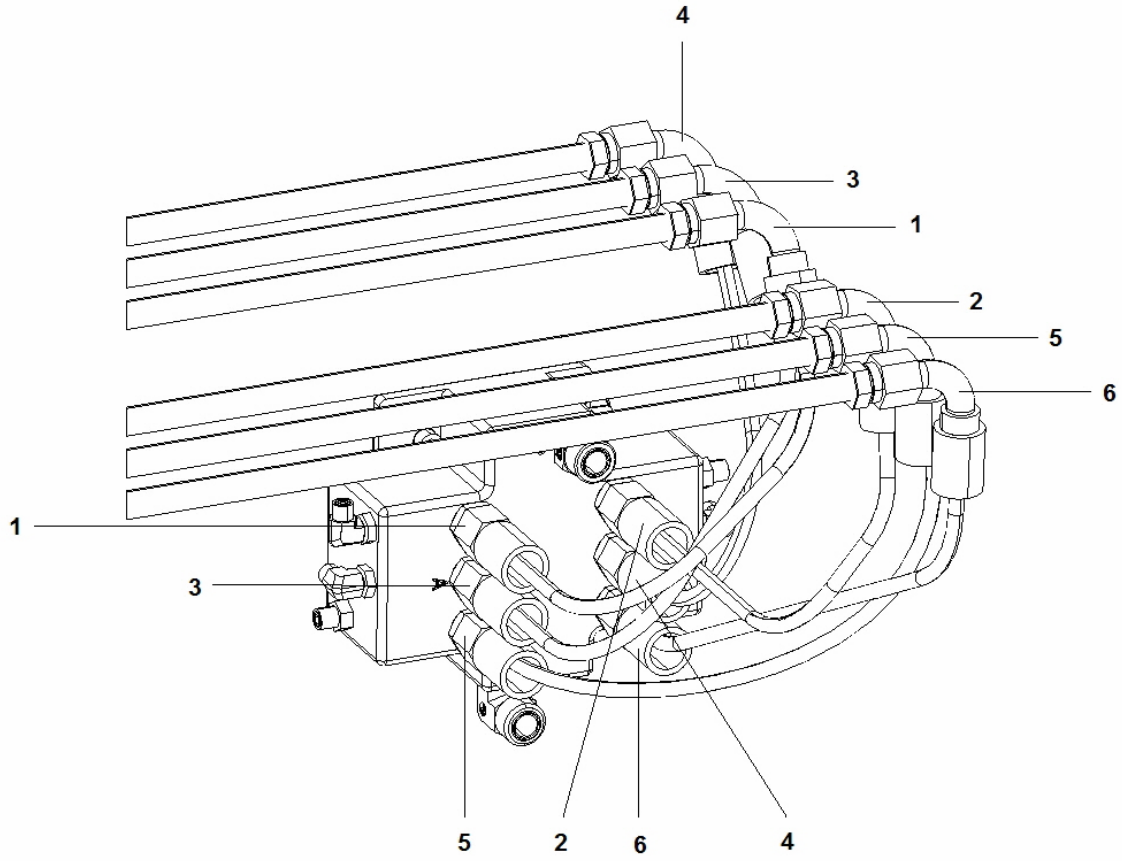

Item	Part No.	Name	Qty	L
1	4812100609	Hydraulic hose	1	
2	4812100609	Hydraulic hose	1	
3	4812101147	Hydraulic hose	1	
4	4812101147	Hydraulic hose	1	
5	4812101148	Hydraulic hose	1	
6	4812101148	Hydraulic hose	1	

4812100998 6-Way Blade 4812100997 Hose blade kit

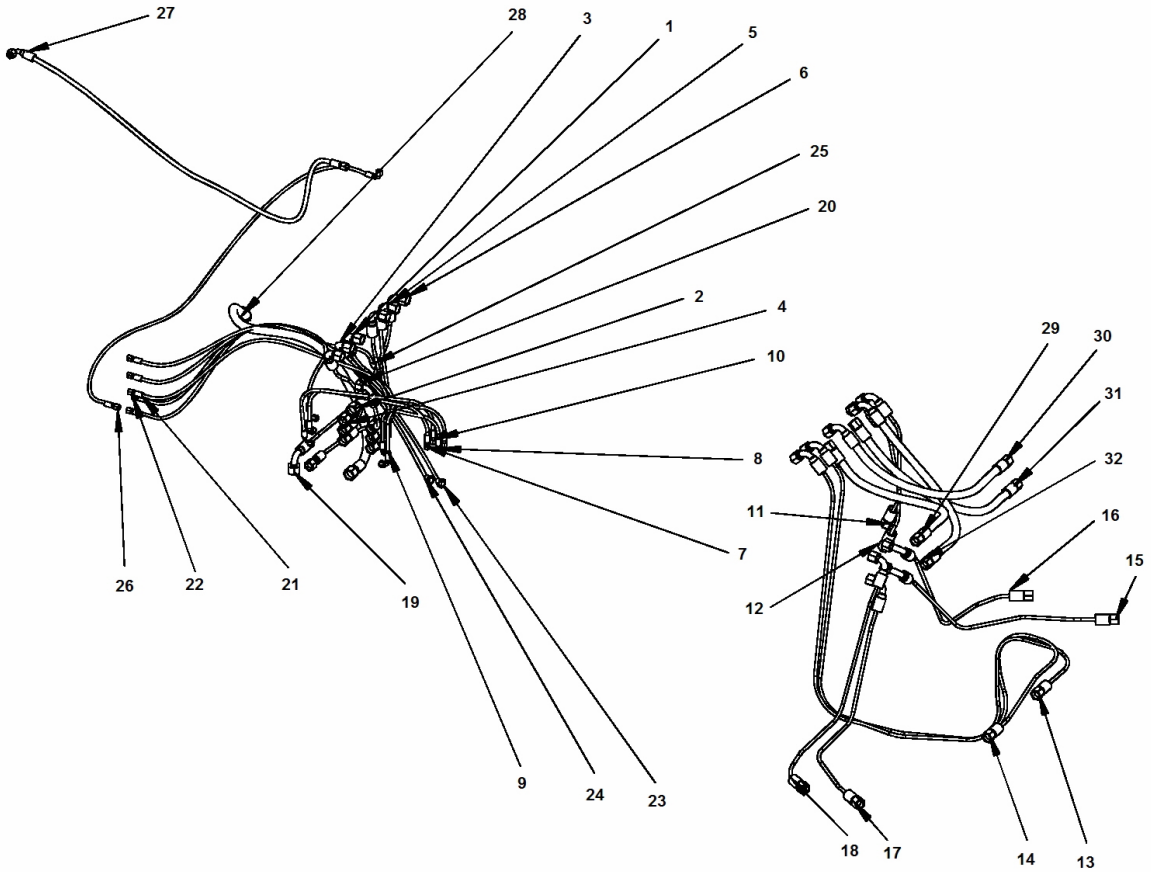

Item	Part No.	Name	Qty	L
1	4812100609	Hydraulic hose	1	
2	4812100609	Hydraulic hose	1	
3	4812101147	Hydraulic hose	1	
4	4812101147	Hydraulic hose	1	
5	4812101148	Hydraulic hose	1	
6	4812101148	Hydraulic hose	1	
7	4811000363	Hydraulic hose	1	
8	4700483836	Hydraulic hose	1	
9	4700483836	Hydraulic hose	1	
10	4700483837	Hydraulic hose	1	
11	4812100609	Hydraulic hose	1	
12	4812101166	Hydraulic hose	1	
13	4812101171	Hydraulic hose	1	
14	4812101172	Hydraulic hose	1	
15	4812101157	Hydraulic hose	1	
16	4812101159	Hydraulic hose	1	
17	4812101157	Hydraulic hose	1	
18	4812100093	Hydraulic hose	1	
19	4812101144	Hydraulic hose	1	
20	4811000393	Hydraulic hose	1	
21	4812101168	Hydraulic hose	1	
22	4700484031	Hydraulic hose	1	
23	4812101152	Hydraulic hose	1	
24	4812101152	Hydraulic hose	1	
25	4812101145	Hydraulic hose	1	
26	4700484231	Hydraulic hose	1	
27	4812101135	Hydraulic hose	1	
28	4812101177	Hydraulic hose	1	
29	4812101698	Hydraulic hose	1	
30	4812116245	Hydraulic hose	1	
31	4812101698	Hydraulic hose	1	
32	4812116245	Hydraulic hose	1	

4812100998 6-Way Blade 4812101070 Hose clamp module

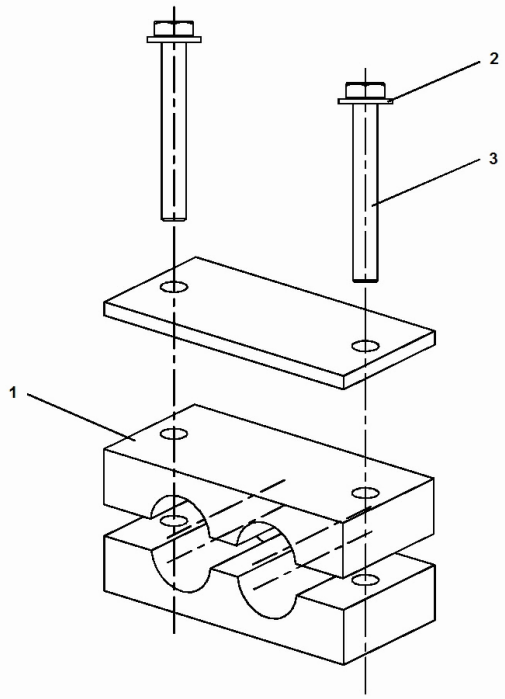

Item	Part No.	Name	Qty	L
1	4812101101	Hose clamp assy	1	
2	4700904230	Washer	2	
3	4700500092	Screw	2	

4812100998 6-Way Blade 4812100108 Bracket kit

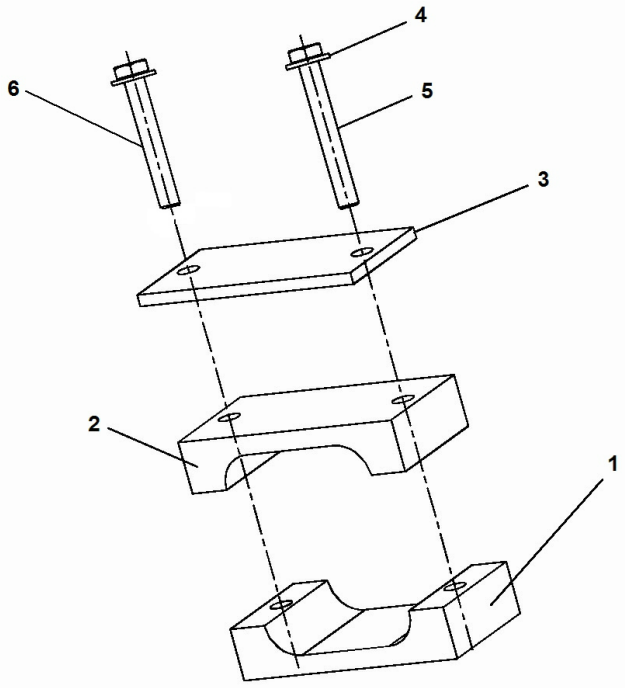

Item	Part No.	Name	Qty	L
1	4700343872	Hose clamp	1	
2	4700343732	Hose clamp	1	
3	4700335914	Cover plate	1	
4	4700904230	Washer	2	
5	4700500077	Screw	1	
6	4700500192	Hex. screw	1	

4812100684 Tilt blade module 4812100684 Tilt blade module

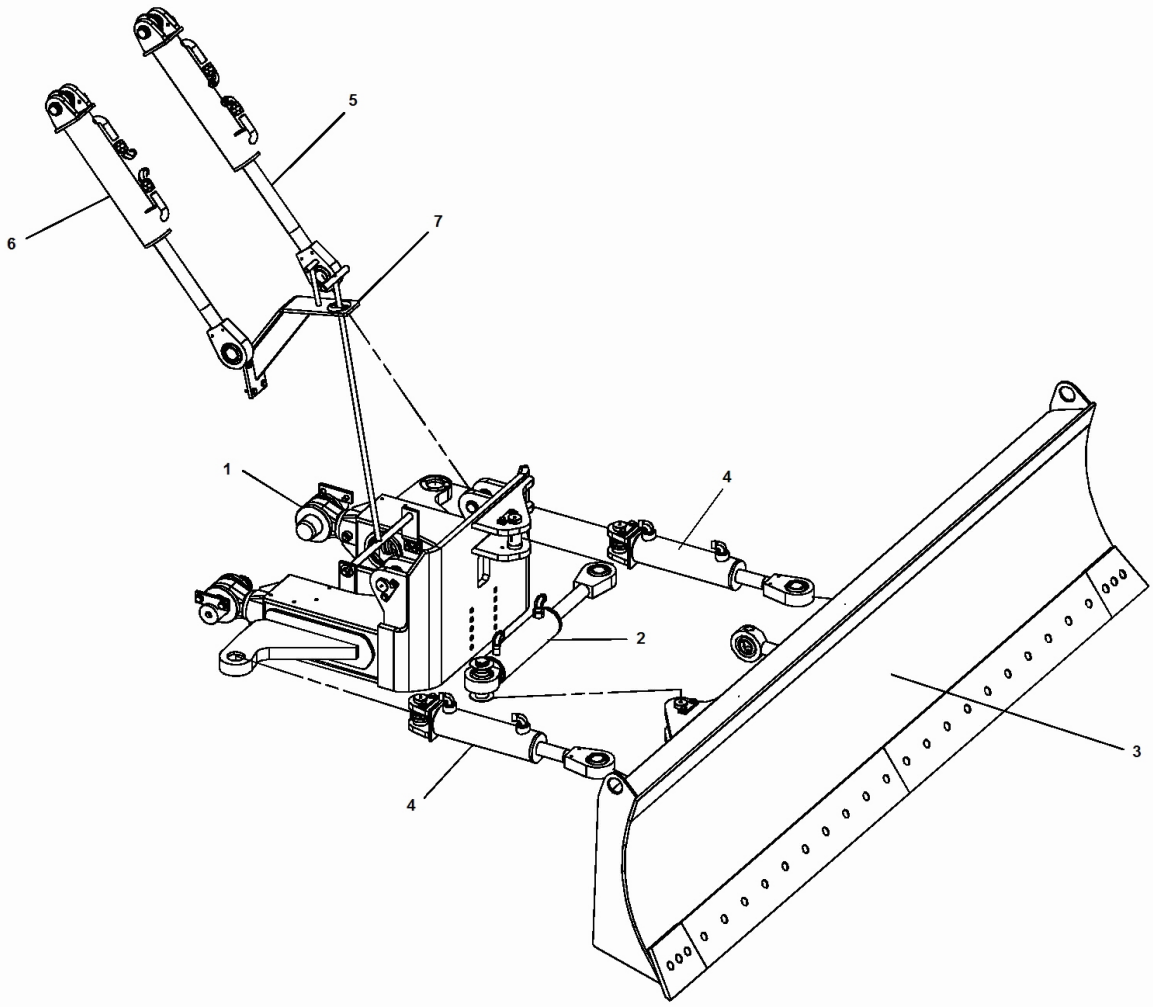

Item	Part No.	Name	Qty	L
1	4812101010	Blade arm module	1	
2	4812101014	Blade cylinder module	1	
3	4812101016	Blade equipped module	1	
4	4812101019	Blade cylinder module	2	
5	4812101396	Cylinder module	1	
6		Cylinder module	1	
7	4812101844	Mounting the display device height	1	

4812100684 Tilt blade module 4812101844 Mounting the display device height

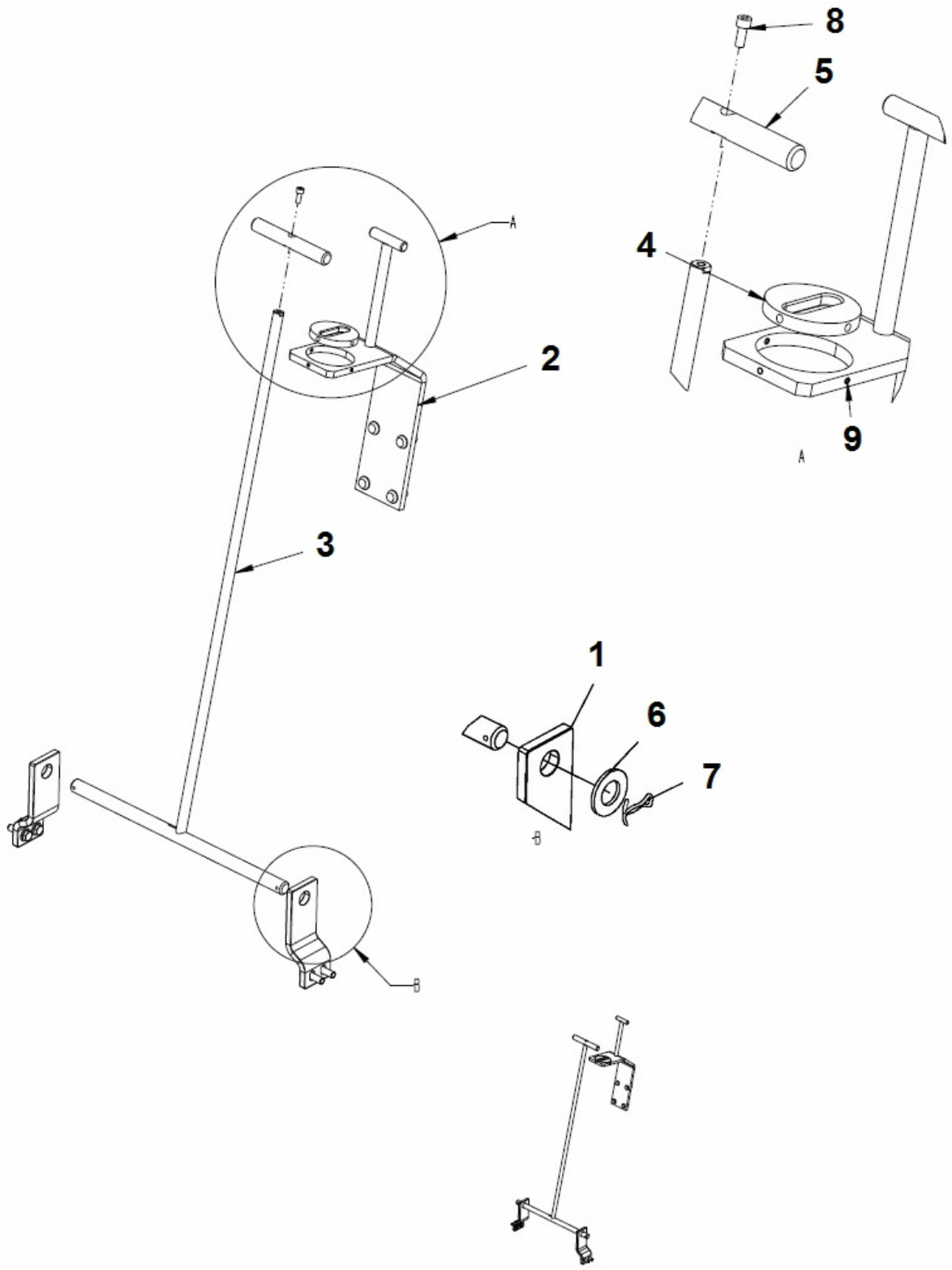

Item	Part No.	Name	Qty	L
1	4812101848	Mounting bearing	2	
2		Bracket visualization	1	
3	4812101842	Measuring rod	1	
4	4812101839	Bushing nylon	1	
5	4812101843	Auxiliary view	1	
6	4700602008	Washer	2	
7	4700630016	Cotter pin	2	
8	4700508092	Screw	1	
9	4700516051	Set screw	3	

4812100684 Tilt blade module Bracket visualization

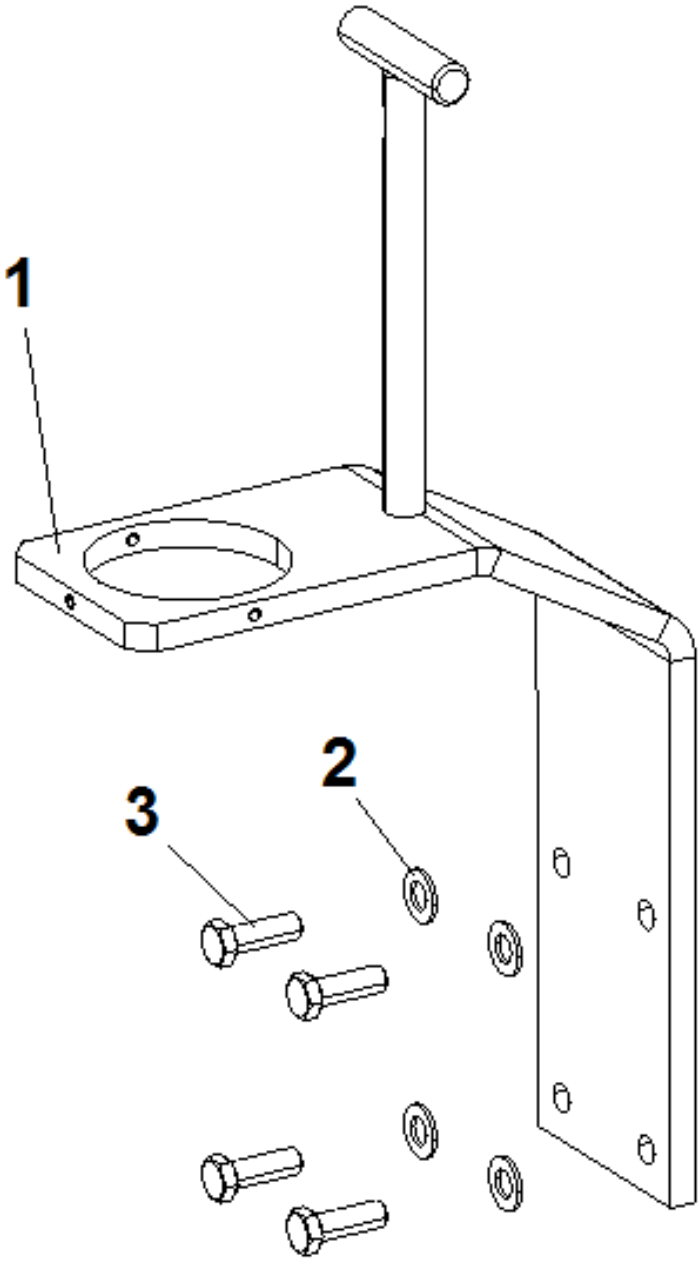

Item	Part No.	Name	Qty	L
1	4812315871	Display support	1	
2	4700904231	Steel plain washer, 13x24x2 mm 300 HV	4	
3	4700947688	Screw M12 x 35 mm	4	

4812100684 Tilt blade module 4812101398 Cylinder module

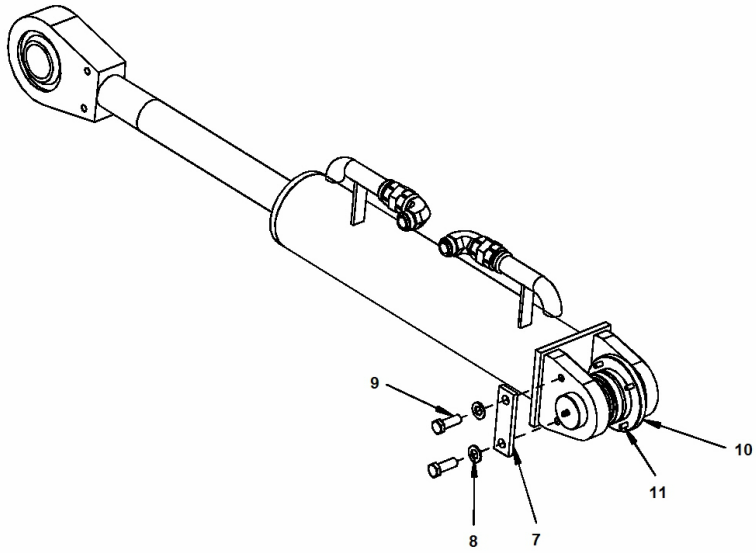

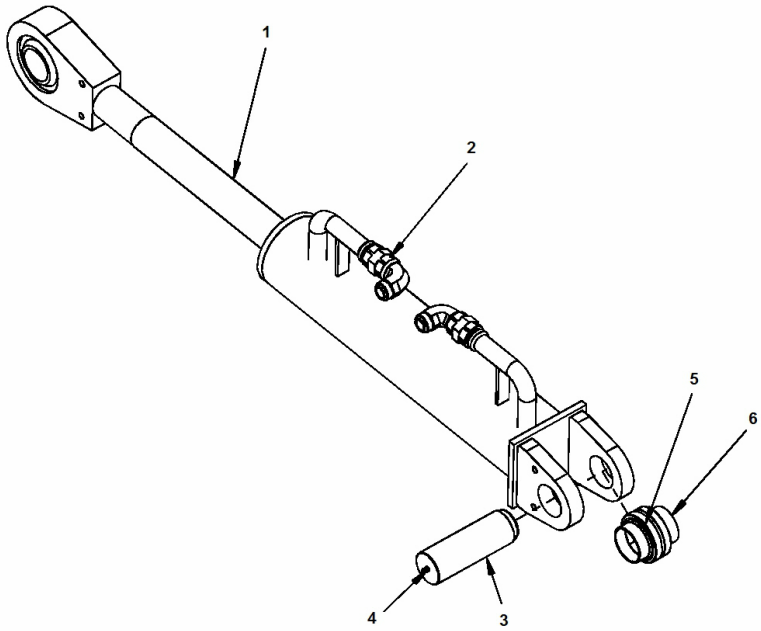

Item	Part No.	Name	Qty	L
1	4812315860	Hydraulic cylinder	1	
2	4700334128	Connector Elbow 90	2	
3	4812316341	Pin	1	
4	4700310022	Grease nipple	1	
5	4700928155	Bearing	1	
6	4700266467	Spacer ring	2	
7	4700253723	Lock	1	
8	4700904231	Steel plain washer, 13x24x2 mm 300 HV	2	
9	4700500037	Hex. screw	2	
10	4700266468	Ring	1	
11	4700508002	Cylinder screw	4	
12	4700199425	Seal kit	1	

Comments for Page: 4812101398 Cylinder module

(L)OCAL REMARKS

A | en_US | Not shown in illustration

4812100684 Tilt blade module 4812101396 Cylinder module

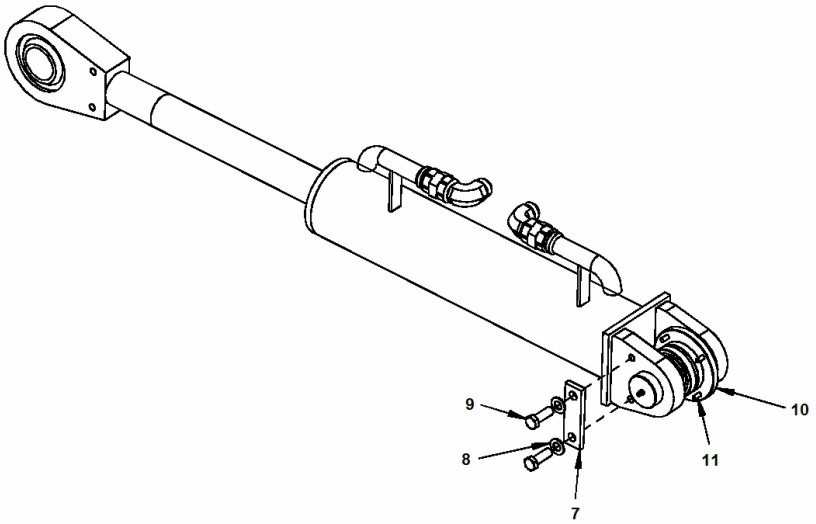

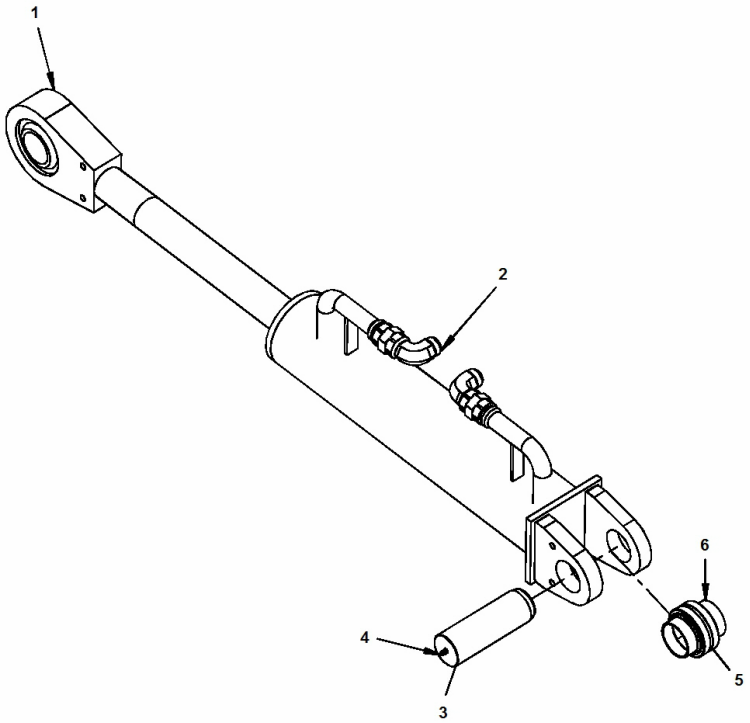

Item	Part No.	Name	Qty	L
1	4812315860	Hydraulic cylinder	1	
2	4700334128	Connector Elbow 90	2	
3	4812316341	Pin	1	
4	4700310022	Grease nipple	1	
5	4700928155	Bearing	1	
6	4700266467	Spacer ring	2	
7	4700253723	Lock	1	
8	4700904231	Steel plain washer, 13x24x2 mm 300 HV	2	
9	4700500037	Hex. screw	2	
10	4700266468	Ring	1	
11	4700508002	Cylinder screw	4	
12	4700199425	Seal kit	1	

Comments for Page: 4812101396 Cylinder module

(L)OCAL REMARKS

A | en_US | Not shown in illustration

4812100684 Tilt blade module 4812101019 Blade cylinder module

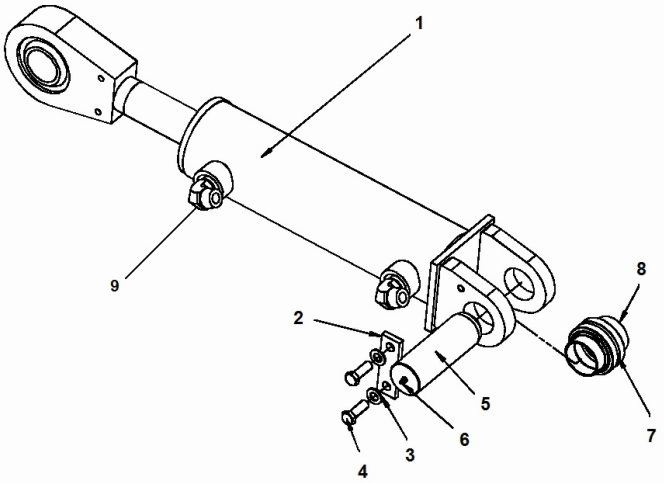

Item	Part No.	Name	Qty	L
1	4812100733	Hydraulic cylinder	1	
2	4700253723	Lock	1	
3	4700904231	Steel plain washer, 13x24x2 mm 300 HV	2	
4	4700500037	Hex. screw	2	
5	4812101019	Blade cylinder module	1	
6	4700310022	Grease nipple	1	
7	4700928155	Bearing	1	
8	4700266467	Spacer ring	2	
9	4700334128	Connector Elbow 90	2	
10	4700199425	Seal kit	1	

Comments for Page: 4812101019 Blade cylinder module

(L)OCAL REMARKS

A | en_US | Not shown in illustration

4812100684 Tilt blade module 4812101016 Blade equipped module

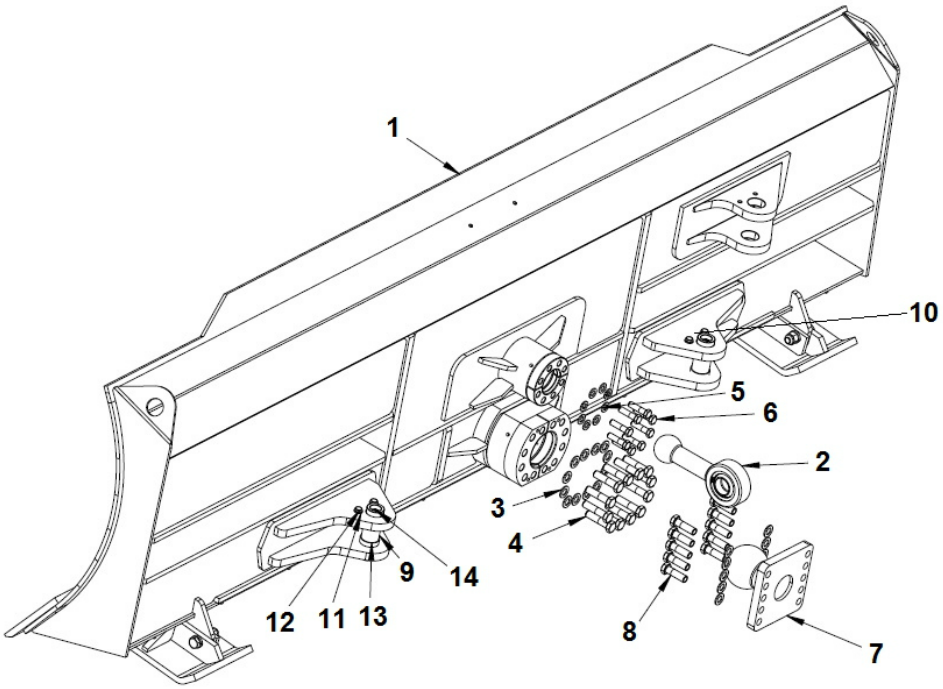

Item	Part No.	Name	Qty	L
1	4812315885	Blade assy	1	
2	4812101371	Shaft	1	
3	4700904233	Steel plain washer 21x36x3	22	
4	4700500287	Screw M20x80 10,9	12	
5	4700904232	Steel plain washer	8	
6	4700500270	Screw M16x60 10,9	8	
7	4812101400	Trunnion	1	
8	4700947706	Hex. screw	10	
9	4812316340	Pin	2	
10	4700253723	Lock	2	
11	4700904231	Steel plain washer, 13x24x2 mm 300 HV	4	
12	4700500037	Hex. screw	4	
13	4700198543	Shim	4	
14	4700310022	Grease nipple	2	

4812100684 Tilt blade module 4812101014 Blade cylinder module

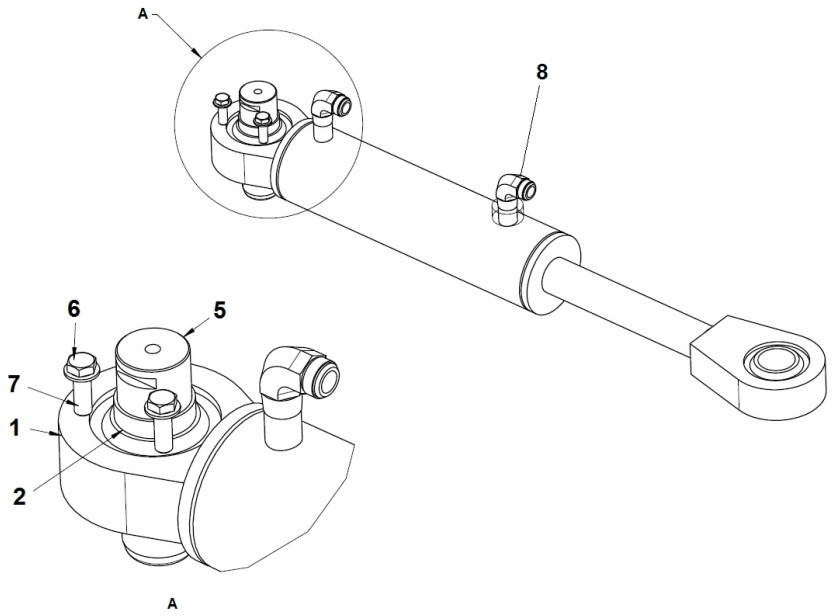

Item	Part No.	Name	Qty	L
1	4812100732	Hydraulic cylinder	1	
2	4700198543	Shim	2	
3	4700253723	Lock	1	
4	4700310022	Grease nipple	1	
5	4812316340	Pin	1	
6	4700904231	Steel plain washer, 13x24x2 mm 300 HV	2	
7	4700500037	Hex. screw	2	
8	4700334128	Connector Elbow 90	2	
9	4700199426	Seal kit	1	A

Comments for Page: 4812101014 Blade cylinder module

(L)OCAL REMARKS

A | en_US | Not shown in illustration

4812100684 Tilt blade module 4812101010 Blade arm module

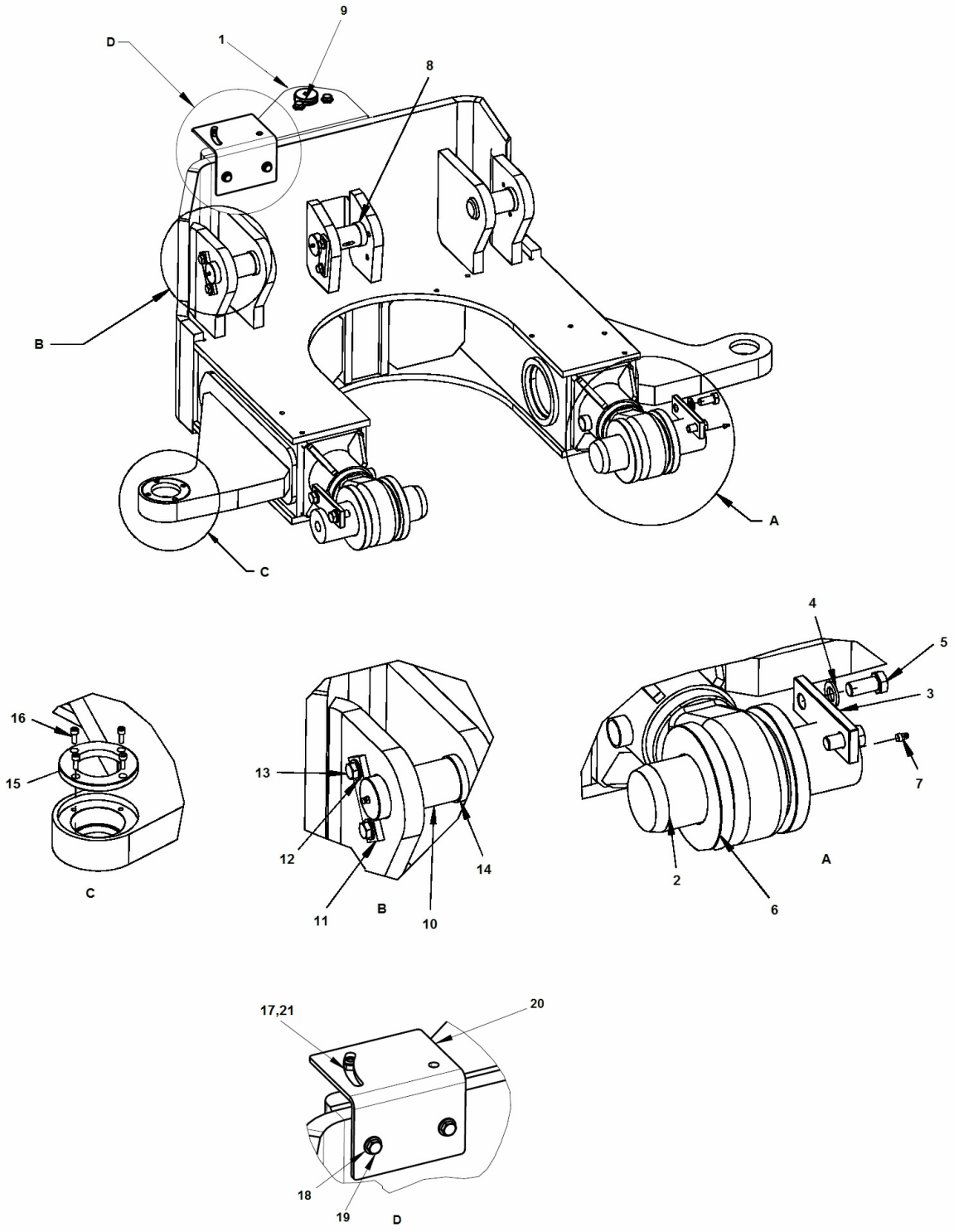

Item	Part No.	Name	Qty	L
1	4812100641	Blade arm	1	
2	4700260219	Pin	2	
3	4700253485	Lock	2	
4	4700904232	Steel plain washer	4	
5	4700500123	Hex. screw	4	
6	4700253577	Washer	4	
7	4700310022	Grease nipple	6	
8	4700198543	Shim	4	
9	4812316340	Pin	2	
10	4812316341	Pin	2	
11	4700253723	Lock	4	
12	4700904231	Steel plain washer, 13x24x2 mm 300 HV	8	
13	4700500037	Hex. screw	8	
14	4700198536	Shim	4	
15	4700266468	Ring	2	
16	4700508002	Cylinder screw	8	
17	4700586018	Lock nut	1	
18	4700904230	Washer	3	
19	4812100110	Bracket	1	
20	4700500027	Screw M10-1,55x22 8.8	2	
21	4700904567	Washer, 10.5x28x6 mm 300 HV	1	

4812316155 2-Way Blade Tilt blade

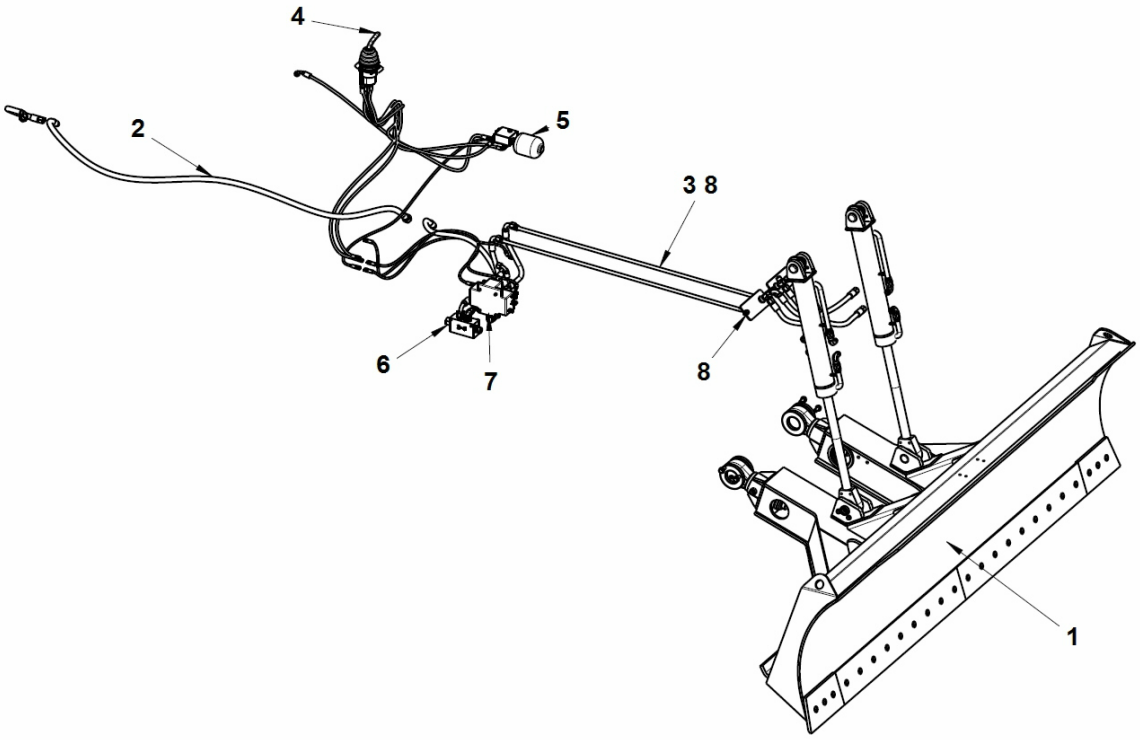

Item	Part No.	Name	Qty	L
1	4812316166	Leveling blade kit	1	
2	4812101290	Hoses kit	1	
3	4700199679	Hydraulic tube	2	
4	4812101293	Joystick hoses kit	1	
5	4812100990	Pilot oil supply module	1	
6	4812100992	Flow regulator module	1	
7	4812101002	Valve module	1	
8	4812101291	Tube bracket module	2	

4812316155 2-Way Blade Leveling blade kit

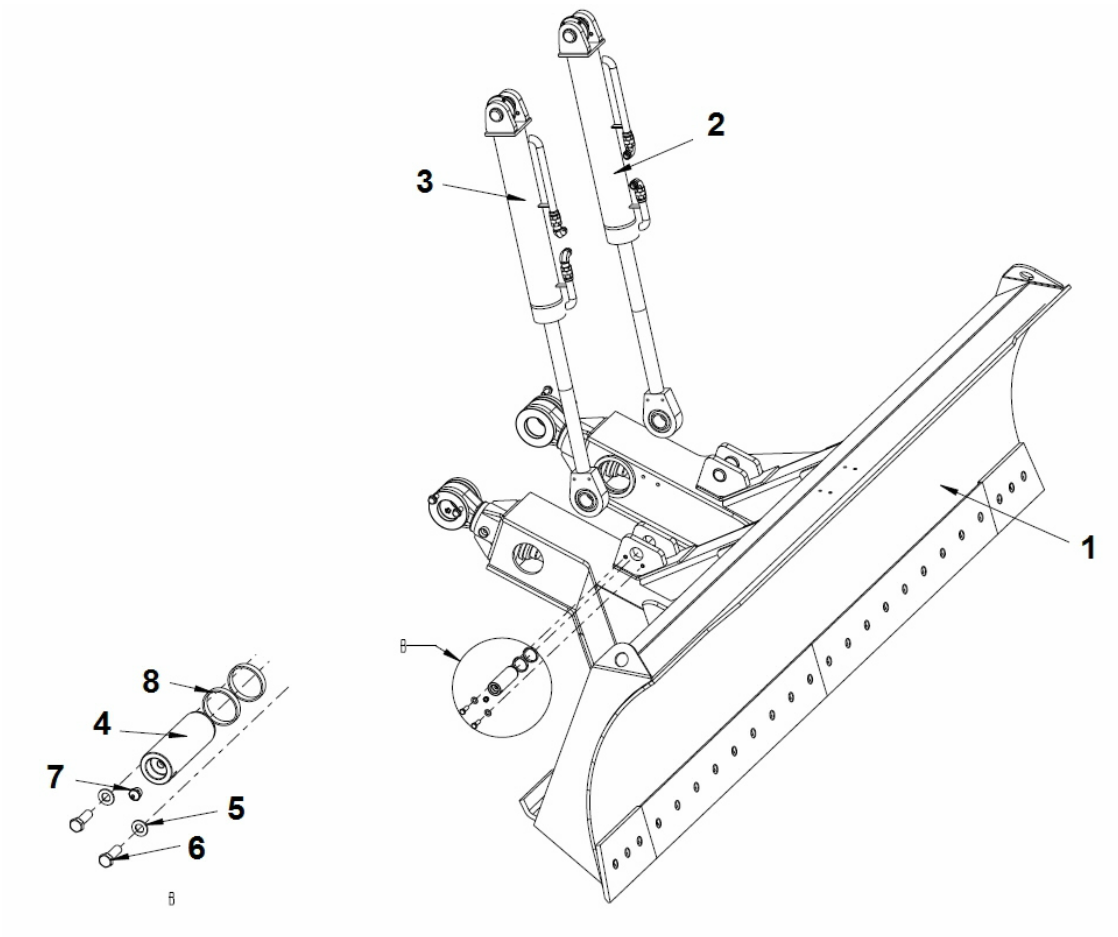

Item	Part No.	Name	Qty	L
1	4812316165	Levelling blade module	1	
2	4812101396	Cylinder module	1	
3		Cylinder module	1	
4	4812316341	Pin	2	
5	4700904231	Steel plain washer, 13x24x2 mm 300 HV	4	
6	4700500037	Hex. screw	4	
7	4700310037	Grease nipple	2	
8	4700198536	Shim	4	

4812316155 2-Way Blade Levelling blade module

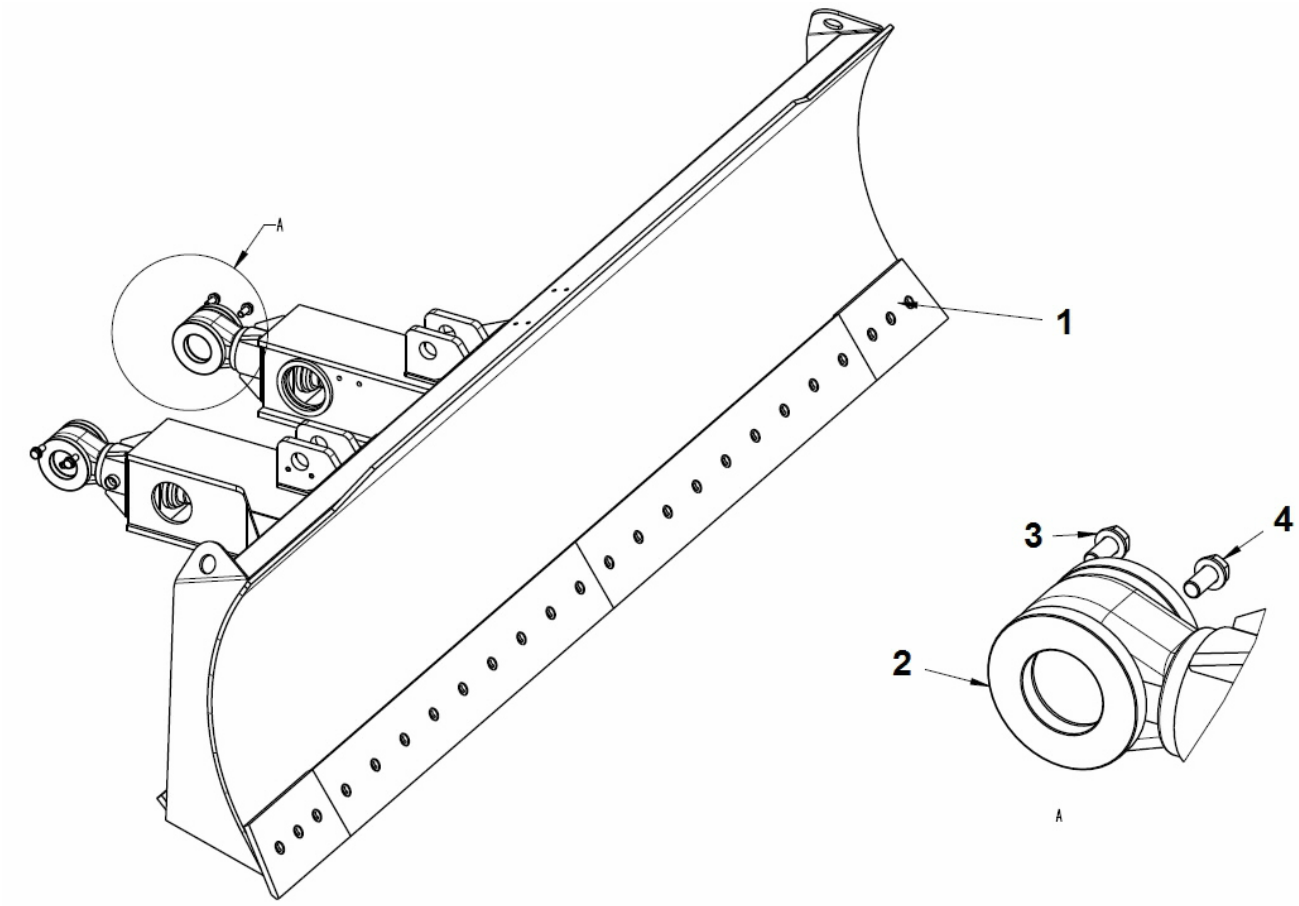

Item	Part No.	Name	Qty	L
1	4812316164	Levelling blade	1	
2	4700253577	Washer	4	
3	4700904232	Steel plain washer	4	
4	4700500123	Hex. screw	4	
5	4700260219	Pin	2	
6	4700253485	Lock	2	
7	4700310037	Grease nipple	2	

4812316155 2-Way Blade Joystick hoses kit

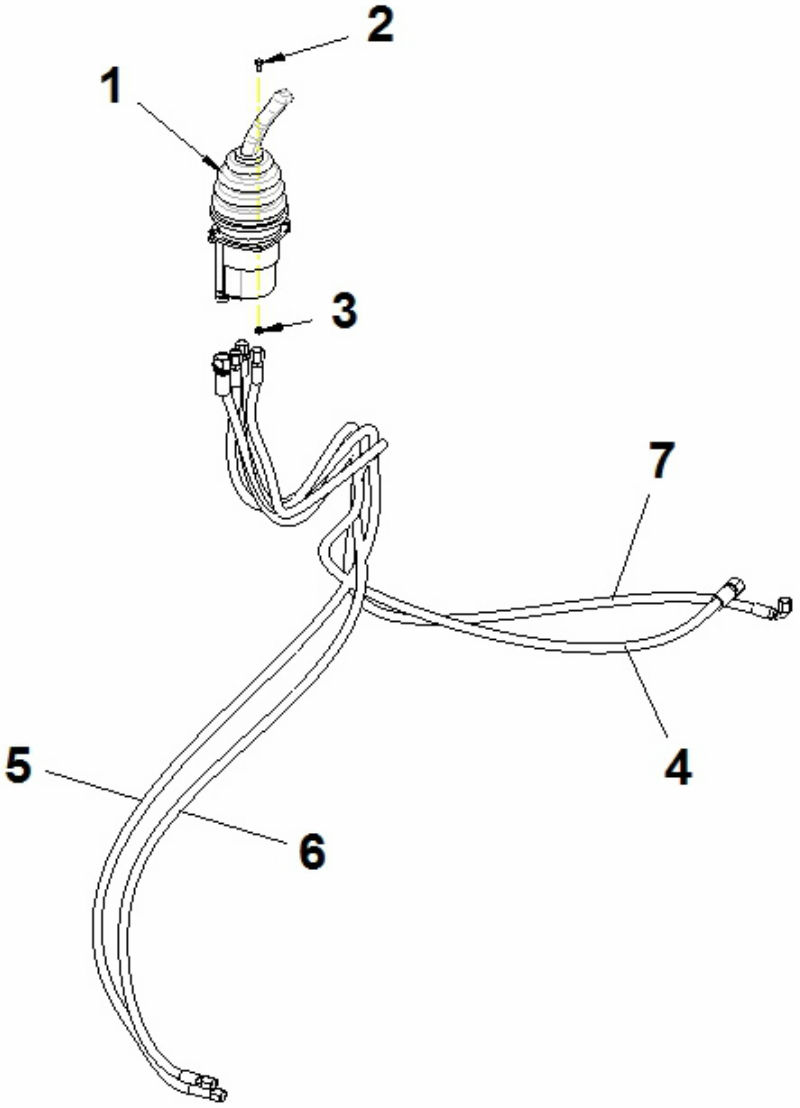

Item	Part No.	Name	Qty	L
1	4812101294	Joystick assy	1	
2	4700500012	Hex. screw	4	
3	4700570004	Hex. nut	4	
4	4812100590	Hydraulic hose	1	
5	4812101150	Hydraulic hose	1	
6	4812101151	Hydraulic hose	1	
7	4700484006	Hydraulic hose	1	

4812316155 2-Way Blade Joystick assy

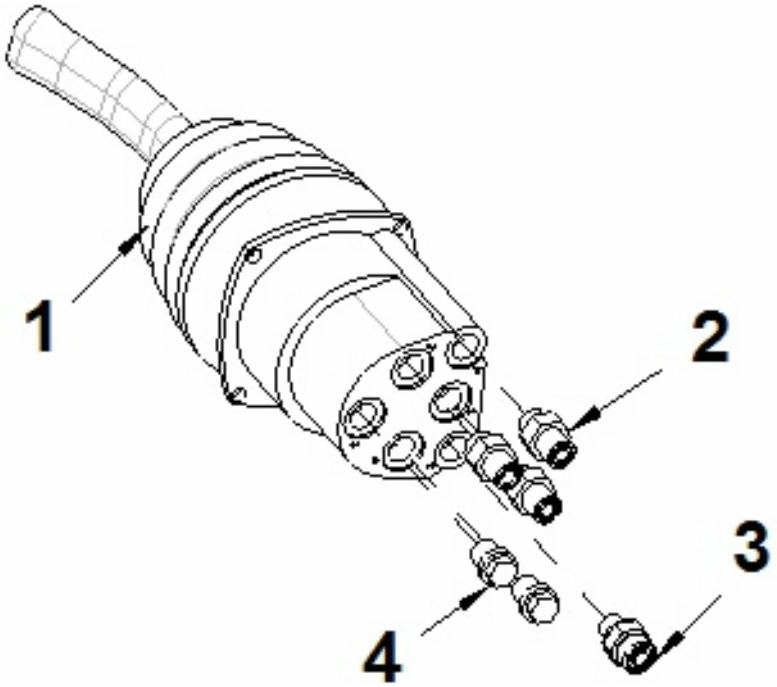

Item	Part No.	Name	Qty	L
1	4812100476	Joystick	1	
.1||1	4812317029	Replacement handle	1	
2	4700791541	Adapter	3	
3	4700792177	Straight connector	1	
4	4700332038	Plug	2	

4812101214 Night work lights 4812101214 Night work lights

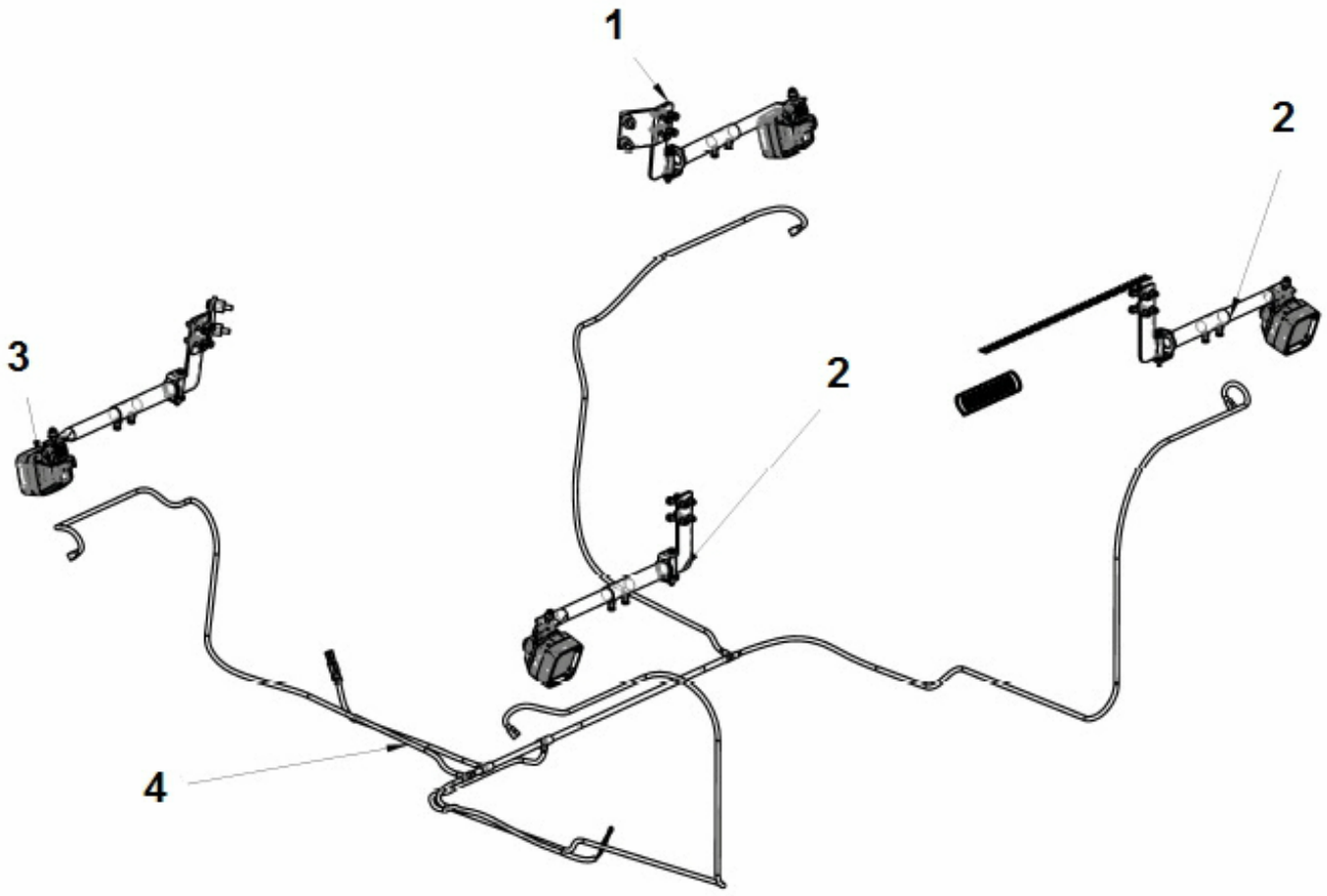

Item	Part No.	Name	Qty	L
1	4812110357	Bracket module	2	
2	4700397043	Bracket module	4	
3	4700392036	Working light module	4	
4	4812100845	Wiring Harness	1	
5	4700395352	Cable tie holder	20	
6	4700313041	Cable tie	10	

4812101214 Night work lights Bracket module

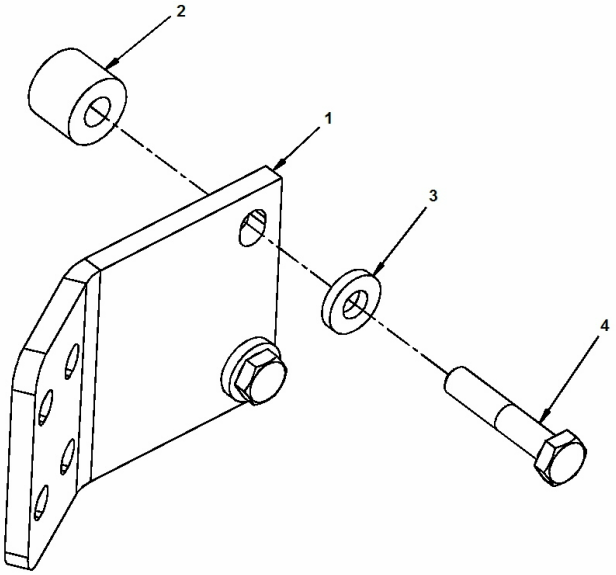

Item	Part No.	Name	Qty	L
1	4700395787	Holder plate	1	
2	4700397500	Spacer sleeve	2	
3	4700904557	Washer, 10.5x22x4 mm 300 HV	2	
4	4700500091	Screw	2	

4812101214 Night work lights Bracket module

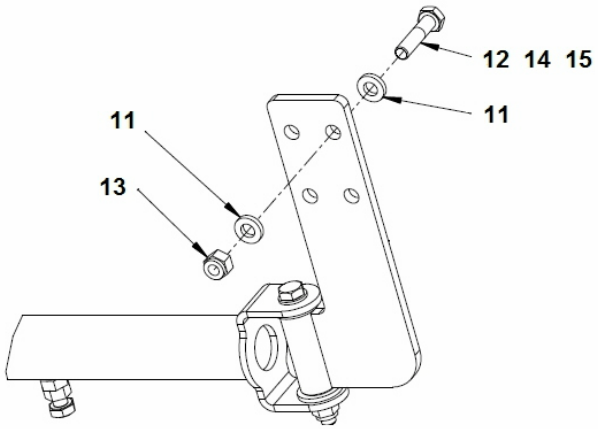

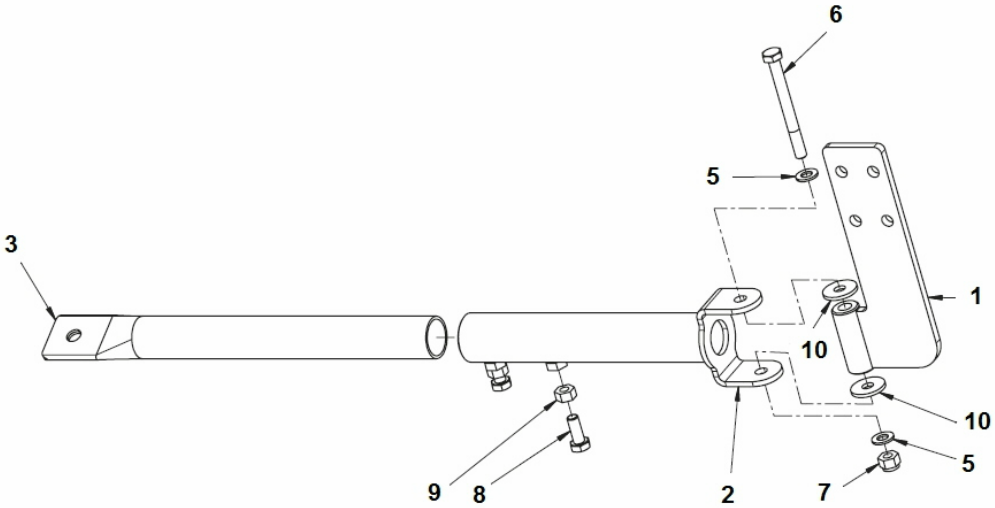

Item	Part No.	Name	Qty	L
1	4700397028	Bracket	1	
2	4700397029	Bracket	1	
3	4700397045	Bracket	1	
5	4700904229	Washer, 8.4x16x1.5 mm 300 HV	2	
6	4700500190	Screw	1	
7	4700586003	Hexagon lock nut M8	1	
8	4700500053	Hex. screw	2	
9	4700570005	Hex. nut	2	
10	4700903662	Washer	2	
11	4700904556	Steel plain washer	8	
12	4700500047	Hexagon head screw	4	
13	4700586003	Hexagon lock nut M8	4	
14	4700500024	Screw M8x45	4	
15	4700500025	Screw, M8 x 50 mm 8.8 A2K	4	

4812101214 Night work lights Working light module H3

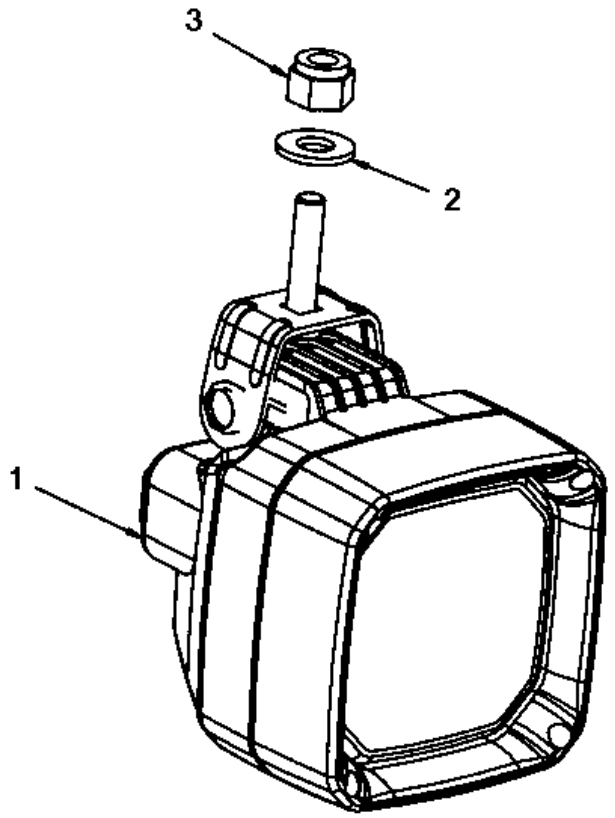

Item	Part No.	Name	Qty	L
1	4700392033	Working light	1	
.1	4700792352	Bulb	1	
2	4700904230	Washer	1	
3	4700586018	Lock nut	1	

4812101214 Night work lights Reading light module

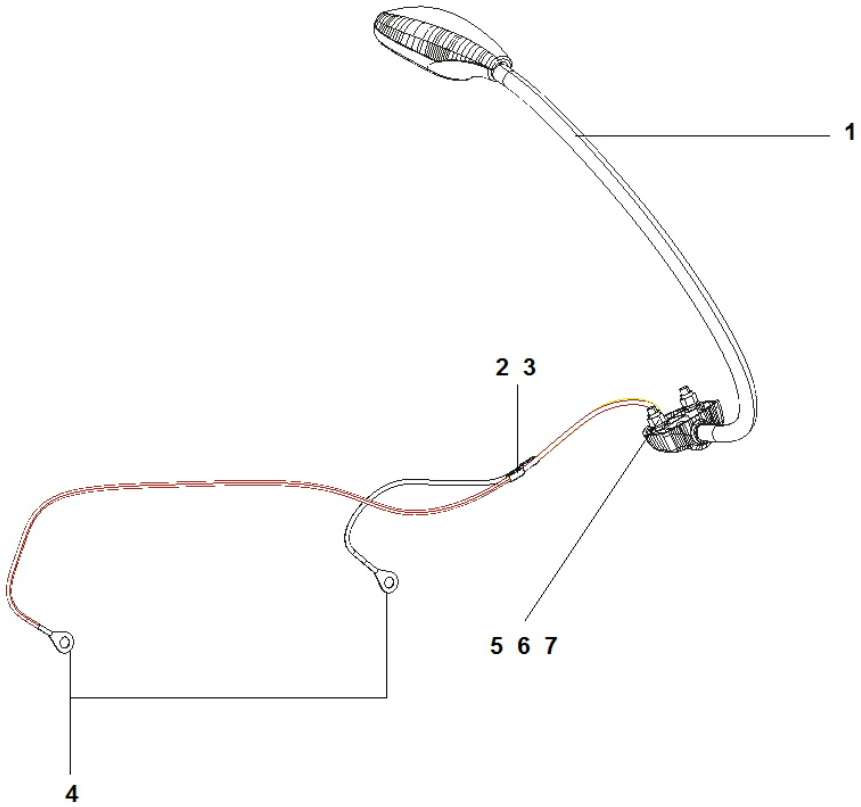

Item	Part No.	Name	Qty	L
1	4700397602	Reading light	1	
2	4700791989	Splice	2	
3	4700903997	Shrink hose	1XL	
4	4700791996	Ring terminal	2	
5	4700791421	Machine screw	2	
6	4700904281	Washer, 5,3x10x1 300HV	2	
7	4700586001	Lock nut	2	

4812101245 Air conditioning assy 4812101245 Air conditioning assy

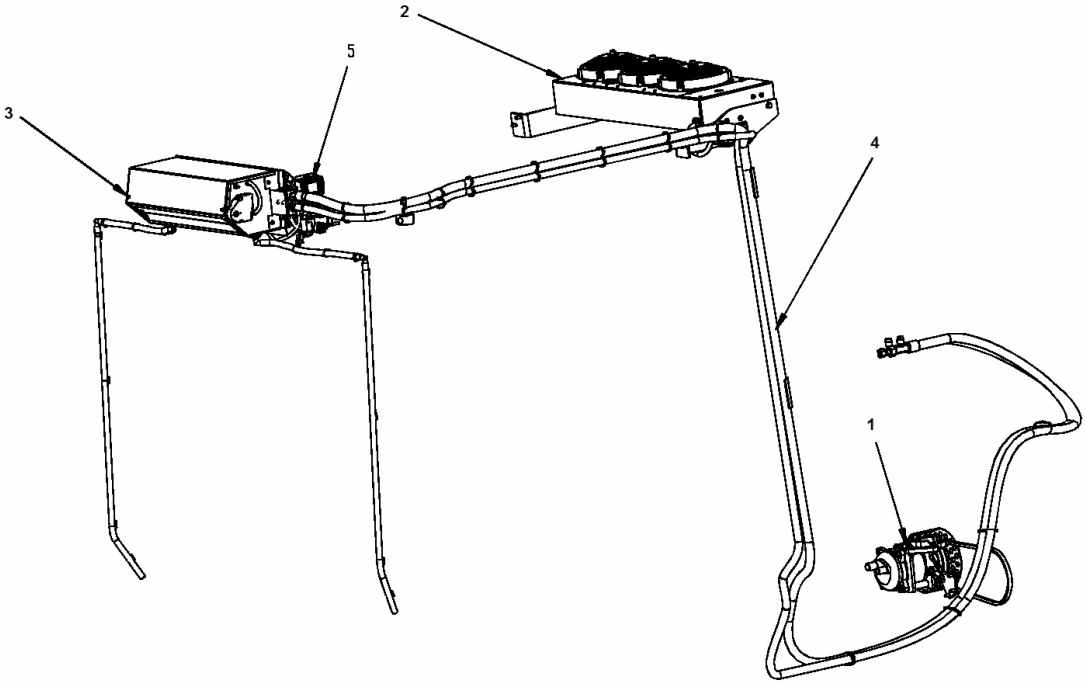

Item	Part No.	Name	Qty	L
1	-	Compressor module	1	
2	-	Condenser module	1	
3	-	Evaporator module	1	
4	-	Hose kit for AC	1	
5	-	ACC module	1	

Condensor Condensor module

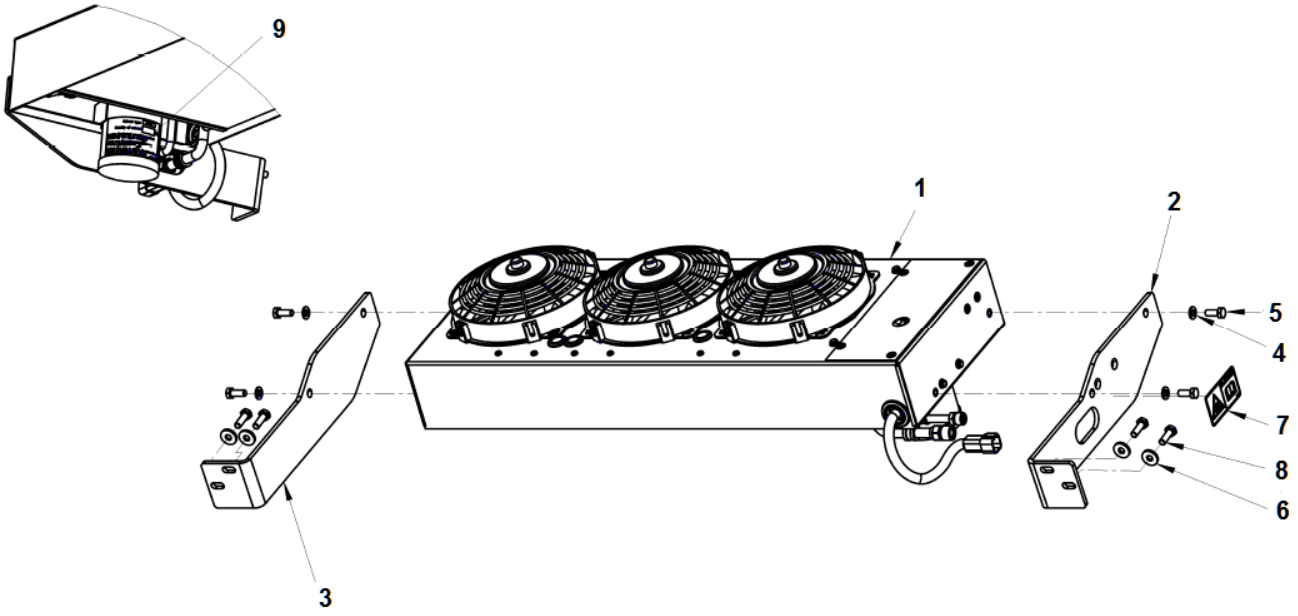

Item	Part No.	Name	Qty	L
1	4700393529	Condenser unit	1	
2	4700393222	Bracket	1	
3	4700393223	Bracket	1	
4	4700904229	Washer, 8.4x16x1.5 mm 300 HV	4	
5	4700500053	Hex. screw	4	
6	4700904640	Washer, 8.4x 2x3 mm 300 HV	4	
7	4700904165	Safety decal "Toxic gases"	1	
8	4700500021	Hex. screw	4	
9	4812121417	Decal	1	

Condensor Condensor

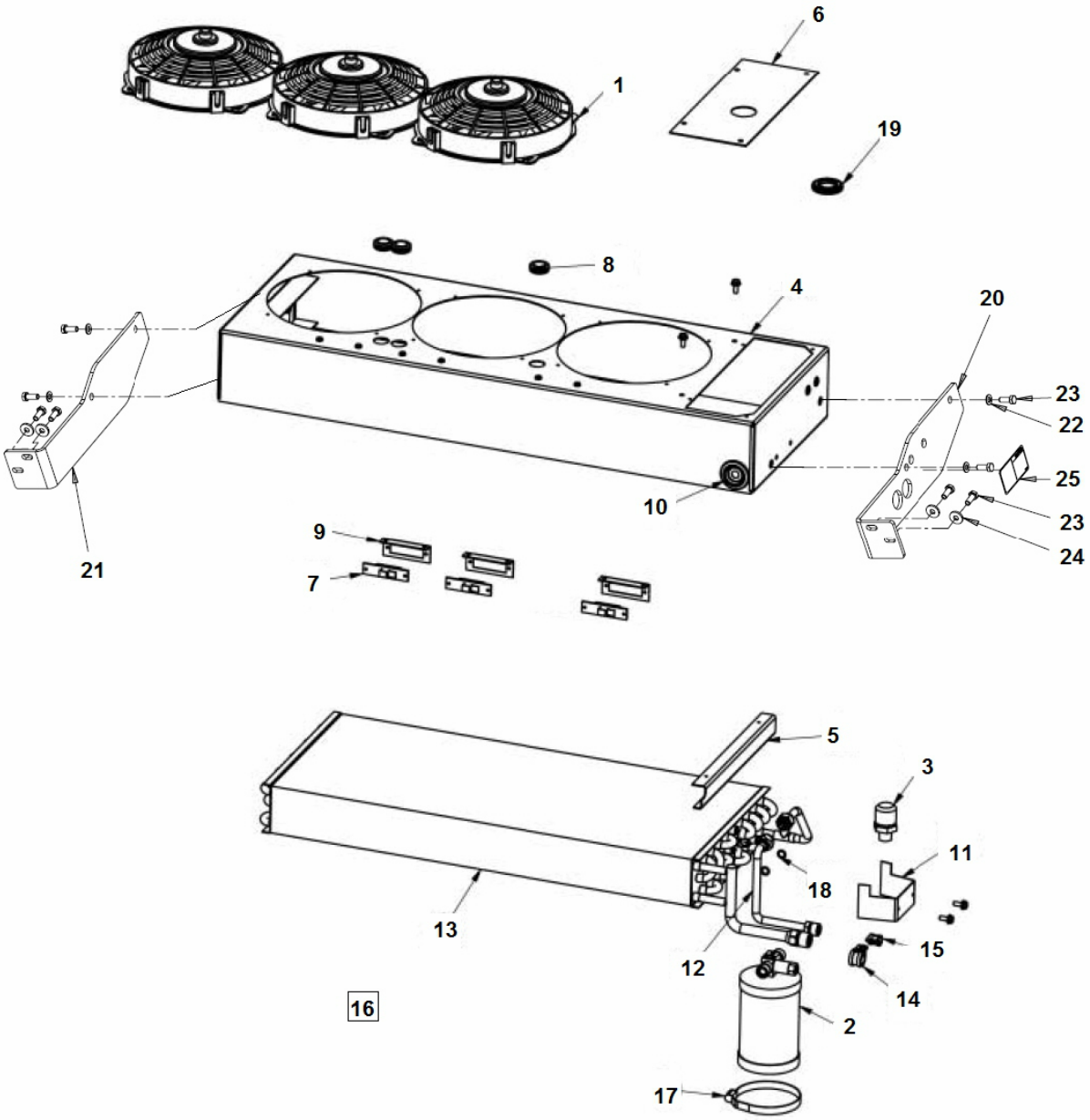

Item	Part No.	Name	Qty	L
1	4700950372	Fan	3	
2	4700950373	Dryer	1	
3	4700938605	Pressure switch	1	
4	-	Casing	1	
5	-	Bracket	1	
6	-	Cover	1	
7	4700938606	Resistor	3	
8	4700938609	Grommet	3	
9	4812155658	Resistor bracket	3	
10	-	Grommet	1	
11	-	Bracket	1	
12	-	Copper tube	1	
13	4700950374	Condensor Coil	1	
14	-	Clamp	1	
15	-	Clamp	1	
16	4700950375	Cable harness	1	
17	4700938789	Clamp	1	
18	-	O-RING	2	
19	-	Grommet	1	
20	4700393222	Bracket	1	
21	4700393223	Bracket	1	
22	4700904229	Washer, 8.4x16x1.5 mm 300 HV	4	
23	4700500053	Hex. screw	8	
24	4700904640	Washer, 8.4x 2x3 mm 300 HV	4	
25	4700904165	Safety decal "Toxic gases"	1	

Evaporator module Evaporator module

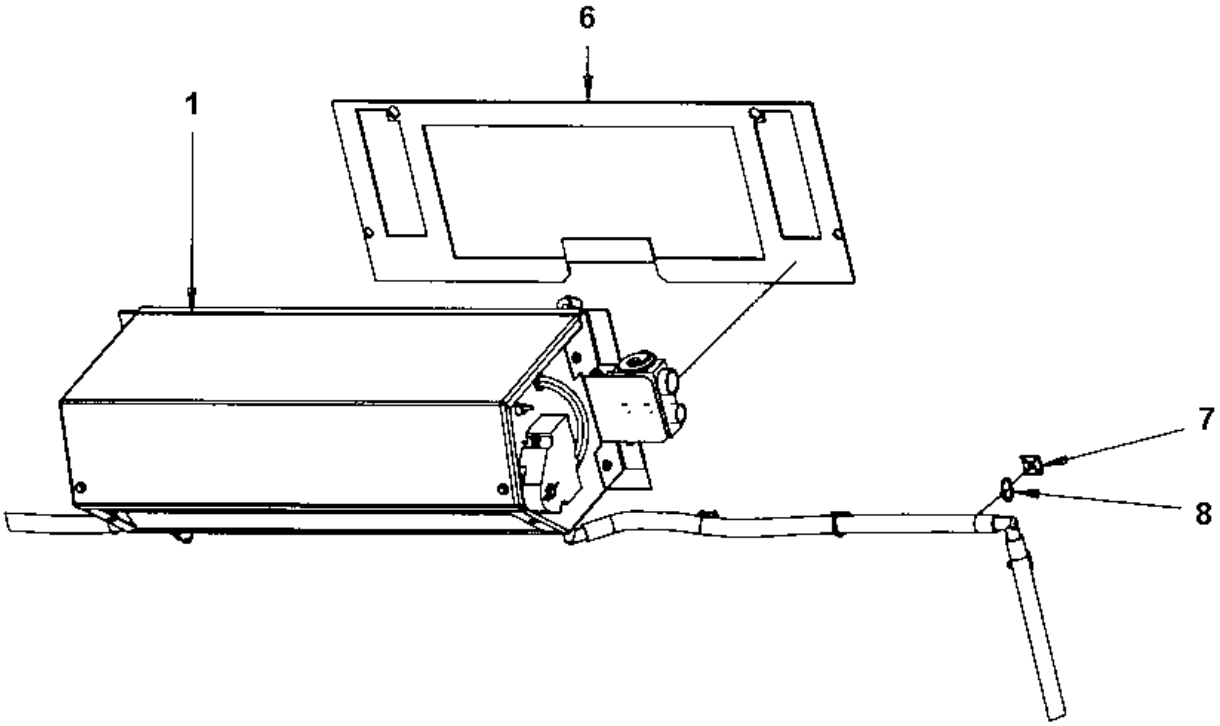

Item	Part No.	Name	Qty	L
1	4700393584	Evaporator unit	1	
6	4700297018	Rubber strip	1XL	A
7	4700395352	Cable tie holder	14	
8	4700313068	Clamp	14	

Comments for Page: Evaporator module

(L)OCAL REMARKS

A | en_US | L= 1,6 m

4700393584 Evaporator unit 4700393584 Evaporator unit

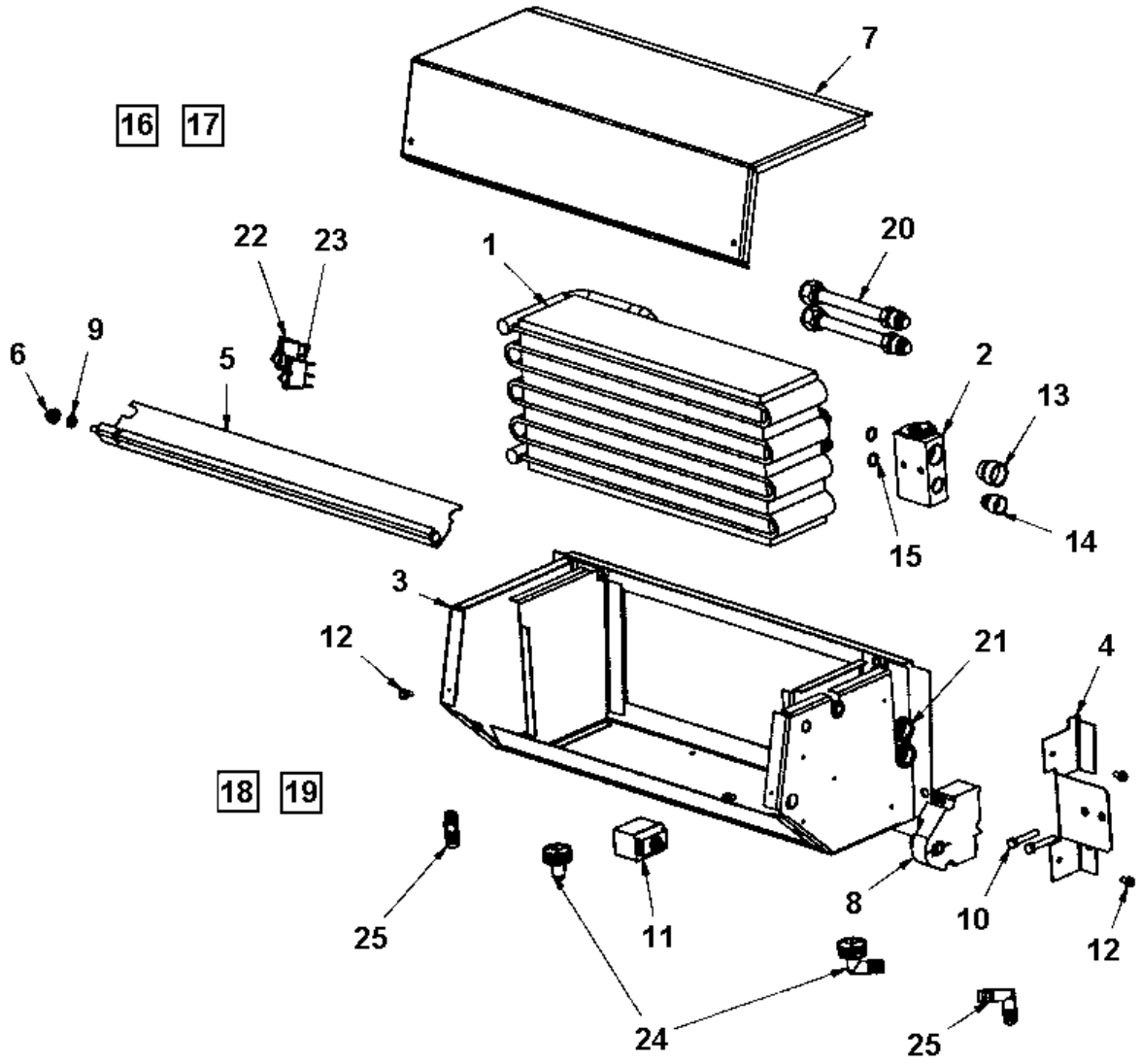

Item	Part No.	Name	Qty	L
1	4700950310	Evaporator coil	1	
2	4700950342	Block valve	1	
3	-	Casing	1	
4	-	Bracket	1	
5	-	Recirculation cover	1	
6	-	Bushing	1	
7	-	Cover	1	
8	4700950343	Actuator motor	1	
9	-	Washer	1	
10	-	Screw M6x35	2	
11	4700950344	Thermostat	1	
12	-	Screw M5x10	4	
13	-	Plug	1	
14	-	Plug	1	
15	4700950345	O-ring	2	
16	4700950346	Cable harness, recirc.	1	
17	4700950347	Cable harness, panel	1	
18	-	Drain hose	1	
19	-	Drain hose	1	
20	-	Connect tube	2	
21	-	Insulation tape	2	
22	4700950348	Switch, air condition	1	
23	4700950349	Switch, recirculation	1	
24	4700950350	Drain valve	2	
25	4700950380	Drain elbow	2	

4812100987 Compressor module 4812100987 Compressor module

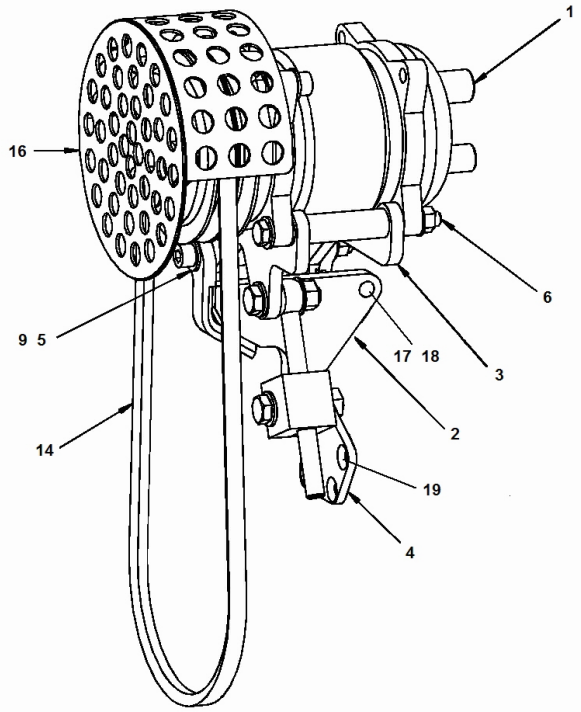

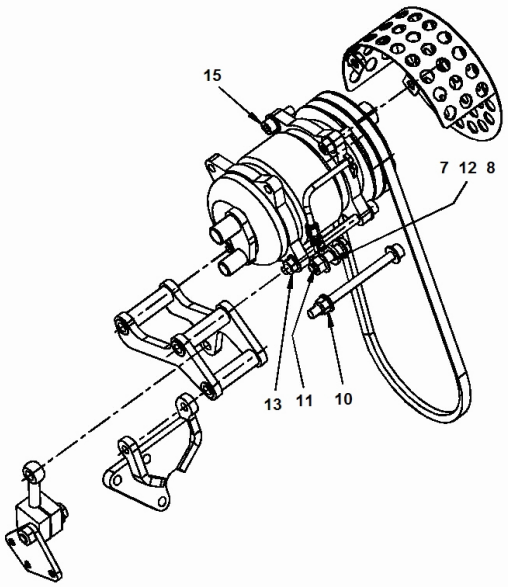

Item	Part No.	Name	Qty	L
1	4700396036	Compressor	1	
2	4812101074	Bracket	1	
3	4812101075	Bracket	1	
4	4812101076	Bracket module	1	
5	4700904230	Washer	6	
6	4700928664	Screw	1	
7	4700904703	Plain washer 13x24x4 mm	1	
8	4700904231	Steel plain washer, 13x24x2 mm 300 HV	1	
9	4700792797	Hexagon socket head cap screw m	2	
10	4700586018	Lock nut	1	
11	4700500056	Screw, M12x45 mm 8.8 A3K	1	
12	4700570104	Nut	1	
13	4700570103	Nut, M10 x 1.5 mm GEOMET®	2	
14	4700410012	V-belt	1	
15	4700508029	Cylinder screw	2	
16	4812101078	Belt guard	1	
17	4700904230	Washer	3	
18	4700500027	Screw M10-1,55x22 8.8	3	
19	4700513003	Screw	3	

4812100987 Compressor module 4812101076 Bracket module

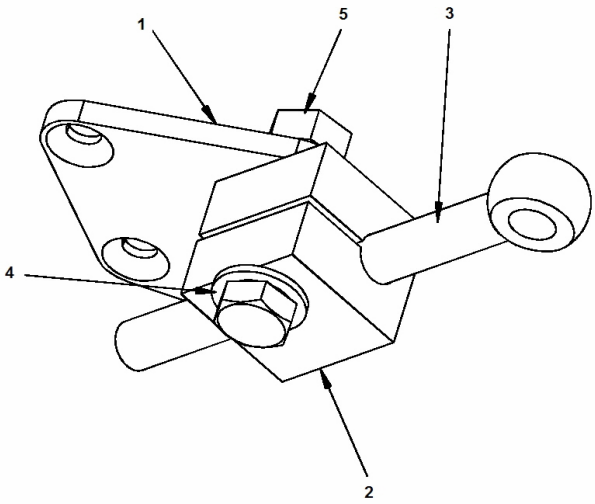

Item	Part No.	Name	Qty	L
1	4812101077	Bracket	1	
2	4812101079	Bracket	1	
3	4812101081	Rod	1	
4	4700904231	Steel plain washer, 13x24x2 mm 300 HV	1	
5	4700500111	Hex. screw	1	

ACC module ACC module

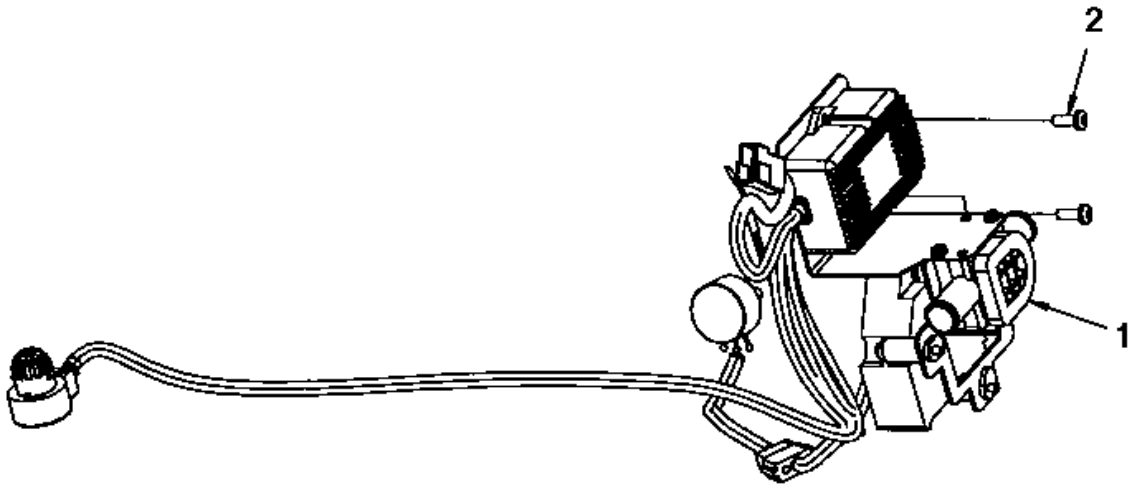

Item	Part No.	Name	Qty	L
1	-	ACC controls	1	
2	4700792187	Thread forming screw M5x14	2	

ACC module ACC controls

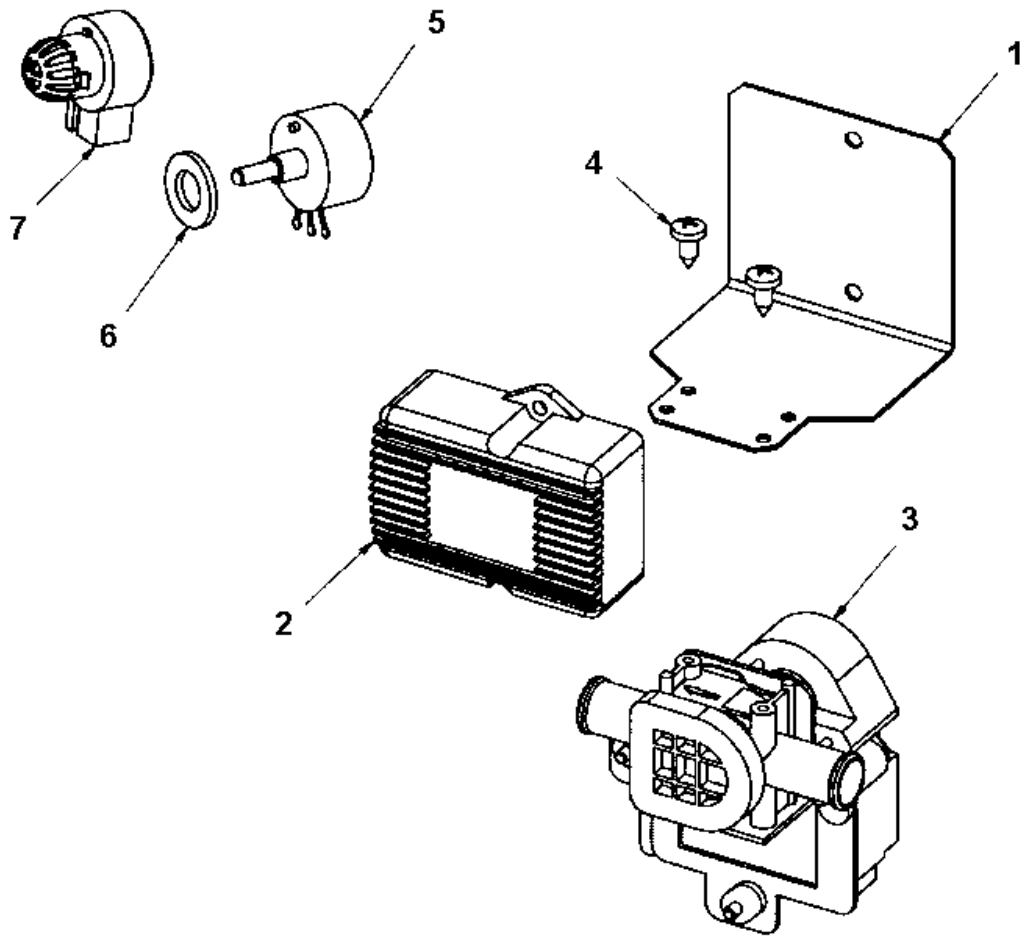

Item	Part No.	Name	Qty	L
1	-	Bracket	1	
2	4700950369	ATM unit	1	
3	4700950370	Heater valve	1	
4	-	Screw	2	
5	4700950371	Potentiometer	1	
6	-	Washer	1	
7	4700938624	Sensor, Inner temp	1	

4812101199 Drive lights kit 4812101199 Drive lights kit

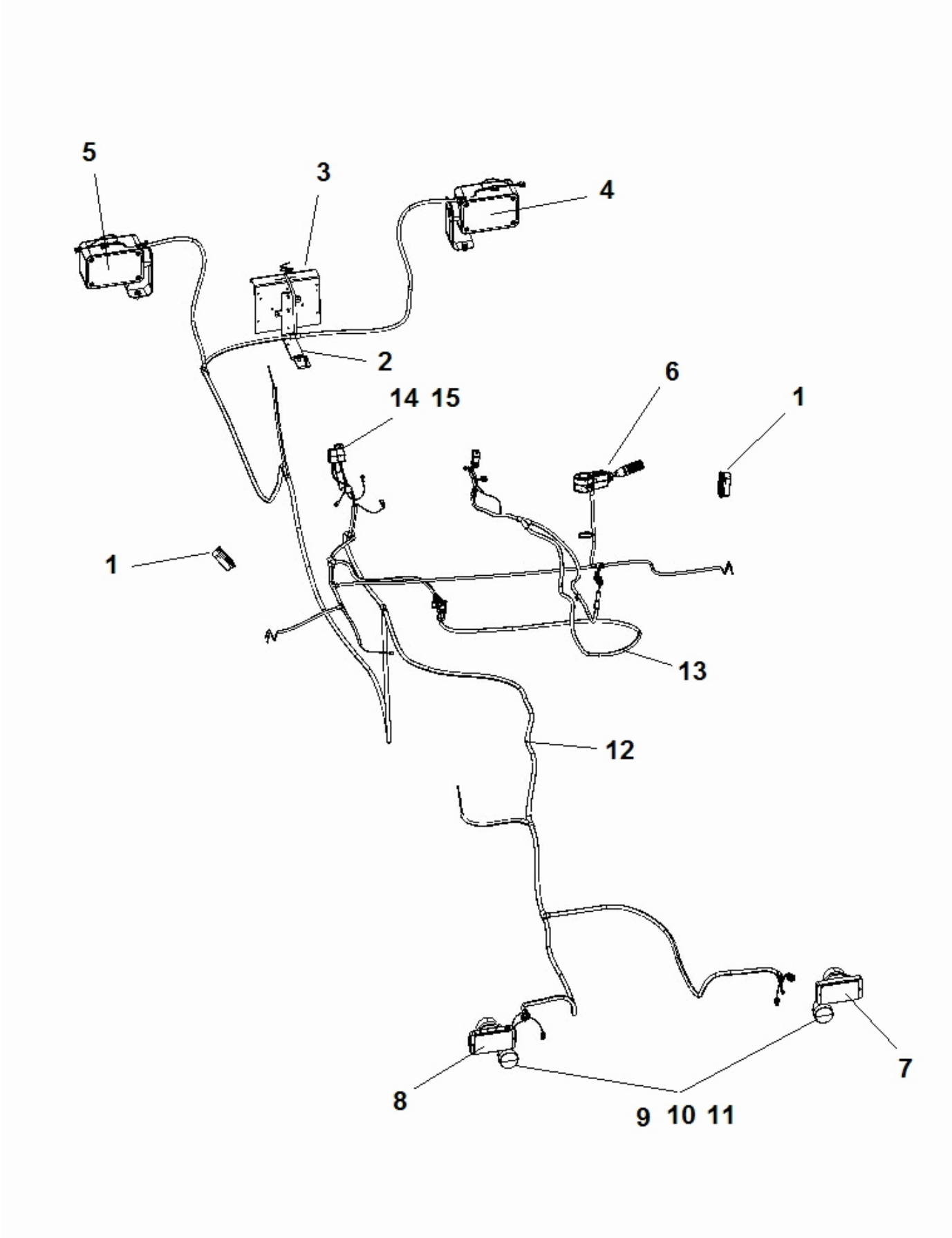

Item	Part No.	Name	Qty	L
1	4812100101	Direction indicator module	2	
2	4812110250	Bracket module	1	
3		Reg. plate light module	1	
4	4812101207	Rear drive lights module	1	
5	4812101210	Rear drive lights right module	1	
6	4700392449	Steering column switch	1	
7	4700792059	Headlight left hand asym. with parking light	1	
8	4700791951	Headlight right hand asym. with parking light	1	
9	4700792521	Direction indicator	2	
10	4700792353	Bulb 24V 75/70W H4	2	
11	4700792350	Bulb 24V 2W	2	
12	4812100842	Wiring Harness Kit	1	
13	4700392279	Harness and switch module	1	
14	4700792422	Relay 24V 20A	1	
15	4811000163	Flash relay	1	

4812101199 Drive lights kit 4812100842 Wiring Harness Kit

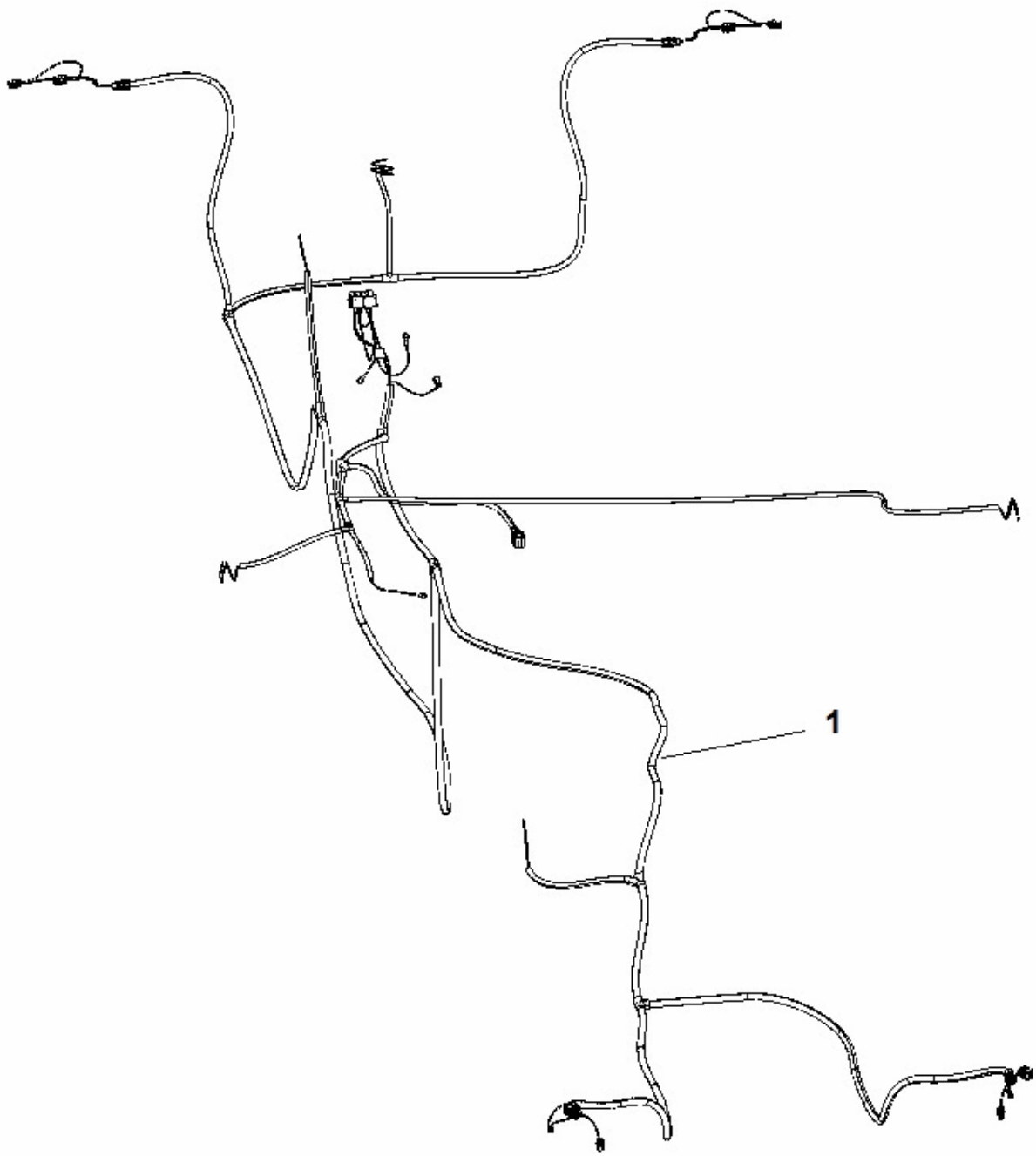

Item	Part No.	Name	Qty	L
1	4812100843	Wiring Harness	1	
2	4700313041	Cable tie	10	
3	4700395352	Cable tie holder	20	

4812101199 Drive lights kit 4700392449 Steering column switch

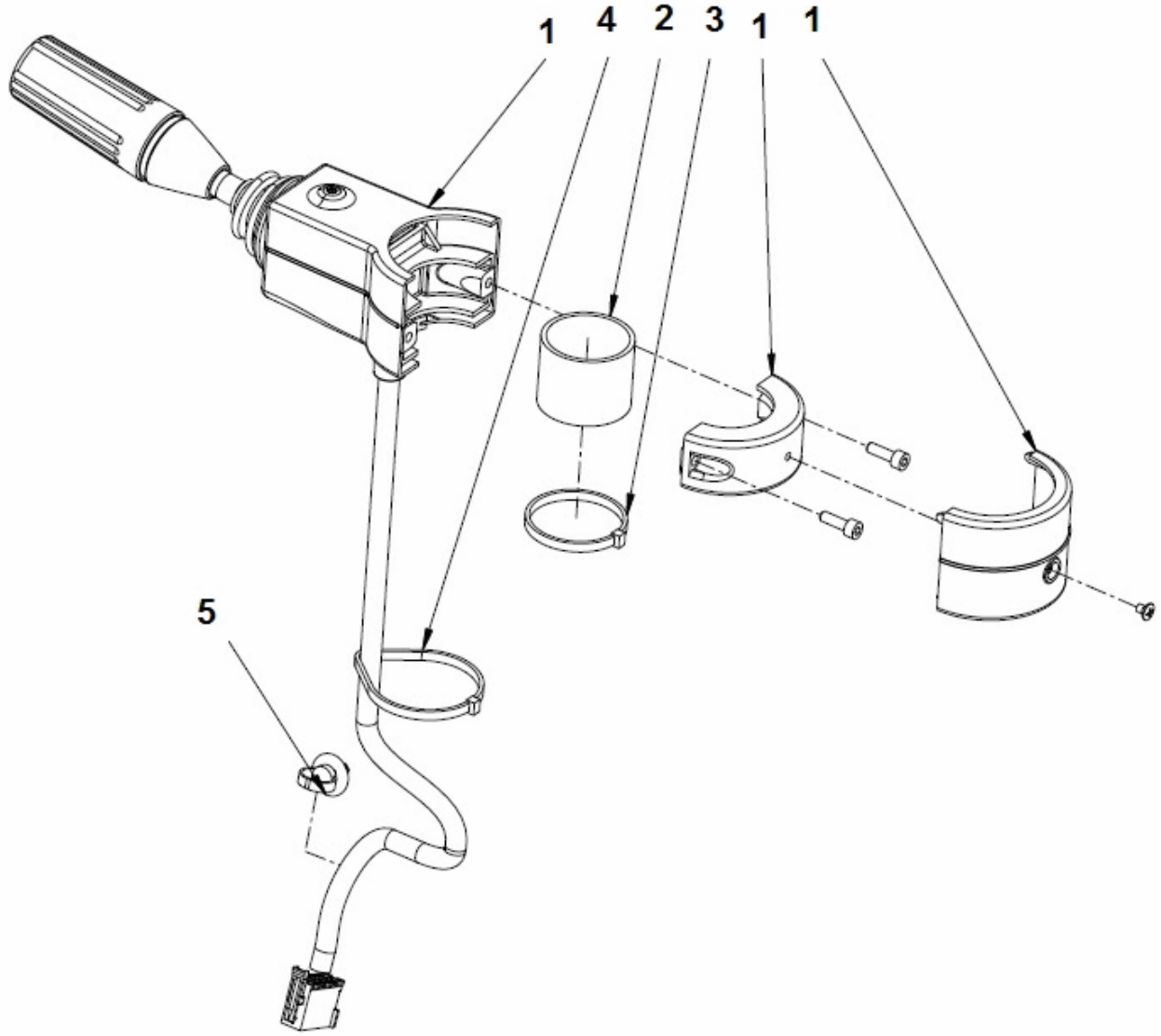

Item	Part No.	Name	Qty	L
1	4700392450	Steering column switch	1	
2	4700392451	Rubber cloth	1	
3	4700313041	Cable tie	1	
4	4700792609	Cable ties	1	
5	4700792441	Cable tie with holder	1	

4812101199 Drive lights kit 4812101210 Rear drive lights right module

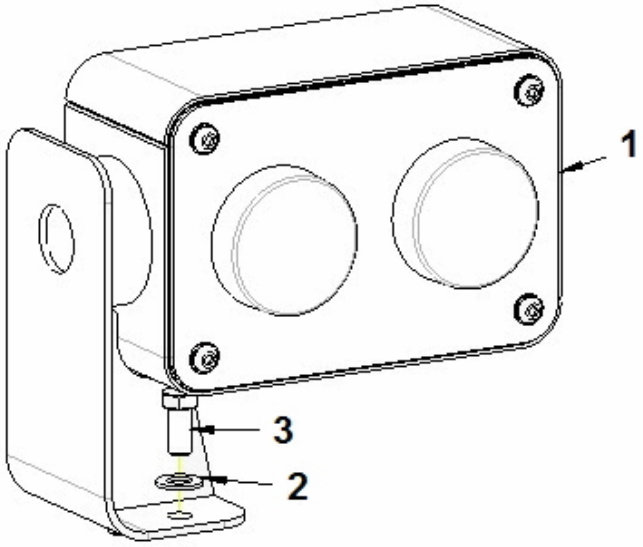

Item	Part No.	Name	Qty	L
1	4812101211	Rear drive lights	1	
2	4700904231	Steel plain washer, 13x24x2 mm 300 HV	2	
3	4700500051	Hex. screw	2	

4812101199 Drive lights kit 4812101207 Rear drive lights module

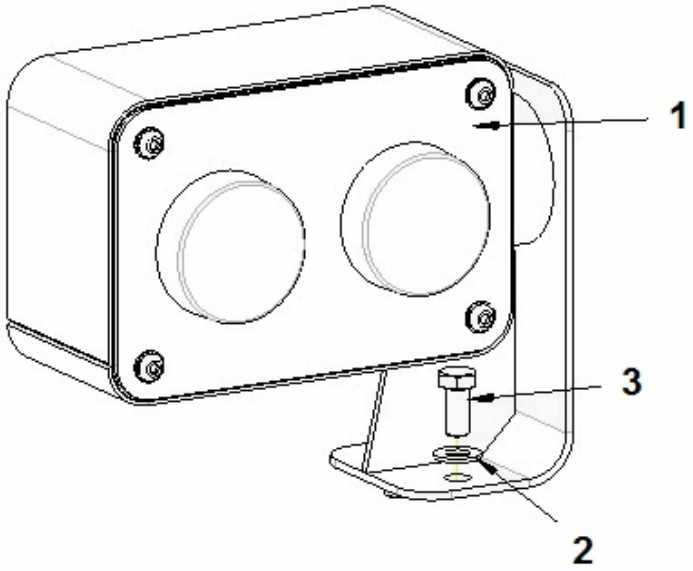

Item	Part No.	Name	Qty	L
1	4812101208	Rear drive light assembly	1	
2	4700904231	Steel plain washer, 13x24x2 mm 300 HV	2	
3	4700500051	Hex. screw	2	

4812101199 Drive lights kit 4700392375 Reg. plate light module

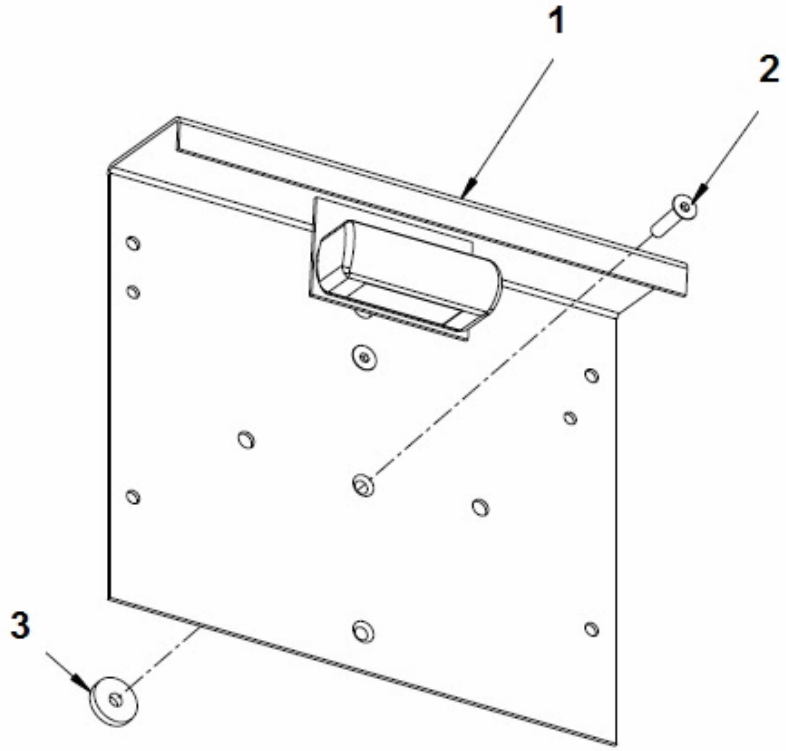

Item	Part No.	Name	Qty	L
1		Registration-plate light	1	
2	4700928784	Screw	2	
3	4700904735	Steel plain washer	2	

4812101199 Drive lights kit 4812110250 Bracket module

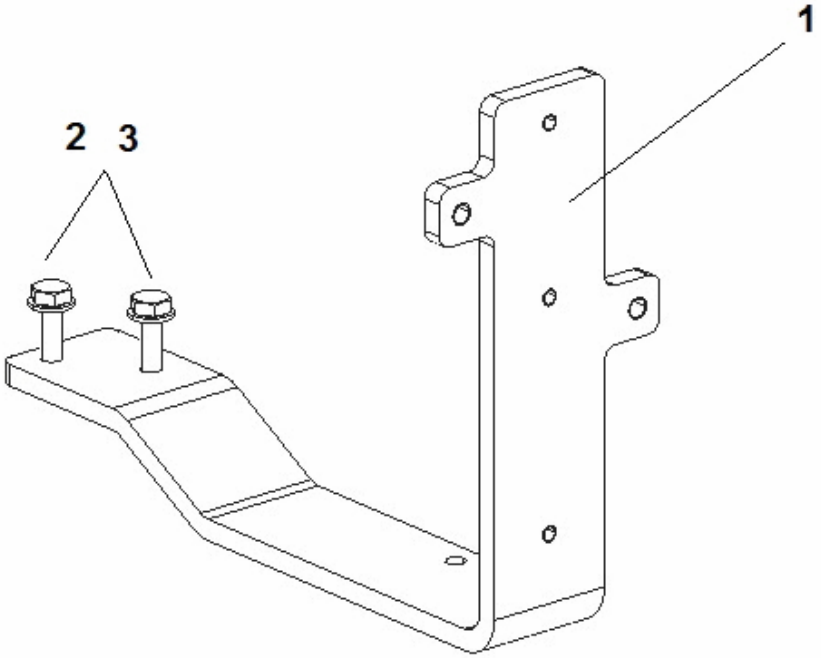

Item	Part No.	Name	Qty	L
1	4700397260	Bracket	1	
2	4700904229	Washer, 8.4x16x1.5 mm 300 HV	2	
3	4700500230	Hex. screw	2	

4812101199 Drive lights kit 4812100101 Direction indicator module

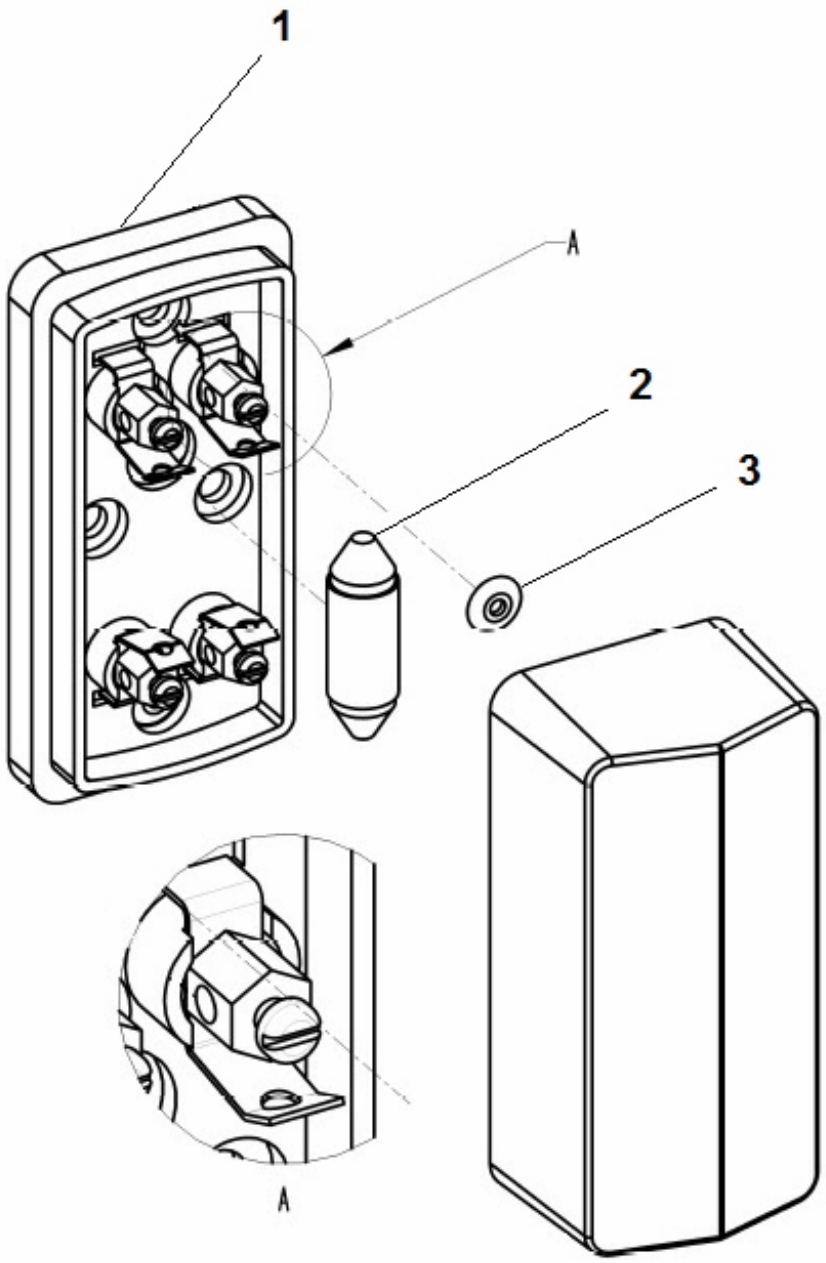

Item	Part No.	Name	Qty	L
1	4700902064	Direction lights	1	
2	4700792354	Bulb 24V 5W	1	
3	4700904012	Rivet	1	

4700392279 Harness and switch module 4700392279 Harness and switch module

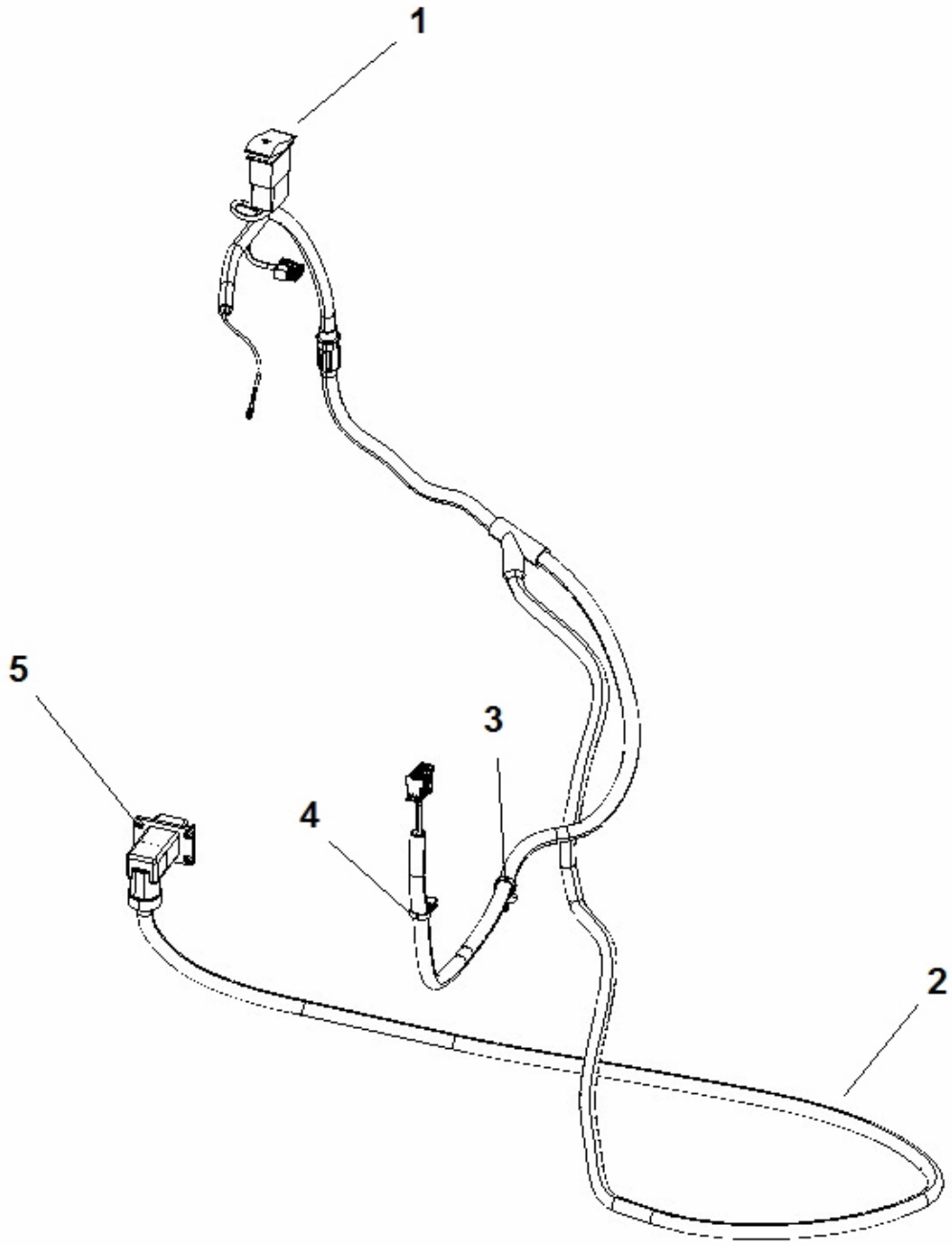

Item	Part No.	Name	Qty	L
1	4700792398	Switch	1	
2	4812110898	Cable harness	1	
3	4700792441	Cable tie with holder	1	
4	4700792537	Cable tie with holder	1	
5	4700791709	Blind rivet	4	

4700392279 Harness and switch module 4812110898 Wiring harness steering column

1

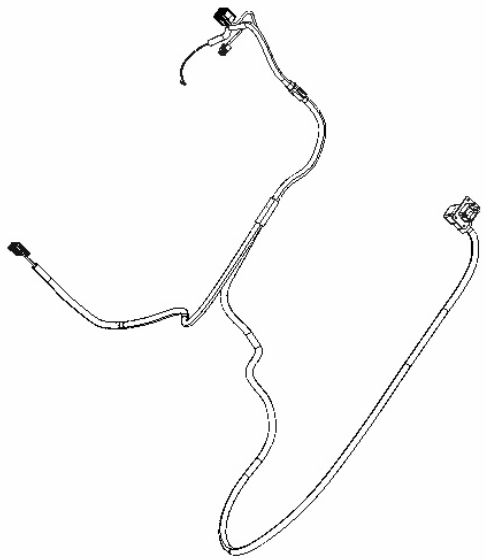

Item	Part No.	Name	Qty	L
1	4812110898	Cable harness	1	

Any unauthorized use or copying of the contents or any part thereof is prohibited. This applies in particular to trademarks, model denominations, part numbers, and drawings.