DYNAPAC
Part of the Atlas Copco Group

Instruction manual

ICC122-2EN2.pdf
Operation & Maintenance

Vibratory roller
CC122

Engine
Deutz D2011 L02I

Serial number
***60131292*, *60131307* -**
10000307x0A000001 -

Translation of original instructions

Subject to changes
Printed in Sweden

Table of Contents

Introduction 1
The machine 1
Intended use 1
Warning symbols 1
Safety information 1
General 2
CE marking and Declaration of conformity 3
Safety - General instructions 5
Safety - when operating 7
Driving near edges 7
Slopes 8
Special instructions 9
Standard lubricants and other recommended oils and fluids 9
Higher ambient temperatures, above +40°C (104°F) 9
Lower ambient temperature - Freeze risk 9
Temperatures 9
High pressure cleaning 9
Fire fighting 10
Roll Over Protective Structure (ROPS) 10
Battery handling 10
Jump starting 11
Technical specifications 13
Vibrations - Operator station 13
Noise level 13
Dimensions, side view 14
Dimensions, top view 15
Weights and volumes 16
Working capacity 16
General 16
Tightening torque 17

ROPS - bolts 18
Hydraulic system 18
Machine description 19
Identification 19
Product identification number on the frame 19
Machine plate 20
Explanation of 17PIN serial number 20
Engine plates 21
Location - decals 22
Safety decals 23
Info decals 24
Instruments/Controls 25
Locations - Instruments and controls 25
Function descriptions 26
Electrical system 28
Fuses 28
Operation 29
Before starting 29
Master switch - Switching on 29
Driver seat - Adjustment 29
Comfort seat - Adjustment 30
Instruments and lamps - Checking 30
Parking brake - Check 30
Interlock 31
Operator position 31
Starting 32
Starting the engine 32
Driving 33
Operating the roller 33
Interlock/Emergency stop/Parking brake - Check 34

Vibration 35
Manual/Automatic vibration 35
Braking 36
Emergency braking 36
Normal braking 36
Switching off 37
Parking 37
Chocking the drums 37
Battery disconnector 37
Long-term parking 39
Engine 39
Battery 39
Air cleaner, exhaust pipe 39
Fuel tank 39
Hydraulic reservoir 39
Water tank 39
Steering cylinder, hinges, etc. 40
Hoods, tarpaulin 40
Miscellaneous 41
Lifting 41
Locking the articulation 41
Lifting the roller 41
Unlocking the articulation 42
Towing/Recovering 43
Releasing the brake (Optional) 43
Towing the roller 44
Roller prepared for transport 44
Retractable ROPS (Optional) 45
Operating instructions - Summary 47
Preventive maintenance 49

Acceptance and delivery inspection 49
Warranty 49
Maintenance - Lubricants and symbols 51
Maintenance symbols 52
Maintenance - Maintenance schedule 53
Service and maintenance points 53
General 54
Every 10 hours of operation (Daily) 54
After the FIRST 50 hours of operation 54
Every 50 hours of operation (Weekly) 55
Every 250 hours of operation (Monthly) 55
Every 500 hours of operation (Every three months) 55
Every 1000 hours of operation (Every six months) 56
Every 2000 hours of operation (Yearly) 56
Maintenance - 10h 57
Hydraulic reservoir, Level check - Filling 57
Air circulation - Check 58
Fuel tank - Filling 59
Water tank - Filling 59
Sprinkler system/Drum
Checking - Cleaning 60
Scrapers, fixed
Checking - Setting 61
Scrapers, spring-action (Optional)
Checking - Adjustment 62
Brakes - Check 62
Maintenance - 50h 63
Air cleaner
Check - Replacement of main filter 63
Air filter indicator - Resetting 64
Backup filter - Change 64

Air cleaner
- Cleaning 64
Steering cylinder and steering joint - Lubrication 65
Maintenance - 250h 67
Hydraulic fluid cooler
Checking - Cleaning 67
Battery - Checking electrolyte level 68
Battery (maintenance-free) 68
Maintenance - 500h 69
Drum - oil level
Inspection - filling 69
Rubber elements and attachment screws
Check 70
Hydraulic reservoir cap - Check 70
Controls - Lubrication 70
Diesel engine - Oil change 71
Oil filter - Replacement 72
Maintenance - 1000h 73
Replacing the hydraulic oil filter 73
Hydraulic fluid reservoir - Draining 75
Replacing the fuel filter 75
Replacing the pre-filter 76
Maintenance - 2000h 77
Hydraulic tank - Changing the fluid 77
Drum - Oil change 78
Water tank - Draining 78
Water pump - Draining 79
Water tank - Cleaning 79
Fuel tank - Cleaning 80
Steering joint - Check 80

Introduction

The machine

Dynapac CC122 is a self-propelled vibratory tandem roller in the 2 metric tonnes class featuring 1200 mm wide drums. The machine is equipped with drive, brakes, and vibration on both drums.

CC122 is also available as a Combi, with four rubber wheels at the rear replacing the steel drum.

Intended use

CC122 has primarily been designed for the compaction of asphalt, but has excellent compaction capacity for reinforcement layers and bearing courses. The roller is mainly intended for smaller construction works, such as compacting asphalt on minor roads, sidewalks, cycle ways and garage driveways.

Warning symbols

WARNING ! Marks a danger or a hazardous procedure that can result in life threatening or serious injury if the warning is ignored.

CAUTION ! Marks a danger or hazardous procedure that can result in damage to the machine or property if the warning is ignored.

Safety information

It is recommended to at least train operators in handling and daily maintenance of the machine in accordance with the instruction manual. Passengers are not allowed on the machine, and you must sit in the seat when operating the machine.

The safety manual supplied with the machine must be read by all roller operators. Always follow the safety instructions. Do not remove the manual from the machine.

We recommend that the operator reads the safety instructions in this manual carefully. Always follow the safety instructions. Ensure that this manual is always easily accessible.

Read the entire manual before starting the machine and before carrying out any maintenance.

Replace immediately the instruction manuals if lost, damaged or unreadable.

Ensure good ventilation (extraction of air by fan) where the engine is run indoors.

CALIFORNIA

Proposition 65 Warning

Diesel engine exhaust and some of its constituents are known to the State of California to cause cancer, birth defects, and other reproductive harm.

General

This manual contains instructions for machine operation and maintenance.

The machine must be correctly maintained for maximal performance.

The machine should be kept clean so that any leakages, loose bolts and loose connections are discovered at as early a point in time as possible.

Do not spray with high-pressure cleaner directly onto gaskets and bearing spacings in steering hitch and drum.

Inspect the machine every day, before starting. Inspect the entire machine so that any leakages or other faults are detected.

Check the ground under the machine. Leakages are more easily detected on the ground than on the machine itself.

THINK ENVIRONMENT ! Do not release oil, fuel and other environmentally hazardous substances into the environment. Always send used filters, drain oil and fuel remnants to environmentally correct disposal.

This manual contains instructions for periodic maintenance normally carried out by the operator.

Additional instructions for the engine can be found in the manufactuer's engine manual.

CE marking and Declaration of conformity

(Applies to machines marketed in EU/EEC)

This machine is CE marked. This shows that on delivery it complies with the basic health and safety directives applicable for the machine in accordance with machinery directive 2006/42/EC and that it also complies with other directives applicable for this machine.

A "Declaration of conformity" is supplied with this machine, which specifies the applicable directives and supplements, as well as the harmonized standards and other regulations that are applied.

Safety - General instructions

(Also read the safety manual)

1. **The operator must be familiar with the contents of the OPERATION section before starting the roller.**
2. **Ensure that all instructions in the MAINTENANCE section are followed.**
3. **Only trained and/or experienced operators are to operate the roller. Passengers are not permitted on the roller. Remain seated at all times when operating the roller.**
4. **Never use the roller if it is in need of adjustment or repair.**
5. **Only mount and dismount the roller when it is stationary. Use the intended grips and rails. Always use the three-point grip (both feet and one hand, or one foot and both hands) when mounting or dismounting the machine. Never jump down from the machine.**
6. **The ROPS (Roll Over Protective Structure) should always be used when the machine is operated on unsafe ground.**
7. **Drive slowly in sharp bends.**
8. **Avoid driving across slopes. Drive straight up or straight down the slope.**
9. **When driving close to edges, ditches or holes, make sure that at least 2/3 of the drum width is on previously compacted material (solid surface).**
10. **Make sure that there are no obstacles in the direction of travel, on the ground, in front of or behind the roller, or overhead.**
11. **Drive particularly carefully on uneven ground.**
12. **Use the safety equipment provided. The seat belt must be worn on machines fitted with ROPS.**
13. **Keep the roller clean. Clean any dirt or grease that accumulates on the operator platform immediately. Keep all signs and decals clean and legible.**
14. **Safety measures before refueling:**
    - Shut off the engine
    - Do not smoke
    - No naked flame in the vicinity of the machine
    - Ground the filling device nozzle to the tank to avoid sparks
15. **Before repairs or service:**
    - Chock the drums/wheels and under the strike-off blade.
    - Lock the articulation if necessary

16. **Hearing protection is recommended if the noise level exceeds 85 dB(A). The noise level can vary depending on the equipment on the machine and the surface the machine is being used on.**

17. **Do not make any changes or modifications to the roller that could affect safety. Changes are only to be made after written approval has been given by Dynapac.**

18. **Avoid using the roller before the hydraulic fluid has reached its normal working temperature. Braking distances can be longer than normal when the fluid is cold. See instructions in the STOP section.**

19. **For your own protection always wear:**
    - helmet
    - working boots with steel toecaps
    - ear protectors
    - reflecting clothing/high visibility jacket
    - working gloves

Safety - when operating

Prevent persons from entering or remaining in the danger area, i.e. a distance of at least 7 m (23 ft) in all directions from operating machines. The operator may allow a person to remain in the danger area, but should then observe caution and operate the machine only when the person is visible or has given clear indications of where he or she is.

Driving near edges

When driving near an edge, minimum 2/3 of the drum width must be on solid ground.

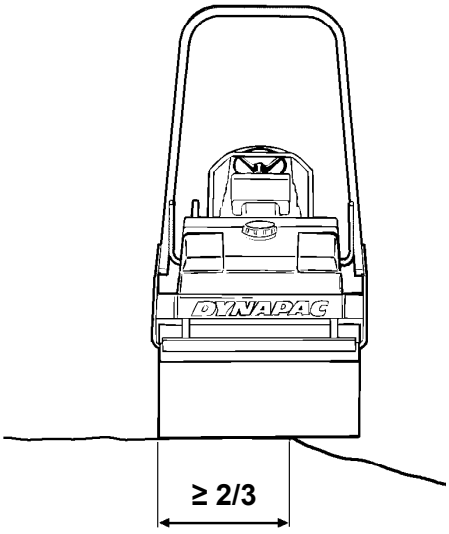

Fig. Position of drum when driving near an edge

Keep in mind that the machine's center of gravity moves outwards when steering. For example, the center of gravity moves to the right when you steer to the left.

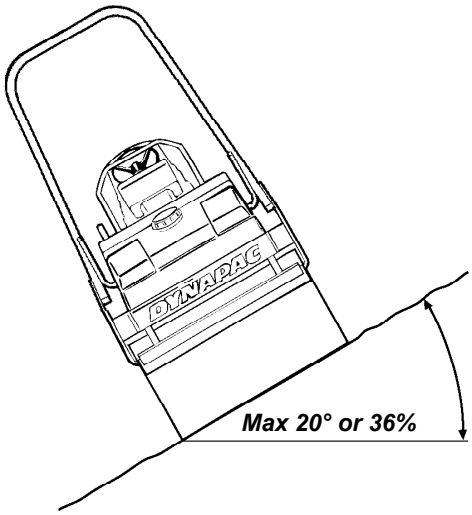

Fig. Operating on slopes

Slopes

This angle has been measured on a hard, flat surface with the machine stationary.

The steering angle was zero, the vibration was switched OFF and all tanks were full.

Always take into consideration that loose ground, steering the machine, vibration on, machine speed across the ground and raising the center of gravity can all cause the machine to topple at smaller slope angles than those specified here.

It is recommended that ROPS (Roll Over Protective Structure) or a ROPS approved cab, is always used when driving on slopes or unsafe ground.

Where possible, avoid driving across slopes. Drive instead straight up and down sloping ground.

Special instructions

Standard lubricants and other recommended oils and fluids

Before leaving the factory, the systems and components are filled with the oils and fluids specified in the lubricant specification. These are suitable for ambient temperatures in the range -15°C to +40°C (5°F - 104°F).

The maximum temperature for biological hydraulic fluid is +35°C (95°F).

Higher ambient temperatures, above +40°C (104°F)

For operation of the machine at higher ambient temperatures, however maximum +50°C (122°F), the following recommendations apply:

The diesel engine can be run at this temperature using normal oil. However, the following fluids must be used for other components:

Hydraulic system - mineral oil Shell Tellus T100 or similar.

Lower ambient temperature - Freeze risk

Make sure that the watering system is empty/drained of water (sprinkler, hoses, tank/s) or that anti-freeze has been added, to prevent the system freezing.

Temperatures

The temperature limits apply to standard versions of rollers.

Rollers equipped with additional equipment, such as noise suppression, may need to be more carefully monitored in the higher temperature ranges.

High pressure cleaning

Do not spray water directly onto electrical components or the instrument panels.

Place a plastic bag over the fuel filler cap and secure with a rubber band. This is to avoid high pressure water entering the vent hole in the filler cap. This could cause malfunctions, such as the blocking of filters.

Do not spray with high-pressure cleaner directly onto gaskets and bearing spacings in steering hitch and drum.

Never aim the water jet directly at the fuel tank cap. This is particularly important when using a high-pressure cleaner.

Fire fighting

If the machine catches fire, use an ABE-class powder fire extinguisher.

A BE-class carbon dioxide fire extinguisher can also be used.

Roll Over Protective Structure (ROPS)

If the machine is fitted with a Roll Over Protective Structure (ROPS) never carry out any welding or drilling in the structure or cab.

Never attempt to repair a damaged ROPS structure or cab. These must be replaced with new ROPS structure or cabs.

Battery handling

When removing batteries, always disconnect the negative cable first.

When fitting batteries, always connect the positive cable first.

Dispose of old batteries in an environmentally friendly way. Batteries contain toxic lead.

Do not use a quick-charger for charging the battery. This may shorten battery life.

Jump starting

Do not connect the negative cable to the negative terminal on the dead battery. A spark can ignite the oxy-hydrogen gas formed around the battery.

Check that the battery used for jump starting has the same voltage as the dead battery.

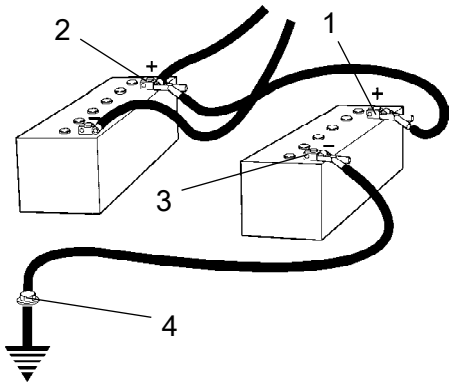

Fig. Jump starting

Turn the ignition and all power consuming equipment off. Switch off the engine on the machine which is providing jump start power.

First connect the jump start battery's positive terminal (1) to the flat battery's positive terminal (2).Then connect the jump start battery's negative terminal (3) to, for example, a bolt (4) or the lifjting eye on the machine with the flat battery.

Start the engine on the power providing machine. Let it run for a while. Now try to start the other machine. Disconnect the cables in the reverse order.

Technical specifications

Vibrations - Operator station

(ISO 2631)

The vibration levels are measured in accordance with the operational cycle described in EU directive 2000/14/EC on machines equipped for the EU market, with vibration switched on, on soft polymer material and with the operator's seat in the transport position.
Measured whole-body vibrations are below the action value of 0.5 m/s² as specified in Directive 2002/44/EC. (Limit is 1.15 m/s²)
Measured hand/arm vibrations also were below the action level of 2.5 m/s² specified in the same directive. (Limit is 5 m/s²)

Noise level

The noise level is measured in accordance with the operational cycle described in EU directive 2000/14/EC on machines equipped for the EU market, with the vibration switched on, on soft polymer material and with the operator's seat in the transport position.

Guaranteed sound power level, L_{wA}	105	dB (A)
Sound pressure level at the operator's ear (platform), L_{pA}	85 ±3	dB (A)

During operation the above values may differ because of the actual operational conditions.

Dimensions, side view

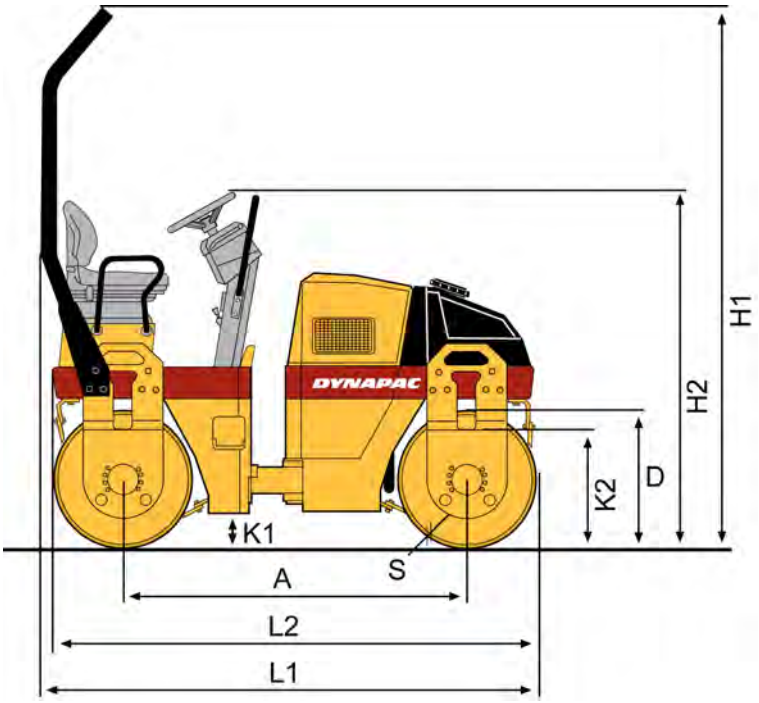

Dimensions	mm	in
A	1715	68
D	682	27
H_1	2640	104
H_2	1755	69
K_1	175	7
K_2	550	22
L_1	2450	96
L_2	2395	94
S	13	0.6

Dimensions, top view

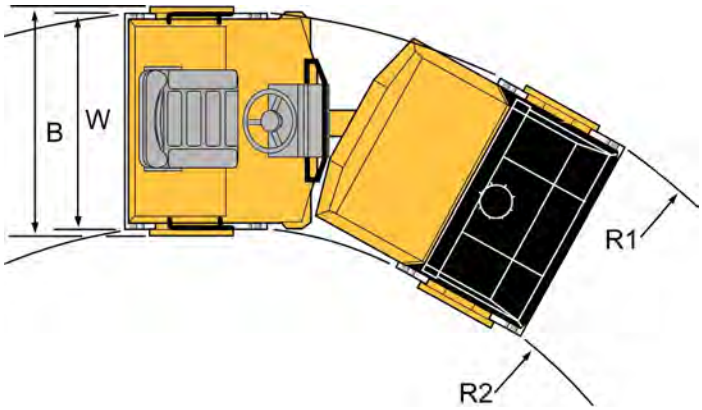

Dimensions	mm	in
B	1310	52
R_1	3800	150
R_2	2600	102
W	1200	47

Weights and volumes

Weights

Weight CECE, Standard equipped roller (kg), Deutz	2600 kg	5,735 lbs

Fluid volumes

Fuel tank	50 liters	52.9 qts
Water tank	200 liters	211.4 qts

Working capacity

Compaction data

Static linear load		10,5	kg/cm	58.8 pli
Amplitude		0,5	mm	0.019 in
Vibration frequency		58	Hz	3,480 vpm
Centrifugal force		27	kN	6,075 lb

Note: The frequency is measured at high revs. The amplitude is measured as the real value and not the nominal.

Propulsion

Speed range	0-9	km/h	0-5.6	mph
Climbing capacity (theoretical)	45	%		

General

Engine

Manufacturer/Model	Deutz D2011 L02I	
Power (SAE J1995)	23 kW	31 hp
Engine speed	2800 rpm	

Electrical system

Battery	12V 74Ah
Alternator	12V 60A
Fuses	See the Electrical system section - fuses

Tightening torque

Tightening torque in Nm (lbf.ft) for oiled or dry bolts tightened with a torque wrench.

Metric coarse screw thread, bright galvanized (fzb):

STRENGTH CLASS:

M - thread	8.8, Oiled	8.8, Dry	10.9, Oiled	10.9, Dry	12.9, Oiled	12.9, Dry
M6	8,4	9,4	12	13,4	14,6	16,3
M8	21	23	28	32	34	38
M10	40	45	56	62	68	76
M12	70	78	98	110	117	131
M14	110	123	156	174	187	208
M16	169	190	240	270	290	320
M20	330	370	470	520	560	620
M22	446	497	626	699	752	839
M24	570	640	800	900	960	1080
M30	1130	1260	1580	1770	1900	2100

Metric coarse thread, zinc-treated (Dacromet/GEOMET):

STRENGTH CLASS:

M - thread	10.9, Oiled	10.9, Dry	12.9, Oiled	12.9, Dry
M6	12,0	15,0	14,6	18,3
M8	28	36	34	43
M10	56	70	68	86
M12	98	124	117	147
M14	156	196	187	234
M16	240	304	290	360
M20	470	585	560	698
M22	626	786	752	944
M24	800	1010	960	1215
M30	1580	1990	1900	2360

ROPS-bolts which are to be torque tightened must be dry.

ROPS - bolts

Bolt dimensions :	M16 (PN 902889)
Strength class :	10.9
Tightening torque :	192 Nm, torque class 2 (Dacromet treated)

Hydraulic system

Opening pressure	**MPa**
Drive system	33,0
Supply system	2.0
Vibration system	20,0
Control systems	17,0
Brake release	1,5

Machine description

Identification

Product identification number on the frame

The machine PIN (product identification number) (1) is punched on the right edge of the front frame.

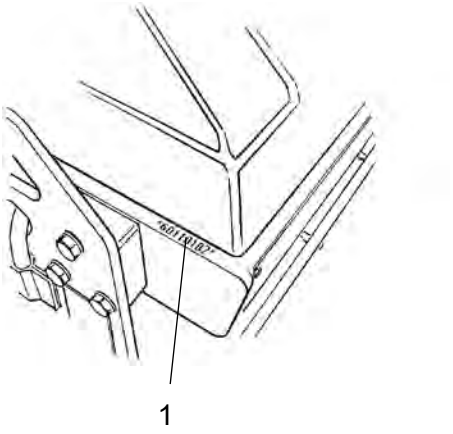

Fig. PIN right side

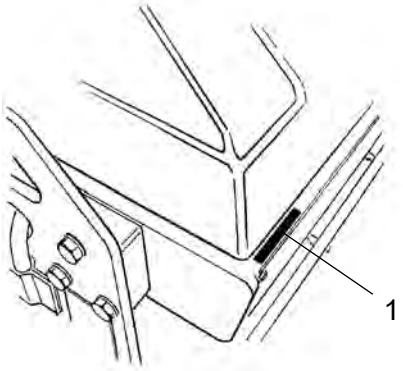

Fig. PIN front right

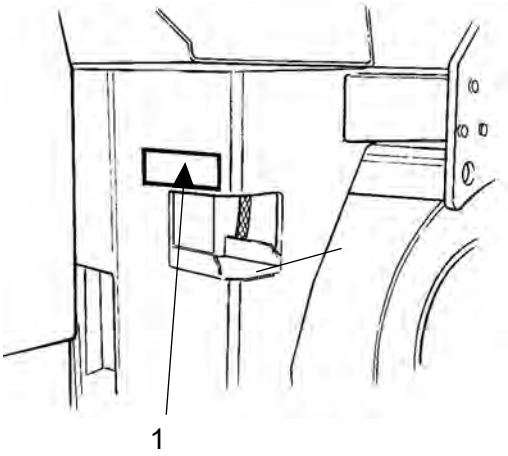

Fig. Operator platform
1. Machine plate

Machine plate

The machine type plate (1) is affixed on the left front edge of the operator's platform.

The plate specifies the manufacturer's name and address, the type of machine, the PIN number (serial number), service weight, engine power and year of manufacture. If the machine is delivered outside of the EU, the plate may not have a CE marking and the year of manufacture.

Please state the machine's PIN (serial number) when ordering parts.

Explanation of 17PIN serial number

100	00123	V	0	A	123456
A	B	C	D	E	F

A= Manufacturer

B= Family/Model

C= Check letter

D= No coding

E= Production unit

F= Serial number

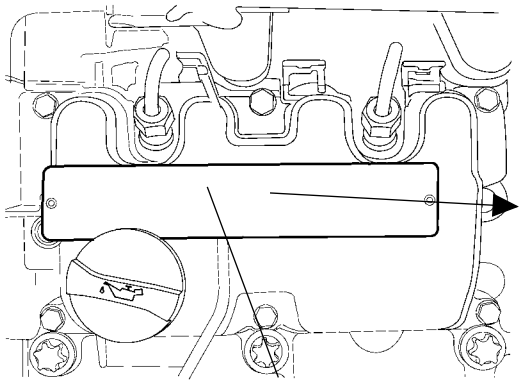

Fig. Engine
1. Type plate

Engine plates

The engine's type plate (1) is located on top of the cylinder head cover.

The plate specifies the type of engine, its serial number and the engine specification.

Please specify the engine serial number when ordering spares. Refer also to the engine manual.

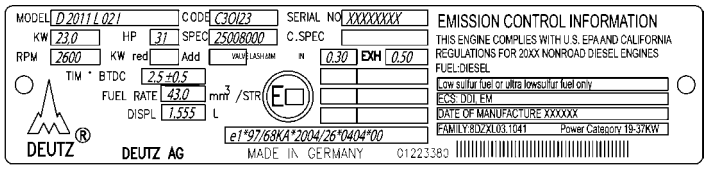

Location - decals

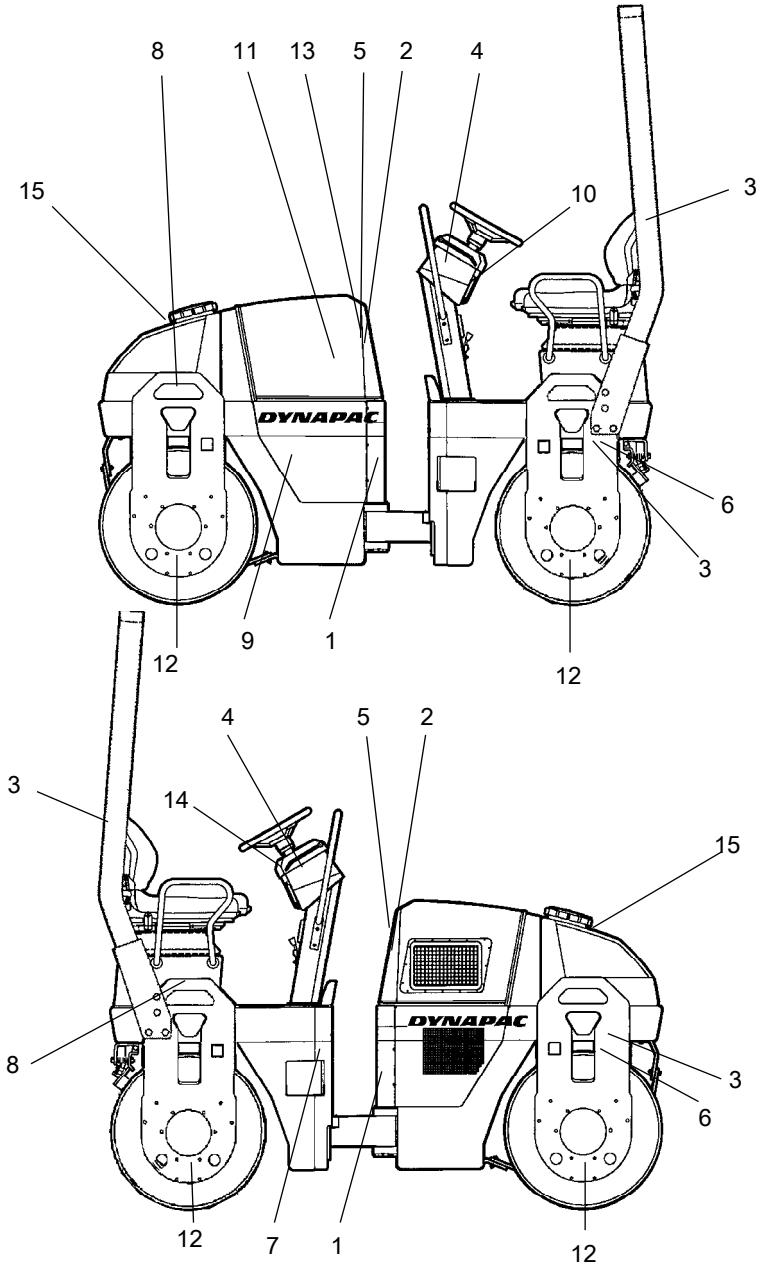

Fig. Location, decals and signs

1.	Warning, Crush zone	4700903422	8.	Lifting point	4700357587
2.	Warning, Rotating engine components	4700903423	9.	Hydraulic fluid	4700272372
3.	Warning, Locking	4700908229	10.	Handbook compartment	4700903425
4.	Warning, Instruction manual	4700903459	11.	Battery disconnector	4700904835
5.	Warning, Hot surfaces	4700903424	12.	Fixing point	4700382751
6.	Hoisting plate	4700904870	13.	Noise power level	4700791275
7.	Diesel fuel	4700991658	14.	Warning sign	4700386084
			15.	Water	4700991657

Safety decals

Always make sure that all safety decals are completely legible, and remove dirt or order new decals if they have become illegible. Use the part number specified on each decal.

903422
Warning - Crush zone, articulation/drum.

Maintain a safe distance from the crush zone.
(Two crush zones on machines fitted with pivotal steering)

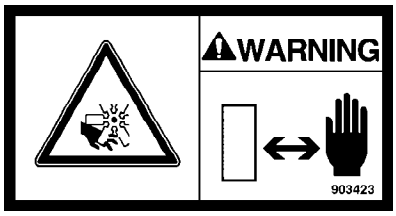

903423
Warning - Rotating engine components.

Keep your hands at a safe distance from the danger zone.

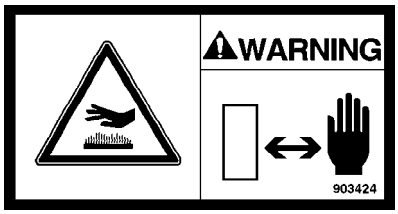

903424
Warning - Hot surfaces in the engine compartment.

Keep your hands at a safe distance from the danger zone.

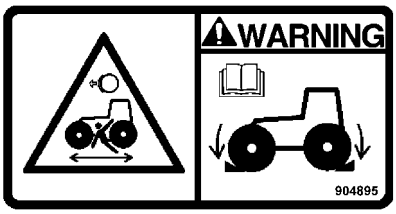

904895
Warning - Brake disengagement

Study the towing chapter before disengaging the brakes.

Danger of being crushed.

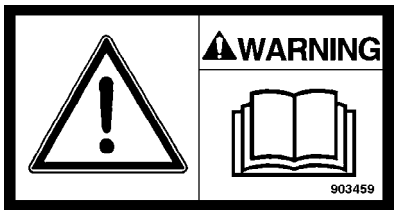

903459
Warning - Instruction manual

The operator must read the safety, operation and maintenance instructions before operating the machine.

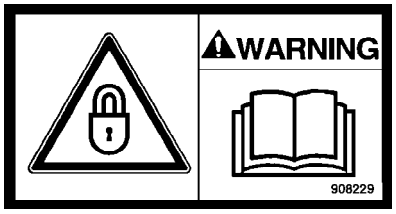

908229
Warning - Locking

The articulation must be locked when lifting.

Read the instruction manual.

Info decals

Noise power level

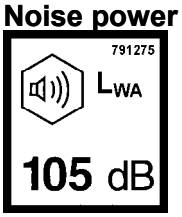

Diesel fuel

Lifting point

Hoisting plate

Handbook compartment

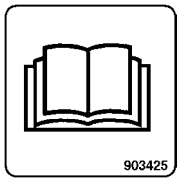

Master switch

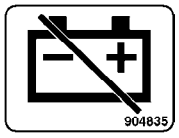

Hydraulic fluid

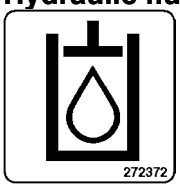

Biological hydraulic fluid

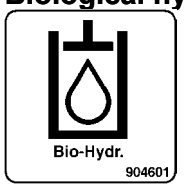

Securing point

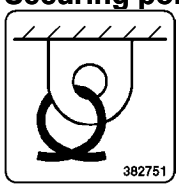

Biological hydraulic fluid, PANOLIN

Water

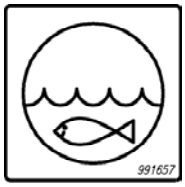

Instruments/Controls

Locations - Instruments and controls

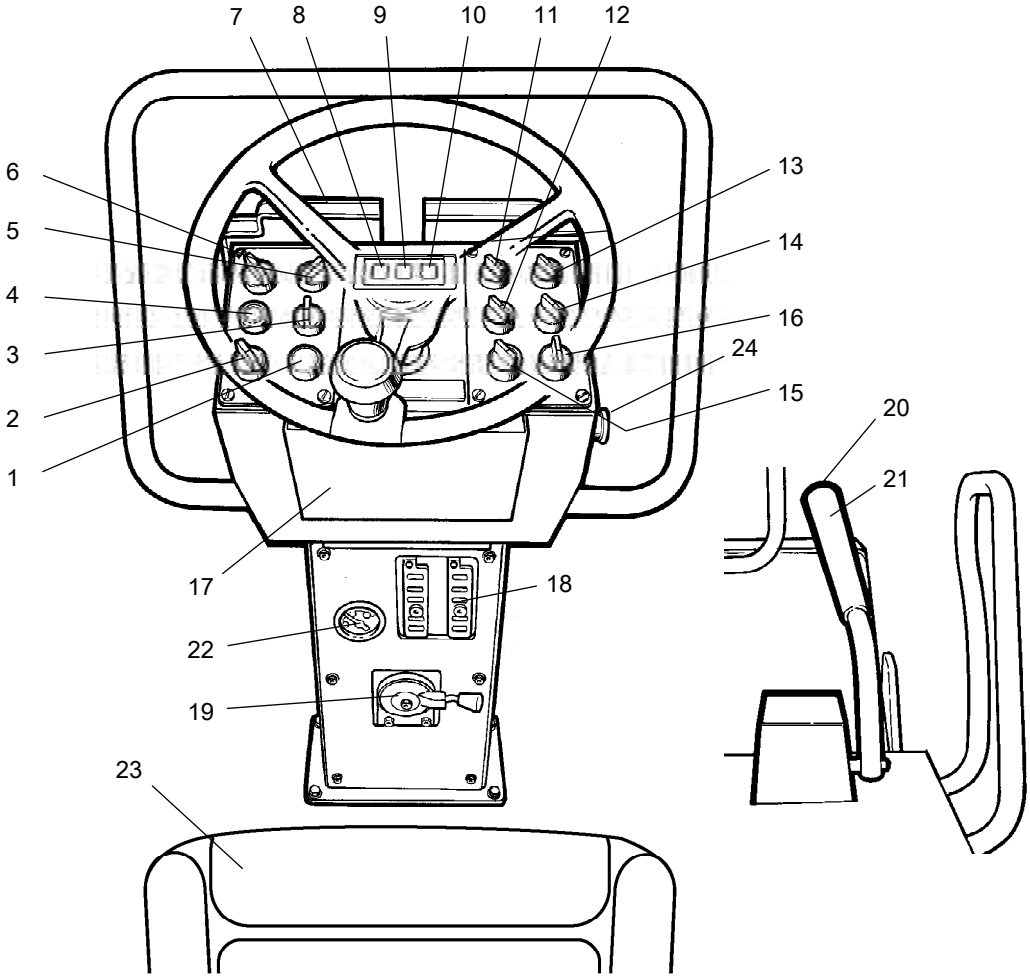

Fig. Instruments and control panel

1. Horn
2. Ignition switch
3. Manual/Automatic sprinkler
4. Start button
5. Manual/Automatic vibration*
6. Parking brake
7. Instrument cover
8. Warning lamp, charging
9. Brake warning lamp
10. Warning lamp, oil pressure/engine temp.
11. Working lights*
12. Hazard beacon*
13. Driving lights*
14. Vibration, front/rear drum*
15. Hazard lights*
16. Direction indicator*
17. Safety and instruction books
18. Fuse boxes
19. Engine speed control
20. Vibration ON/OFF
21. Forward/reverse lever
22. Fuel gauge*
23. Seat switch
24. Emergency stop

* = Optional

Function descriptions

No	Designation	Symbol	Function
1	Horn, switch		Press to sound the horn.
2	Ignition switch		The electric circuit is broken.
			All instruments and electric controls are supplied with power.
3	Sprinkler system		Regulates flow of water to drum. MAN position gives continuous watering. In position 0 the watering is turned off. AUT position gives automatic ON/OFF switching of the watering during forward and reverse operation.
4	Start switch		Press to connect starter.
5	Manual/Automatic vibration		In manual position the operator must activate the vibrations via the switch (20) on the Forward/Reverse lever. In automatic position the vibrations are activated when the preset speed is reached.
6	Parking brake		Left position = Brake released Right position = Brake activated
7	Instrument cover		Folds over the instrument plate to provide protection from the weather and sabotage.
8	Warning lamp, battery charging		If the lamp goes on while the engine is running, the alternator is not charging. Stop the engine and locate the fault.
9	Brake warning lamp		The lamp goes on when the parking brake is activated or when the emergency brake button is pressed and the brakes are applied.
10	Warning lamp, oil pressure, or high oil temperature in engine.		The lamp comes on if the engine oil pressure is too low. Stop the engine immediately and locate the fault.
11	Working light when reversing, switch (Optional)		Turn to right to switch on the working lights.
12	Hazard beacon, switch		Turn to the right to switch on the hazard beacon.
13	Working light forward, switch (Optional)		Lights off.
			Parking lights on
			Front working lights on
14	Vibration, front/rear drum, switch (Optional)	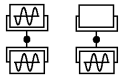	Middle position = Vibration turned off. Left position = Vibration on both drums. Right position = Vibration on one drum.
15	Hazard warning lights, switch		Turn the switch to the right to turn on the hazard warning lights.

No	Designation	Symbol	Function
16	Direction indicator, switch		Turn to the left to switch on the left direction indicators etc. The direction indicators are off in the middle position.
17	Handbook compartment		Pull up and fold open at the top to access the handbooks.
18	Fuse box (on front of steering column)		Contains fuses for electrical system. See under heading "Electrical system" for functional description of the different fuses.
19	Engins speed control, engine		In the right position, the engine idles. In the left position, the engine runs at maximum speed.
20	Vibration On/Off, switch		Push and release the switch to engage vibration, push once more to disengage vibration.
21	Forward/Reverse lever		The lever must be in neutral to start the diesel engine. The engine cannot be started if the forward/reverse lever is in any other position. The forward/reverse lever controls both the roller's driving direction and speed. When the lever is moved forward, the roller moves forward etc. The roller's speed is proportional to the distance the lever is from the neutral position. The further the lever is from the neutral position, the higher the speed.
22	Warning lamp, low fuel level (Optional)		When the lamp comes on, there is only a small amount of fuel left. Refuel as soon as possible.
24	Emergency stop		When pressed, the emergency stop is activated. The engine switches off and the brakes are activated. Brace yourself for a sudden stop.

Electrical system

Fuses

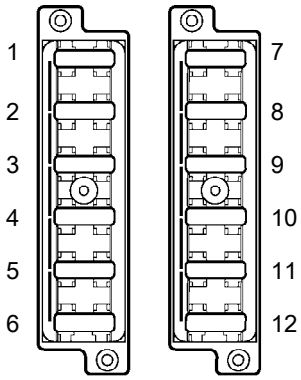

Fig. Fuse box, left and right side.

The figure shows the position of the fuses.

The table below gives fuse amperage and function. All fuses are flat pin fuses.

	Fuse box, left side (standard)			Fuse box, right side (Optional)	
1.	Brake valve, starter relay, hourmeter	10A	7	Beam forward, position light L, rear light R	15A
2.	VBS relay	7.5A	8	Beam at rear, position light L, rear light R, plate light	15A
3.	Water pump, neutral relay	10A	9	Indicators right	5A
4.	Horn, fuel gauge	7.5A	10	Indicators left	5A
5.	-	7.5A	11	Hazard beacon	10A
6.	Reversing signal, flow divider	7.5A	12	Indicator relay	10A

Operation

Before starting

Master switch - Switching on

Remember to carry out daily maintenance. See the maintenance instructions.

The battery disconector is located in the engine compartment. Turn the key (1) to the On position. The roller is now supplied with power.

Pos. (2) is the engine's hourmeter. The hours are counted while the engine is running.

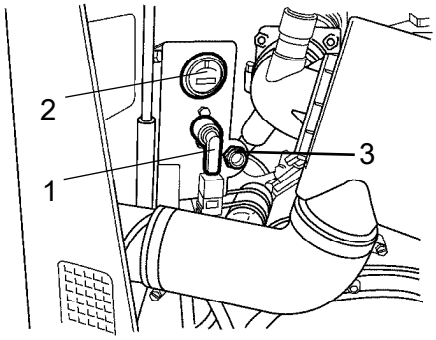

Fig. Engine compartment
1. Battery disconnector
2. Hourmeter
3. Power socket, 12 V

The engine hood must be unlocked when operating, so that the battery can be quickly disconnected if necessary.

Driver seat - Adjustment

Adjust the operator’s seat so that the position is comfortable and so that the controls are within easy reach.

The seat can be adjusted as follows.

- Length adjustment (1)
- Backrest adjustment (2)
- Weight adjustment (3)

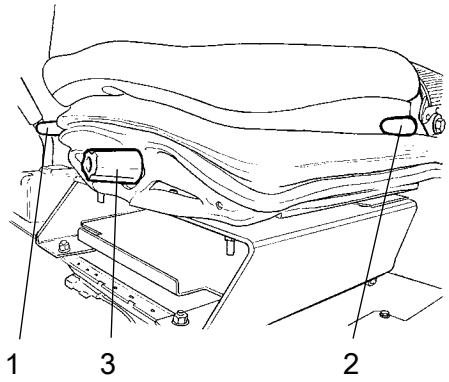

Fig. Driver seat
1. Handle - Length adjustment
2. Handle - Backrest angle
3. Handle - Weight adjustment

Always check that the seat is in locked position before starting.

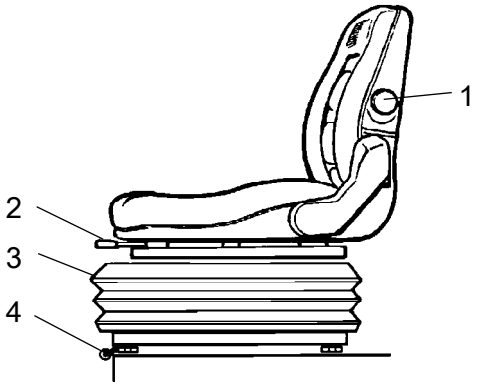

Fig. Comfort seat (Optional)
1. Backrest angle
2. Length adjustment
3. Weight adjustment
4. Sidways adjustment (Optional)

Comfort seat - Adjustment

Adjust the operator's seat so that the position is comfortable and so that the controls are within easy reach.

The seat can be adjusted as follows.

- Backrest adjustment (1)
- Length adjustment (2)
- Weight adjustment (3)
- Sideways adjustment (4)

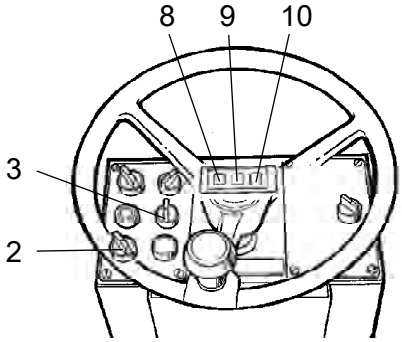

Fig. Instrument panel
2. Ignition switch
3. Sprinkler switch
8,9,10 Warning lamps

Instruments and lamps - Checking

Make sure that the emegency stop button is pulled out and the parking brake is activated. When the forward/reverse lever is in neutral, the automatic brake function is engaged.

Turn the ignition switch (2) to the right.

Check that the warning lamps 8,9,10 go on.

Turn the switch (3) for the sprinkler to operating position, and check that the system works.

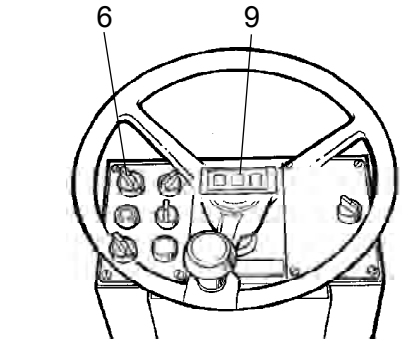

Fig. Instrument panel
6. Parking brake knob
9. Brake warning lamp

Parking brake - Check

Make sure that the parking brake knob (6) is definitely in the right-hand position. The roller can start to roll when the engine is started on sloping ground, if the parking brake is not applied.

Interlock

The roller is equipped with Interlock.

The engine switches off 4 seconds after the operator rises from the seat.

The engine stops whether the forward/reverse lever is in the neutral or the drive position.

The engine does not stop if the parking brake is activated.

Sit down for all operations!

Operator position

If an ROPS (2) (Roll Over Protective Structure) is fitted to the roller, always wear the seat belt (1) and wear a protective helmet.

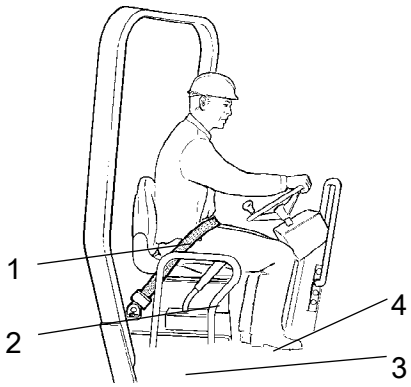

Fig. Driver seat
1. Seat belt
2. Safety rails
3. Rubber element
4. Anti-slip

Always replace the seat belt (1) if it shows signs of wear or has been subjected to excessive strain.

Check that the platform's rubber elements (3) are in good condition. If the elements are worn this will have a negative effect on comfort.

Ensure that the anti-slip (4) on the platform is in good condition. Replace where anti-slip friction is poor.

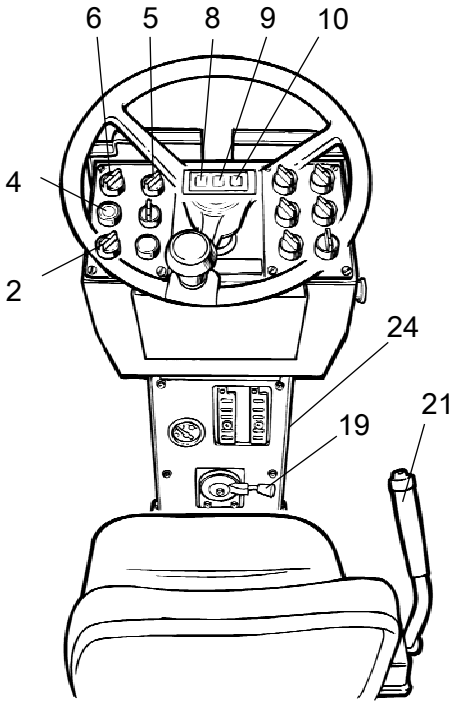

Fig. Instrument column
2. Ignition switch
4. Start switch
5. Vibration switch
6. Parking brake knob
8. Charging lamp
9. Brake warning lamp
10. Oil pressure/Engine temperature lamp
19. Engine speed control
21. Forward/Reverse lever
24. Emergency stop

Starting

Starting the engine

The operator must remain seated when starting.

Make sure that the emegency stop button (24) is pulled out and the parking brake (6) is activated.

Set the Forward/reverse lever (21) in neutral. You cannot start the engine if the lever is in any other position.

On some models the Forward/reverse lever is placed on the side of the instrument panel, but the function is the same.

Set the vibration switch (5) for manual/automatic vibration to the 0 position.

Set the speed control (19) to **at least** half throttle. (On some models the control is placed on the right side of the instrument panel).

Turn the ignition switch (2) to the right to position I. Press the start switch (4). Release the start switch as soon as the engine starts.

Do not run the starter motor for too long. If the diesel engine does not start immediately, wait a minute or two before trying again.

Let the engine idle for a few minutes to warm, longer if the ambient temperature is below +10°C (50°F).

While the engine is warming up, check that the warning lamps for oil pressure (10) and charging (8) have gone off. The warning lamp (9) for the Emergency/parking brake should still be on.

Ensue that there is good ventilation (air extraction) if the engine is run indoors. Risk of carbon monoxide poisoning.

When starting up and driving a cold machine, which implies cold hydraulic fluid, the braking distance will be longer than normal until the machine reaches working temperature.

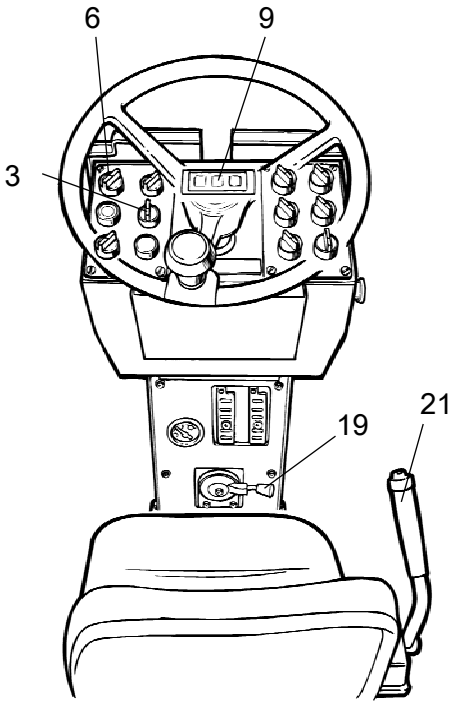

Fig. Instrument panel
3. Sprinkler switch
6. Parking brake knob
9. Brake warning lamp
19. Engine speed control
21. Forward/reverse lever

Driving

Operating the roller

The machine must in no circumstances be operated from the ground. The operator must be siting in the driver seat at all times when the machine is in operation.

Make sure that the work area in front and behind the roller is clear.

Release the parking brake (6) and check that the parking brake lamp (9) goes off.

Turn the engine speed control (19) and lock it in the working position.

Check that the steering is working properly by turning the steering wheel once to the right and once to the left while the roller is stationary.

When compacting asphalt, remember to turn on the sprinkler system (3).

Carefully move the Forward/reverse lever (21) forwards or backwards, depending on which direction of travel is required. The speed increases as the lever is moved away from the neutral position.

The speed should always be controlled using the Forward/reverse lever and never by changing the engine speed.

Check when operating that the warning lamps do not come on.

Interlock/Emergency stop/Parking brake - Check

The interlock, emergency stop and parking brake must be checked daily before operating. A function check of the interlock and emergency stop requires a restart.

The interlock function is checked by the operator standing up from the seat when the roller is moving very slowly forwards/backwards. (Check in both directions). Hold the steering wheel firmly and brace yourself for a sudden stop. A buzzer goes on and after 4 seconds the engine switches off and the brakes are activated.

Check the function of the emergency stop by pressing the emergency stop button when the roller is moving slowly forwards/backwards. (Check in both directions). Hold the steering wheel firmly and brace yourself for a sudden stop. The engine switches off and the brakes are activated.

Check the function of the parking brake by activating the parking brake when the roller is moving very slowly forwards/backwards. (Check in both directions). Hold the steering wheel and brace yourself for a sudden stop when the brakes are activated. The engine does not switch off.

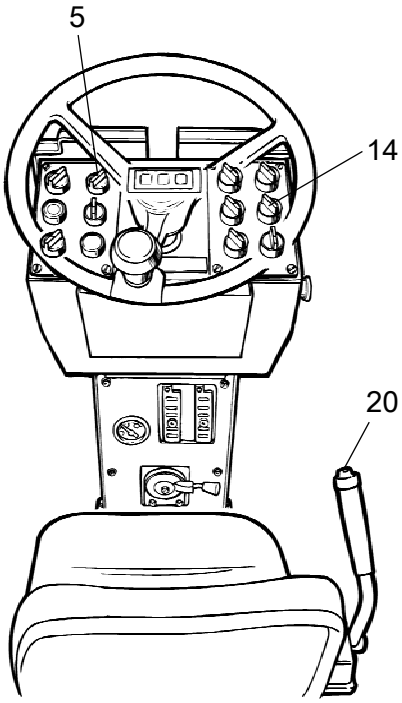

Fig. Instrument column
5. Vibration switch
14. Vibration front/rear drum (Optional)
20. Vibration On/Off

Vibration

Manual/Automatic vibration

Select manual or automatic switching ON/OFF with the switch (5).

In manual mode, the operator must activate vibration via the switch (20) on the forward/reverse lever.

In the automatic position, vibration is activated when the preset speed is reached.

Even switching off is automatic when the lowest speed is reached.

Manual vibration - Switching on

Engage and disengage vibration using the switch (20) on the forward/reverse lever. Always switch off the vibration before the roller comes to a standstill.

Never activate vibration when the roller is stationary. This can damage both the surface and the machine.

Vibration on one drum (Optional)

The switch (14) is used to select vibration with the rear drum only, or with two drums.

When the vibration is on the operator must activate vibration via the switch (20) on the forward/reverse lever.

In the left position the vibration is activated on both drums.

In the right position the vibration is activted on the rear drum.

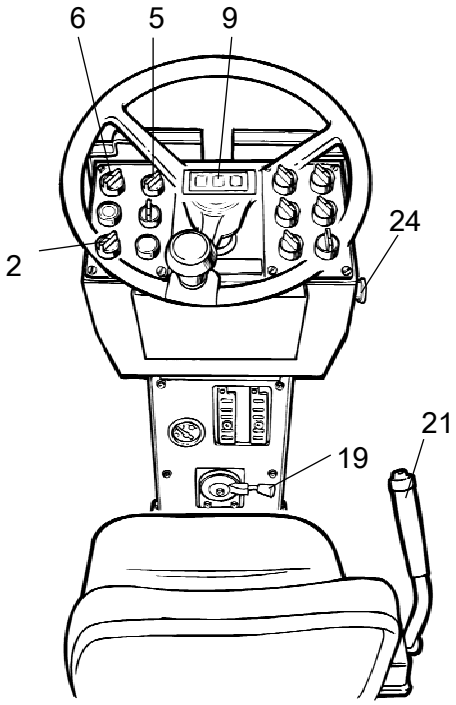

Fig. Control panel
2. Ignition switch
5. Vibration switch
6. Parking brake knob
9. Brake warning lamp
19. Engine speed control
21.Forward/reverse lever
24. Emergency stop

Braking

Emergency braking

Braking is normally activated by using the Forward/reverse lever. The hydrostatic transmission brakes the roller when the lever is moved to the neutral position.

A disc brake in each drum motor also acts an emergency brake when in motion, and as a parking brake when stationary.

For emergency braking, press the emergency stop (24), hold the steering wheel firmly and be prepared for a sudden stop. The engine stops.

After emergency braking, reset the forward/reverse lever to the neutral position, pull out the emergency stop button (24), and activate the parking brake (6). Restart the engine.

Normal braking

Switch off the vibration by pressing the button on the forward/reverse lever (21).

Set the forward/reverse lever (21) in the neutral position to stop the roller.

Turn the engine speed control (19) back to the idling position, and allow the engine to idle for a few minutes to cool down.

When starting and driving a machine that is cold, remember that the hydraulic fluid is also cold and that braking distances can be longer than normal until the machine reaches the working temperature.

Never leave the operator platform without activating the parking brake (6).

Switching off

Turn the parking brake knob (6) to the right.

Check the instrument and warning lamps to see if there are any faults. Switch off the lighting and other electrical functions.

Turn the starter switch (2) to position 0. At the end of the shift, fold over the instrument cover and lock.

Parking

Chocking the drums

Never disembark from the roller when the diesel engine is running, without first activating the parking brake.

Make sure that the roller is parked in a safe place with respect to other road users. Chock the drums if the roller is parked on sloping ground.

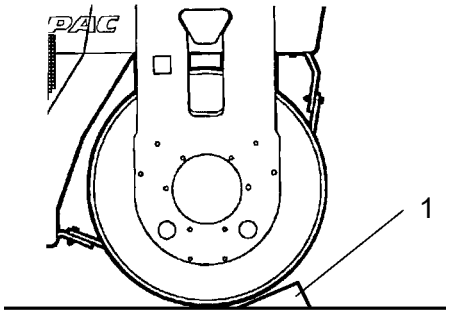

Fig. Drum part
1. Chocks

Remember that there is a risk of freezing during the winter. Empty the water tank. Fill antifreeze in the engine's cooling system. See also maintenance instructions.

Battery disconnector

Before leaving the roller at the end of the shift, switch off the battery disconnector (1) and remove the key.

This will prevent battery discharging and will also make it difficult for unauthorized persons to start and operate the machine. Lock also the engine cover.

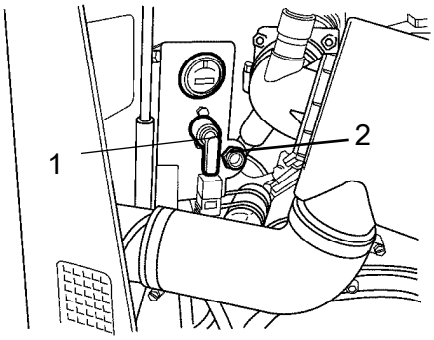

Fig. Battery bay
1. Battery disconnector
2. Power socket, 12 V

Long-term parking

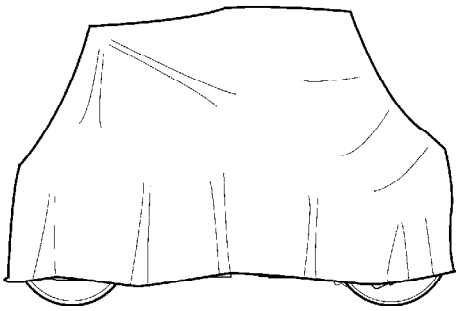

Fig. Roller weather protection

The following instructions should be followed when long term parking (more than one month).

These measures apply when parking for a period of up to 6 months.

Before re-commissioning the roller, the points marked with an asterisk * must be returned to the pre-storage state.

Wash the machine and touch up the paint finish to avoid rusting.

Treat exposed parts with anti-rust agent, lubricate the machine thoroughly and apply grease to unpainted surfaces.

Engine

* Refer to the manufacturer’s instructions in the engine manual that is supplied with the roller.

Battery

* Remove the battery from the machine. Clean the battery, check that the electrolyte level is correct (see under the heading 'Every 50 hours of operation') and trickle-charge the battery once a month.

Air cleaner, exhaust pipe

* Cover the air cleaner (see under the heading 'Every 50 hours of operation' or 'Every 1000 hours of operation') or its opening with plastic or tape. Also cover the exhaust pipe opening. This is to avoid moisture entering the engine.

Fuel tank

Fill the fuel tank completely full to prevent condensation.

Hydraulic reservoir

Fill the hydraulic reservoir to the uppermost level mark (see under the heading ‘Every 10 hours of operation.’)

Water tank

Empty the water tank completely to avoid fouling.

Steering cylinder, hinges, etc.

Lubricate the steering joint bearings and both bearings on the steering cylinder with grease (see under the heading 'Every 50 hours of operation').

Grease the steering cylinder piston with conservation grease.

Grease the hinges on the doors to the engine compartment and the cab. Grease both ends of the forward/reverse control (bright parts) (see under the heading 'Every 500 hours of operation').

Hoods, tarpaulin

* Lower the instrument cover over the instrument panel.

* Cover the entire roller with a tarpaulin. A gap must be left between the tarpaulin and the ground.

* If possible, store the roller indoors and ideally in a building where the temperature is constant.

Miscellaneous

Lifting

Locking the articulation

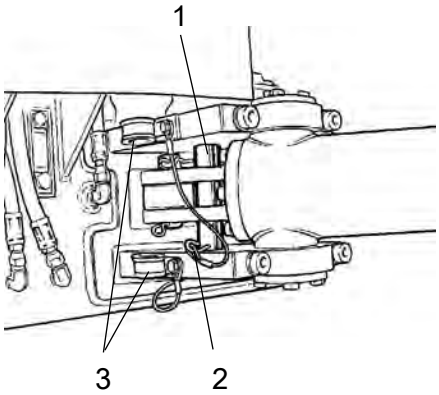

Fig. Left side of steering joint
1. Lock bar
2. Lock pin
3. Holder

Before lifting the roller the steering joint must be locked to prevent it turning.

Turn the steering wheel to the straight ahead position. Turn the parking brake knob to the right.

Pull down the galvanized lock bar (1) from its holder (3), and place it from underneath in the hole on the lower steering joint bracket. Press the bar through until the upper end is visible in the hole on the upper steering joint bracket.

Secure the bar with the lock pin (2).

Lifting the roller

Weight: refer to the hoisting plate on the roller

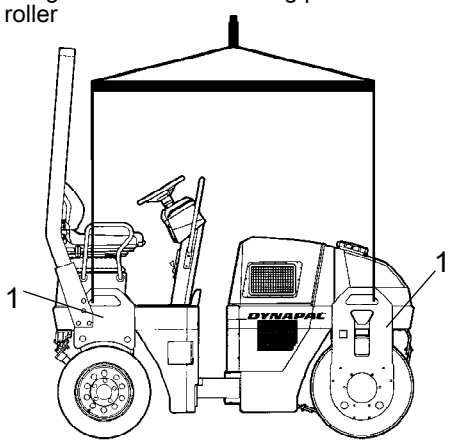

Fig. Lifting the roller
1. Lifting plate

The weight of the machine is shown on the lifting plate (1). See also Technical specifications.

Lifting equipment such as chains, steel wires, straps and lifting hooks must be dimensioned in accordance with the relevant safety regulations for the lifting equipment.

Stand well clear of the hoisted machine! Make sure that the lifting hooks are properly secured.

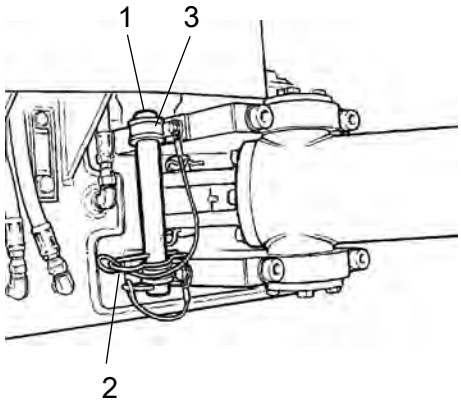

Fig. Left side of steering joint
1. Lock bar
2. Lock pin
3. Holder

Unlocking the articulation

Remember to refit the lock bar (1) in its holder after operation.

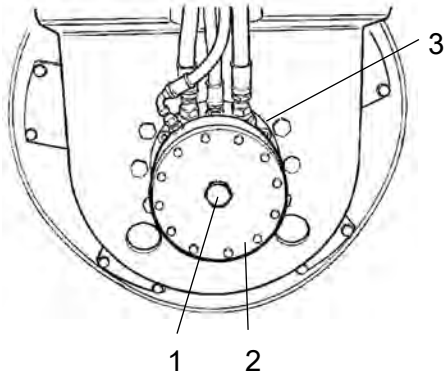

Fig. Left drum side
1. Release screw
2. Brake housing
3. Drive motor

Towing/Recovering

The roller can be moved up to 300 meters (1,000 ft) using the instructions below.

Releasing the brake (Optional)

The following instruction refers to CC102/102C/CC122/122C, and CC142C rear wheel motors.

Activate the parking brake, and stop the engine. Block the drum with a chock to prevent movement; the roller can start rolling when the brakes are released.

The disc brakes in each drive motor must be released mechanically as shown below before the towing the roller.

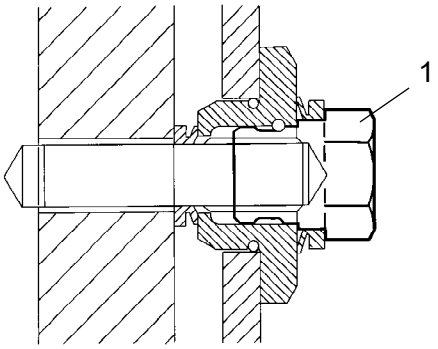

Fig. Brake housing
1. Release screw

Use a key with an 18 mm socket.

Turn the release screw (1) a 1 1/2 turn clockwise to release the brake.

Release the brakes on both drums.

Turn the same screws a 1 1/2 turn anticlockwise to activate the brakes again after towing.

Towing the roller

The roller must be counter-braked during towing/recovery. Always use a towbar. There is no braking capacity on the roller now.

The roller must be towed slowly, max. 3 kph (2 mph) and only towed short distances, max. 300 m (1000 ft).

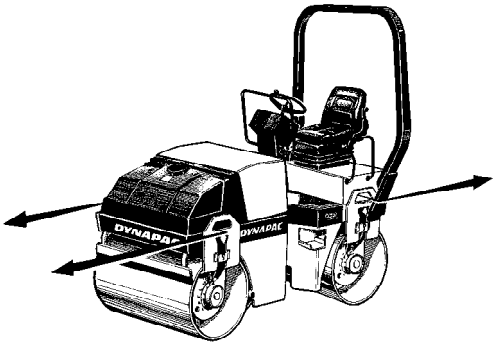

Fig. Towing

When towing/retrieving a machine, the towing device must be connected to both lifting holes. The pulling force shall act longitudinally on the machine as shown in the figure. Maximum total pulling force 130 kN (29225 lbf).

Reverse the towing preparations.

Roller prepared for transport

Lock the articulation before lifting and transporting. Follow the instructions under the relevant heading.

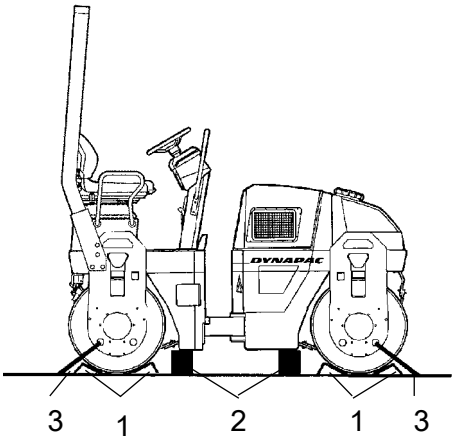

Fig. Arrangement
1. Chocks
2. Wooden blocks
3. Lashing straps

Chock the drums (1) and secure the chocks to the transport vehicle.

Block up under the drum frame (2), to avoid overloading the rubber suspension when lashing.

Secure down the roller with lashing straps (3) at all four corners. The attachment points are shown on the decals.

Remember to reset the steering joint lock to its open position before starting the roller again.

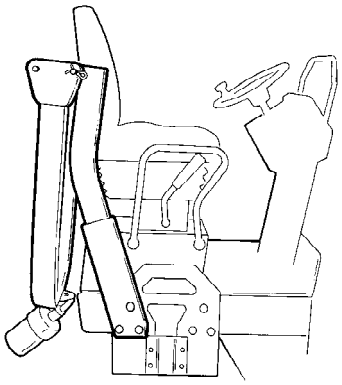

Fig.

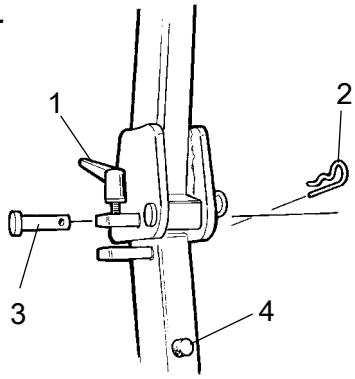

Fig. ROPS locking device
1. Tensioning screw
2. Pin
3. Stud
4. Rubber buffer

Retractable ROPS (Optional)

The machine can be equipped with retractable ROPS.

Risk of crush injury when raising and lowering ROPS.

If the roller is equipped with a retractable ROPS, the machine must only be operated when it is lifted up and locked.

To retract the ROPS, release the tensioning screw (1), and pull out the pin (2) and stud (3). Do the same on both sides. Lower the ROPS backwards if there is space.

After lowering the ROPS, replace the pin and stud.

To lift the ROPS proceed in the reserve order.

Always make sure the ROPS is locked in raised position before operation.

Grease the tensioning screw (1) and stud (3) periodically.

Operating instructions - Summary

1. **Follow the SAFETY INSTRUCTIONS specified in the Safety Manual.**

2. Make sure that all instructions in the MAINTENANCE section are followed.

3. Turn the master switch to the ON position.

4. Move the forward/reverse lever to the NEUTRAL position.

5. Set the switch for Manual/Automatic vibration to the 0 position.

6. Set the engine speed control to full speed.

7. Set the emergency stop brake button in the pulled out position.

8. Start the engine and allow it to warm up.

9. Set the engine speed control to the operating position.

10. **Drive the roller. Operate the forward/reverse lever with care.**

11. **Check the brakes, drive slowly. Remember that the braking distance will be longer if the roller is cold.**

12. Use vibration only when the roller is in motion.

13. Check that the drums are thoroughly watered when watering is required.

14. **IN AN EMERGENCY:**
    - Press the EMERGENCY STOP BUTTON
    - Hold the steering wheel firmly.
    - Brace yourself for a sudden stop. The engine stops.

15. Parking: - Stop the engine and chock the drums.

16. When lifting: - Refer to the relevant section in the Instruction Manual.

17. When towing: - Refer to the relevant section in the Instruction Manual.

18. When transporting: - Refer to the relevant section in the Instruction Manual.

19. When recovering - Refer to the relevant section in the Instruction Manual.

Preventive maintenance

Complete maintenance is necessary for the machine to function satisfactorily and at the lowest possible cost.

The Maintenance section includes the periodic maintenance that must be carried out on the machine.

The recommended maintenance intervals assume that the machine is used in a normal environment and working conditions.

Acceptance and delivery inspection

The machine is tested and adjusted before it leaves the factory.

On arrival, before delivery to the customer, delivery inspection must be conducted as per the check list in the warranty document.

Any transport damage must be immediately reported to the transport company.

Warranty

The warranty is only valid if the stiplulated delivery inspection and the separate service inspection have been completed as per the warranty document, and when the machine has been registered for starting under the warranty.

The warranty is not valid if damage has been caused by inadequate service, incorrect use of the machine, the use of lubricants and hydraulic fluids other than those specified in the manual, or if any other adjustments have been made without the requisite authorisation.

Maintenance - Lubricants and symbols

Fluid volumes

Hydraulic tank	40 liters	42.2 qts
Diesel engine	6,5 liters	6.9 qts
Drum	4 liters	4.2 qts

Always use high-quality lubricants and the amounts recommended. Too much grease or oil can cause overheating, resulting in rapid wear.

	ENGINE OIL	Air temperature -15°C - +50°C (5°F-122°F) Shell Rimula R4 L 15W-40, API CH-4 or equivalent.
	HYDRAULIC FLUID	Air temperature -15°C - +40°C (5°F-104°F) Shell Tellus T68 or equivalent. Air temperature over +40°C (104°F) Shell Tellus T100 or equivalent.
Bio-Hydr.	**BIOLOGICAL HYDRAULIC FLUID**	BP BIOHYD SE-S 46 When it leaves the factory, the machine may be filled with biologically degradable fluid. The same type of fluid must be used when changing or topping up.
Bio-Hydr.	**BIOLOGICAL HYDRAULIC FLUID, PANOLIN**	PANOLIN HLP Synth 46 When it leaves the factory, the machine may be filled with biologically degradable fluid. The same type of fluid must be used when changing or topping up. (www.panolin.com)
	DRUM OIL	Air temperature -15°C - +40°C (5°F-104°F) Shell Spirax AX 80W/90, API GL-5 or equivalent. Air temperature 0°C (32°F) - over +40°C (104°F) Shell Spirax AX 85W/140, API GL-5 or equivalent.
	GREASE	Shell Retinax LX2, or equivalent
D	**FUEL**	See engine manual.

Other fuel and lubricants are required when operating in areas with extremely high or extremely low ambient temperatures. See the 'Special instructions' chapter, or consult Dynapac.

Maintenance symbols

	Engine, oil level		Air filter
	Engine, oil filter		Battery
	Hydraulic reservoir, level		Sprinkler
	Hydraulic fluid, filter		Sprinkler water
	Drum, oil level		Recycling
	Lubricating oil		Fuel filter

Maintenance - Maintenance schedule

Service and maintenance points

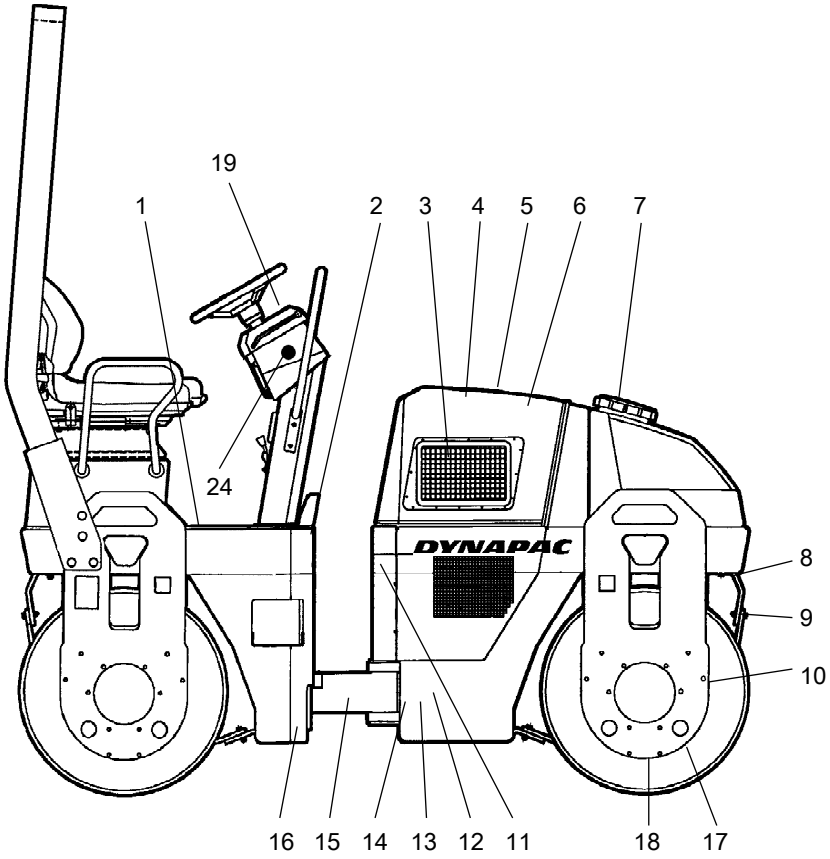

Fig. Service and maintenance points

1. Fuel tank
2. Refueling
3. Cooler
4. Air cleaner
5. Battery
6. Diesel engine
7. Water tank
8. Sprinkler system
9. Scrapers
10. Shock absorbers and attachment screws
11. Hydraulic fluid refilling
12. Hydraulic fluid tank
13. Hydraulic fluid filter
14. Hydraulic fluid level glass
15. Steering joint
16. Steering cylinder bracket
17. Filler plugs/Drum
18. Oil level in drum
19. Parking brake knob
24. Emergency stop

General

Periodic maintenance should be carried out after the number of hours specified. Use the daily, weekly etc. periods where number of hours cannot be used.

Remove all dirt before filling, when checking oils and fuel and when lubricating using oil or grease.

The manufacturer's instructions found in the engine manual also apply.

Every 10 hours of operation (Daily)

Refer to the contents to find the page number of the sections referred to !

Pos. in fig	Action	Comment
	Before starting up for the first time on that day	
6	Check the engine oil level	Refer to the engine manual
14	Check the hydraulic reservoir level	
3	Check for free circulation of cooling air	
1	Fill the fuel tank	
7	Fill the water tank	
8	Check the sprinkler system	
9	Check the scraper setting	
19	Test the brakes	

After the FIRST 50 hours of operation

See Contents to find the page number of the sections referred to!

Pos. in fig	Action	Comment
6	Change the engine oil and oil filter	Refer to the engine manual
6	Change the fuel filter	Refer to the engine manual
13	Change the hydraulic fluid filter	
10	Check bolted joints	

Every 50 hours of operation (Weekly)

See Contents to find the page number of the sections referred to!

Pos. in fig	Action	Comment
4	Check indicator for air cleaner Check that the air hoses are in good condition and that the connections are tight	
15	Grease the steering joint	
16	Grease the steering cylinder brackets	

Every 250 hours of operation (Monthly)

See Contents to find the page number of the sections referred to!

Pos. in fig	Action	Comment
3	Clean the hydraulic fluid cooler	
5	Check the electrolyte level in the battery	
6	Clean the engine cooling flanges	Refer to the engine manual

Every 500 hours of operation (Every three months)

See Contents to find the page number of the sections referred to!

Pos. in fig	Action	Comment
18	Check the oil level in the drums	
10	Check rubber elements and bolted joints	
11	Check the hydraulic reservoir cover/breather	
6	Lubricate hinges and controls	
6	Change the engine oil and oil filter	Refer to the engine manual
6	Check engine's V-belt	Refer to the engine manual

Every 1000 hours of operation (Every six months)

See Contents to find the page number of the sections referred to!

Pos. in fig	Action	Comment
13	Change the hydraulic fluid filter	
12	Drain condensate from hydraulic tank	
6	Change the engine's fuel filter	
6	Change the engine's pre-filter	
6	Check the engine's toothed belt	Refer to the engine manual
6	Check engine's valve clearances	Refer to the engine manual

Every 2000 hours of operation (Yearly)

See Contents to find the page number of the sections referred to!

Pos. in fig	Action	Comment
12	Change the hydraulic fluid	
18	Change the oil in the drums	
7	Drain and clean the water tank	
1	Drain and clean the fuel tank	
	Check the condition of the articulation	

Maintenance - 10h

Park the roller on a level surface.
The engine must be switched off and the parking brake activated when checking or adjusting the roller, unless otherwise specified.

Ensue that there is good ventilation (air extraction) if the engine is run indoors. Risk of carbon monoxide poisoning.

Hydraulic reservoir, Level check - Filling

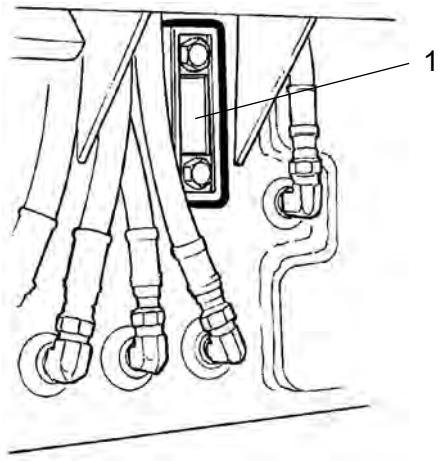

Fig. Hydraulic fluid tank
1. Sight glass

Check that the level is between the min and max markings. Top up with hydraulic fluid as per lubricant specifications if level is too low.

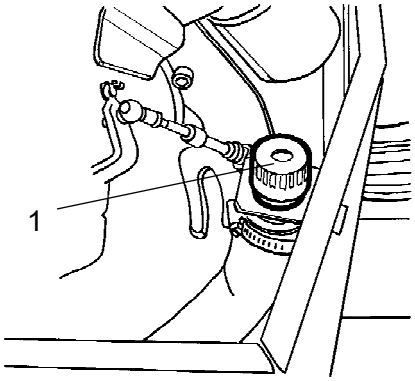

Fig. Engine compartment
1. Hydraulic fluid refilling

Open the hood and unscrew the filler cap (1), top up with hydraulic fluid if the level is too low.

Air circulation - Check

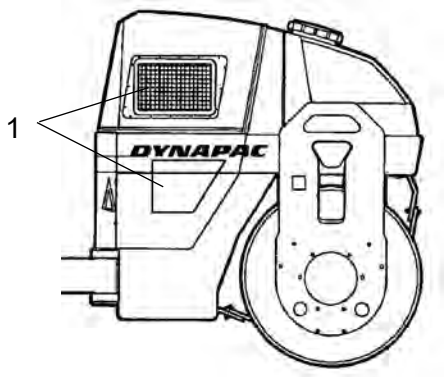

Fig. Right drum side
1. Cooling air grille

Check that the engine has free circulation of cooling air through the grille (1) in the engine compartment.

Fuel tank - Filling

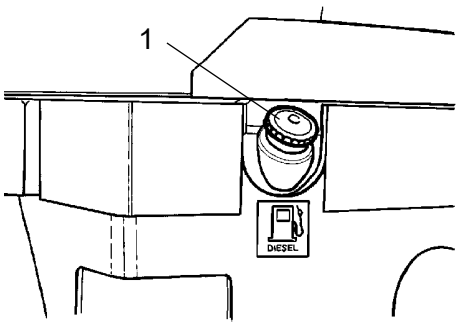

Fig. Fuel tank
1. Filler cap

Refuel every day before starting to work. Screw off the lockable tank cap (1) and fill diesel fuel to the lower edge of the filler pipe.

Stop the diesel engine. Short-circuit (press) the filler gun against a non-insulated part of the roller before refuelling, and against the filler pipe while refuelling.

Never refuel while the engine is running. Do not smoke and avoid spilling fuel.

The fuel tank holds 50 liters.

Water tank - Filling

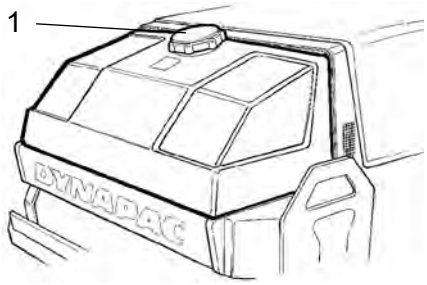

Fig. Water tank
1. Tank cap

Unscrew the tank cap (1) and fill with clean water. Do not remove the strainer. See technical specifications for the tank volume.

Only additive: A small amount of environment-friendly antifreeze.

Sprinkler system/Drum
Checking - Cleaning

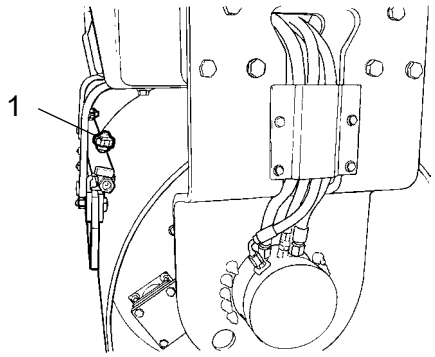

Fig. Drum
1. Nozzle

Start the sprinkler system and make sure that no nozzles (1) are clogged. If necessary, clean clogged nozzles and the coarse filter located by the water pump; see figures below.

The sprinkler system should be drained if there is a risk of freezing.

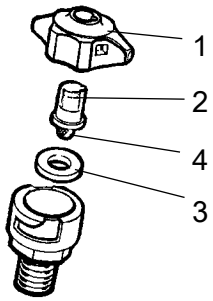

Fig. Nozzle
1. Sleeve
2. Nozzle
3. Gasket
4. Strainer

Dismantle the blocked nozzle by hand. Blow the nozzle (2) and fine filter (4) clean with compressed air, or install replacement parts and clean the clogged parts later.

Wear protective goggles when working with compressed air.

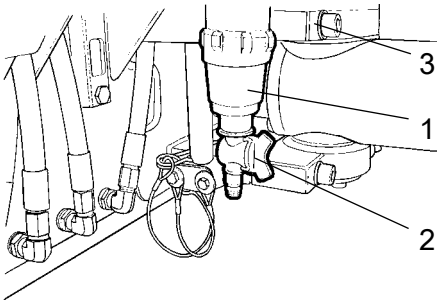

Fig. Pump system
1. Water filter
2. Stop cock
3. Water pump

When cleaning the coarse filter (1), open the cock (2) and loosen the filter housing.

Clean the filter and filter housing. Check that the rubber gasket in the filter housing is intact.

After inspecting and carrying out any necessary cleaning, start the system and check that it works.

A drain cock is placed on the left side of the pump system area. This can be used to drain the tank and the pump system.

Scrapers, fixed
Checking - Setting

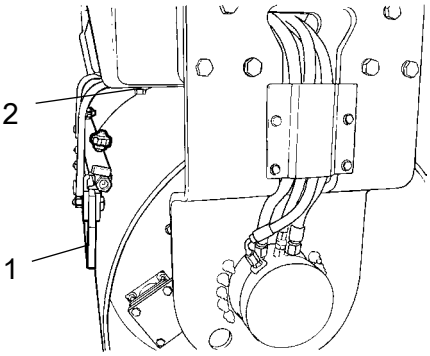

Fig. Drum
1. Scraper blade
2. Adjusting screws

Make sure that the scrapers are undamaged. Adjust the scrapers so that they are 1-2 mm from the drum. For special asphalt compounds, it may be better if the scraper blades (1) lie lightly against the drums.

Asphalt remnants can accumulate on the scraper and affect the contact force. Clean as required.

Loosen the screws (2) to adjust the contact pressure of the scraper blade against the drum.

Remember to tighten all the screws after any adjustment.

Scrapers, spring-action (Optional) Checking - Adjustment

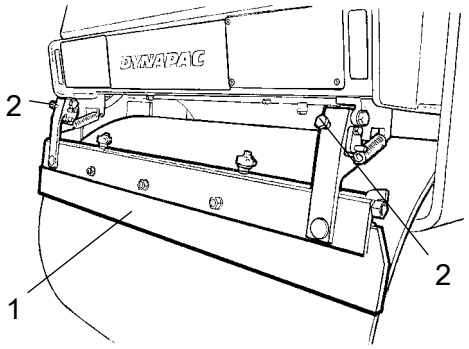

Fig. Spring-action scrapers
1. Scraper blade
2. Adjusting screws

The scrapers must be lifted from the drum during transport.

Brakes - Check

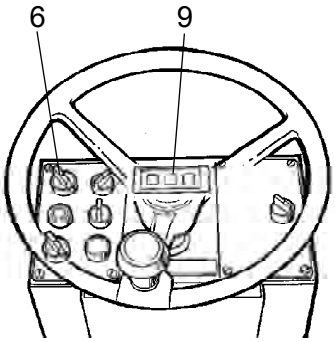

Fig. Instrument panel
6. Parking brake knob
9. Brake warning lamp

Check the operation of the brakes as follows:

Drive the roller slowly forward.

Turn the knob (6) to the **right**. The brake warning lamp (9) on the instrument panel should now go on, and the roller should stop.

After testing the brakes, set the Forward/reverse lever (2) in neutral.

Reset the knob (6) to the **left**.

The roller is now ready for operation.

Maintenance - 50h

Park the roller on a level surface. The engine must be switched off and the parking brake activated when checking or adjusting the roller, unless otherwise specified.

Ensue that there is good ventilation (air extraction) if the engine is run indoors. Risk of carbon monoxide poisoning.

Air cleaner
Check - Replacement of main filter

Replace the air cleaner's main filter when the indicator shows red. The indicator is mounted on the air cleaner's connecting pipe.

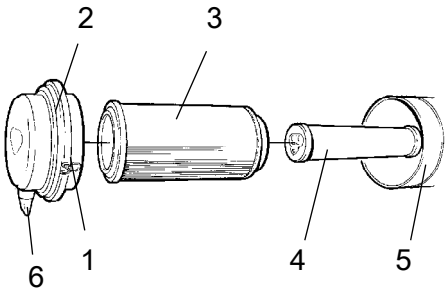

Fig. Air cleaner
1. Clips
2. Cover
3. Main filter
4. Backup filter
5. Filter housing
6. Dust valve

Release the clips (1), pull off the cover (2), and pull out the main filter (3).

Do not remove the backup filter (4).

Clean the air cleaner if necessary, see section Air cleaner - Cleaning.

When replacing the main filter (3), insert a new filter and refit the air cleaner in the reverse order.

Check the condition of the dust valve (6); replace if necessary.

When refitting the cover, make sure that the dust valve is positioned downwards.

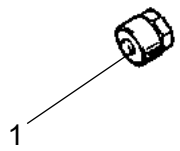

Fig. Indicator
1. Button

Air filter indicator - Resetting

The air filter indicator is located on the filter, or in its immediate vicinity.

The air filter indicator must be reset after replacing the air filter.

Press the "button" (1) on the top of the indicator to reset.

Backup filter - Change

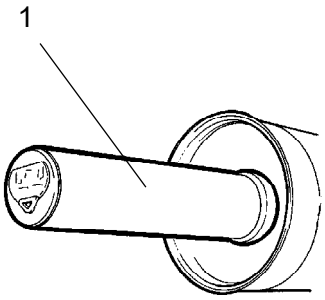

Fig. Air filter
1. Backup filter

Change the backup filter with a new filter after every third replacement of the main filter.

To change the backup filter (1), pull the old filter out of its holder, insert a new filter and reassemble the air cleaner in the reverse order.

Clean the air cleaner if necessary, see section Air cleaner - Cleaning.

Air cleaner - Cleaning

Wipe clean the inside of the cover (2) and the filter housing (5). See the previous illustration.

Wipe clean on both sides of the outlet pipe.

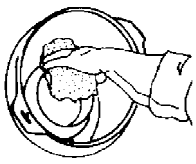

Inner edge of outlet pipe.

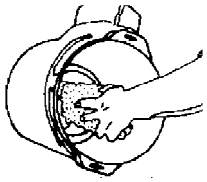

Outer edge of outlet pipe.

Wipe also both surfaces for the outlet pipe; see adjacent figure.

Check that the hose clamps between the filter housing and the suction hose are tight and that the hoses are intact. Inspect the entire hose system, all the way to the engine.

Steering cylinder and steering joint - Lubrication

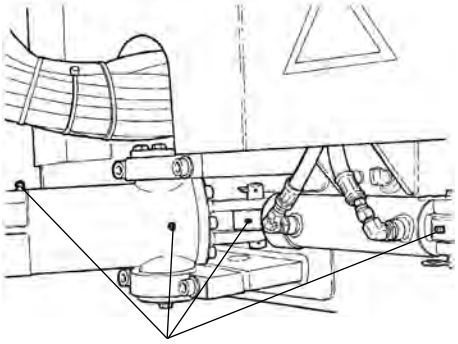

Fig. Main filter
1. Grease nipples

Do not allow anyone to remain in the vicinity of the steering joint when the engine is running. Danger of crush injury when the steering is operated. Activate the parking brake before lubricating.

Turn the steering wheel fully to the left. All four grease nipples (1) can now be accessed from the right side of the machine.

Wipe the grease nipples (1). Grease each nipple with five strokes of the hand-operated grease gun. Make sure that grease penetrates into the bearing. If grease does not penetrate the bearings, it may be necessary to relieve the articulation joint with a jack while repeating the greasing process.

Maintenance - 250h

Park the roller on a level surface. The engine must be switched off and the parking brake activated when checking or adjusting the roller, unless otherwise specified.

Ensue that there is good ventilation (air extraction) if the engine is run indoors. Risk of carbon monoxide poisoning.

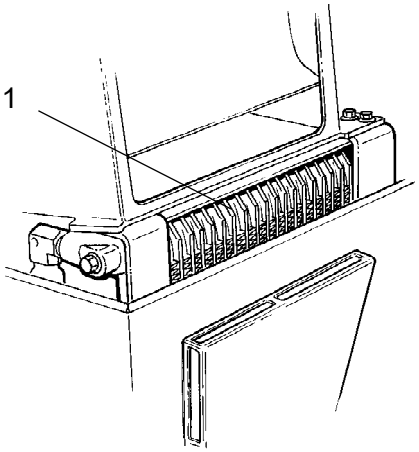

Fig. Engine compartment
1. Hydraulic fluid cooler

Hydraulic fluid cooler
Checking - Cleaning

Make sure that the air flow through the cooler is unobstructed. Dirty coolers are blown clean with compressed air or washed clean using a high-pressure water cleaner.

Blow air or direct water through the cooler in the opposite direction to that of the cooling air.

Take care when using a high-pressure water jet. Do not hold the nozzle too near the cooler.

Wear protective goggles when working with compressed air or high-pressure water jets.

Battery - Checking electrolyte level

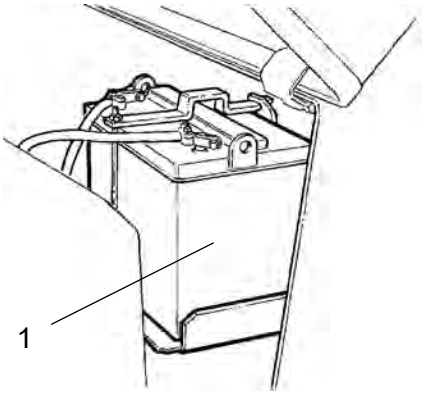

Fig Battery compartment
1. Battery

Open the hood.

Wipe the top of the battery.

Wear safety goggles. The battery contains corrosive acid. In the event of contact with the acid, rinse with water.

Make sure there are no naked flames in the vicinity when checking the electrolyte level. Explosive gas is formed when the alternator is charged.

When disconnecting the battery, always disconnect the negative cable first. When connecting the battery, always connect the positive cable first.

The cable shoes should be clean and well-tightened. Corroded cable shoes should be cleaned and greased with acid-free Vaseline.

Battery (maintenance-free)

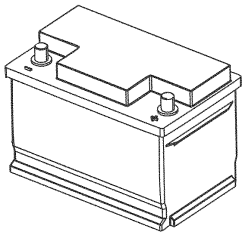

Fig. Battery

The battery is sealed and maintenance-free.

Make sure there is no open flame in the vicinity when checking the electrolyte level. Explosive gas is formed when the alternator charges the battery.

When disconnecting the battery, always disconnect the negative cable first. When connecting the battery, always connect the positive cable first.

The cable shoes should be clean and well-tightened. Corroded cable shoes should be cleaned and greased with acid-free Vaseline.

Wipe the top of the battery.

Maintenance - 500h

Park the roller on a level surface. The engine must be switched off and the parking brake activated when checking or adjusting the roller, unless otherwise specified.

Ensue that there is good ventilation (air extraction) if the engine is run indoors. Risk of carbon monoxide poisoning.

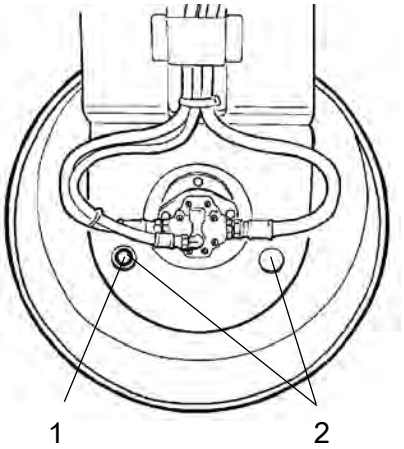

Fig. Drum, vibration side
1. Oil plug
2. Inspection hole

Drum - oil level
Inspection - filling

Run the roller slowly until the oil plug (1) is opposite one of the inspection holes (2).

Unscrew the plug and check that the oil level reaches up to the bottom of the hole. Top up with new oil if necessary. Use oil as per the lubricant specification.

Clean the magnetic oil plug (1) from any metallic residue, and refit the plug.

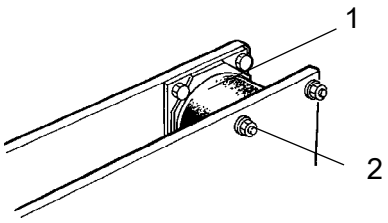

Fig. Drum, vibration side
1. Rubber element
2. Attachment screws

Rubber elements and attachment screws Check

Check all rubber elements (1). Replace all elements where more than 25% of the elements on one side of the drum have cracks deeper than 10-15 mm (0.4-0.6 in).

Check using a knife blade or pointed object.

Check also that the attachment screws (2) are tightened.

Hydraulic reservoir cap - Check

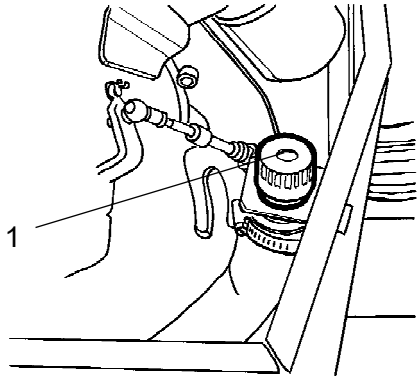

Fig. Engine compartment
1. Filler cap

Screw off the tank cap and check that it is not clogged. Air must have unobstructed passage through the cap in both directions.

If clogged in either direction, clean with a little diesel oil and blow with compressed air until free passage is assured or replace the cap with a new one.

Wear protective goggles when working with compressed air.

Controls - Lubrication

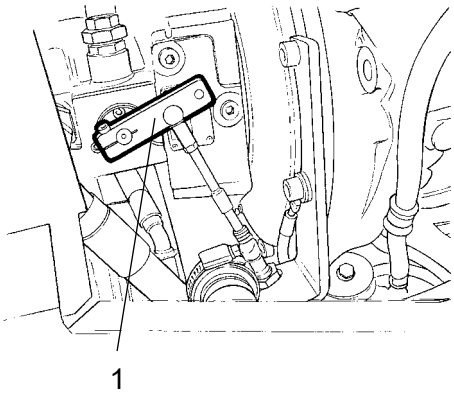

Fig. Engine compartment
1 Forward/Reverse lever

Lubricate the forward/reverse lever in the engine compartment with a few drops of oil.

If the lever gets stiff after a prolonged period of use, remove the cover and lever and lubricate.

Controls - Lubrication

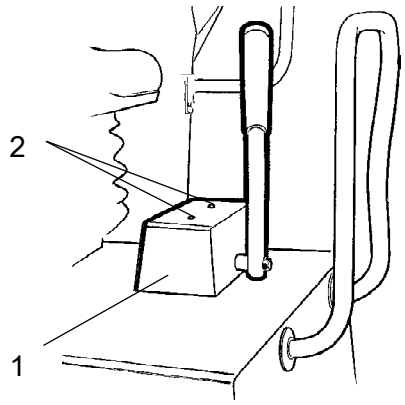

Fig. Driver seat
1. Forward/Reverse lever
2. Attachment screws

Lubricate the forward/reverse lever mechanism.

Remove the cover (1) by loosening the screws (2) on the top, and lubricate the mechanism under the cover with oil.

Diesel engine - Oil change

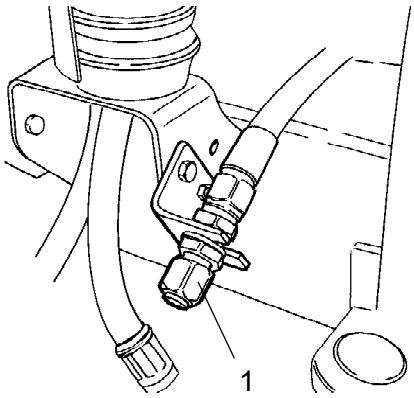

Fig. Engine compartment, right side
1. Draining the oil

Run the engine warm before draining the oil.

Place a receptacle that holds at least 8 liters (2 gal) under the drain plug.

Take great care when draining engine oil. Wear protective gloves and goggles.

Unscrew the drain plug (1). Allow all the oil to drain out and refit the plug.

Fill with new engine oil; see Lubricant specification or the engine manual for the correct grade of oil.

Check the dipstick to make sure that the oil level in the engine is correct. For further details, refer to the engine manual.

Oil filter - Replacement

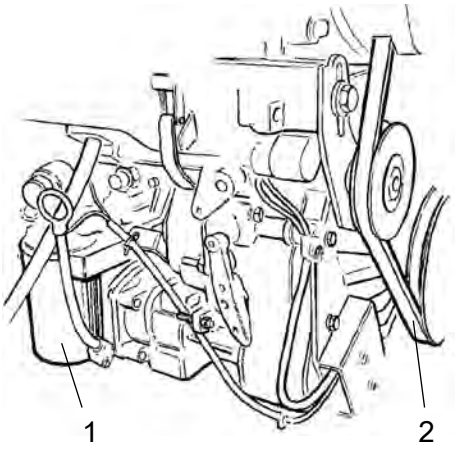

Fig. Diesel engine
1. Oil filter
2. V-belt

Remove the oil filter (1). Scrap this, and fit a new one.

Check that the belt (2) is not cracked or otherwise damaged. Replace if necesssary.

Check the belt tension. Tension the belt if it can be pressed in with the thumb more than 10 mm midway between the pulleys.

Refer to the engine manual for detailed instructions when changing the oil and filters, and for belt tensioning.

Start the engine and check that the filter and drain plug are well sealed.

Maintenance - 1000h

Park the roller on a level surface. The engine must be switched off and the parking brake activated when checking or adjusting the roller, unless otherwise specified.

Ensue that there is good ventilation (air extraction) if the engine is run indoors. Risk of carbon monoxide poisoning.

Replacing the hydraulic oil filter

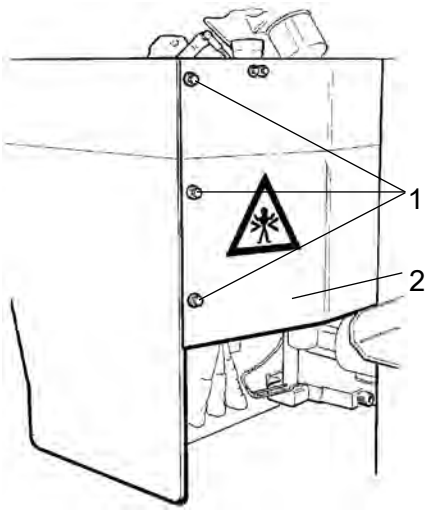

Fig. Engine compartment
1. Attachment screws
2. Protective plate

Loosen the six screws (1).

Remove the protective plate (2).

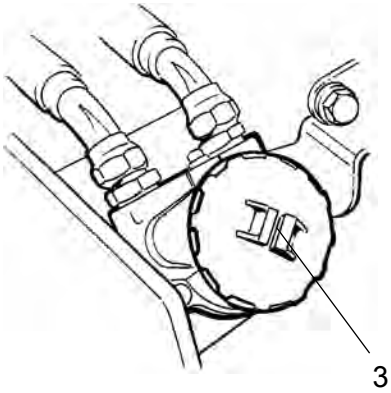

Fig. Hydraulic oil filter
3. Cap

Loosen the red cap (3) and pull up the filter insert (4).

Refit the red cap temporarily to prevent dust and dirt getting into the tank.

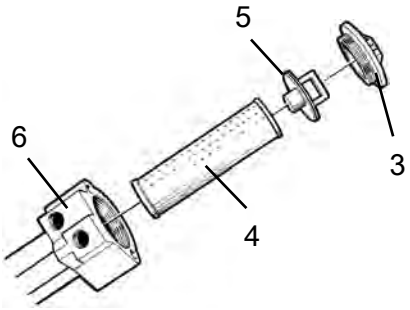

Fig. Hydraulic oil filter
3. Cap
4. Filter insert
5. Handle
6. Filter holder

Release the filter insert (4) from the handle (5).

Remove the filter (4) and hand in to an environment-friendly waste disposal station. This is a disposable filter and cannot be cleaned.

Mount the new insert on the handle, refit the unit into the filter holder (6), and refit the red cover.

Start the engine and allow it to run at full revs for 30 seconds. Check that the filter cap (3) is tight.

Hydraulic fluid reservoir - Draining

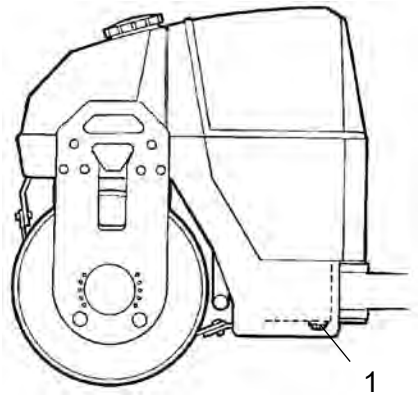

Fig. Left frame side
1. Drain plug

Condensate in the hydraulic tank is drained via the plug (1). This should be done when the roller has stood still for some time, e.g. during the night.

Be very careful during draining. Do not drop the plug or else all the hydraulic fluid will flow out.

Drain as follows:

Place a container under the plug (1). Loosen and allow any condensate to run out. Tighten the plug.

Replacing the fuel filter

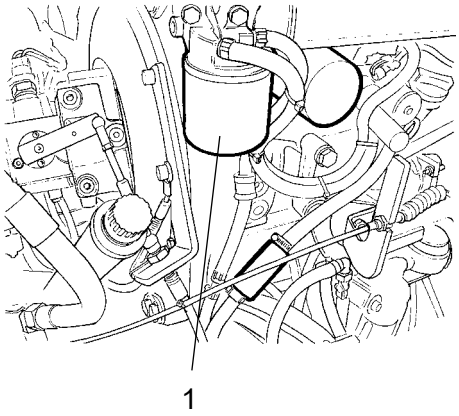

Fig. Engine compartment
1. Fuel filter

Place a container underneath to collect fuel that runs out when the filter is released.

Screw off the fuel filter (1). The filter is of the disposable type and cannot be cleaned. Hand in to environment-friendly station.

Refer to the engine manual for detailed instructions when replacing the fuel filter.

Start the engine and check that the fuel filter is tight.

Ensure good ventilation (air extraction) if the diesel engine is run indoors. Risk of carbon monoxide poisoning.

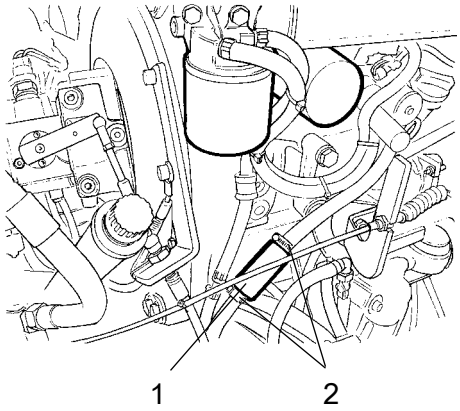

Fig. Engine compartment
1. Pre-filter
2. Hose clamps

Replacing the pre-filter

Activate the parking brake.
Switch off the engine and open the left engine compartment door.
Release the hose clips (2) with a screwdriver.

Place a container underneath to collect fuel that runs out when the filter is released.

Remove the pre-ilter (1) and hand in to environment-friendly station. This is a disposable filter and cannot be cleaned.

Fit a new pre-filter and tighten the hose clamps.

Start the engine and check that the pre-filter is tight.

Ensure good ventilation (air extraction) if the diesel engine is run indoors. Risk of carbon monoxide poisoning.

Maintenance - 2000h

Park the roller on a level surface.
The engine must be switched off and the parking brake activated when checking or adjusting the roller, unless otherwise specified.

Ensue that there is good ventilation (air extraction) if the engine is run indoors. Risk of carbon monoxide poisoning.

Hydraulic tank - Changing the fluid

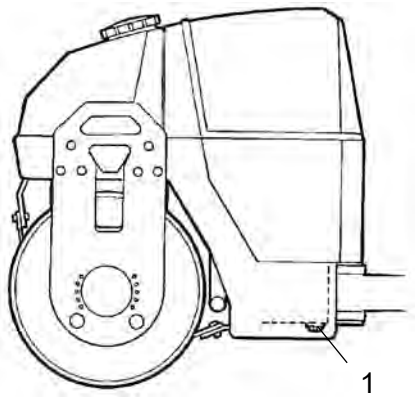

Fig. Left frame side
1. Drain plug

Risk of burn injuries when draining hot oil. Protect your hands.

Place a container under the plug. It should hold at least 40 liters. Save the oil and dispose of it in an approved manner.

Unscrew the drain plug (1) and allow all the oil to run out. Wipe and replace the drain plug.

Fill with fresh hydraulic fluid of the grade indicated in the Lubricant specification.

Replace the hydraulic fluid filter. See under the heading 'Every 1000 hours of operation'.

Start the diesel engine and run the various hydraulic functions. Check the fluid level in the tank, and top up if necessary.

Drum - Oil change

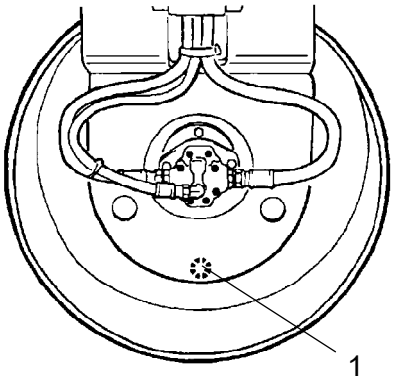

Fig. Drum, vibration side
1. Oil plug

Take great care when draining the fluid. Wear protective gloves and goggles.

Place the roller on a level surface and run it until the oil plug (1) points straight down.

Switch off the engine and activate the parking brake.

Place a container under the plug. It should hold at least 6 liters. Save the oil and dispose of it in an approved manner.

Remove the plug and allow all the oil to run out. See under the heading "Every 500 hours of operation" for filling oil.

Water tank - Draining

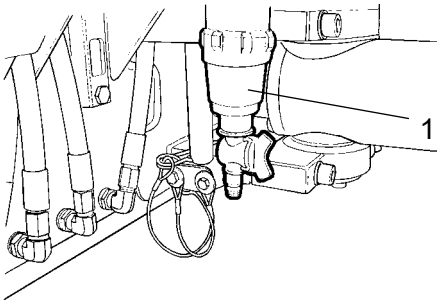

Fig. Pump system
1. Water filter

Remember that there is a risk of freezing during the winter. Empty the tank, pump and lines.

The easiest way to empty the water tank is to open the drain cock on the water filter (1). (There is also a drain plug under the water tank).

Water pump - Draining

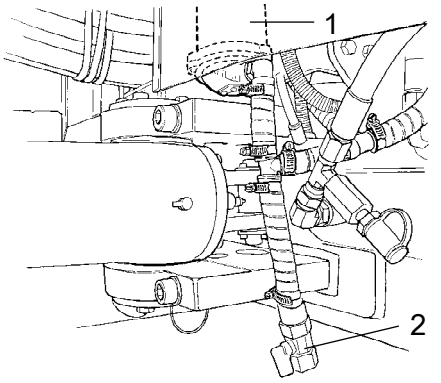

Fig. Pump system
1. Water pump
2. Drain cock

The water pump (1) is emptied by opening the drain cock (2).

Water tank - Cleaning

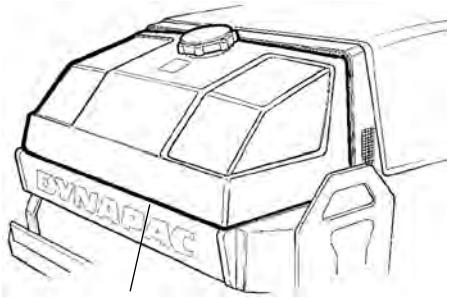

Fig. Water tank
1. Drain plug

Clean the tanks with water and a suitable detergent for plastic surfaces.

Refit the filter housing or the drain plug (1). Fill with water and check for leaks.

The water tanks are made of plastic (polyethylene) and are recyclable.

Fuel tank - Cleaning

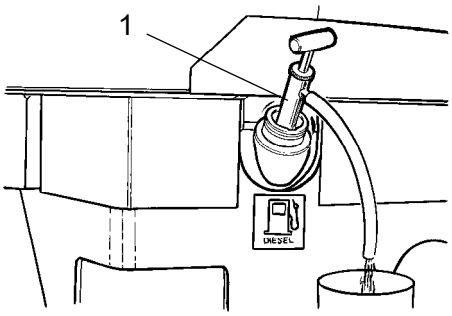

Fig. Fuel tank
1. Fuel tank

It is easiest to clean the tank when it is almost empty.

Pump out any bottom sediment using a suitable pump, such as an oil drain pump. Save the oil in a container and dispose of it in an approved manner.

Keep in mind fire risk when handling fuel.

The fuel tank is made of plastic (polyethylene) and is recyclable.

Steering joint - Check

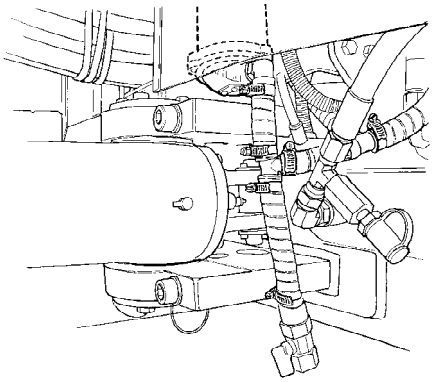

Fig. Steering joint

Check the steering joint for any damage or cracks.

Check and tighten any loose bolts.

Check also for any stiffness and play.

DYNAPAC

Part of the Atlas Copco Group

Dynapac Compaction Equipment AB
Box 504, SE-371 23 Karlskrona, Sweden

DYNAPAC

Part of the Atlas Copco Group

Dynapac Compaction Equipment AB
Box 504, SE-371 23 Karlskrona, Sweden