DYNAPAC
CA144D
SPARE PARTS CATALOGUE
SCA144D-US3EN2

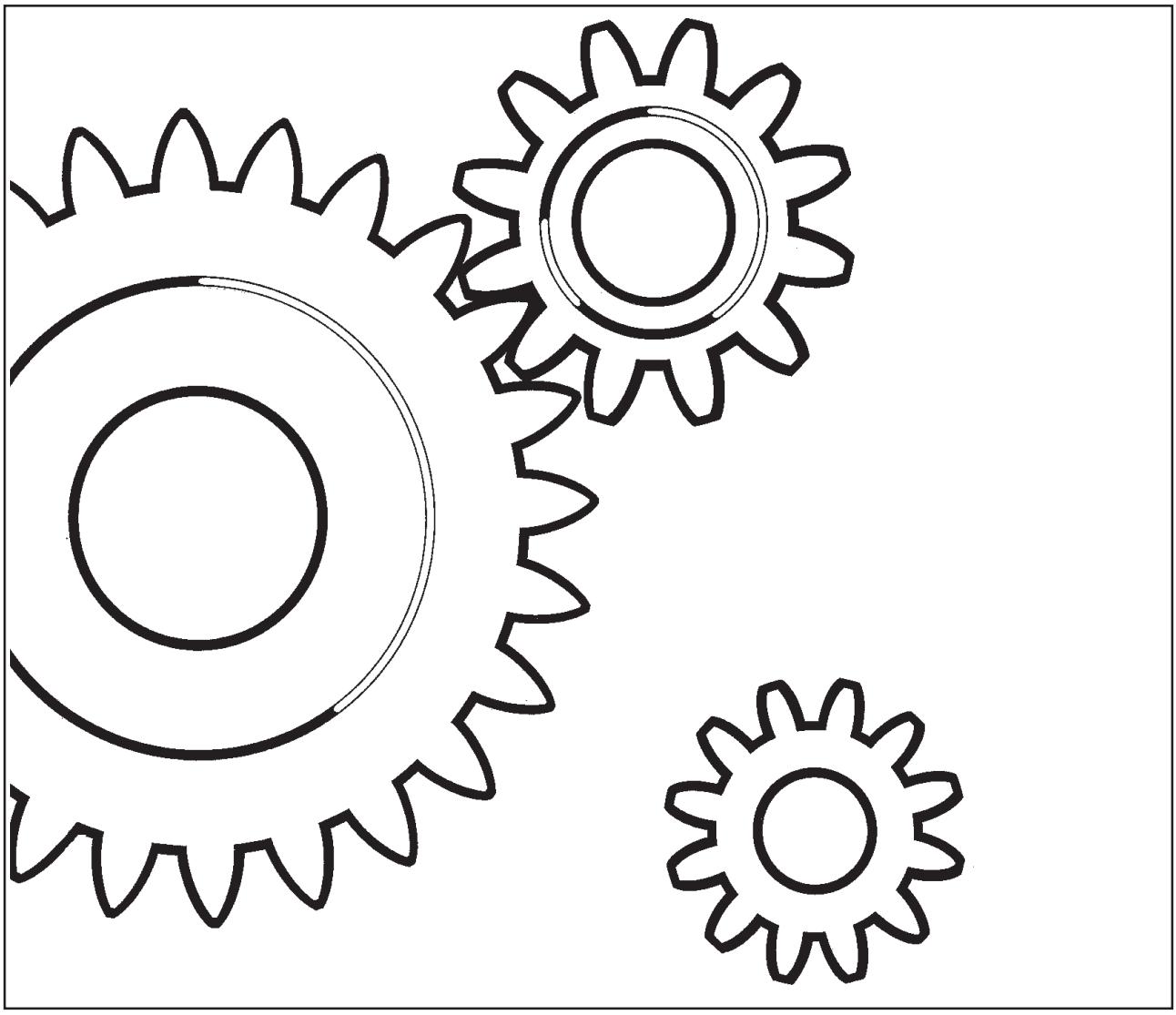

DYNAPAC
Part of the Atlas Copco Group

Box 504, SE-371 23 Karlskrona, Sweden
Phone: +46 455 30 60 00, Fax: +46 455 30 60 10
www.dynapac.com

DYNAPAC
Part of the Atlas Copco Group

Vibratory Roller
CA144D

Spare Parts Catalogue

SCA144D-US3EN2

Valid from roller serial number:

**8327US5300*-*

Diesel engine:

John Deere 5030HF285

Published catalogue issues valid for these rollers:

Catalogue	*Issue date*	*Valid for serial numbers*
SCA144D-US3EN1	*2008-10*	*Replaced by SCA144D-US3EN2*
SCA144D-US3EN2	*2009-04*	**8327US5300*-*

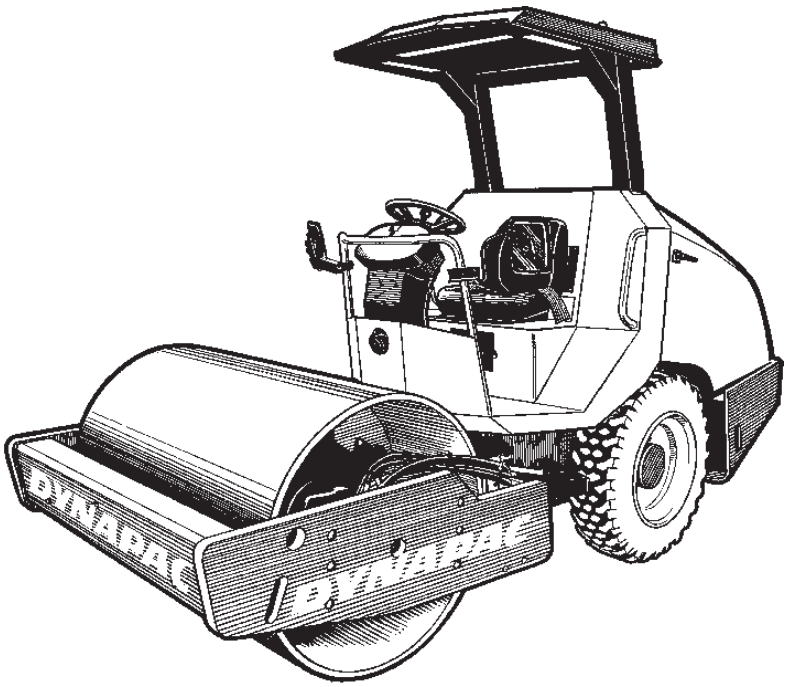

We reserve the right to change specifications without notice.
Printed in Sweden.

DYNAPAC
Part of the Atlas Copco Group

RESERVDELSBESTÄLLNING

Följande uppgifter ska lämnas vid beställning av reservdelar för att undvika leveransfel:

1. Maskintyp.
2. Vältens serienummer.
3. Antal av önskad reservdel.
4. Reserdelens artikelnummer.
5. Reservdelens benämning.
6. Måttuppgifter vid beställning av metervara.

ORDERING SPARE PARTS

To avoid errors in delivery, please give the following information when ordering spare parts:

1. Type of machine.
2. Roller serial number.
3. Quantity required.
4. Part number.
5. Parts denomination.
6. Dimensions when ordering per length.

ERSATZTEILBESTELLUNG

Zur Vermeidung von Fehllieferungen sind bei der Bestellung von Ersatzteilen folgende Angaben zu machen:

1. Maschinentyp.
2. Herstellungsnummer.
3. Bestellmenge. (Quantity)
4. Ersatzteilnummer. (Part Nº)
5. Ersatzteilbenennung. (Denomination)
6. Massangaben bei Bestellung von Meterware.

ORDINI DI RICAMBI

Per evitare errori nelle consegne di ricambi, Vi preghiamo di comunicarci le seguenti informazioni al momento dell 'ordinazione:

1. Tipo di macchina.
2. Numero di serie della macchina.
3. Quantità dei pezzi desiderati. (Quantity)
4. Numero di codice del pezzo. (Part Nº)
5. Descrizione del pezzo di ricambio. (Denomination)
6. Misura, in caso di ordine per metro.

PEDIDO DE RECAMBIOS

Para evitar errores en las entregas, deberán indicarse los siguientes datos al hacer un pedido de recambios:

1. Tipo de máquina.
2. Número de serie.
3. Cantidad de piezas deseadas. (Quantity)
4. Número de artículo de la pieza de recambio. (Part Nº)
5. Denominación de la pieza. (Denomination)
6. Indíquese la medida al solicitar un artículo que se expide por metros.

COMMANDE DE PIECES DE RECHANGE

Les indications suivantes doivent être fournies lors de la commande de piéces de rechange, afin d'éviter toute erreur de livraison:

1. Type de machine.
2. Numéro de série.
3. Quantité désirée de pièce de rechange. (Quantity)
4. Numéro de la piéce de rechange. (Part Nº)
5. Dénomination de la piéce de rechange. (Denomination)
6. Longueur en cas de commande au mètre.

YOUR AGENT/DEALER:

Text pages

The text pages is structured as the picture on the right.

1. This is the remarks for specific items and the descriptions of the remarks is at the bottom of the parts list.

2. Parts indicated by a dot and moved to the right are included when buying the assembled unit above.

3. Spare parts and service code for a specific part, mainly for internal use at Dynapac. "A" = Service part, "B" = Fast moving part, "C" = Suggested exchanged part and "D" = Regular spare part.

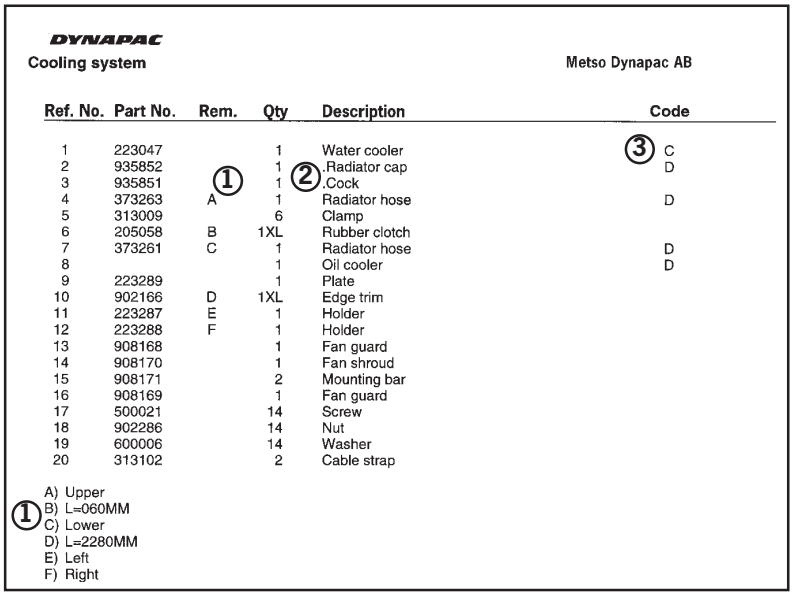

DYNAPAC

Cooling system — Metso Dynapac AB

Ref. No.	Part No.	Rem.	Qty	Description	Code
1	223047		1	Water cooler	③ C
2	935852		1	.Radiator cap	D
3	935851	①	1	②.Cock	
4	373263	A	1	Radiator hose	D
5	313009		6	Clamp	
6	205058	B	1XL	Rubber clotch	
7	373261	C	1	Radiator hose	D
8			1	Oil cooler	D
9	223289		1	Plate	
10	902166	D	1XL	Edge trim	
11	223287	E	1	Holder	
12	223288	F	1	Holder	
13	908168		1	Fan guard	
14	908170		1	Fan shroud	
15	908171		2	Mounting bar	
16	908169		1	Fan guard	
17	500021		14	Screw	
18	902286		14	Nut	
19	600006		14	Washer	
20	313102		2	Cable strap	

① A) Upper
B) L=060MM
C) Lower
D) L=2280MM
E) Left
F) Right

Changes

PARTS INFO	SERVICE INFO	GROUP	PAGE	NOTES

Notes

Notes

PÄRMETIKETT

För att undvika fel vid reservdelsbeställning finns här nedan två etiketter som passar i fickorna på pärmarnas ryggar. På dessa kan man se från vilket vältnummer av aktuell maskin reservdelskatalogen gäller. Gör så här:

1. Tag denna sida ur pärmen.
2. Klipp ut etiketten till **VÄNSTER** (1) och sätt in den i fickan på **DENNA** pärmens rygg.
3. Finns det en etikett till **HÖGER** (2), kan denna användas på pärmen för **FÖREGÅENDE** utgåva av denna katalog.
4. Kasta detta papper.

BINDER LABEL

To avoid errors when ordering spare parts use the labels below to identify the catalogues on the back of the binder. The label contain the serial number range for which the catalogue is valid. Do like this:

1. Remove this page from the binder.
2. Cut out the **LEFT** label (1) and put it on **THIS** binders back.
3. If there is a label to the **RIGHT** (2), it can be used on the binder for **PRECEDING** issue of this catalogue.
4. Throw away this paper.

KATALOG-BESCHRIFTUNG

Zur Vermeidung von Fehlen bei der Ersatzteilbestellung benutzen Sie bitte die unteren Beschriftungen, um die Kataloge auf der Rückseite zu kennzeichen. Auf der Beschriftung ist angegaben, für welche Maschinennummern der jeweilige Katalog gültig ist. Ablauf:

1. Nehmen Sie dieses Blatt aus dem Katalog.
2. Schneiden Sie die **LINKE** Beschriftung (1) aus. Schieben Sie die Beschriftung in die tasche auf **DEM** Katalogrücke.
3. Sollte die Beschriftung unten **RECHTS** (2) mitgeliefert werden, kennzeichen Sie damit bitte die **ÄLTERE** Ausführung dieses Kataloges.
4. Den Rest dieses Blattes bitte vernichten.

ETICHETTA POSTA SUL RACCOGLITORE

Per evitare errori quando ordinate pezzi di ricambio, usate le etichette in calce che servono ad identificare i cataloghi sul retro del raccoglitore. L'etichetta indica il numero di matricola delle maccine prese in considerazione nel catalogo.

1. Rimuovete questa pagina dal raccoglitore.
2. Ritagliate l'etichetta posta a **SINISTRA** (1) e ponetela sul retro **DEL** raccoglitore.
3. Se trovate anche un'etichetta sulla **DESTRA** (2), ritagliatela e ponetela sul raccoglitore relativo alla **PRECEDENTE** edizione del catalogo.
4. Distruggete questo foglio.

ETIQUETA PARA LA CARPETA

Para evitar errores al pedir repuestos utilicen las etiquetas abajo descritas para identificar los catálogos en la parte trasera de la carpeta. En la etiqueta se ven los números de referencia de la serie para la cual es válido el catálogo. Instrucciones:

1. Quitar esta página de la carpeta.
2. Corta la etiqueta **IZQUIERDA** (1) y ponerla est **ESTA** carpeta en la parte trasera.
3. Si hay una etiqueta en la parte **DERECHA** (2) se puede utilizar en la carpeta para el catálogo que **PRECEDE** a esta.
4. Tirar esta hoja.

ETIQUETAGE DU CATALOGUE

Afin d'éviter des erreurs lors de commandes de pièces de rechange, nous vous conseillons d'apposer les marquages ci-dessous à l'arrière du classeur, pour identifier les catalogues. Ce marquage indique les numéros de série pour lesquels le catalogue est adapté. Il convient de procéder de la façon suivante:

1. Retirez cette page du classeur.
2. Découpez l'étiquette de **GAUCHE** (1), et apposez-la à l'arrière de **CE** catalogue.
3. Si il y a une étiquette à **DROITE** (2), vous pourrez l'apposer sur le classeur de l'edition **PRECEDENTE** du catalogue.
4. Détruire cetta feuille.

1.

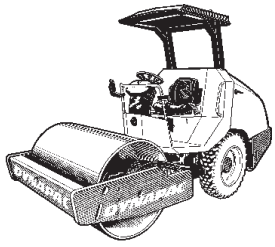

CA144D

Catalogue **SCA144D-US3EN2**

Valid **from** serial number:

***8327US5300* -**

TABLE OF CONTENTS

Page

CA144D SN 8327US5300 - 2

Service kits 4

Service kits 6
4700950404 Service kit 50 h 8
4700950405 Service kit 500 h 10
4700950406 Service kit 1000 h 12

Repair kits 14

Repair kits 16
4700950156 Steering hitch kit 18
4700950153 Eccentric shaft kit 20
4700950154 Drum rotation kit 22
4700938875 Shock absorber kit, drum 24

Frame 26

Frames and scrapers 28
Steering hitch 30
Structure 32
Noise suppression 34

Drum 36

Drum 38

Engine 40

Engine John Deere 5030HF285 Tier3 42
Cooling system 44
Combustion air system 46
Fuel system 48
Exhaust system 50

Transmission 52

Rear axle and wheels 54
Rear axle 56
Differential with limited slip 58
Differential housing and brakes 60
Planet gear 62

Hydraulic system 64

Propulsion system 66
4700378164 Propulsion pump 68
4700950578 Rotary group, cpl 70
4700950579 Valve block, cpl 72
4700950577 Control unit, hydraulic pump 74
4700378166 Hydraulic motor, propulsion 76
4700378143 Hydraulic motor Propulsion 78
Vibration system 80
4700378149 Vibration valve 82
4700378621 Hydraulic motor, vibration 84
Steering system 86
4700378153 Pilot valve 88
4700378187 Steering cylinder 90
Brake system 92
Flow divider Option 94
4700378302 Flow divider 96

TABLE OF CONTENTS

Page

Electrical equipment 98

Electric system 100
Electrical equipment, levelling blade 102
Control panel Up to ECN08360 104
Control panel From ECN08360 106
Working lights, ROPS and Rotating beacon 108
Driving and direction light 110

Drivers platform 112

Drivers platform 114
Forward and reverse control 118
Forward and reverse control handle 120
Rops and fops 122

Decals 124

Decals 126
Decals 128

Standard equipment 130

Standard equipment 132

Optional equipment 134

Levelling blade, metal parts 136
4700378187 Steering cylinder 90
Levelling blade, hydraulic parts 138
4700379133 Valve 140

CA144D SN 8327US5300 - CA134100

Item	Part No	Rem	Qty	Description	Code
1				Service kits (Page 4)	
2				Repair kits (Page 14)	
10				Frame (Page 26)	
20				Drum (Page 36)	
30				Engine (Page 40)	
40				Transmission (Page 52)	
50				Hydraulic system (Page 64)	
60				Electrical equipment (Page 98)	
70				Drivers platform (Page 112)	
80				Decals (Page 124)	
90				Standard equipment (Page 130)	
91				Optional equipment (Page 134)	

Service kits

Item	Part No	Rem	Qty	Description		Code
-1				Service kits (Page 6)		
10	4700950404			Service kit (Page 8)	50 h	
20	4700950405			Service kit (Page 10)	500 h	
30	4700950406			Service kit (Page 12)	1000 h	

Service kits

Item	Part No	Rem	Qty	Description	Code
10	4700950404			Service kit (Page 8) 50 h	
20	4700950405			Service kit (Page 10) 500 h	
30	4700950406			Service kit (Page 12) 1000 h	

4700950404 Service kit 50 h

18628

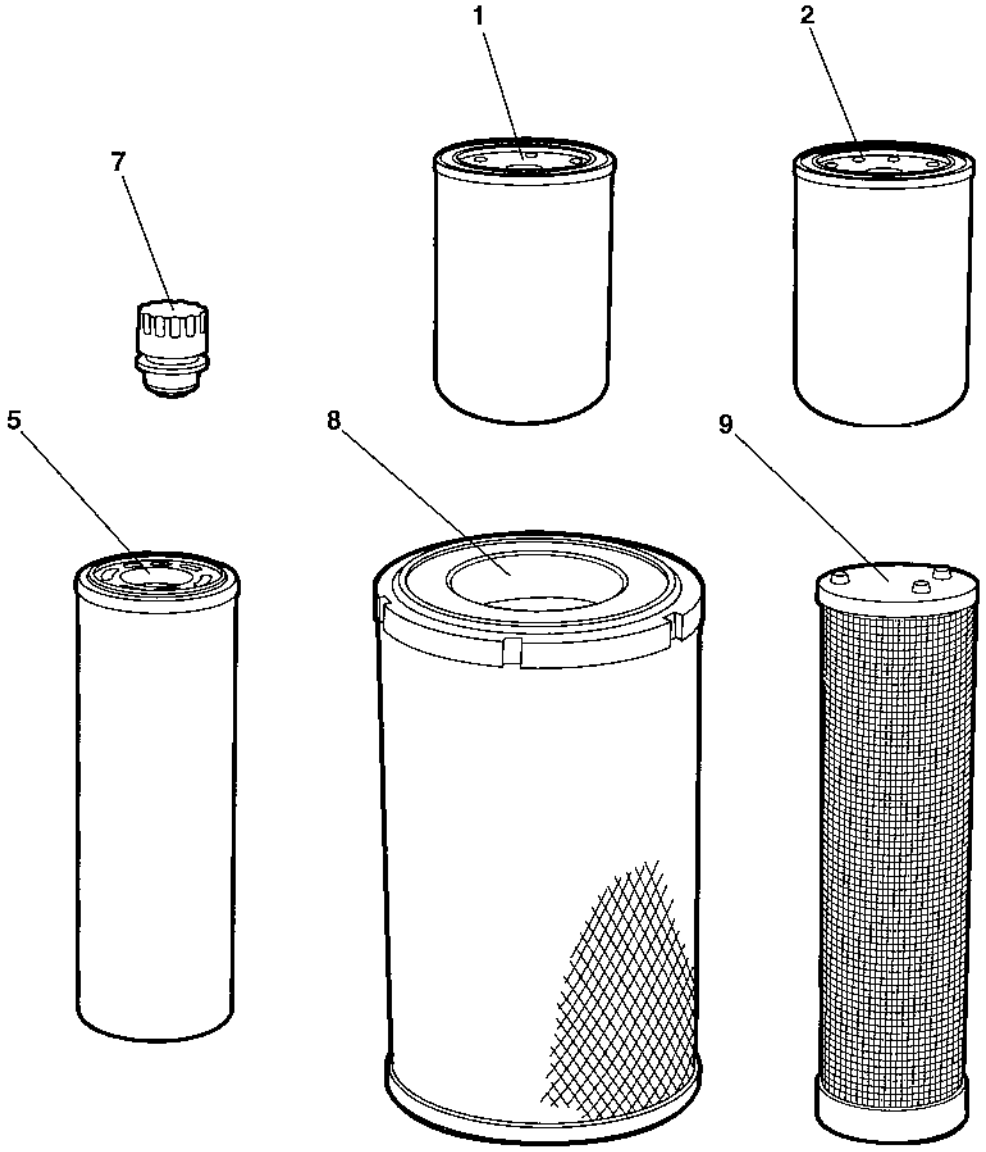

4700950404 Service kit 50 h

Item	Part No	Rem	Qty	Description		Code
	4700950404			Service kit (Page 8)	50 h	
1	4700940985		1	Oil filter element		A
2	4700950306		1	Fuel filter element		A
5	4700372229		1	Hydraulic oil filter element		A

4700950405 Service kit 500 h

18628

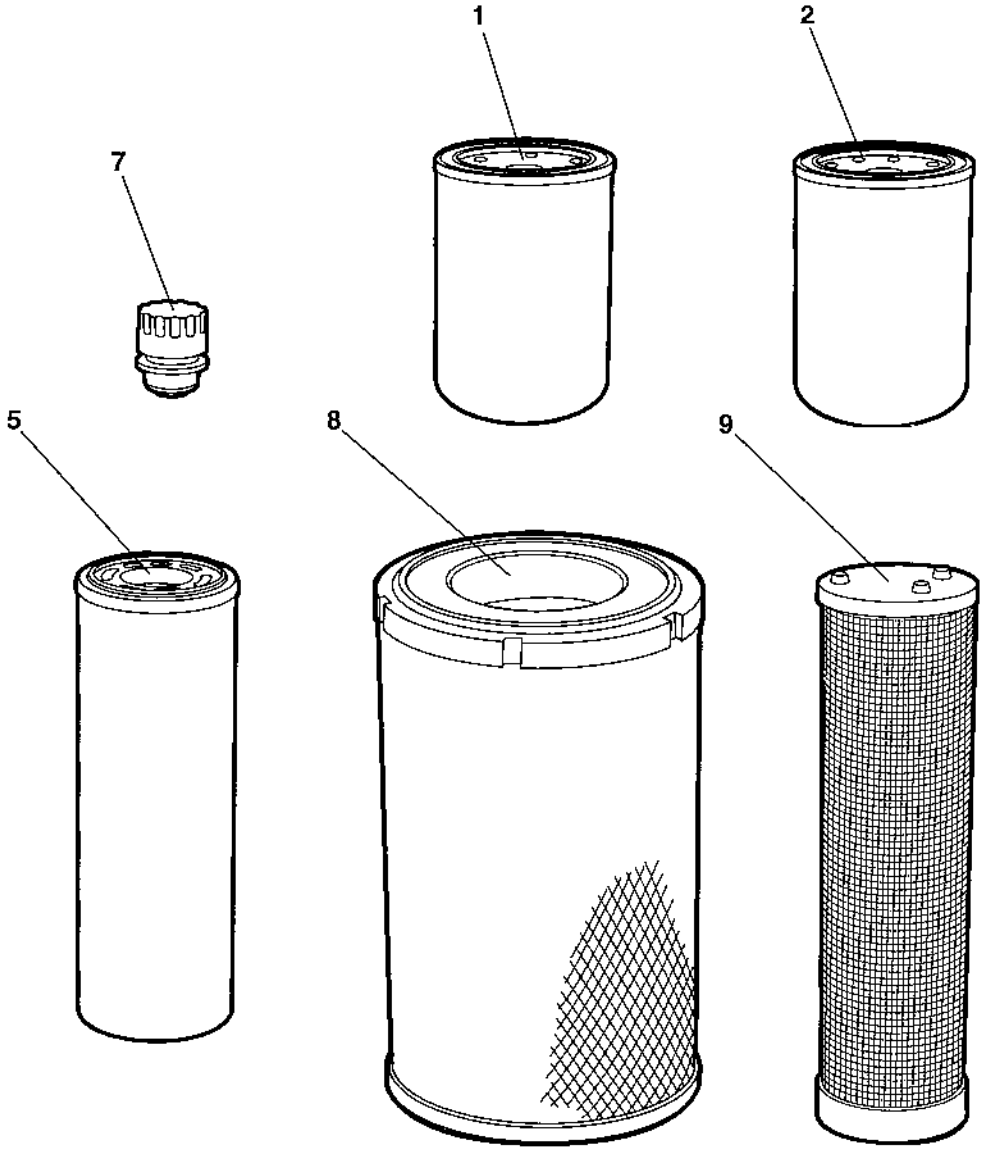

4700950405 Service kit 500 h

Item	Part No	Rem	Qty	Description		Code
	4700950405			Service kit (Page 10)	500 h	
1	4700940985		1	Oil filter element		A
2	4700950306		1	Fuel filter element		A
8	4700378736		1	Air filter element	Main	A

4700950406 Service kit 1000 h

18628

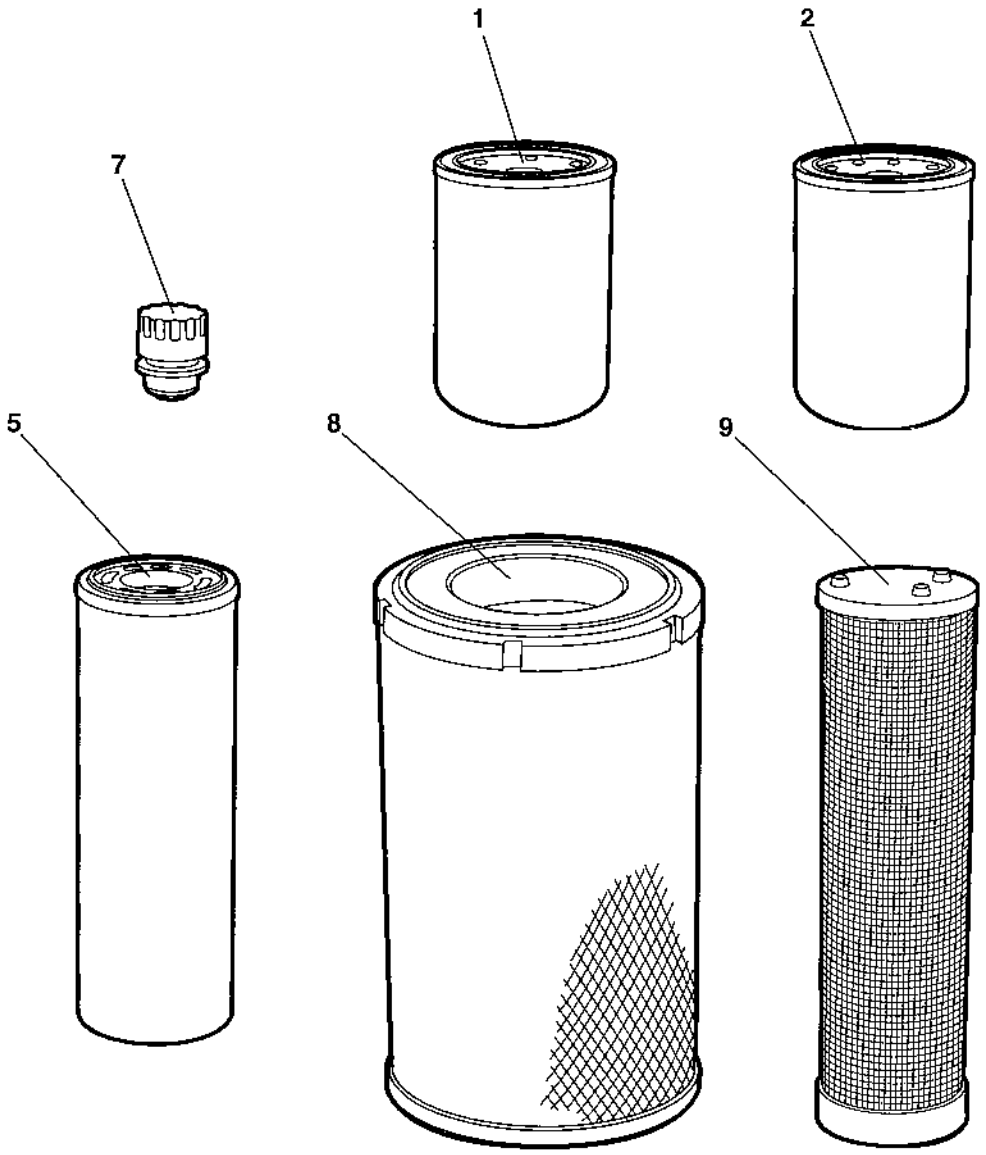

4700950406 Service kit 1000 h

Item	Part No	Rem	Qty	Description		Code
	4700950406			Service kit (Page 12)	1000 h	
1	4700940985		1	Oil filter element		A
2	4700950306		1	Fuel filter element		A
5	4700372229		1	Hydraulic oil filter element		A
7	4700357138	B	1	Ventilating filter		A
8	4700378736		1	Air filter element	Main	A
9	4700378735		1	Air filter element	Safety	A

B) Ventilated oil filler cap for the hydraulic oil tank

Repair kits

Item	Part No	Rem	Qty	Description	Code
-1				Repair kits (Page 16)	
20	4700950156			Steering hitch kit (Page 18)	
30	4700950153			Eccentric shaft kit (Page 20)	
40	4700950154			Drum rotation kit (Page 22)	
50	4700938875			Shock absorber kit, drum (Page 24)	

Repair kits

Item	Part No	Rem	Qty	Description	Code
20	4700950156			Steering hitch kit (Page 18)	
30	4700950153			Eccentric shaft kit (Page 20)	
40	4700950154			Drum rotation kit (Page 22)	
50	4700938875			Shock absorber kit, drum (Page 24)	

4700950156 Steering hitch kit

950156

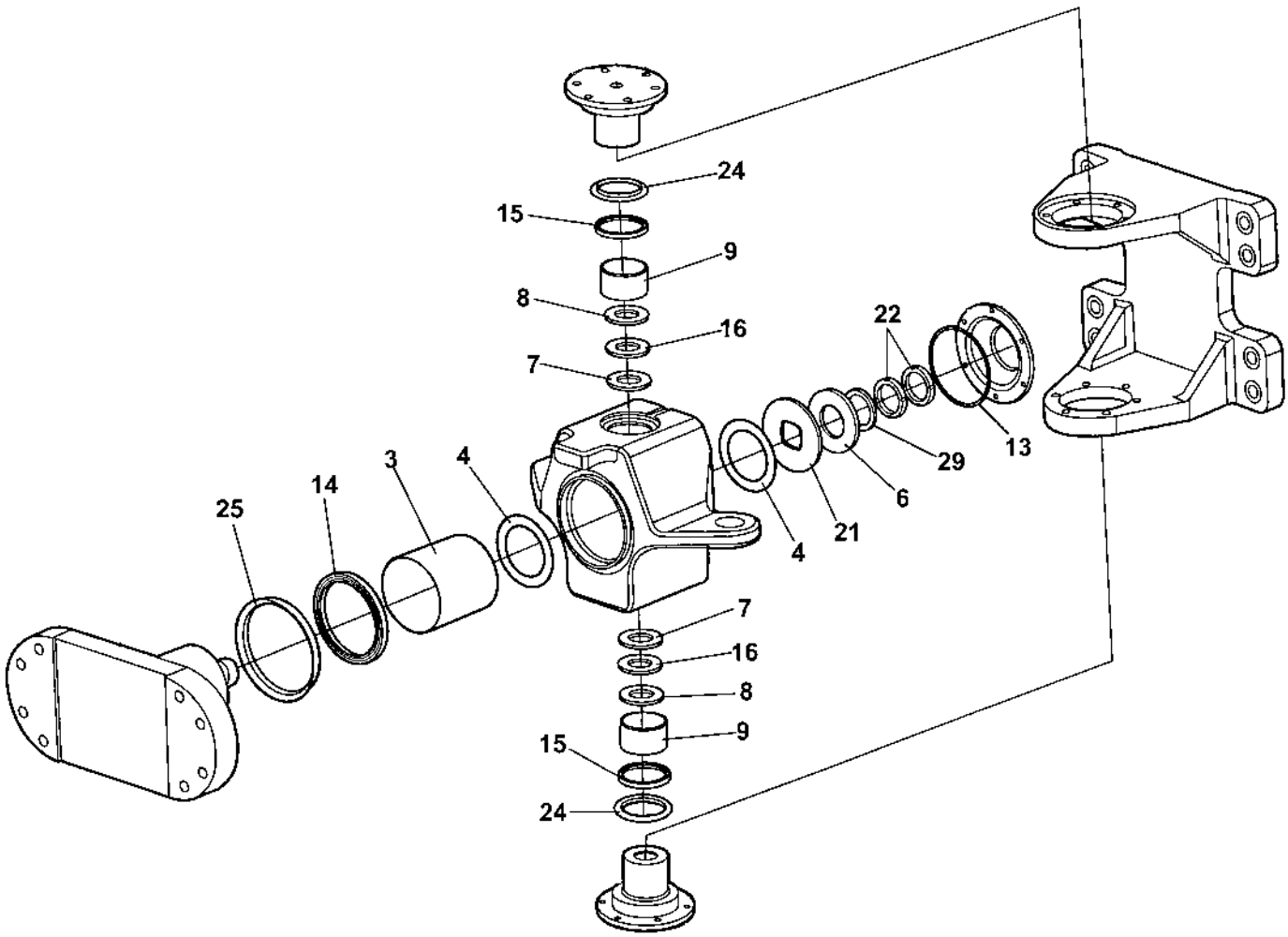

4700950156 Steering hitch kit

Item	Part No	Rem	Qty	Description		Code
	4700950156			Steering hitch kit (Page 18)		
3	4700378761		1	Bushing		
4	4700393561		2	Slide washer		
6	4700378765		1	Disc spring		
7	4700393562		2	Slide washer		
8	4700300016		2	Disc spring		
9	4700378762		2	Bushing		
13	4700160132		1	O-ring	124, 50x3, 00	D
14	4700378767		1	Radial lip-type seal		D
15	4700388173		2	Shear wiper		
16	4700392765		2	Wacher		
21	4700393087		1	Washer		
22	4700135007		2	Shaft nut		
24	4700792510		2	Radial lip-type seal		
25	4700167016		1	Sealing,	V-ring	D
	4700792511		1	Sealing,	V-ring	D
29	4700167018		1	Back-up ring		

4700950153 Eccentric shaft kit

950153

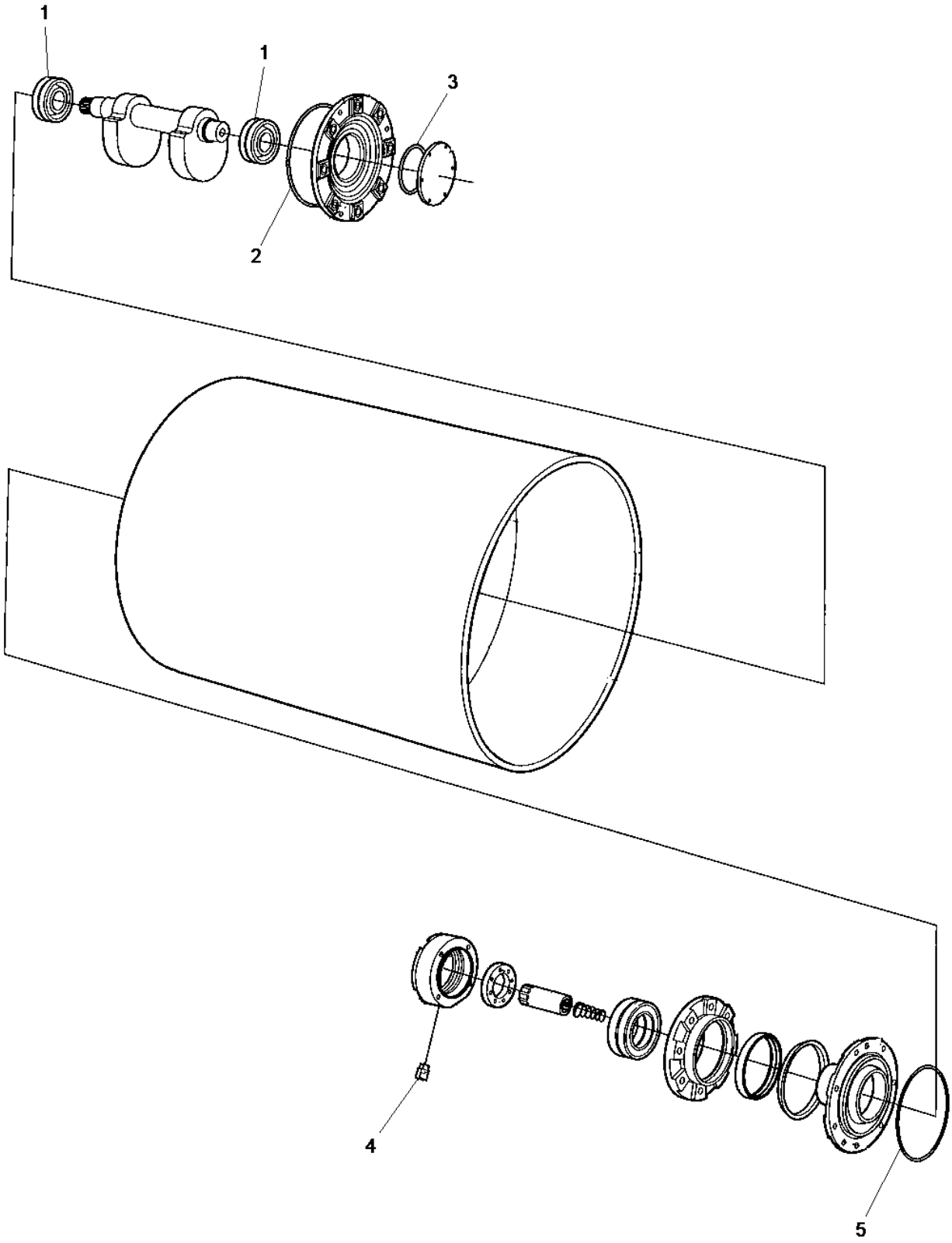

4700950153 Eccentric shaft kit

Item	Part No	Rem	Qty	Description	Code
	4700950153			Eccentric shaft kit (Page 20)	
1	4700114089		2	Spherical roller bearing	D
2	4700160344		1	O-ring 70	D
3	4700160040		1	O-ring	D
4	4700926736		1	Breather	B
5	4700160093		1	O-ring	D

4700950154 Drum rotation kit

RAMLAGER

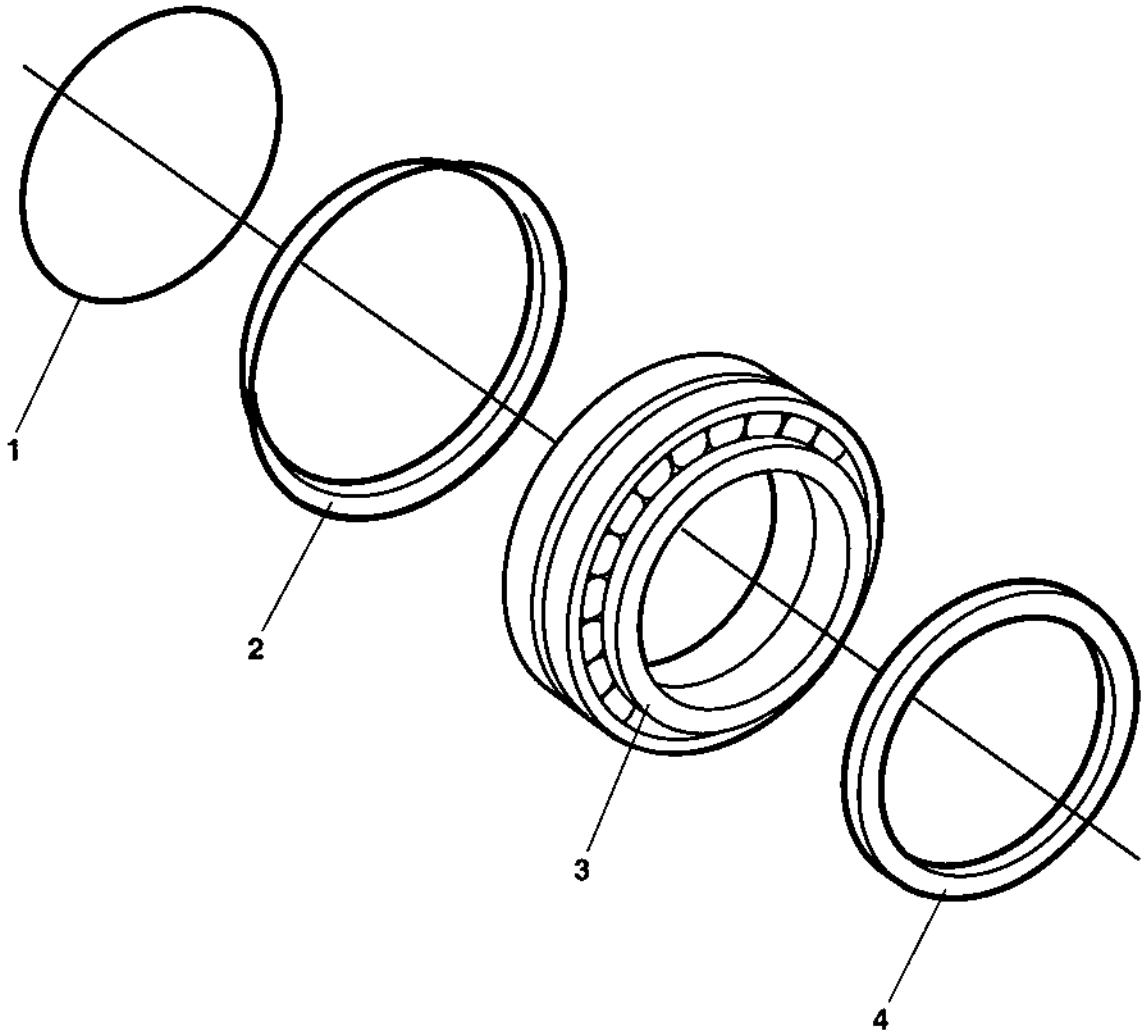

4700950154 Drum rotation kit

Item	Part No	Rem	Qty	Description	Code
	4700950154			Drum rotation kit (Page 22)	
2	4700929447		1	V-ring	D
3	4700116041		1	Taper roller bearing	D
4	4700386272		1	Sealing	D

4700938875 Shock absorber kit, drum

SHOCK ABSORB.

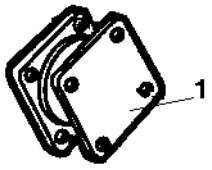

4700938875 Shock absorber kit, drum

Item	Part No	Rem	Qty	Description	Code
	4700938875			Shock absorber kit, drum (Page 24)	
1	4700336742		8	Shock absorber	B

Frame

Item	Part No	Rem	Qty	Description	Code
10				Frames and scrapers (Page 28)	
15				Steering hitch (Page 30)	
20				Structure (Page 32)	
21				Noise suppression (Page 34)	

Frames and scrapers

18333-1

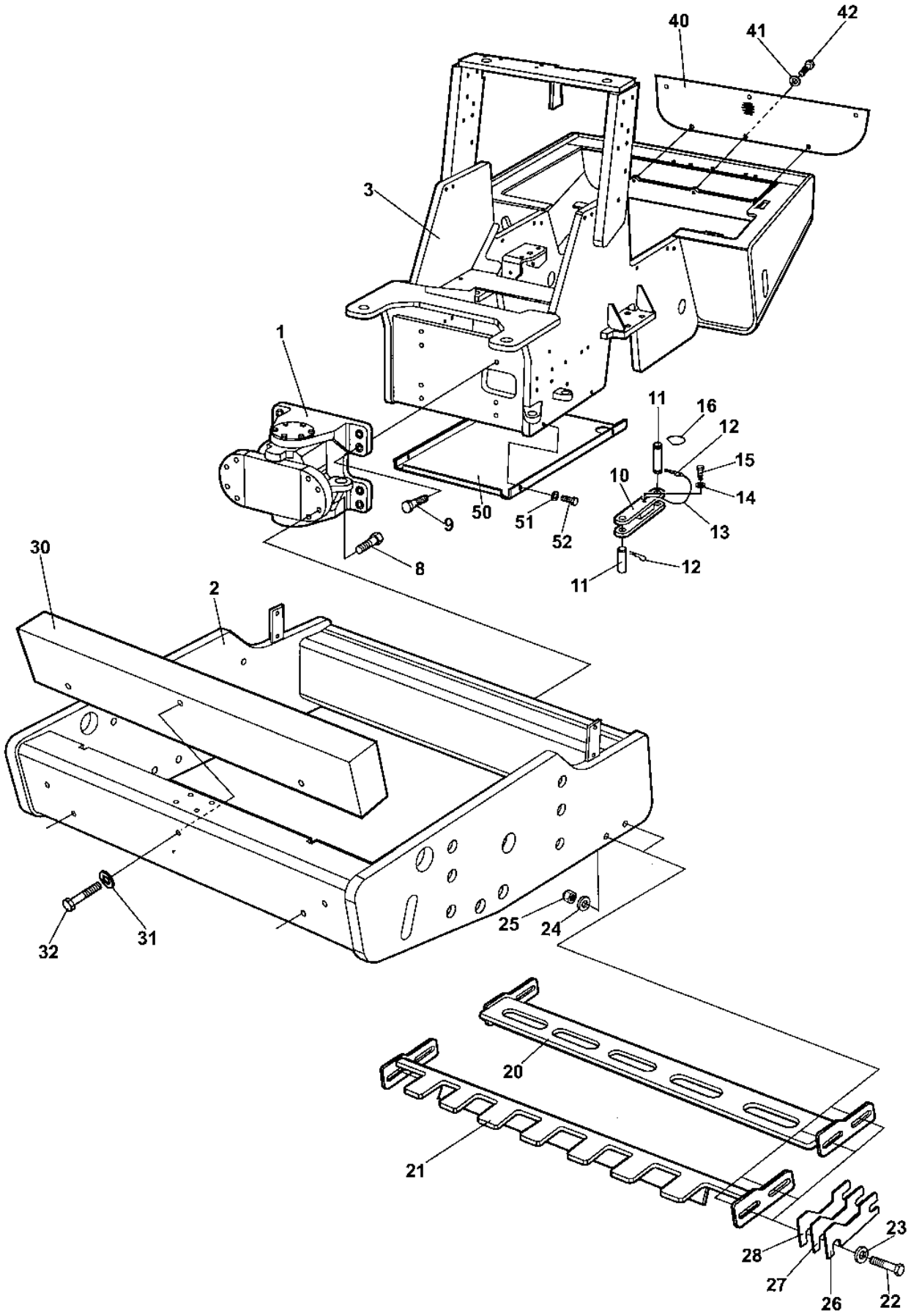

Frames and scrapers

Item	Part No	Rem	Qty	Description		Code
1			1	Steering hitch		
2	4700390420		1	Drum frame		
3	4700378125		1	Tractor frame		
8	4700500165		8	Screw	M16-2,0x75 8,8	
9	4700500134		8	Screw		
10	4700374744		1	Safety rod		
11	4700347119		2	Shaft		D
12	4700635061		3	Hair clip		D
13	4700343775		2	Wire		
14	4700904230		2	Washer		
15	4700500043		2	Screw	M10x16H 8,8	
16	4700357488		1	Spring		
20	4700391265		1	Scraper		
21				Not used on this model		
22	4700500133		4	Screw		
23	4700904231		4	Washer	13x24x2 300 HV	
24	4700904703		4	Washer		
25	4700586019		4	Lock nut		
26	4700378878		N	Shim	T=3MM	
27	4700378879		N	Shim	T=2MM	
28	4700378880		N	Shim	T=1MM	
30				Not used on this model		
31				Not used on this model		
32				Not used on this model		
40	4700390425		1	Protection plate		
41	4700904228		6	Washer		
42	4700500013		6	Screw	M6-1x16 8,8	
50	4700379666		1	Air inlet plate		
51	4700904230		4	Washer		
52	4700500048		4	Screw	M10-1,5x20 8,8	

Steering hitch

18654

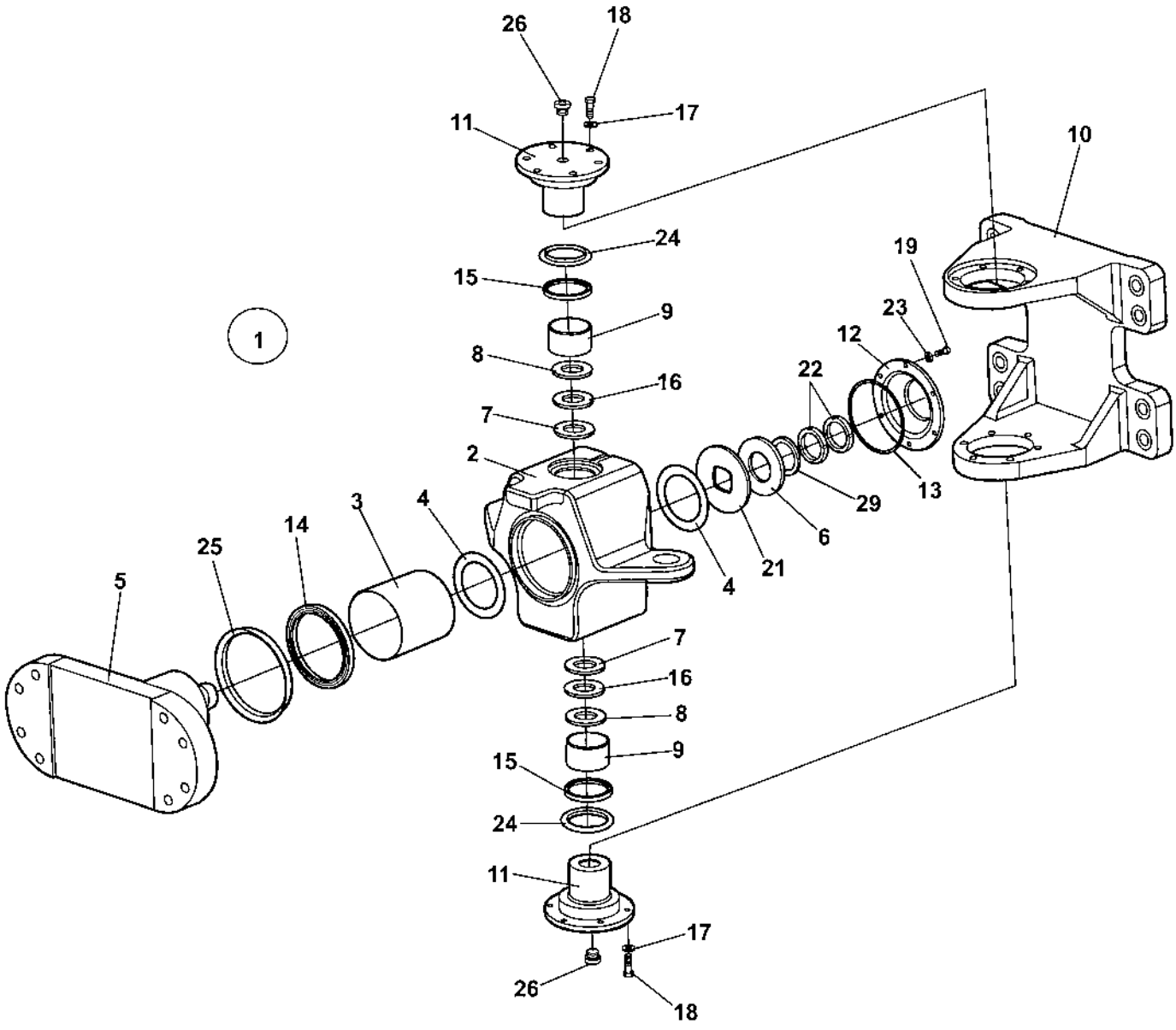

Steering hitch

Item	Part No	Rem	Qty	Description		Code
1	4700393436		1	Steering hitch		
2	4700393969		1	.Hitch yoke		
3	4700378761		1	.Bushing		
4	4700393561		2	.Slide washer		
5	4700393599		1	.Shaft		
6	4700378765		1	.Disc spring		
7	4700393562		2	.Slide washer		
8	4700300016		2	.Disc spring		
9	4700378762		2	.Bushing		
10	4700377785		1	.Holder		
11	4700377786		2	.Shaft		
12	4700393438		1	.Cover		
13	4700160132		1	.O-ring	124, 50x3, 00	D
14	4700378767		1	.Radial lip-type seal		D
15	4700388173		2	.Shear wiper		
16	4700392765		2	.Wacher		
17	4700904230		12	.Washer		
18	4700500029		12	.Screw		
19	4700500012		6	.Screw	M6x12	
21	4700393087		1	.Washer		
22	4700135007		2	.Shaft nut		
23	4700904228		6	.Washer		
24	4700792510		2	.Radial lip-type seal		
25	4700792511		1	.Sealing,	V-ring	D
26	4700792295		2	.Steel plug		
29	4700167018		1	.Back-up ring		

Structure

18345-1

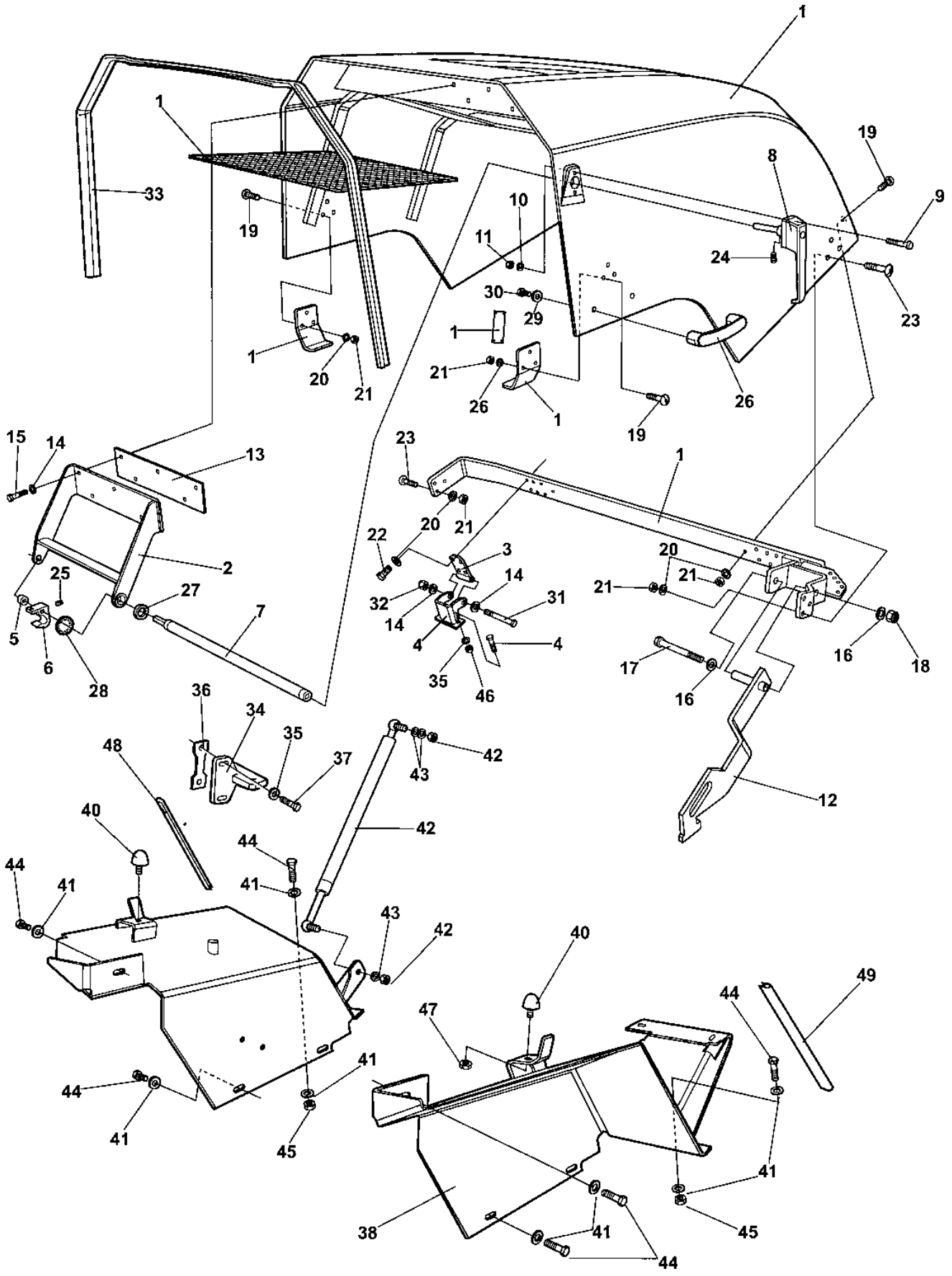

Structure

Item	Part No	Rem	Qty	Description	Code
1	4700390259		1	Hood, cpl	
		C	NA	.Hood	
2	4700390269		1	.Holder	
3	4700387148		2	.Hinge	
4	4700387151		2	.Hinge	
5	4700382335		1	.Spacer sleeve	
6	4700382130		1	.Hook	
7	4700390270		1	.Shaft	
8	4700382165		1	.Locking handle	
9	4700535011		2	.Screw	
10	4700904281		2	.Washer	
11	4700586001		2	.Lock nut	
12	4700390255		1	.Hood latch	
13	4700378433		1	.Holder plate	
14	4700904229		9	.Washer	8,4x16x1,5
15	4700500021		5	.Screw	M8-1,25x25 8.8
16	4700904231		2	.Washer	13x24x2 300 HV
17	4700500267		1	.Screw	M12x120 8,8 FZB
18	4700586019		1	.Lock nut	
19	4700903923		12	.Bolt, cup square neck	M6x25H 4,6 FZB
20	4700904228		26	.Washer	
21	4700570004		18	.Nut	M6X1,00 -8 A2K
22	4700500012		8	.Screw	M6x12
23	4700903856		6	.Bolt	M06x30
24	4700516002		1	.Set screw	
25	4700516049		1	.Set screw	
26	4700387948		1	.Handle	
27	4700904574		1	.Bushing	
28	4700792257		1	.Washer	25x41,4 FZB
29	4700904640		2	.Washer	8,4x22x3
30	4700500019		2	.Screw	M8x16H 8.8 A2K
31	4700500068		2	.Screw	M08x65
32	4700586003		2	.Lock nut	M8
33	4700792258	A	1XL	.Edge trim	
34	4700382131		1	Lock clamp	
35	4700904640		6	Washer	8,4x22x3
36	4700378959		1	Holder	
37	4700500047		2	Screw	
38	4700390298		1	Fender	Left
39	4700390299		1	Fender	Right
40	4700925629		2	Shock absorber	
41	4700904557		10	Washer	
42	4700390475	B	1	Gas spring	
43	4700904230		3	Washer	
44	4700500029		8	Screw	
45	4700570006		2	Nut	
46	4700570005		4	Nut	M8
47	4700573008		2	Nut	M8
48	4700902379	D	1XL	Edge trim	
49	4700902379	D	1XL	Edge trim	

A) L=2,150M
B) 200N
C) Not availabile as Spare part.
D) L=0,3M

Noise suppression

18655

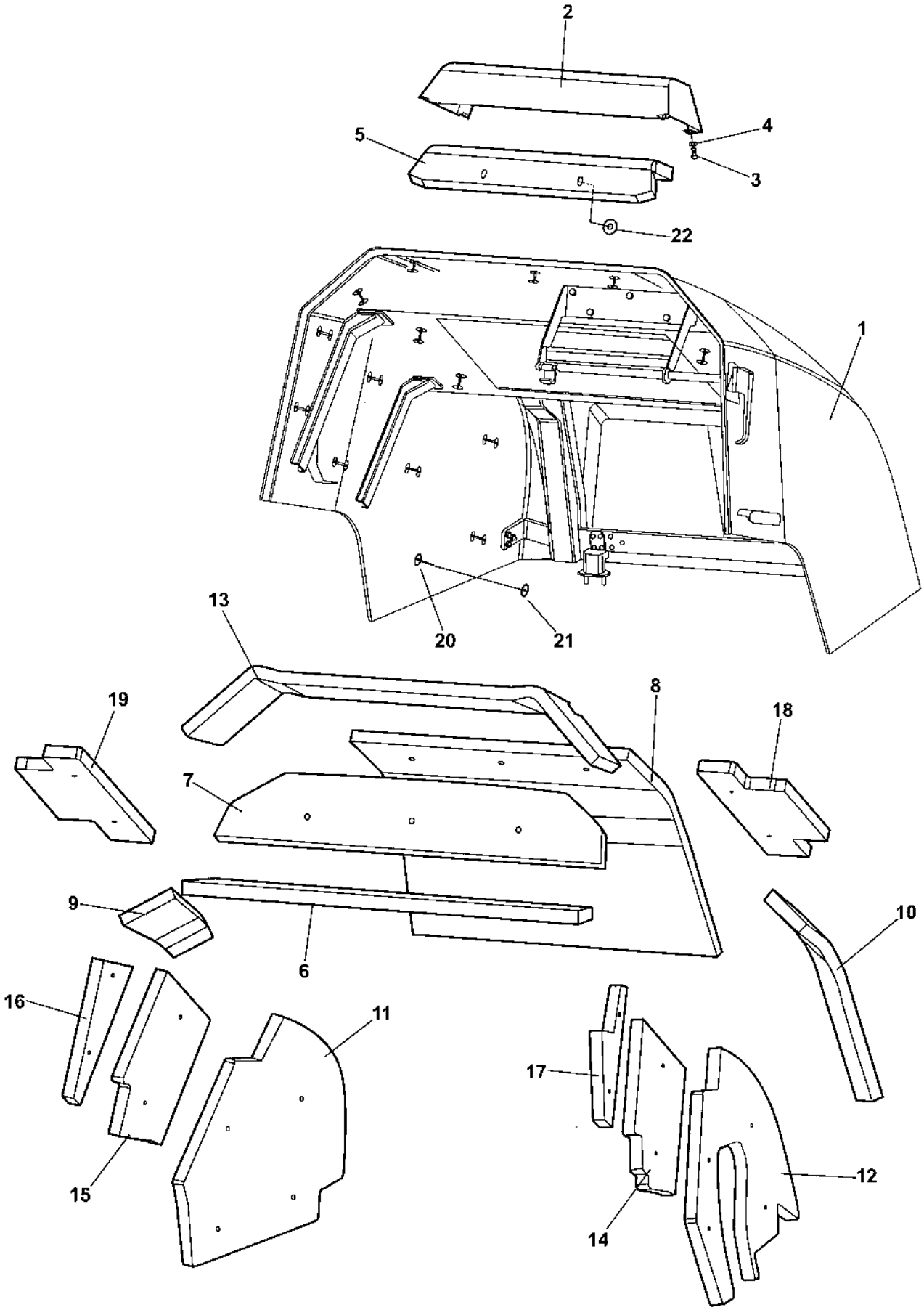

Noise suppression

Item	Part No	Rem	Qty	Description		Code
1	4700390259		1	Hood, cpl		
2	4700394176		1	Noise cover		
3	4700500040		4	Screw	M6-1x20 8,8	
4	4700928381		4	Washer	6,4x18x1,6	
5	4700394181		1	Noise absorbing material		
6	4700394199		1	Noise absorbing material		
7	4700394184		1	Noise absorbing material		
8	4700394185		1	Noise absorbing material		
9	4700394186		1	Noise absorbing material		
10	4700394187		1	Noise absorbing material		
11	4700394188		1	Noise absorbing material		
12	4700394189		1	Noise absorbing material		
13	4700394190		1	Noise absorbing material		
14	4700394191		1	Noise absorbing material		
15	4700394192		1	Noise absorbing material		
16	4700394195		1	Noise absorbing material		
17	4700394196		1	Noise absorbing material		
18	4700394197		1	Noise absorbing material		
19	4700394198		1	Noise absorbing material		
20	4700791233		1	Holder		
21	4700791234		1	Insulating washer		
22	4700373476		1	Insulating washer		

Drum

Item	Part No	Rem	Qty	Description	Code
10				Drum (Page 38)	

Drum

18334

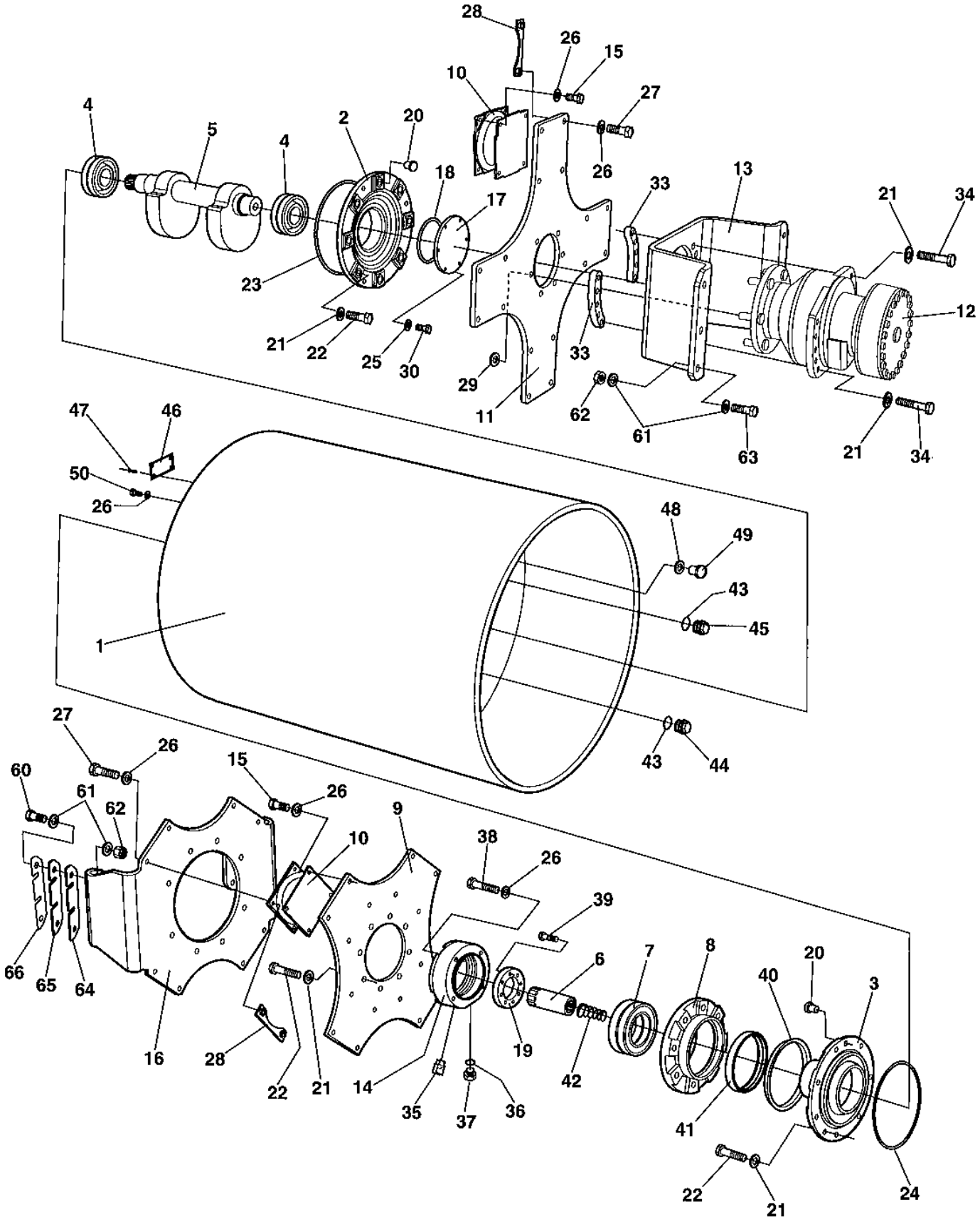
28
26
15
10
27
4
5
4
2
20
18
17
26
33
13
21
34
23
12
21
22
25
30
29
33
11
62
61
63
21
34
47
46
50
26
48
49
43
45
1
43
44
27
26
60
61
62
15
26
9
10
38
26
39
66
65
64
6
7
8
20
40
3
16
28
22
21
14
19
42
35
37
36
41
22
21
24

Drum

Item	Part No	Rem	Qty	Description		Code
1	4700390351		1	Drum		
2	4700374565		1	Bearing housing		
3	4700385133		1	Bearing housing		
4	4700114089		2	Spherical roller bearing		D
5	4700390357		1	Eccentric shaft		
6	4700381027		1	Splined sleeve		
7	4700116041		1	Taper roller bearing		D
8	4700343318		1	Bearing housing		D
9	4700390522		1	Holder plate		
10	4700336742		8	Shock absorber		B
11	4700390523		1	Drive disc		
12		A	1	Propulsion motor		
13	4700378003		1	Holder		
14	4700384397		1	Connector		
15	4700500051		32	Screw	M12x25H 8.8 A3K	
16	4700390521		1	Holder plate		
17	4700821460		1	Bearing cover		
18	4700160040		1	O-ring		D
19	4700381028		1	Bearing cover		
20	4700900775		6	Plug		
21	4700904232		34	Washer		
22	4700500070		24	Screw	M16x50	
23	4700160344		1	O-ring 70		D
24	4700160093		1	O-ring		D
25	4700904230		6	Washer		
26	4700904231		69	Washer	13x24x2 300 HV	
27	4700500037		32	Screw		
28	4700383436		16	Holder		
29	4700904793		6	Washer	19x34x3	
30	4700500028		6	Screw		
33	4700378488		2	Mounting plate		
34	4700500076		10	Screw	M16x55	
35	4700926736		1	Breather		B
36	4700162018		1	Sealing		D
37	4700370231		1	Plug		
38	4700500133		4	Screw		
39	4700791933		8	Screw	M8x40	
40	4700929447		1	V-ring		D
41	4700386272		1	Sealing		D
42	4700349715		1	Spring		
43	4700162017		2	Seal ring		D
44	4700232210		1	Plug		
45	4700343744		1	Magnetic plug		D
46	4700343801		1	Sign plate		
47	4700527002		4	Drive screw		
48	4700162027		1	Sealing		D
49	4700344196		1	Plug	M12	D
50	4700500163		1	Screw	M12x16	
52	4700500046		2	Screw		
60	4700500165		4	Screw	M16-2,0x75 8,8	
61	4700904232		20	Washer		
62	4700586021		10	Nut	M16	
63	4700500058		6	Screw	M16-2,0x65 8,8	
64	4700390549		N	Shim	T=5MM	
65	4700390550		N	Shim	T=3MM	
66	4700390551		N	Shim	T=1MM	

A) See section "Hydraulic propulsion".

Engine

Item	Part No	Rem	Qty	Description	Code
10				Engine John Deere 5030HF285 Tier3 (Page 42)	
20				Cooling system (Page 44)	
30				Combustion air system (Page 46)	
40				Fuel system (Page 48)	
50				Exhaust system (Page 50)	

Engine John Deere 5030HF285 Tier3

18669

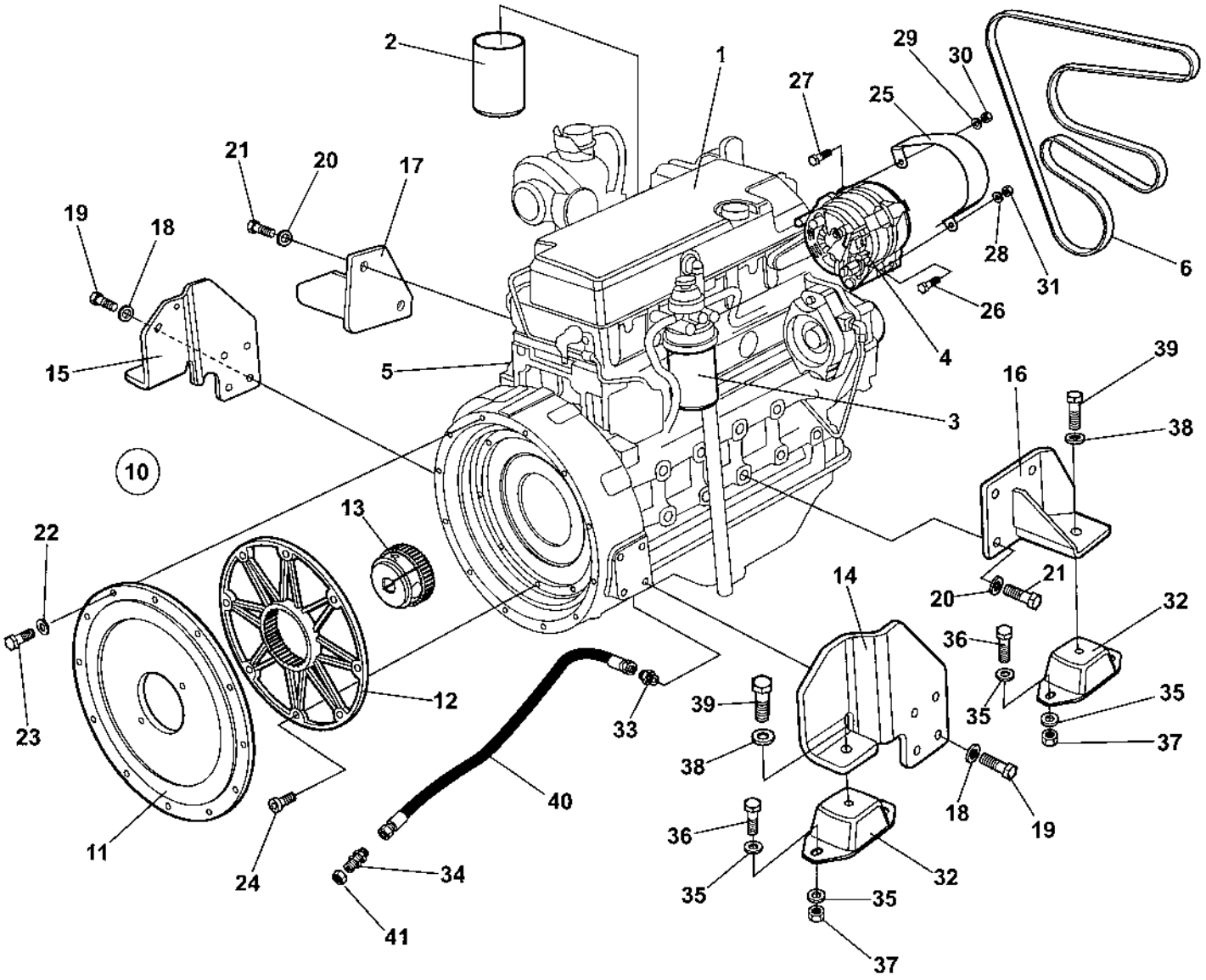

Engine John Deere 5030HF285 Tier3

Item	Part No	Rem	Qty	Description		Code
1	4700394478		1	Engine	John Deere 5030HF285 Tier 3	
2	4700940985		1	.Oil filter element		A
3	4700950306		1	.Fuel filter element		A
4	4700950305		1	.Alternator		C
5	4700940988		1	.Starter		C
6	4700940989		1	.V-belt		B
10	4700378409		1	Coupling cpl		
11	4700390592		1	.Engine plate		
12	4700390593		1	.Flange		
13	4700390594		1	.Hub		
14	4700378640		1	Engine bracket,	Front left	
15	4700378641		1	Engine bracket,	Front right	
16	4700378642		1	Engine bracket,	Rear left	
17	4700394479		1	Engine bracket.	Rear right	
18	4700904231		8	Washer	13x24x2 300 HV	
19	4700500037		8	Screw		
20	4700904232		5	Washer		
21	4700500070		5	Screw	M16x50	
22	4700904637		12	Washer		
23	4700500029		12	Screw		
24	4700509012		8	Screw		
25	4700378664		1	Protection cover		
26	4700500022		1	Screw	M8x30H 8.8 A2K	
27	4700500075		1	Screw	M6-1,0x25 8.8	
28	4700904229		1	Washer	8,4x16x1,5	
29	4700904228		1	Washer		
30	4700904563		1	Lock nut	M6	
31	4700791182		1	Lock nut	M8	
32	4700387129		4	Shock absorber		D
33	4700791634		1	Adapter		
34	4700791830		1	Bulkhead union		
35	4700904703		16	Washer		
36	4700500194		8	Screw		
37	4700586019		8	Lock nut		
38	4700904232		4	Washer		
39	4700500070		4	Screw	M16x50	
40	4700378622		1	Oil drain hose		
41	4700791820		1	Plug		

Cooling system

18668

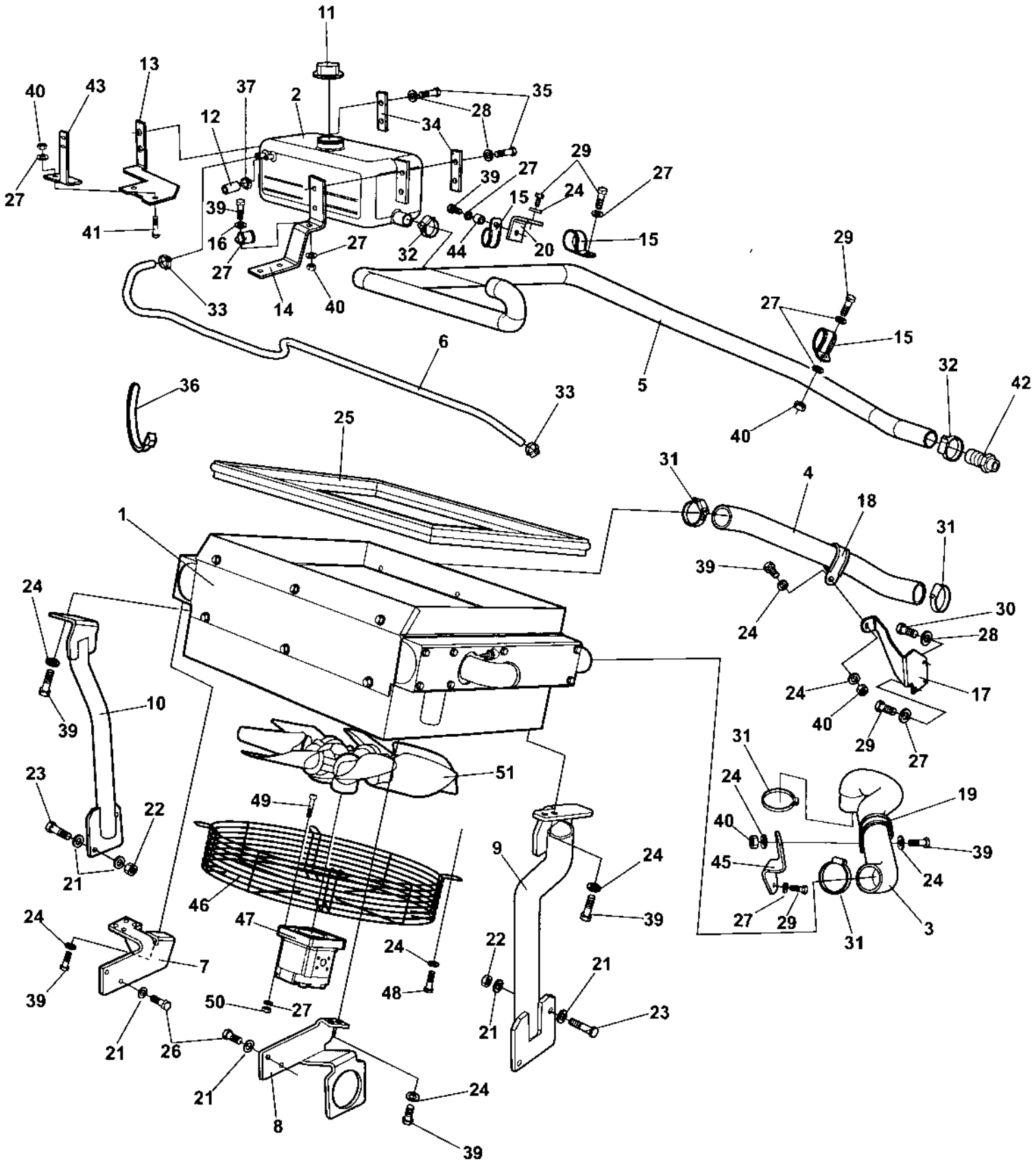

Cooling system

Item	Part No	Rem	Qty	Description		Code
1	4700394480		1	Radiator, cpl		
2	4700387130		1	Expansion tank		
3	4700394496		1	Coolant hose		D
4	4700390251		1	Coolant hose		D
5	4700394481		1	Coolant hose		D
6	4700393126		1	Rubber hose		
7	4700390390		1	Bracket,	Right	
8	4700390391		1	Bracket,	Left	
9	4700390392		1	Bracket,	Left	
10	4700390393		1	Bracket,	Right	
11	4700903714		1	Cap		
12	4700791423		1	Protecting cover		
13	4700390244		1	Bracket		
14	4700390245		1	Bracket		
15	4700921099		3	Clamp		
16	4700921072		3	Clamp		
17	4700390383		1	Bracket		
18	4700904352		1	Clamp		
19	4700903703		1	Clamp		
20	4700908136		1	Bracket		
21	4700904230		12	Washer		
22	4700570006		4	Nut		
23	4700500032		4	Screw	M10 x 55	
24	4700904640		17	Washer	8,4x22x3	
25	4700288129	A	1	Edge trim		
26	4700500028		4	Screw		
27	4700904229		17	Washer	8,4x16x1,5	
28	4700904228		5	Washer		
29	4700500019		6	Screw	M8x16H 8.8 A2K	
30	4700500013		1	Screw	M6-1x16 8,8	
31	4700313010		4	Hose clamp		
32	4700313006		2	Hose clamp		
33	4700313075		2	Hose clamp		
34	4700381413		2	Washer		
35	4700500040		4	Screw	M6-1x20 8,8	
36	4700925802		N	Cable ties	L=142 mm	
37	4700313108		1	Hose clamp		
39	4700500021		12	Screw	M8-1,25x25 8.8	
40	4700570005		8	Nut	M8	
41	4700500023		4	Screw	M8-1,25x40 8,8	
42	4700392013		1	Hose connection		
43	4700392119		1	Holder		
44	4700371728		1	Spacer sleeve		
45	4700394494		1	Bracket		
46	4700395690		1	Fan guard		
47	4700378154		1	Fan motor		
48	4700500022		4	Screw	M8x30H 8.8 A2K	
49	4700508027		4	Screw		
50	4700586003		4	Lock nut	M8	
51	4700395704		1	Fan		

A) L=2200MM

Combustion air system

18667

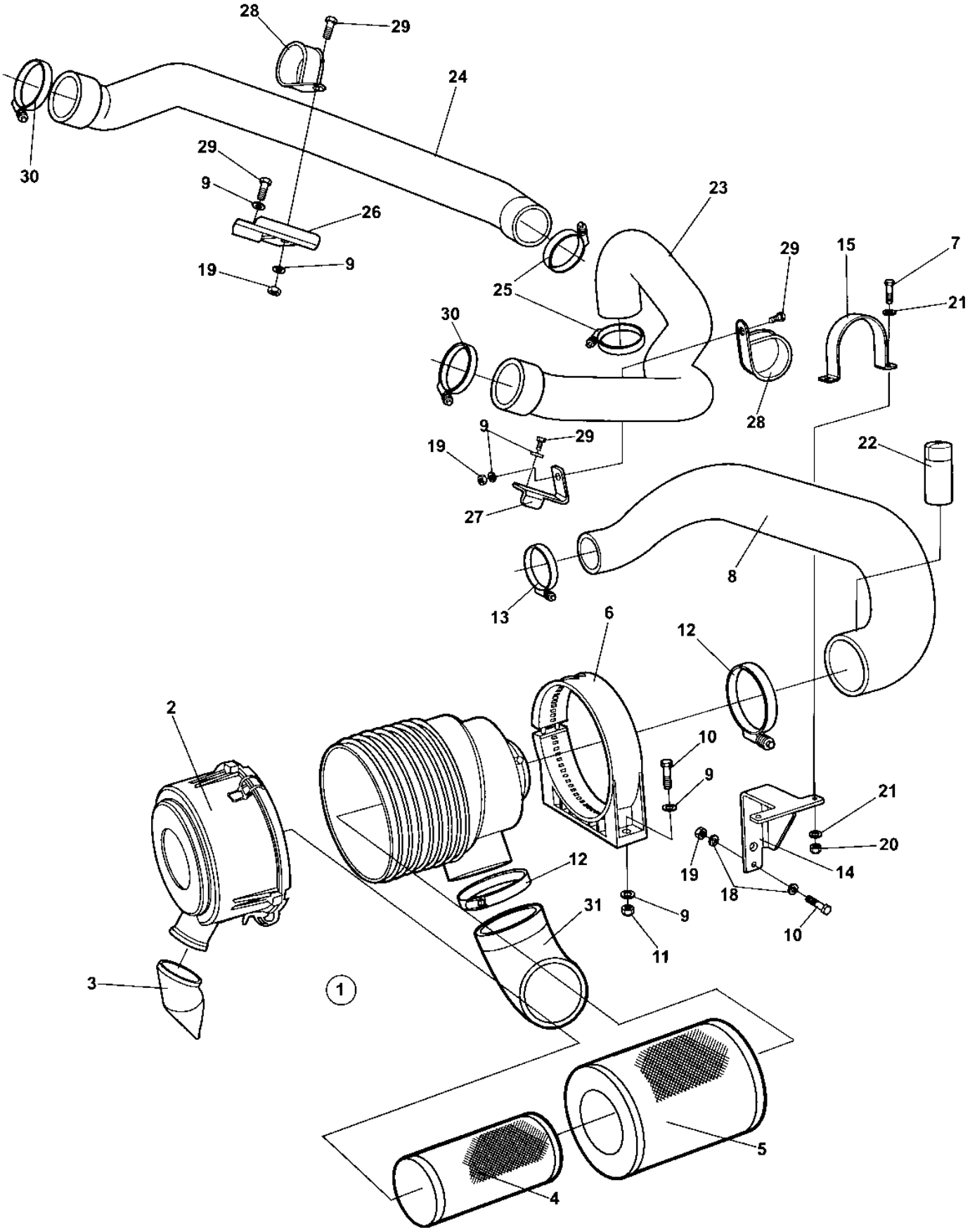

Combustion air system

Item	Part No	Rem	Qty	Description		Code
1	4700378657		1	Air cleaner, cpl		
2	4700378733		1	.Cover		
3	4700378734		1	.Valve		D
4	4700378735		1	.Air filter element	Safety	A
5	4700378736		1	.Air filter element	Main	A
6	4700378658		1	Pipe clamp		
7	4700500015		2	Screw	M6-1x30 8,8	
8	4700394484		1	Air intake hose		D
9	4700904640		8	Washer	8,4x22x3	
10	4700500047		4	Screw		
11	4700586003		2	Lock nut	M8	
12	4700378712		2	Clamp		
13	4700386966		1	Hose clamp	2.3/4"-3.5/8"	
14	4700394495		1	Bracket		
15	4700378926		1	Bracket		
18	4700904229		4	Washer	8,4x16x1,5	
19	4700570005		4	Nut	M8	
20	4700570004		2	Nut	M6X1,00 -8 A2K	
21	4700904639		4	Washer	6,7x14x1,5	
22	4700801981		1	Indicator		D
23	4700395863		1	Charge air hose		
24	4700395862		1	Charge air hose		
25	4700395323		2	Clamp		
26	4700394492		1	Bracket		
27	4700394493		1	Bracket		
28	4700904352		2	Clamp		
29	4700500053		4	Screw	M8x20H 8.8	
30	4700392161		2	Clamp		
31	4700396091		1	Hose		

Fuel system

18326-1

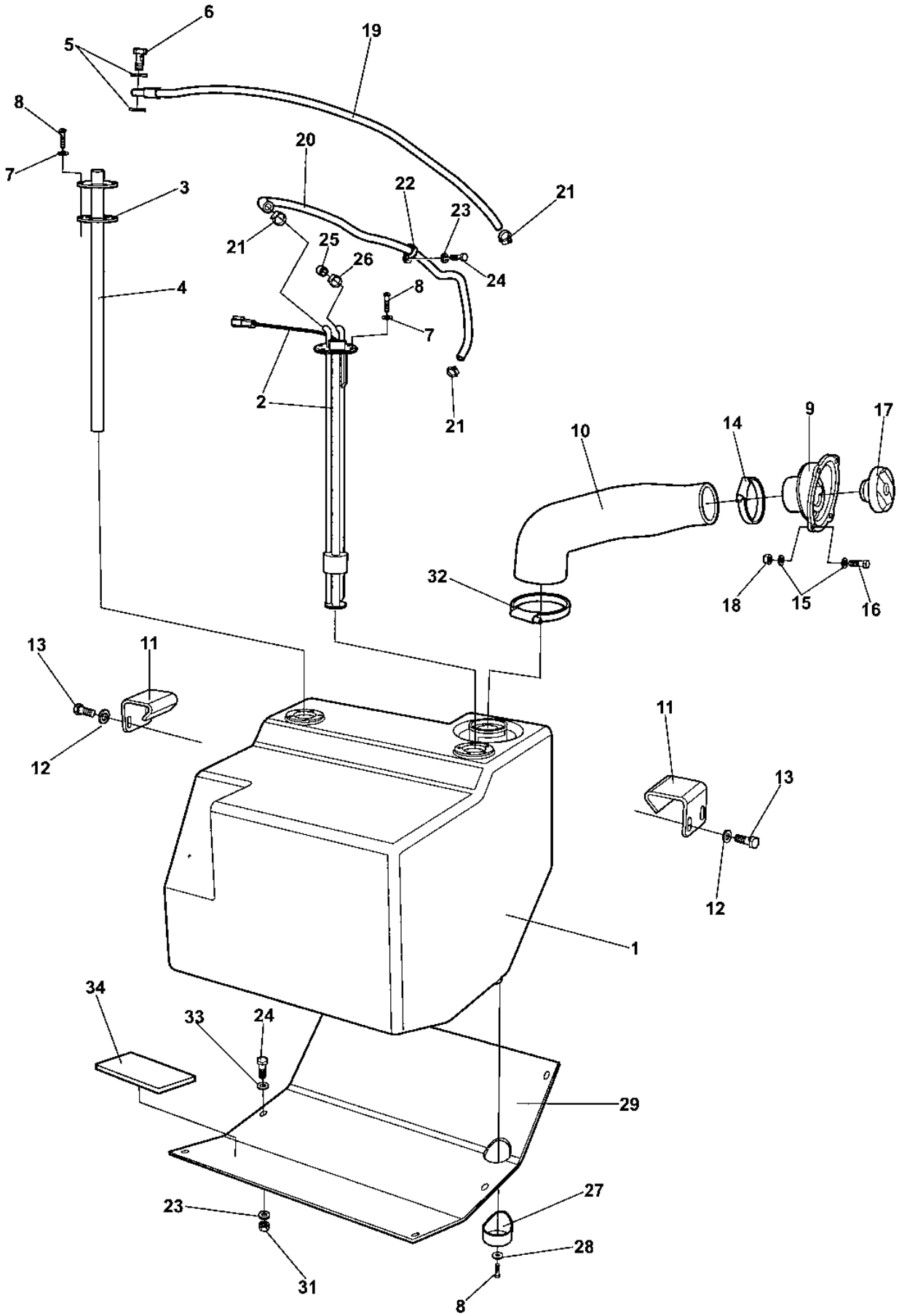

Fuel system

Item	Part No	Rem	Qty	Description		Code
1	4700378298		1	Fuel tank		
2	4700378574		1	Level sender		
3	4700378589		1	Gasket		
4	4700378588		1	Fuel pipe		
5	4700747282		2	Copper washer		
6	4700330171		1	Hollow screw		
7	4700904698		10	Washer		
8	4700903236		11	Screw, Thread rolling	K40x20	
9	4700387682		1	Filler neck		
10	4700390389		1	Filling hose		
11	4700378585		2	Clamp		
12	4700904557		4	Washer		
13	4700500029		4	Screw		
14	4700313023		1	Hose clamp		
15	4700904228		8	Washer		
16	4700500075		4	Screw	M6-1,0x25 8.8	
17	4700394253		1	Fuel cap		D
	4700945753		1	.Key	2pcs "921"	
18	4700586002		4	Lock nut		
19	4700389166		1	Fuel hose		
20	4700904984	A	1XL	Fuel hose		D
21	4700313001		3	Hose clamp		
22	4700904346		1	Clamp		
23	4700904229		7	Washer	8,4x16x1,5	
24	4700500021		7	Screw	M8-1,25x25 8.8	
25	4700904137		1	Protection cap		
26	4700313032		1	Clamp		
27	4700378957		1	Cover		
28	4700927974		1	Washer		
29	4700379464		1	Protection plate		
31	4700570005		6	Nut	M8	
32	4700313038		1	Hose clamp		
33	4700904556		6	Washer	8,4x16x3,0	
34	4700357459		4	Rubber cloth		
			1			

A) L=1300MM

Exhaust system

18328

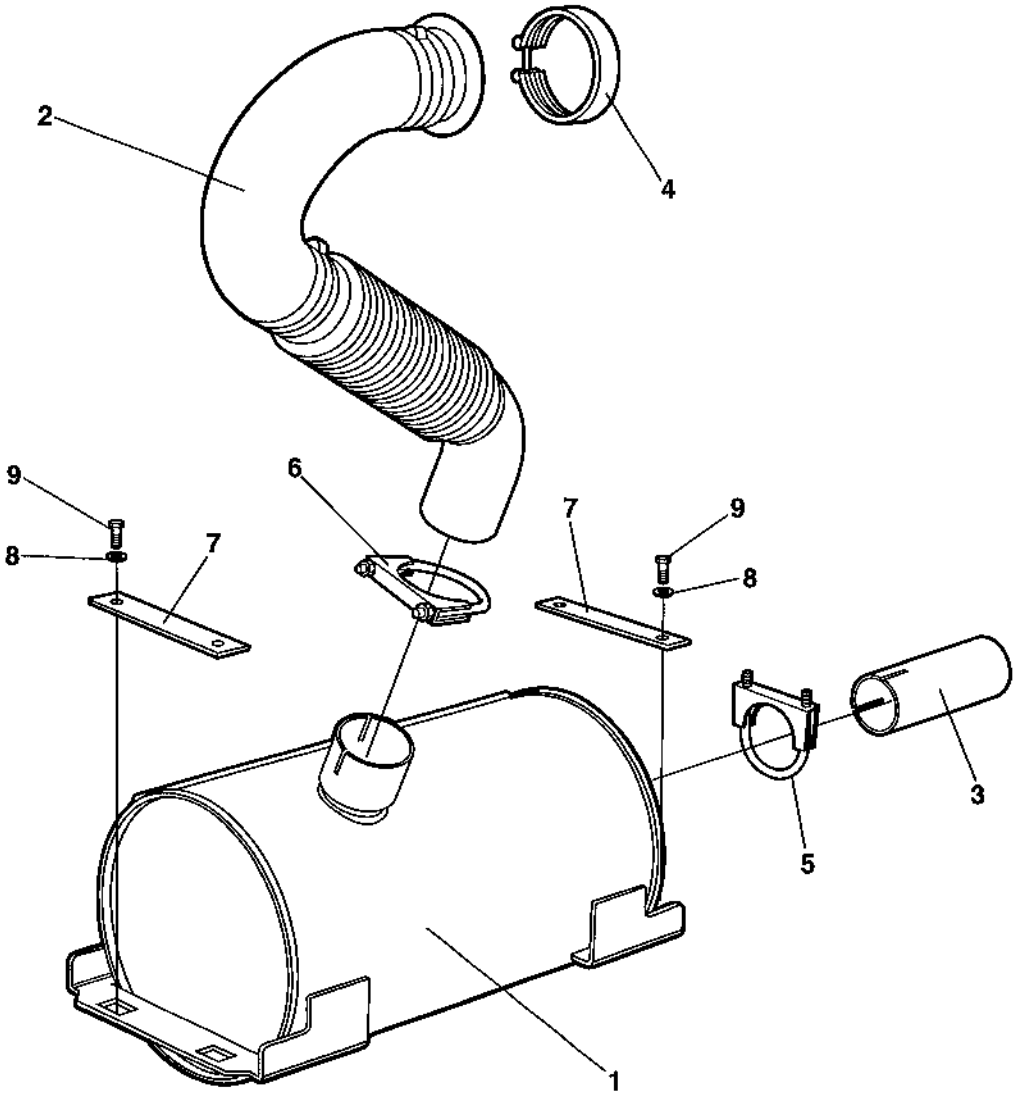

Exhaust system

Item	Part No	Rem	Qty	Description		Code
1	4700395939		1	Muffler		
2	4700390341		1	Exhaust pipe		
3	4700378294		1	Exhaust pipe		
4	4700378644		1	V-band clamp		
5	4700313036		1	Clamp		D
6	4700814261		1	Clamp		
7	4700379184		2	Washer		
8	4700904229		4	Washer	8,4x16x1,5	
9	4700500053		4	Screw	M8x20H 8.8	

Transmission

Item	Part No	Rem	Qty	Description	Code
10				Rear axle and wheels (Page 54)	

Rear axle and wheels

18335

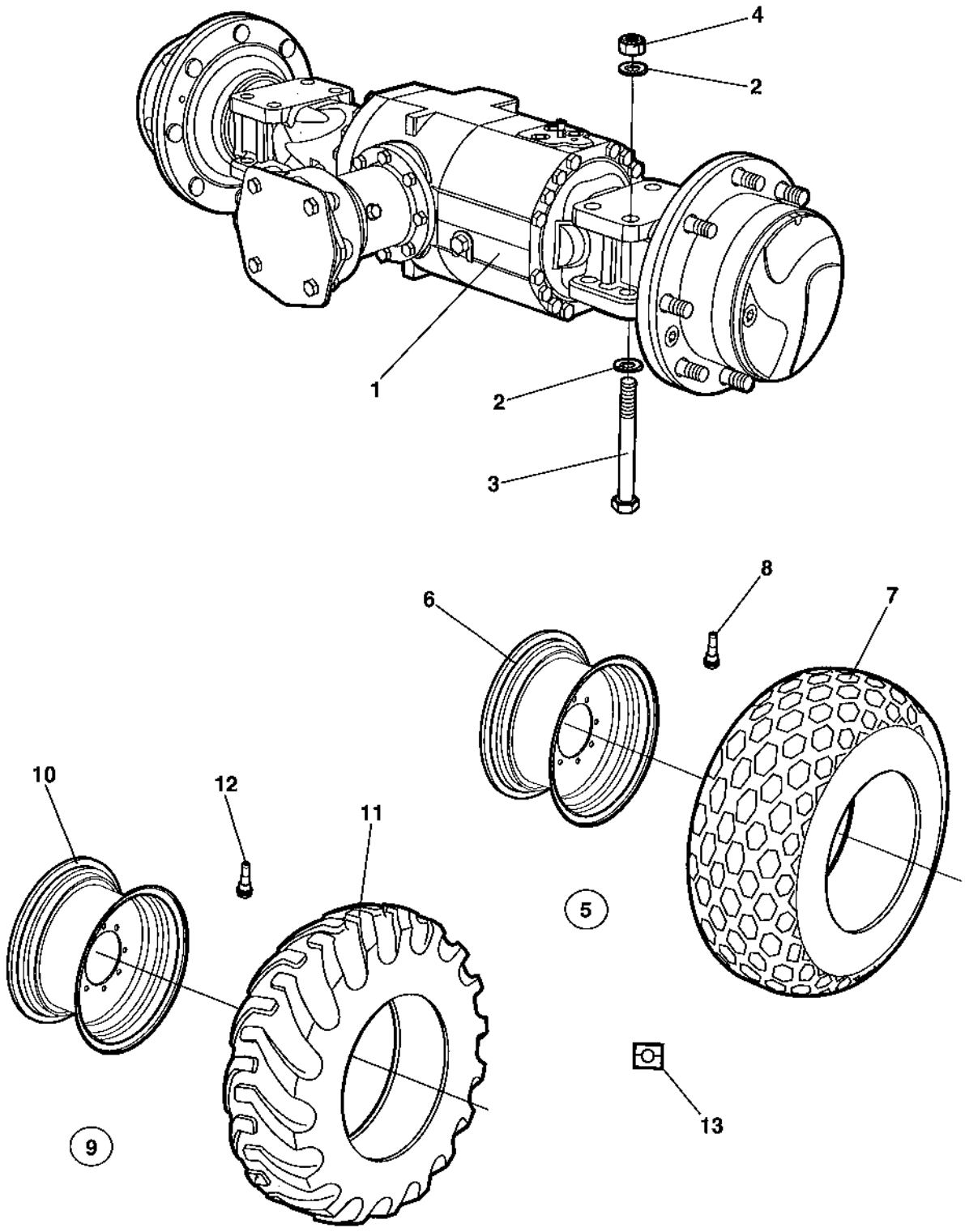

Rear axle and wheels

Item	Part No	Rem	Qty	Description		Code
1			1	Rear axle (Page 56)		
2	4700904233		16	Washer	21x36x3	
3	4700500226		8	Screw	M20-2.5x180 8,8	
4	4700901145		8	Lock nut	M20-10	
5	4700390662		1	All weather wheel Cpl.	Right	
	4700390663		1	All weather wheel Cpl.	Left	
	4700390666	A	1	All weather wheel Cpl.	Right	
	4700390667	A	1	All weather wheel Cpl.	Left	
6	4700390670		1	.Rim		
7	4700390671		1	.Tyre		
8	4700792261		1	.Air charging valve	Straight	B
9	4700390664		1	Tractor wheel, cpl	Right	
	4700390665		1	Tractor wheel, cpl	Left	
	4700390668	A	1	Tractor wheel, cpl	Right	
	4700390669	A	1	Tractor wheel, cpl	Left	
10	4700390670		1	.Rim		
11	4700390672		1	.Tyre		
12	4700792261		1	.Air charging valve	Straight	B
13	4700903985	B	1	Decal "SAFETY", "TYRE IN BALLAST"		

A) Liquid filled, Option.
B) Used with Liquid filled wheels.

Rear axle

18951

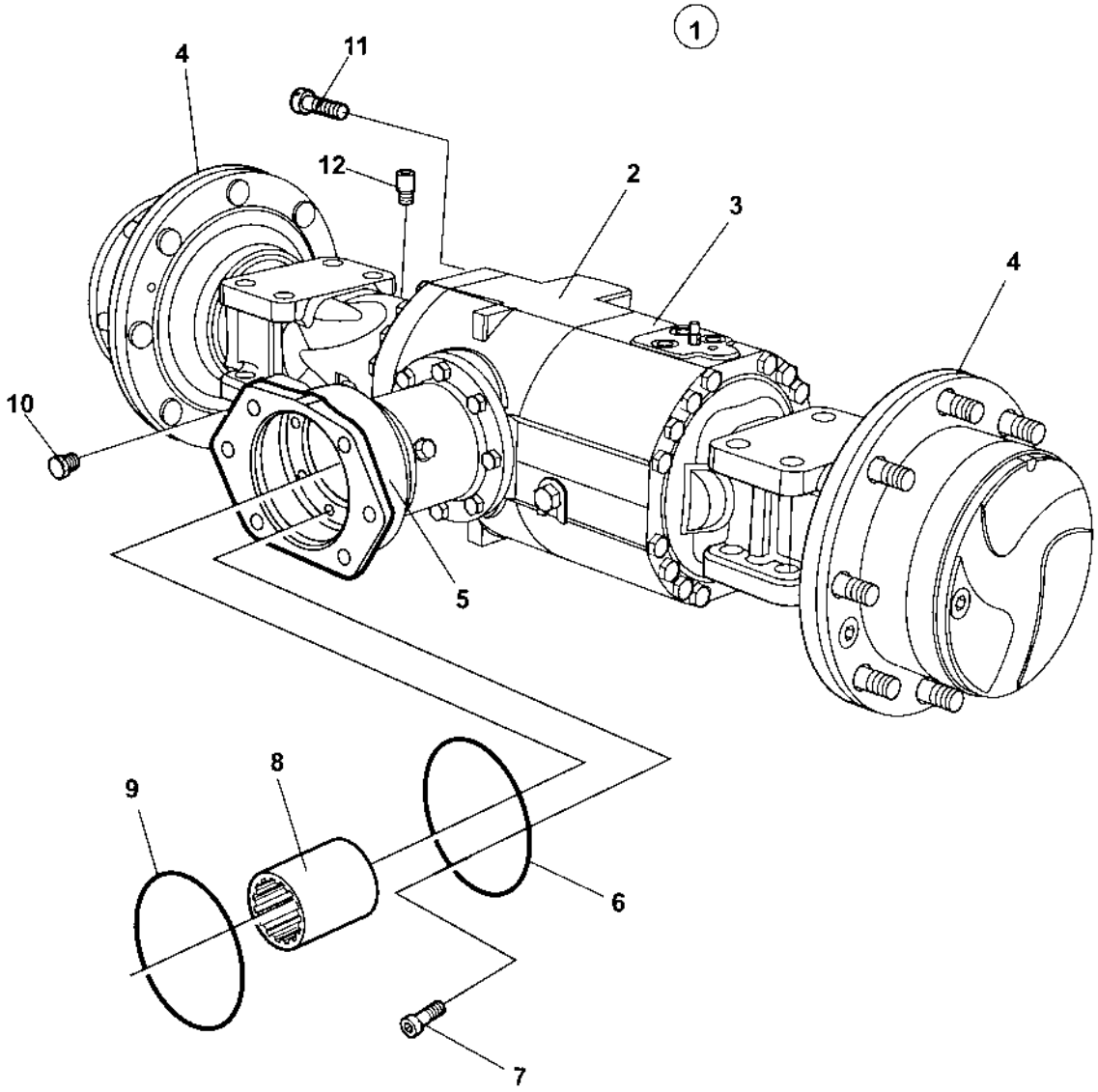

Rear axle

Item	Part No	Rem	Qty	Description	Code
1	4700378165		1	Rear axle	
2				.Differential with limited slip (Page 58)	
3				.Differential housing and brakes (Page 60)	
4				.Planet gear (Page 62)	
5	4700950556		1	.Flange	
6	4700929648		1	.O-ring	D
7	4700929712		8	.Screw	
8			1	.Splined sleeve	
9	4700909630		1	.O-ring	D
10			1	.Plug	D
11			16	.Screw	D
12	4700900926		1	.Breather	D

Differential with limited slip

18952

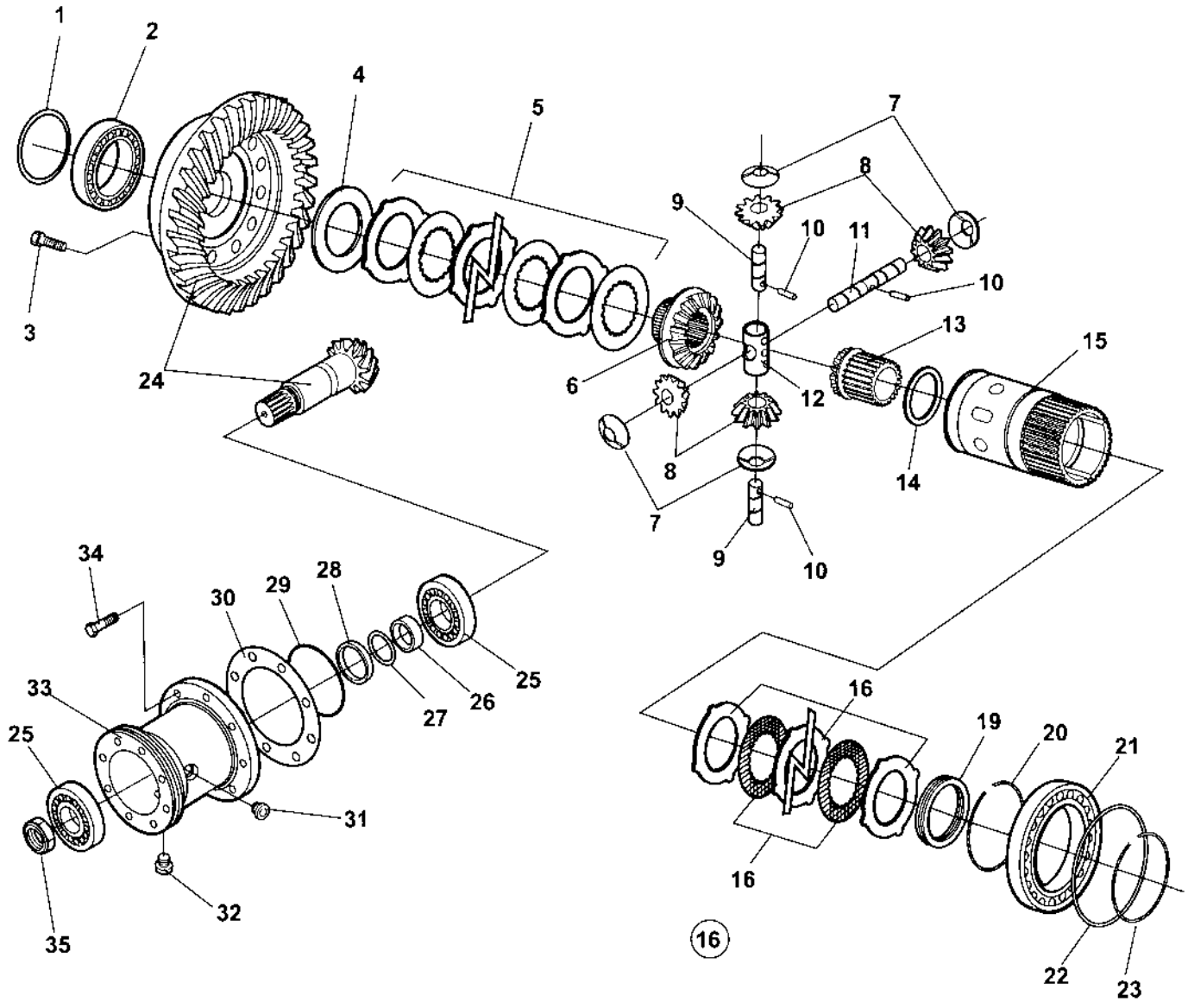

Differential with limited slip

Item	Part No	Rem	Qty	Description	Code
1			1	Shim	D
2			1	Bearing	D
3			12	Screw	D
4			1	Washer	D
5			1	Disc kit	D
6			1	Differential side gear	D
7			4	Washer	D
8			4	Pinion	D
9			2	Pin	D
10			3	Dowel	D
11			1	Pin	D
12			1	Shaft retainer	D
13			1	Differential side gear	D
14			1	Washer	D
15			1	Differential carrier	D
16			1	Disc kit	D
			8	.Disc	D
			7	.Disc	D
19			1	Bearing	D
20			1	Circlip	D
21	4700939009		1	Bearing	
22			1	Shim	
23			1	Circlip	
24			1	Bevel gear set	
25			2	Bearing	
26			1	Spacer	
27			1	Shim	
28	4700909586		2	Seal	D
29			1	O-ring	D
30			1	Shim	D
31	4700926732		1	Magnetic plug	
32	4700926810		1	Magnetic plug	
33			1	Cover	
34			8	Screw	
35			1	Nut	

Differential housing and brakes

18953

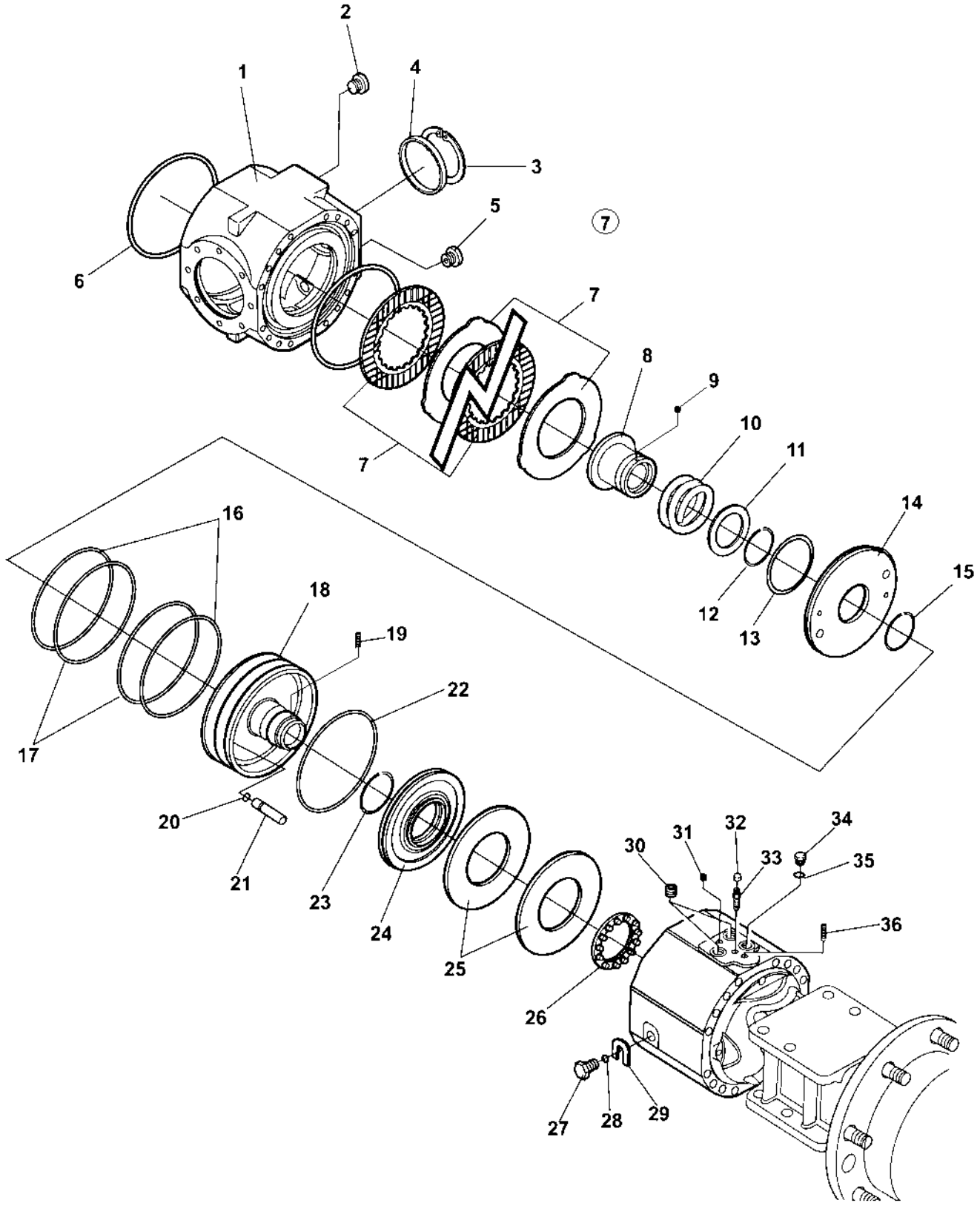

Differential housing and brakes

Item	Part No	Rem	Qty	Description	Code
1			1	Housing	
2			1	Plug	
3	4700938987		1	Circlip	
4	4700938986		1	Plug	
5	4812155463		1	Magnetic plug	
6	4700950515		2	O-ring	
7	4700950466		1	Brake disc kit	
			6	Brake disc	
			6	Brake disc	
8			1	Bushing	
9			1	Ball	
10			1	Spring	
11			1	Spacer	
12			2	Circlip	
13			2	Shim	
14			1	Disc	
15			2	Circlip	
16	4700950462		2	O-ring	
17	4700950465		2	Back-up ring	
18			1	Piston	
19			1	Dowel	
20	4700950514		3	O-ring	
21			3	Pin	
22	4700950463		1	O-ring	
23	4700950464		1	O-ring	
24			1	Piston	
25	4700936103		2	Spring	
26			1	Nut	
27			2	Screw	
28	349888003		2	O-ring	
29			2	Spacer	
30			2	Plug	
31			1	Plug	
32	4700936087		1	Plug	
33	4700926845		1	Ventilator screw	D
34	4700939282		1	Bolt	
35			1	Seal ring	
36			1	Screw	

Planet gear

18954

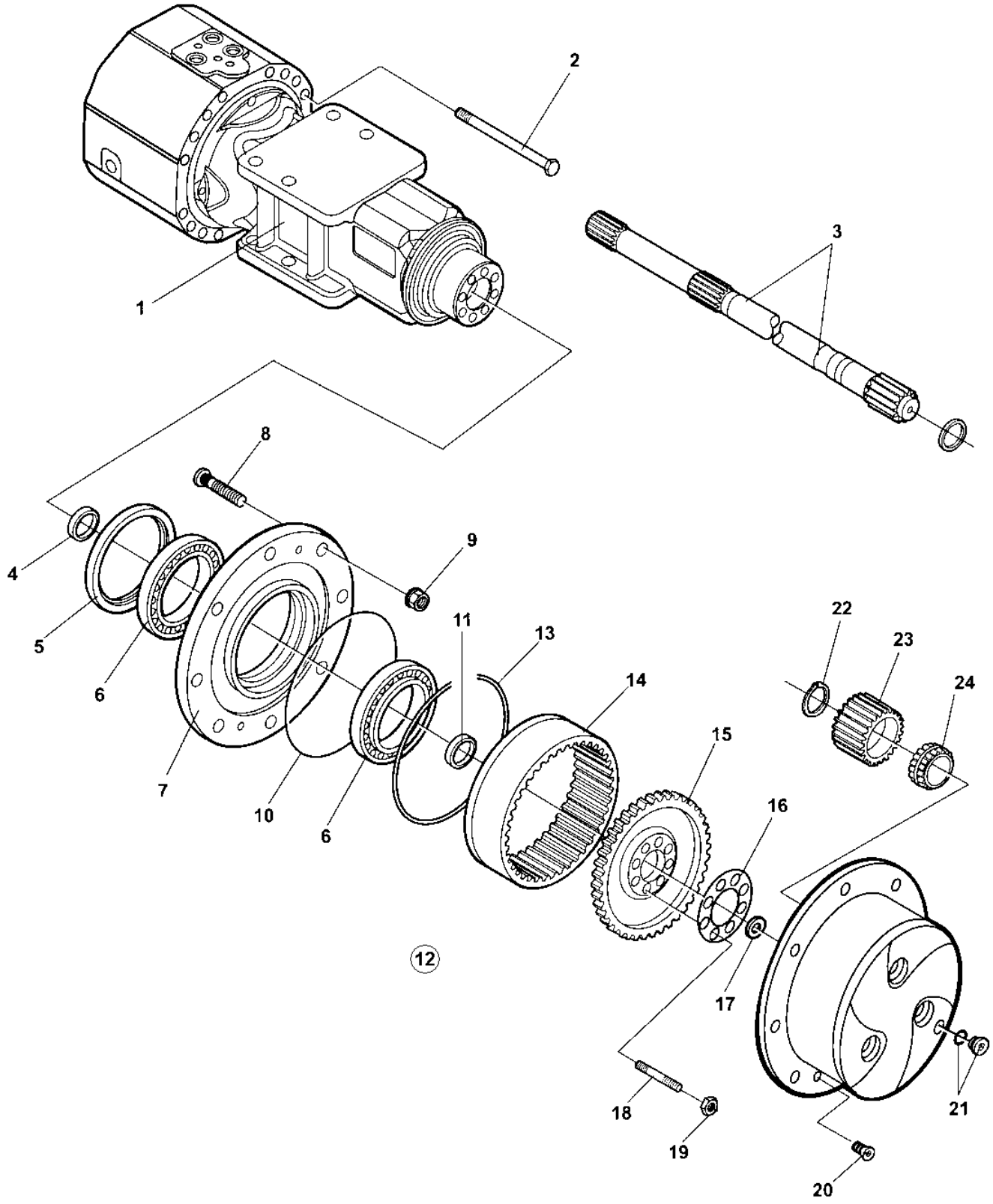

Planet gear

Item	Part No	Rem	Qty	Description	Code
1			1	Axle case	
2			16	Screw	
3			2	Half shaft	
4			2	Seal ring	
5			2	Seal	
6			4	Bearing	
7			2	Wheel hub	
8			16	Wheel stud	
9			16	Wheel nut	
10	4700936020		2	O-ring	D
11			2	Centering ring	D
12			2	Ring gear support	D
13	4700939384		2	Circlip	
14	4700939385		2	Ring gear	
15			2	Ring gear support	
16			2	Locking plate	
17	4700939270		2	Washer	
18			16	Stud	
19			16	Nut	
20	4700939015		4	Screw	
21	4700939350		2	Magnetic plug	
22	4700939011		6	Circlip	
23	4700939012		6	Planet gear	
24	4700939013		6	Bearing	

Hydraulic system

Item	Part No	Rem	Qty	Description	Code
10				Propulsion system (Page 66)	
20				Vibration system (Page 80)	
30				Steering system (Page 86)	
40				Brake system (Page 92)	
50				Flow divider (Page 94)	Option

Propulsion system

18381-1

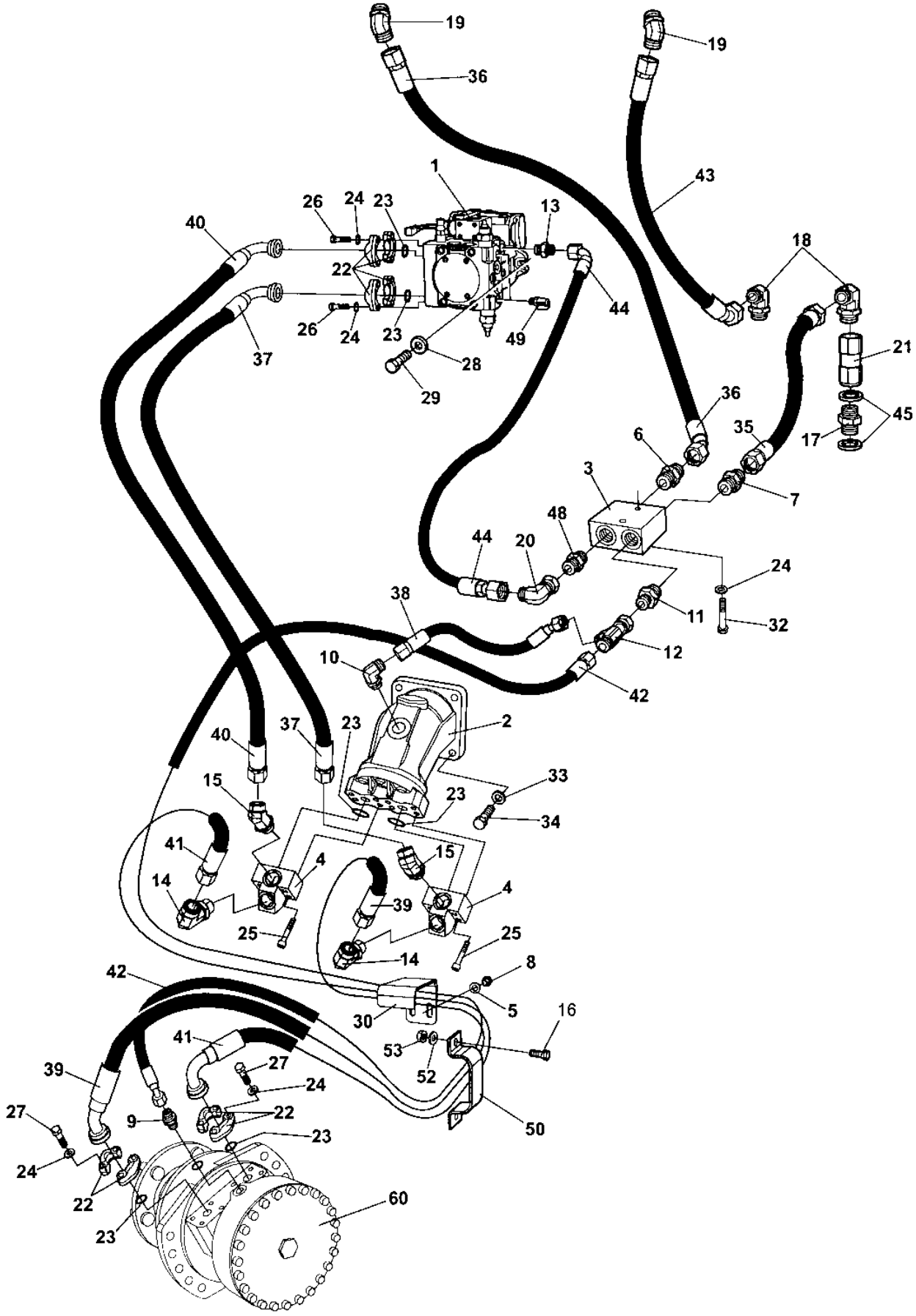

Propulsion system

Item	Part No	Rem	Qty	Description		Code
1	4700378164		1	Propulsion pump (Page 68)		C
2	4700378166	A	1	Hydraulic motor, propulsion (Page 76)		C
3	4700345243		1	Connection block		
4	4700392552		2	Hydraulic block		
5	4700904557		2	Washer		
6	4700791318		1	Straight connector		
7	4700791823		1	Straight connector orfs		
8	4700500048		2	Screw	M10-1,5x20 8,8	
9	4700791799		1	Straight connector orfs		
10	4700791841		1	Elbow 90 orfs		
11	4700791850		1	Straight connector		
12	4700791798		1	T-connector		
13	4700904641		1	Connector		
14	4700791549		2	Elbow adapter 90		
15	4700792157		2	Elbow adapter 45		
16	4700500020		2	Screw	M8-1,25x22 8,8	
17	4700792264		1	Straight connector		
18	4700791844		2	Elbow adapter 90		
19	4700791808		2	Elbow adapter 45		
20	4700904766		1	Elbow adapter 90		
21	4700374059		1	Check valve		
22	4700929226		8	Flange half		
23	4700904773		6	O-ring		
24	4700904637		18	Washer		
25	4700509035		8	Screw		
26	4700500031		8	Screw		
27	4700500030		8	Screw		
28	4700904703		2	Washer		
29	4700500037		2	Screw		
30	4700391440		1	Bracket		
32	4700500109		2	Screw	M10-1,5x65 8,8	
33	4700904214		4	Washer		
34	4700500116		4	Screw	M14x50	
35	4700483850		1	Hydraulic hose		
36	4700483826		1	Hydraulic hose		
37	4700483944		1	Hydraulic hose		
38	4700483983		1	Hydraulic hose		
39	4700483946		1	Hydraulic hose		
40	4700483944		1	Hydraulic hose		
41	4700484008		1	Hydraulic hose		
42	4700483915		1	Hydraulic hose		
43	4700483842		1	Hydraulic hose		
44	4700483871		1	Hydraulic hose		
45	4700162008		2	Seal washer		
48	4700904578		1	Connector		
49	4700901157		2	Measuring nipple		D
50	4700379057		1	Bracket		
52	4700904229		2	Washer	8,4x16x1,5	
53	4700570005		2	Nut	M8	
60	4700378143	B	1	Hydraulic motor (Page 78)	Propulsion	

A) Rear axle
B) Drum

4700378164 Propulsion pump

18888

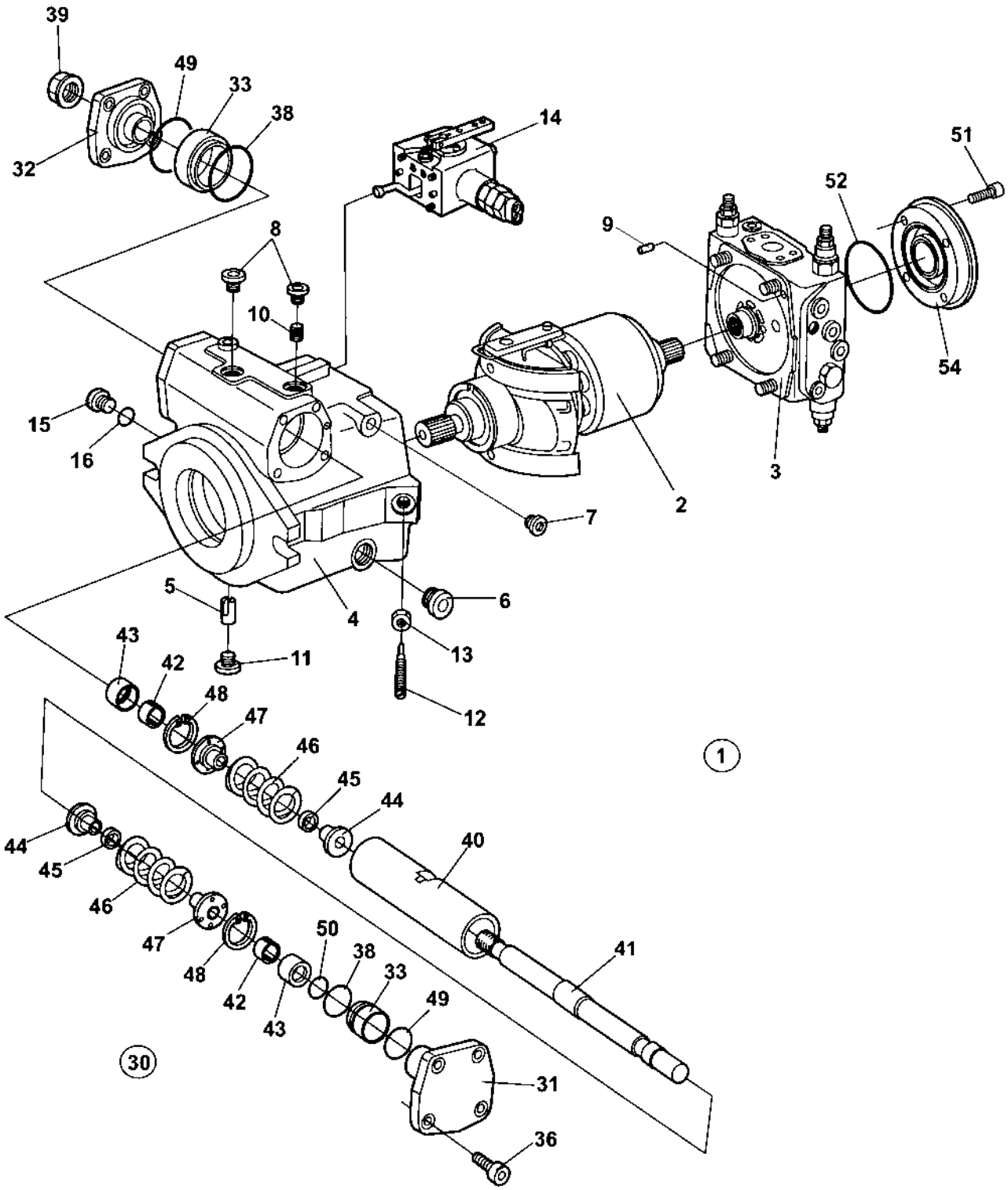

4700378164 Propulsion pump

Item	Part No	Rem	Qty	Description	Code
1			1	Vibration pump	
	4700950584		1	.Seal kit	
2	4700950578		1	.Rotary group, cpl (Page 70)	
3	4700950579		1	.Valve block, cpl (Page 72)	
4			1	.Housing	
5	4700935158		1	.Pin	
6	4700935219		1	.Plug	
7			1	.Plug	
8	4700936803		5	.Plug	
9	4700936300		1	.Dowel pin	
10	4700936308		2	.Orifice	
11	4700902624		1	.Screw	
12	4700902687		1	.Pin	
13	4700902695		1	.Nut	
14	4700950577		1	.Control unit, hydraulic pump (Page 74)	
15			1	.Plug	
16	4700927278		1	.O-ring	D
30			1	.Hydraulic control	D
31			1	..Cover	D
32			1	..Cover	D
33	4700938003		2	..Guide ring	
36	4700902856		8	..Screw	
38	4700938004		2	..O-ring	
39	4700902638		1	.Nut	
40	4700938005		1	..Piston	
41	4700937198		1	..Rod	
42			2	..Ring	
43	4700938014		2	..Sleeve	
44	4700937199		2	..Spring collar	
45			2	..Spacer ring	
46	4700937531		2	..Spring, outer	
	4700937200		2	..Spring, inner	
47	4700937201		2	..Spring collar	
48	4700939167		2	..Retaining ring	
49	4700938001		2	..O-ring	
50	4700909469		1	..O-ring	
51	4700939173		4	.Screw	
52	4700935192		1	.O-ring	
54			1	.Cover	

4700950578 Rotary group, cpl

16661

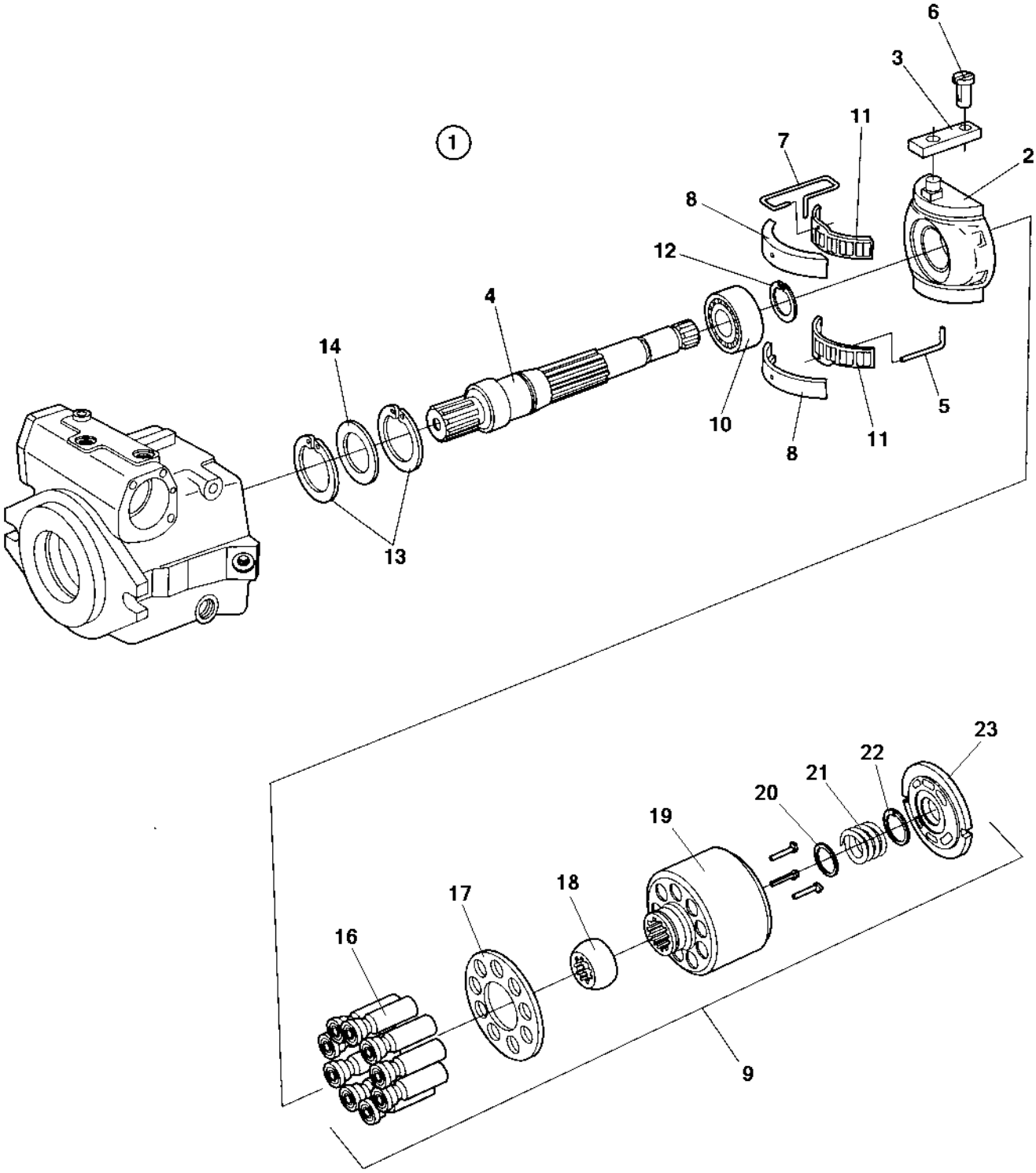

4700950578 Rotary group, cpl

Item	Part No	Rem	Qty	Description	Code
1			1	Rotating group, cpl	
2			1	.Cradle	
3	4700937174		1	.Slide ring	
4			1	.Shaft	
5	4700936621		1	.Wire	
6	4700935164		1	.Pin	
7	4700937175		1	.Wire	
8	4700937182		1	.Bearing liner, 1 pair	
10			1	.Roller bearing	
11	4700937186		1	.Cradle bearing assembly, 1 set	
12	4700901750		1	.Retaining ring	
13	4700935170		2	.Retaining ring	
14		1	1	.Seal ring	
15			1	.Cylinder with pistons, cpl	
16			9	..Piston	
17			1	..Retaining plate	
18			1	..Retaining ball	
19			1	..Cylinder with bush	
20			2	..Washer	
21			1	..Pressure spring	
22			1	..Retaining ring	
23			1	..Control plate	

1) Includes in seal kit

4700950579 Valve block, cpl

18889

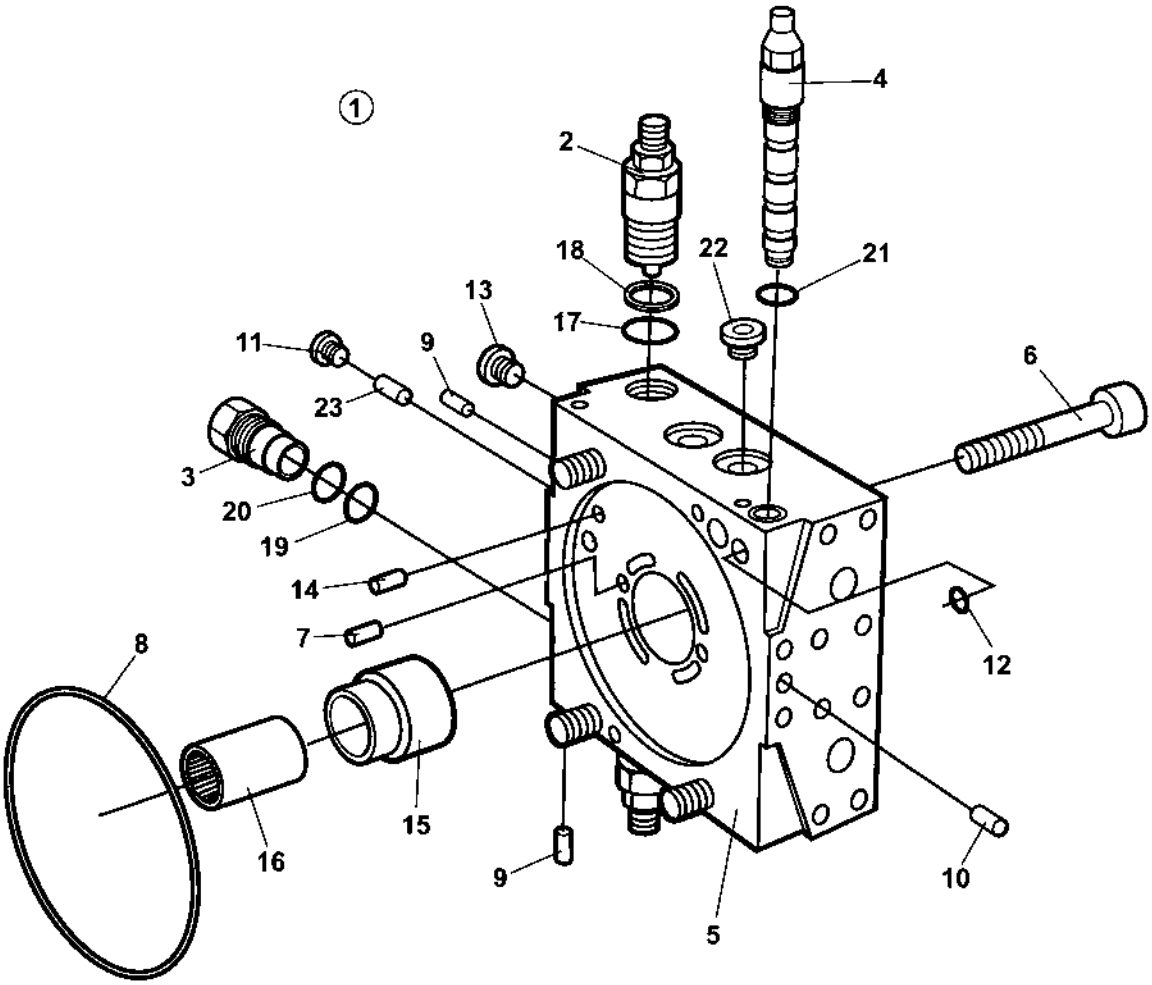

4700950579 Valve block, cpl

Item	Part No	Rem	Qty	Description	Code
1	4700950579		1	Valve block, cpl (Page 72)	
2			2	.Pressure relief valve	
3			1	.Pressure relief valve	
4	4700908375		1	.Valve	
5			1	.Port plate	
6	4700935177		4	.Screw	
7	4700937987		2	.Cylindric pin	
8	4700937206		1	.O-ring	
9	4700909514		3	.Pin	
10	4700935212		3	.Pin	
11	4700936855		1	.Locking screw	
12	4700909469		2	.O-ring	
13	4700902625		2	.Screw	
14	4700937990		1	.Pin	
15			1	.Bush	
16			1	.Bearing bush	
17	4700927278		2	.O-ring	D
18	4700936673		2	.Back-up ring	
19			1	.Sealing ring	
20			1	.O-ring	
21	4700936392		1	.O-ring	
22	4700902811		2	.Plug	
23	4700936313		1	.Orifice	

4700950577 Control unit, hydraulic pump

18886

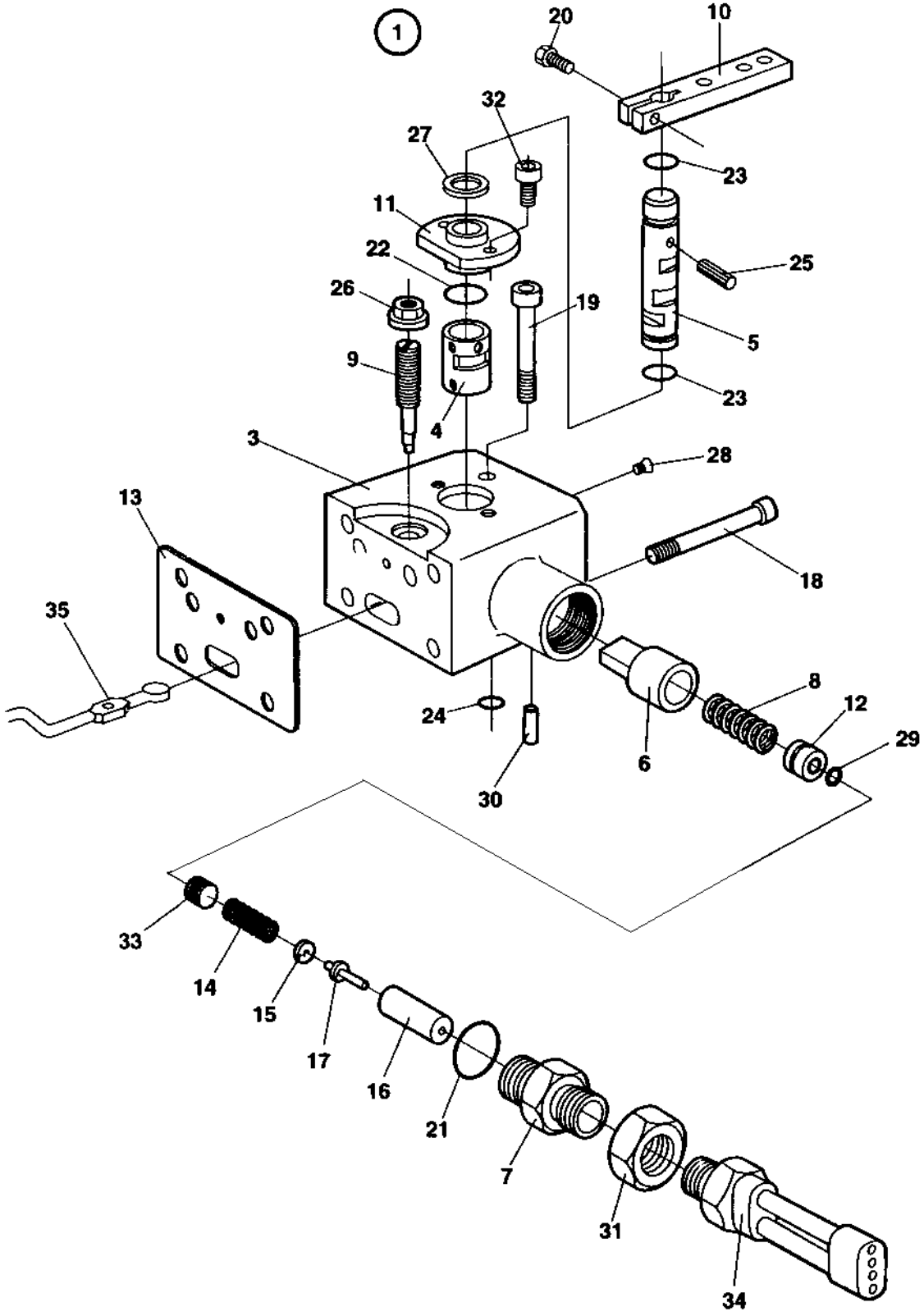

4700950577 Control unit, hydraulic pump

Item	Part No	Rem	Qty	Description	Code
1			1	Control unit, hydraulic pump	
3	4700935196		1	.Housing	
4	4700935197		1	.Bushing	
5			1	.Shaft	
6	4700936411		1	.Spring bush	
7			1	.Adapter	
8	4700935202		1	.Pressure spring	
9	4700935203		1	.Eccentric pin	
10	4700902763		1	.Lever	
11	4700935204		1	.Cover	
12	4700935205		1	.Bushing	
13	4700935218	A	1	.Gasket	
14	4700935206		1	.Spring	
15	4700935207		1	.Spring collar	
16	4700935208		1	.Spring cage	
17	4700935209		1	.Pin	
18	4700935210		4	.Screw	
19	4700935211		1	.Screw	
20	4700902770		1	.Screw	
21	4700936415	A	1	.O-ring	
22	4700938249	A	1	.O-ring	
23	4700902641	A	3	.O-ring	
24		A	1	.O-ring	
25	4700902767		1	.Needle roller	
26	4700936421	A	1	.Seal lock nut	
27	4700902773		1	.Shim	
28	4700935212		1	.Pin	
29	4700945311	A	1	.O-ring	
30	4700935190		1	.Cylindrical pin	
31	4700935214		1	.Nut	
32	4700902771		2	.Screw	
33			1	.Plug	
34	4700945836		1	.Neutral start switch Cpl.	D
35			1	.Lever	D

A) Incl. in item 2

4700378166 Hydraulic motor, propulsion

18898

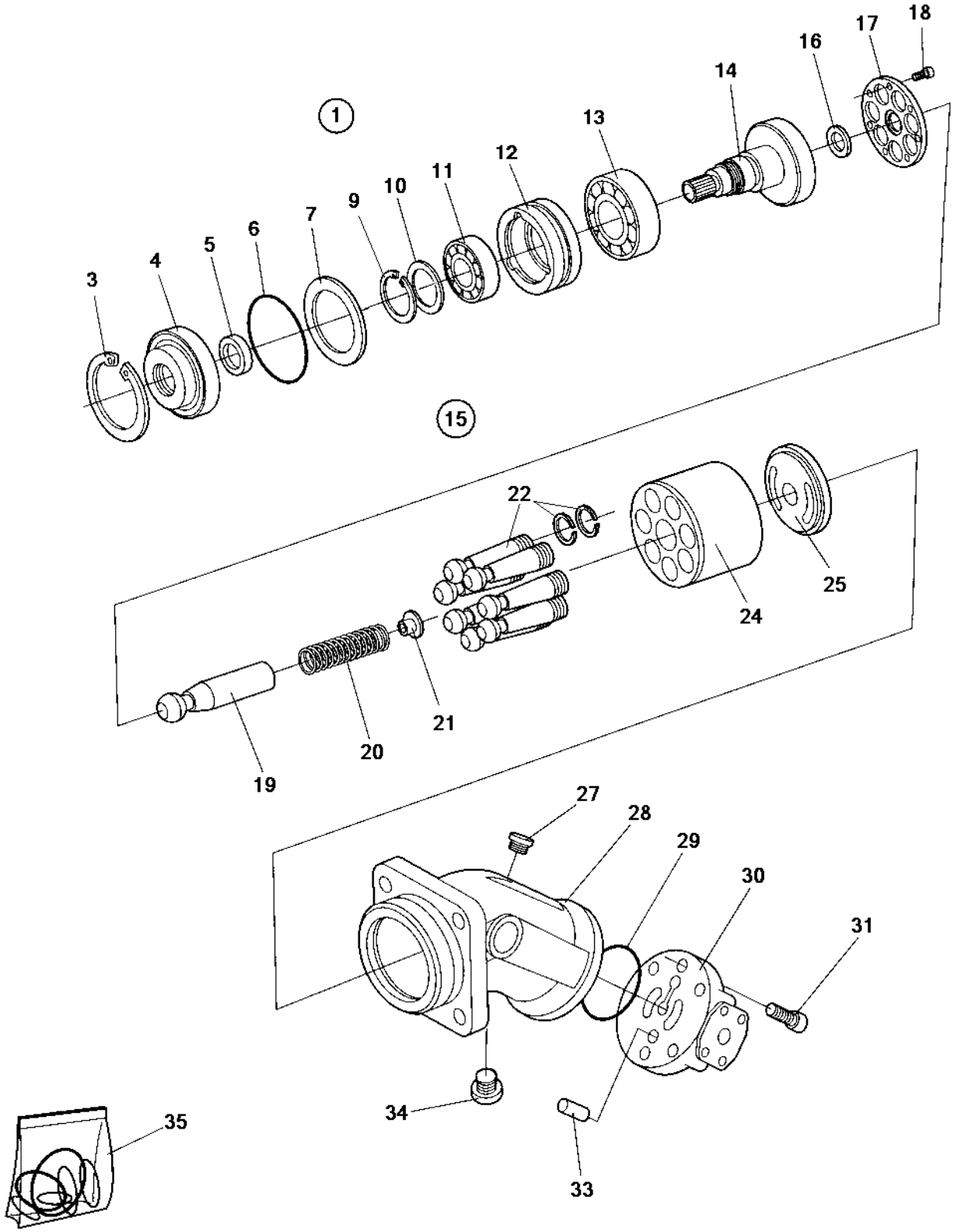

4700378166 Hydraulic motor, propulsion

Item	Part No	Rem	Qty	Description	Code
1	4700378166		1	Hydraulic motor, propulsion (Page 76)	C
3	4700950626		1	.Snap ring	
4			1	.Cover	
5		1	1	.Seal ring	
6	4700950627	1	1	.O-ring	
7			1	.Shim	
9	4700950628		1	.Retaining ring	
10	4700950629		1	.Back-up plate	
11	4700950630		1	.Bearing	
12	4700950631		1	.Bearing ring	
13	4700950632		1	.Bearing	
14			1	.Shaft	
15	4700950633		1	.Rotary group	
16			1	..Washer	
17	4700903489		1	..Securing plate	
18			7	..Screw	
19			1	..Pin	
20			1	..Spring	
21			1	..Adjustment shim	
22			7	..Piston	
24			1	..Cylinder	
25			1	..Control plate	
27			1	..Screw	
28			1	..Housing	
29	4700950634	1	1	..O-ring	
30			1	..Plate	
31			6	..Screw	
33			1	..Pin	
34	4700937259	1	1	..Screw	
35	4700212386		1	.Seal kit	

1) Included in seal kit, item 35

4700378143 Hydraulic motor Propulsion

18893

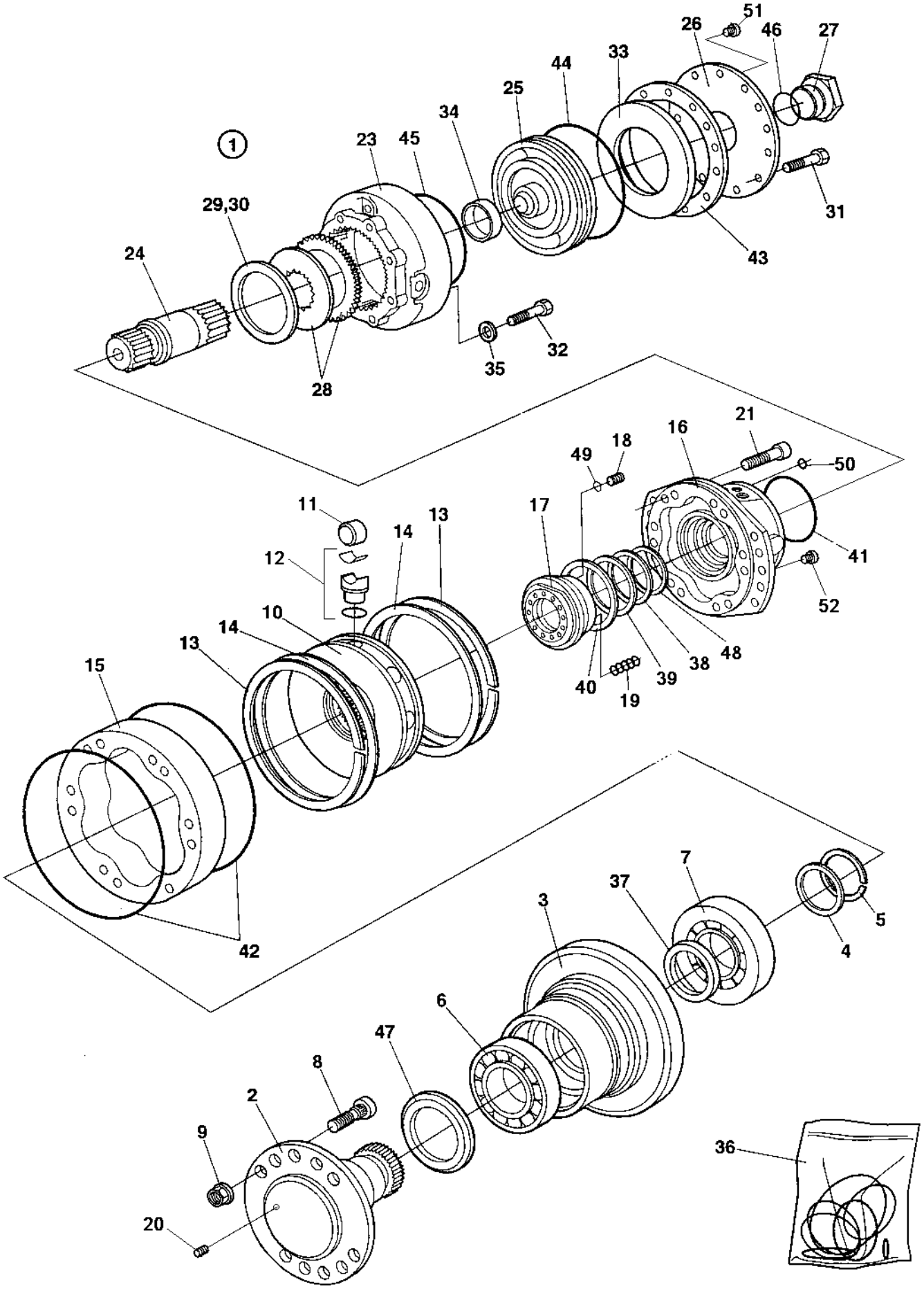

4700378143 Hydraulic motor Propulsion

Item	Part No	Rem	Qty	Description		Code
1	4700378143		1	Hydraulic motor (Page 78)	Propulsion	
2	4700936433		1	.Shaft		
3	4700936434		1	.Housing		
4	4700936435		1	.Washer		
5	4700936437		1	.Split ring		
6	4700936438		1	.Bearing front		D
7	4700936439		1	.Bearing		D
8	4700936442		6	.Wheel stud		D
9	4700936443		6	.Wheel nut		D
10			1	.Cylinder block		D
11	4700936445		10	.Roller		
12	4700940369		10	.Piston		
13	4700936447		2	.Circlip		
14			2	.Ring		
15			1	.Piston cam		
16			1	.Housing		
17	4700936451		1	.Distributor ring		
18	4700936452		1	.Stop pin		
19	4700936453		12	.Spring		
20	4700939219		1	.Plug		
21			8	.Screw		
23	4700936472		1	.Brake housing		
24	4700936473		1	.Shaft		
25	4700936474		1	.Brake piston		D
26	4700938499		1	.End cover		
27	4700902407		1	.Plug		
28	4700936477		19	.Brake disc, outer		D
	4700936478		17	.Brake disc, inner		D
29	4700936479		1	.Shim		D
30	4700936480		1	.Shim		D
31			24	.Screw		D
32	4700902799		8	.Screw		
33	4700936484		1	.Disc spring		
34	4700936485		1	.Brass bushing		D
35	4700936482		8	.Washer		
36	4700936260		1	.Seal kit		D
37	4700936441		1	..Shaft kit		
38	4700936456		1	..Sealing		
39	4700936455		1	..Sealing		
40	4700936454		1	..Sealing		
41			1	..Sealing		
42	4700194045		2	..O-ring		
43			1	..Gasket		
44	4700194064		1	..Ring		
45	4700936475		1	..Quad ring		
46	4700904066		1	..O-ring		
47	4700936440		1	..Face seal		
48			1	..Sealing		
49			1	..O-ring		
50			1	..O-ring		
51			1	.Plug		
52			1	.Plug		

Vibration system

18330-1

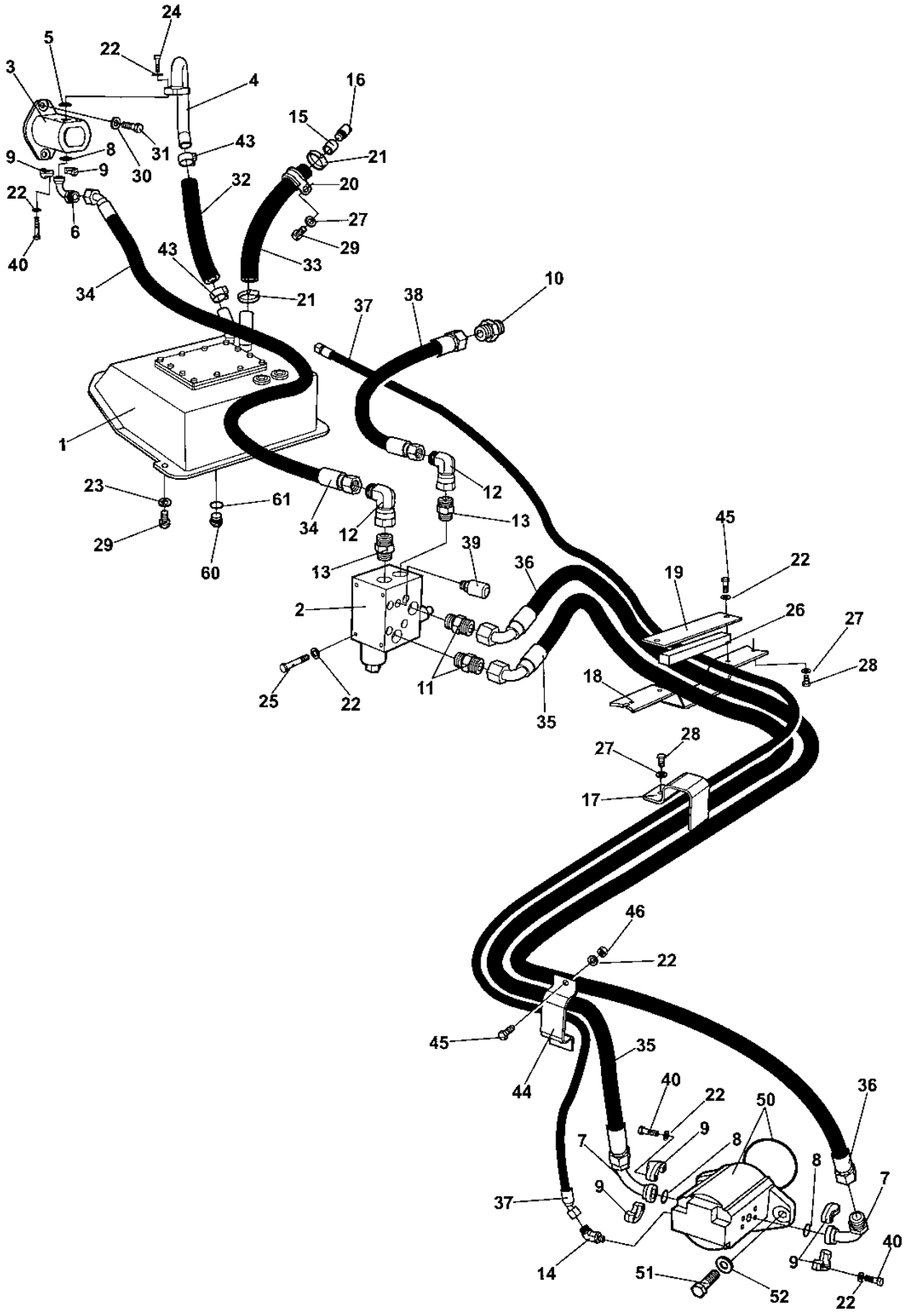

Vibration system

Item	Part No	Rem	Qty	Description		Code
1	4700378617		1	Hydraulic oil tank		
	4700922552		1	.Oil level glass		
2	4700378149		1	Vibration valve (Page 82)		
3	4700378155		1	Steering pump		
4	4700378445		1	Flange fitting		
5	4700813429		1	O-ring		
6	4700792199		1	Flange fitting		
7	4700792198		2	Flange fitting		
8	4700904774		3	O-ring		
9	4700232145		6	Split flange		
10	4700791823		1	Straight connector orfs		
11	4700791632		2	Straight connector orfs		
12	4700904584		2	Elbow connector 90		
13	4700791853		2	Straight connector orfs		
14	4700791836		1	Elbow adapter 45		
15	4700357139		1	Connector		
16	4700357138		1	Ventilating filter		A
17	4700391440		1	Bracket		
18	4700378668		1	Hose clamp		
19	4700378669		1	Hose clamp		
20	4700921022		1	Hose clamp		
21	4700313008		2	Hose clamp		D
22	4700904229		22	Washer	8,4x16x1,5	
23	4700904557		2	Washer		
24	4700508048		4	Screw		
25	4700500024		2	Screw	M8x45	
26	4700202043	A	1XL	Rubber strip		
27	4700904230		5	Washer		
28	4700500043		4	Screw	M10x16H 8,8	
29	4700500028		3	Screw		
30	4700904703		2	Washer		
31	4700500197		2	Screw	12x90	
32	4700792167		1	Hydraulic hose		
33	4700792168		1	Hydraulic hose		
34	4700483928		1	Hydraulic hose		
35	4700483839		1	Hydraulic hose		
36	4700483917		1	Hydraulic hose		
37	4700483918		1	Hydraulic hose		
38	4700483850		1	Hydraulic hose		
39	4700901157		1	Measuring nipple		D
40	4700500022		12	Screw	M8x30H 8.8 A2K	
43	4700902295		2	Clamp		
44	4700379057		1	Bracket		
45	4700500053		4	Screw	M8x20H 8.8	
46	4700570005		2	Nut	M8	
50	4700378621		1	Hydraulic motor, vibration (Page 84)		
	4700160279		1	O-ring		D
51	4700500046		2	Screw		
52	4700904231		2	Washer	13x24x2 300 HV	
60	4700232039		1	Plug	G3/4	
61	4700791120		1	Sealing washer		

A) L=0,220M

4700378149 Vibration valve

18924

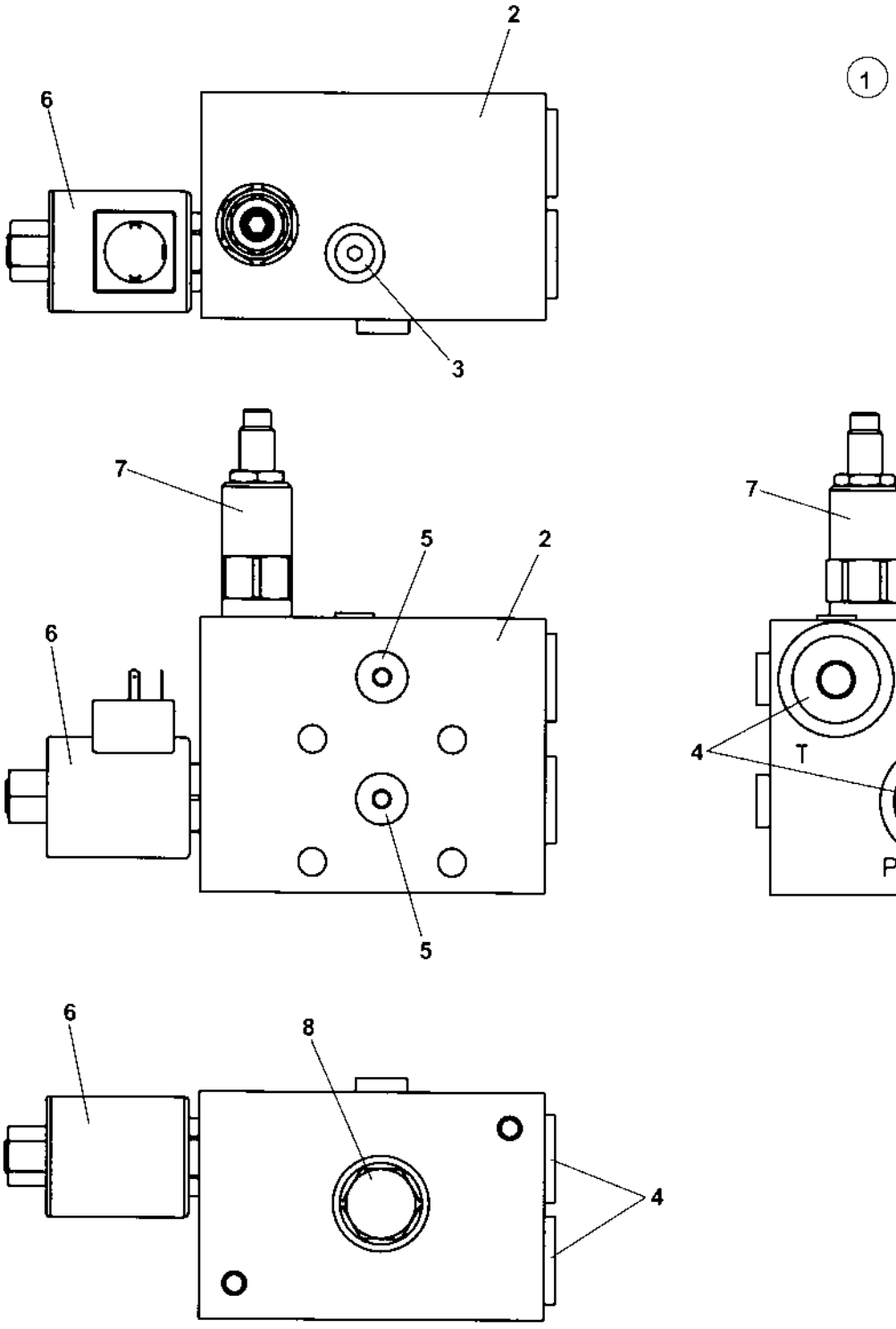

4700378149 Vibration valve

Item	Part No	Rem	Qty	Description	Code
1	4700378149		1	Vibration valve (Page 82)	
2			1	.Valve block	
3			1	.Plug	
4			2	.Plug	
5			2	.Plug	
6			1	.Solenoid valve, cpl	
	4700945291		1	..Coil	
7			1	.Pressure relief valve	
8			1	.Check valve	

4700378621 Hydraulic motor, vibration

18946

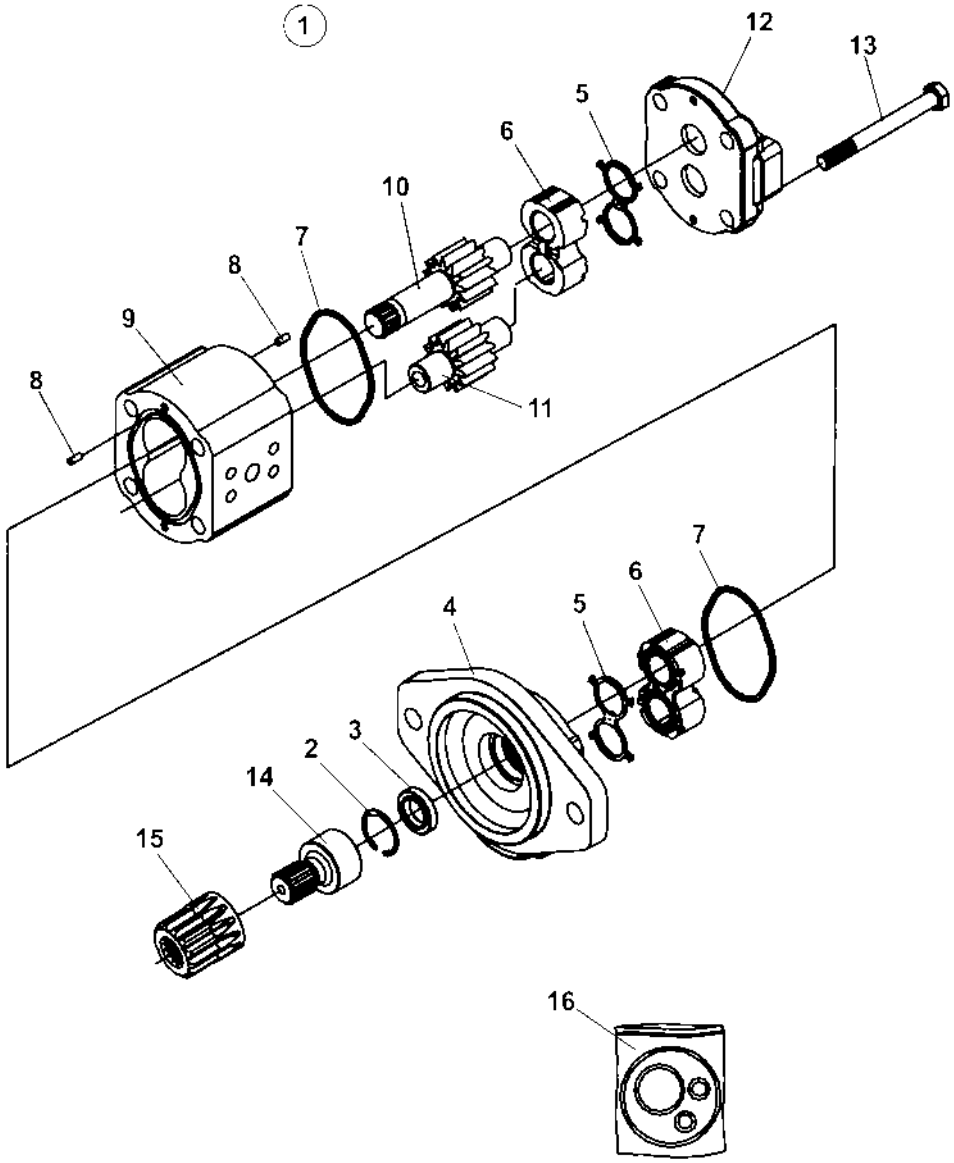

4700378621 Hydraulic motor, vibration

Item	Part No	Rem	Qty	Description	Code
1	4700378621		1	Hydraulic motor, vibration (Page 84)	
2			1	.Retaining ring	
3		A	1	.Shaft seal	
4			1	.Flange	
5		A	2	.Seal	
6			2	.Bearing block	
7	4700937900	A	2	.O-ring	
8			4	.Dowel pin	
9			1	.Housing	
10			1	.Drive gear	
11			1	.Idler gear	
12			1	.Cover	
13			4	.Screw	
14			1	.Coupling	
15	4700340862		1	Splined sleeve	
16	4700903431		1	Seal kit	D

A) Included in item 16, seal kit

Steering system

18331-1

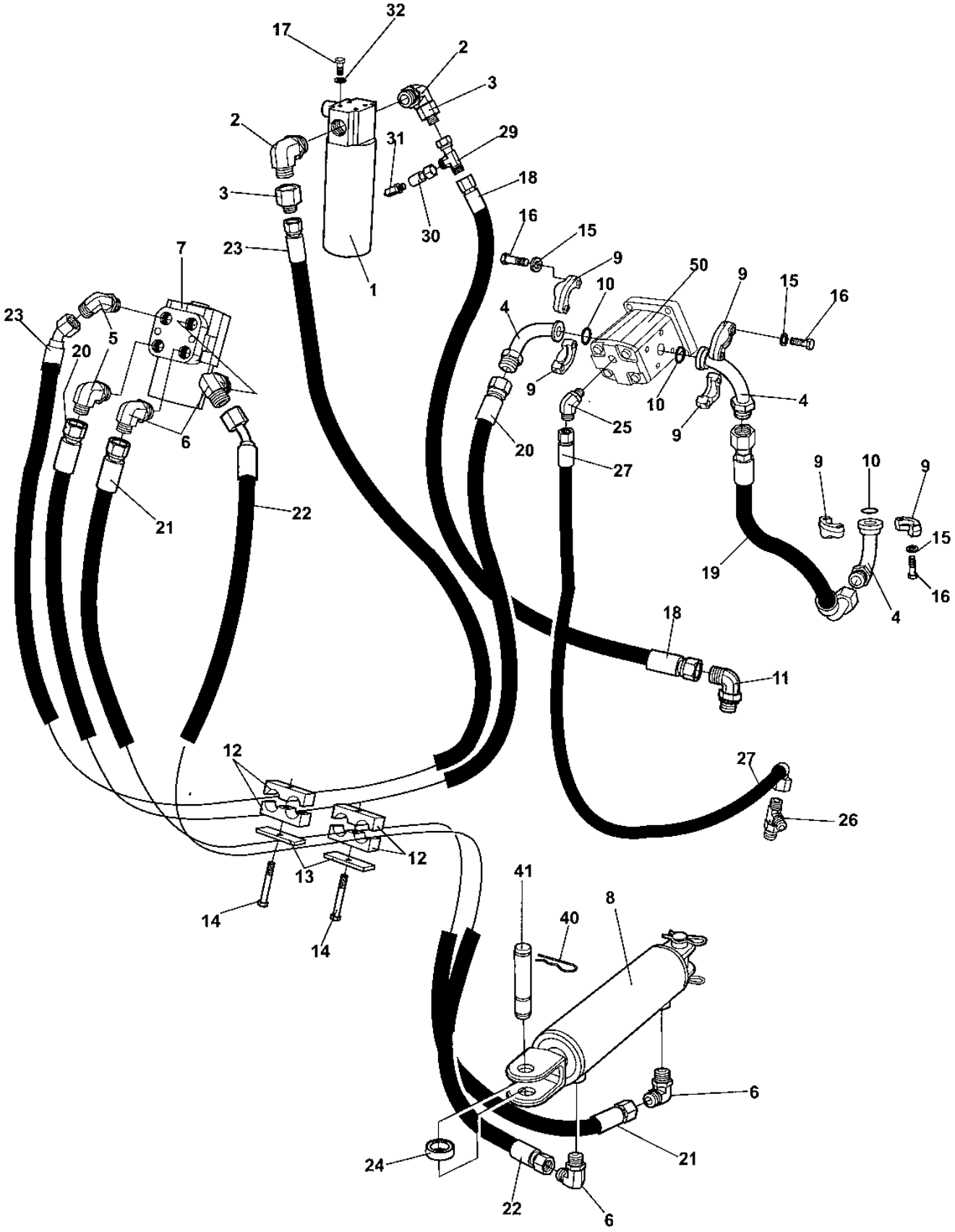

Steering system

Item	Part No	Rem	Qty	Description		Code
1	4700359550		1	Hydraulic oil filter, cpl		
	4700359551		1	.Filter head		
	4700359552		1	.Cleaning filter element	Maximum 50 hours use	
	4700372229	A	1	.Hydraulic oil filter element		A
2	4700791321		2	Elbow adapter 90		
3	4700791791		2	Reducer		
4	4700792198		3	Flange fitting		
5	4700791841		2	Elbow 90 orfs		
6	4700791840		4	Elbow adapter 90, O-ring with swivel		
7	4700378153		1	Pilot valve (Page 88)		
8	4700378187		1	Steering cylinder (Page 90)		
9	4700232145		6	Split flange		
10	4700904774		3	O-ring		
11	4700792151		1	Elbow adapter 90		
12	4700903456		2	Pipe clamp		
13	4700287294		2	Cover plate		
14	4700500067		2	Screw	M8-1,25x55 8,8	
15	4700904229		12	Washer	8,4x16x1,5	
16	4700500022		12	Screw	M8x30H 8.8 A2K	
17	4700500048		4	Screw	M10-1,5x20 8,8	
18	4700483722		1	Hydraulic hose		
19	4700483843		1	Hydraulic hose		
20	4700483844		1	Hydraulic hose		
21	4700483845		1	Hydraulic hose		
22	4700483846		1	Hydraulic hose		
23	4700483849		1	Hydraulic hose		
24	4700379069		2	Bearing		
25	4700791836		1	Elbow adapter 45		
26	4700791862		1	Tee-connector		
27	4700483872		1	Hydraulic hose		
29	4700791798		1	T-connector		
30	4700792219		1	Straight connector		
31	4700923405		1	Measuring nipple		D
32	4700904230		4	Washer		
40				Hair clip		
41				Shaft		
50		B		Fan motor		

A) Spare part Filter element for ordinary service.
B) See Cooling system.

4700378153 Pilot valve

18884

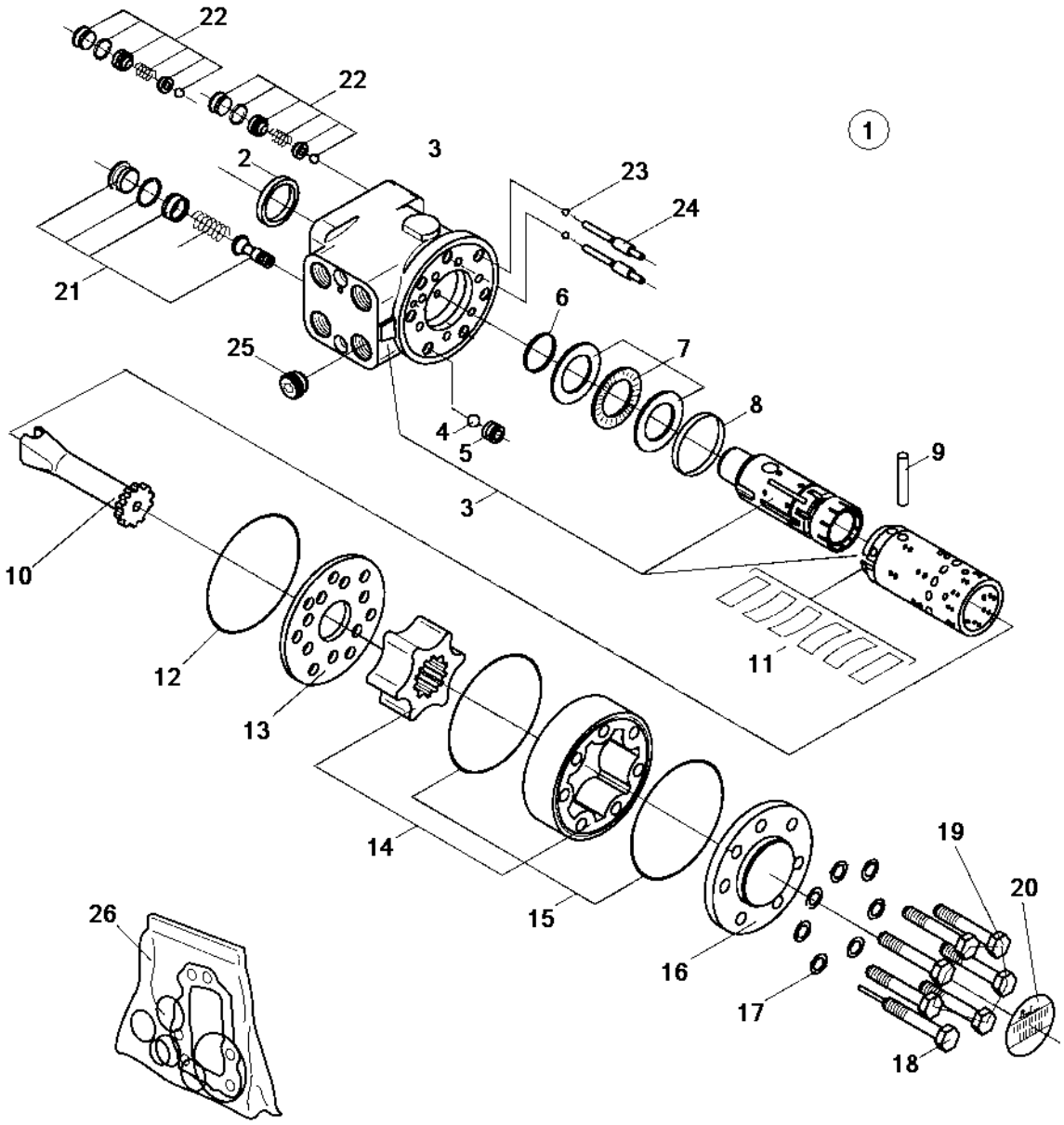

4700378153 Pilot valve

Item	Part No	Rem	Qty	Description	Code
1			1	Pilot valve, cpl	
2		A	1	.Seal ring	
3			1	.Housing, seats and spool	
4			1	.Ball	
5			1	.Threaded bushing	
6		A	1	.O-ring	
7			1	.Bearing assembly	
8			1	.Ring	
9			1	.Cross pin	
10			1	.Cardan shaft	
11			1	.Set off springs	
12		A	1	.O-ring	
13			1	.Distributor plate	
14			1	.Gear wheel set	
15		A	2	.O-ring	
16			1	.End cover	
17		A	7	.Washer	
18			1	.Screw with pin	
19			6	.Screw	
20			1	.Name plate	
21			1	.Pilote relief valve	
22			2	.Shock valve	
23			2	.Ball	
24			2	.Bushing with pin	
25			1	.Check valve	
26	4700935429		1	.Seal kit	

A) Included in seal kit, item 26

4700378187 Steering cylinder

18810

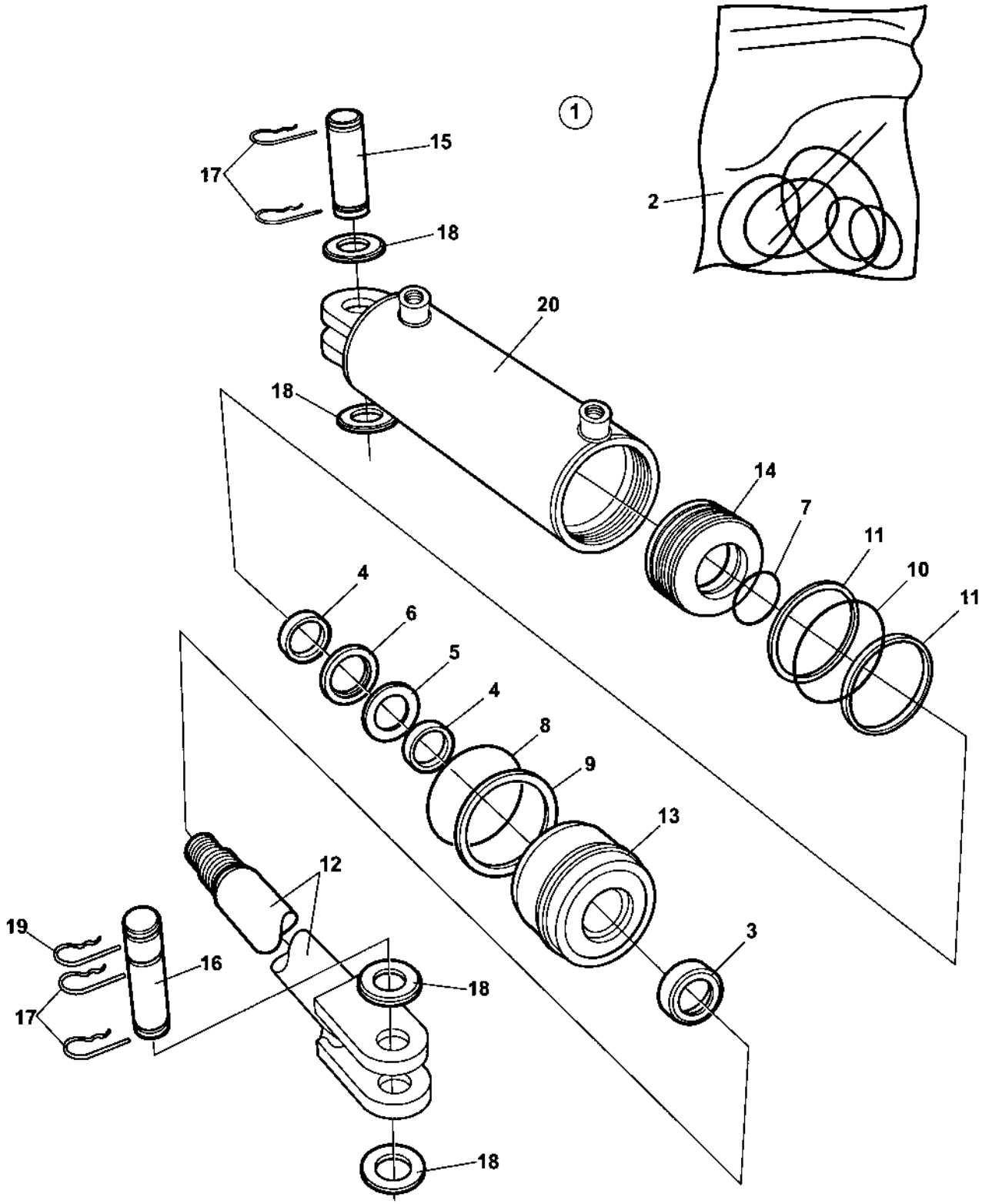

4700378187 Steering cylinder

Item	Part No	Rem	Qty	Description		Code
1	4700378187		1	Steering cylinder (Page 90)		
2	4700939398		1	.Seal kit		
3			1	..Seal		
4			2	..Seal		
5			1	..Seal		
6			1	..Seal		
7			1	..O-ring		
8			1	..O-ring		
9			1	..Back-up ring		
10			1	..Seal		
11			1	..Seal		
12	4700945162		1	..Piston rod		
13	4700939394		1	..Steering		
14	4700939397		1	..Piston		
15	4700945161		1	..Shaft		D
16	4700945161		1	..Shaft		D
17	4700635061		4	..Hair clip		D
18	4700600016		4	..Washer	26x45x4	
19		A	1	..Hair clip		
20	4700945163		1	..Cylinder tube		

A) Not valid for this model

Brake system

18332

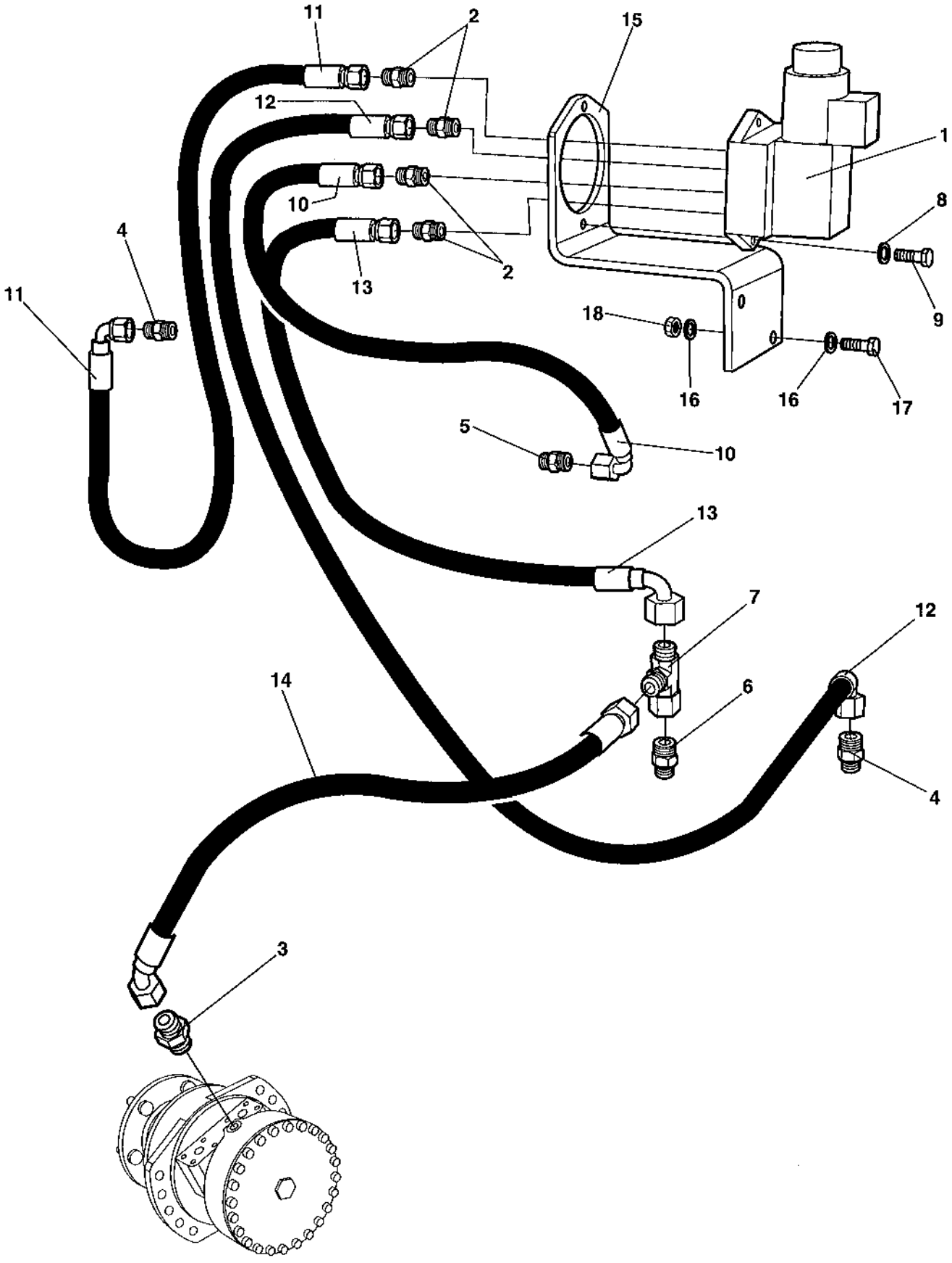

Brake system

Item	Part No	Rem	Qty	Description	Code
1	4700378537		1	Brake valve, cpl	
2	4700791542		4	Straight connector	
3	4700791914		1	Straight connector orfs	
4	4700791537		2	Straight connector	
5	4700791538		1	Straight connector	
6	4700791536		1	Straight connector	
7	4700791414		1	T-connection, O-ring with swivel	
8	4700904228		2	Washer	
9	4700500040		2	Screw	M6-1x20 8,8
10	4700483835	A	1	Hydraulic hose	
11	4700483836	B	1	Hydraulic hose	
12	4700483837	C	1	Hydraulic hose	
13	4700483847	D	1	Hydraulic hose	
14	4700483848		1	Hydraulic hose	
15	4700379434		1	Bracket	
16	4700904229		4	Washer	8,4x16x1,5
17	4700500021		2	Screw	M8-1,25x25 8.8
18	4700570005		2	Nut	M8

A) Mounted into P-port on Brake valve.
B) Mounted into A-port on Brake valve.
C) Mounted into T-port on Brake valve.
D) Mounted into B-port on Brake valve.

Flow divider Option

18639

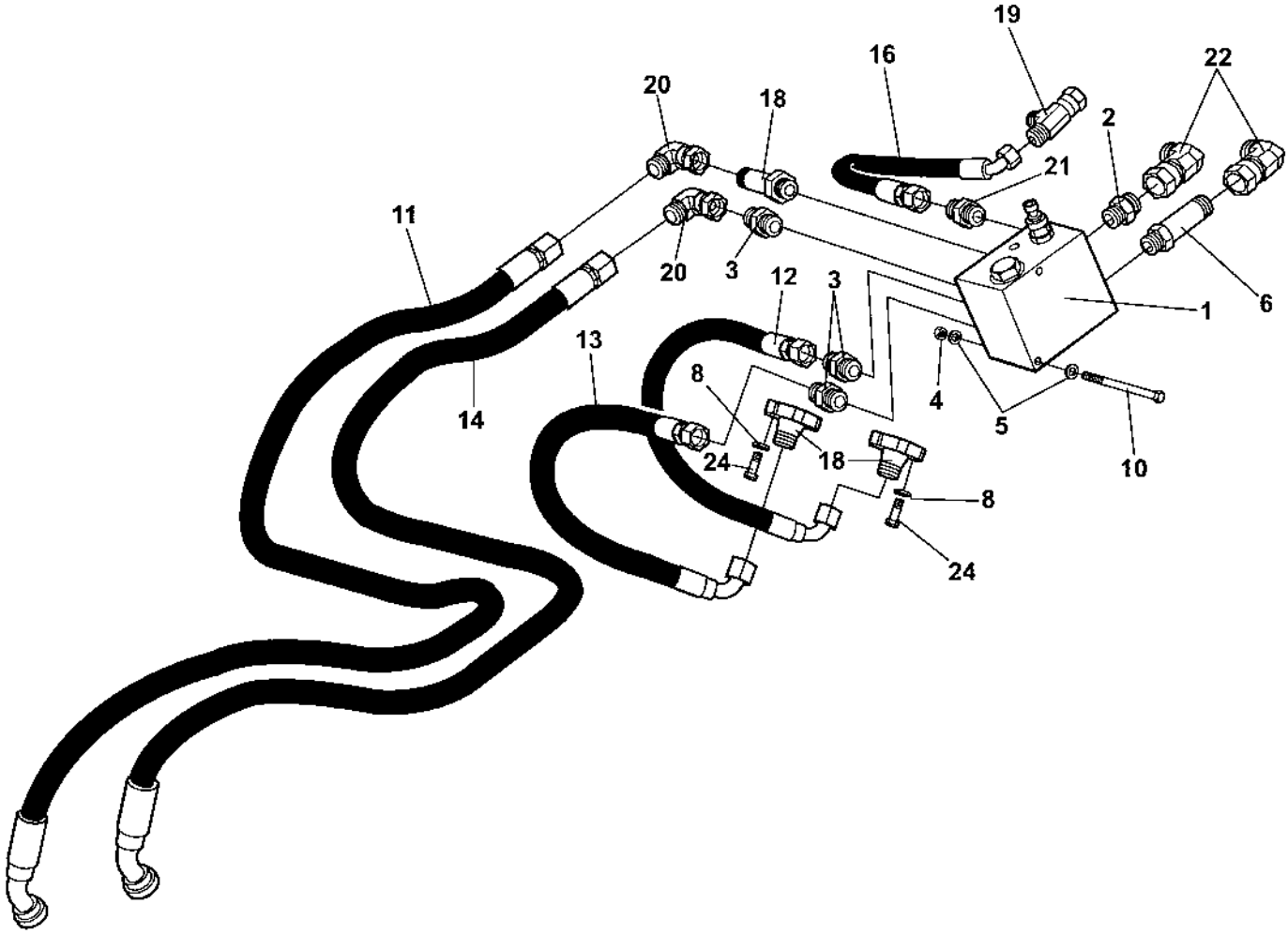

Flow divider Option

Item	Part No	Rem	Qty	Description		Code
1	4700378302		1	Flow divider (Page 96)		
2	4700791853		1	Straight connector orfs		
3	4700791632		3	Straight connector orfs		
4	4700570005		2	Nut	M8	
5	4700904229		4	Washer	8,4x16x1,5	
6	4700792425		1	Straight connector orfs		
8	4700904637		8	Washer		
10	4700500170		2	Screw	M8x140 8.8	
11	4700483986		1	Hydraulic hose		
12	4700483832		1	Hydraulic hose		
13	4700483832		1	Hydraulic hose		
14	4700483984		1	Hydraulic hose		
16	4700483945		1	Hydraulic hose		
18	4700792426		1	Straight connector orfs		
19	4700791832		1	Tee-connector		
20	4700904766		2	Elbow adapter 90		
21	4700904641		1	Connector		
22	4700904584		2	Elbow connector 90		
23	4700791857		2	Straight flange connector		
24	4700502036		8	Screw	3/8"-16UNCx11/4"8.8	

4700378302 Flow divider

18895

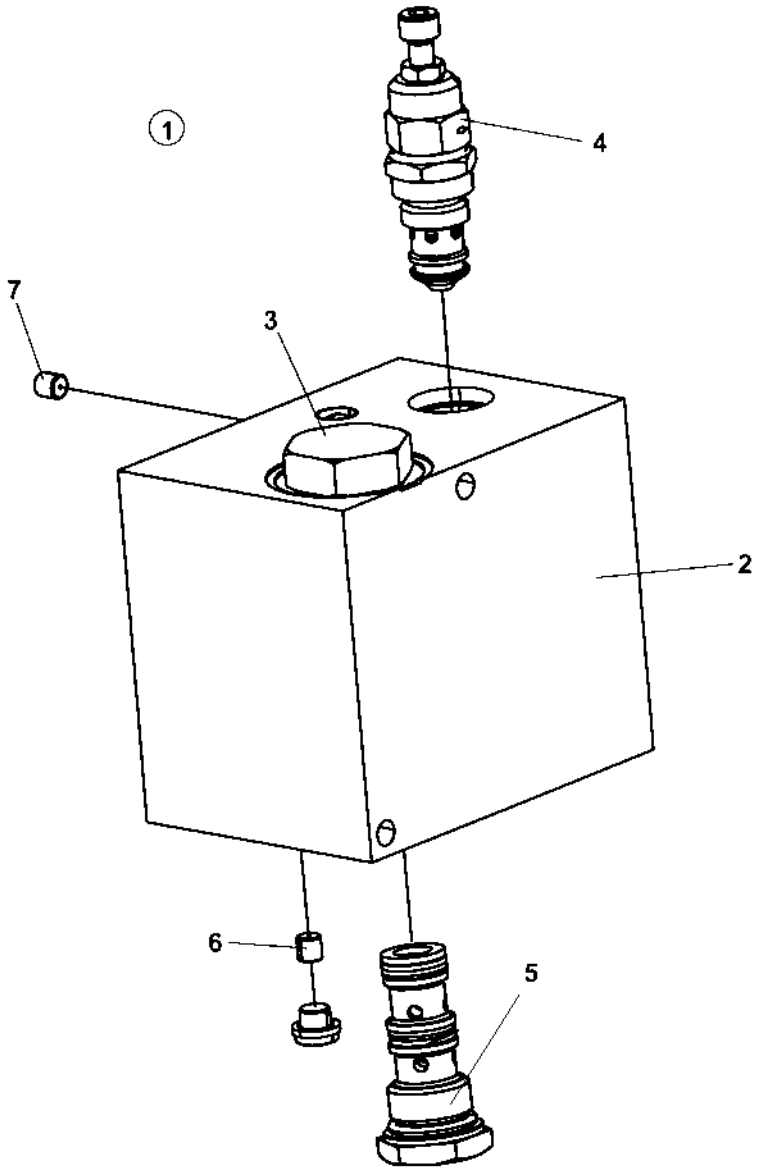

4700378302 Flow divider

Item	Part No	Rem	Qty	Description	Code
1	4700378302		1	Flow divider (Page 96)	
2			1	.Valve block	
3	4700950581		1	.Orifice	
4	4700950582		1	.Pressure relief valve	
5	4700950583		1	.Control valve	
6	4700950610		1	.Orifice	
7	4700950609		1	.Orifice	

Electrical equipment

Item	Part No	Rem	Qty	Description	Code
10				Electric system (Page 100)	
15				Electrical equipment, levelling blade (Page 102)	
20				Control panel Up to ECN08360 (Page 104)	
21				Control panel From ECN08360 (Page 106)	
30				Working lights, ROPS and Rotating beacon (Page 108)	
40				Driving and direction light (Page 110)	

Electric system

18347-1

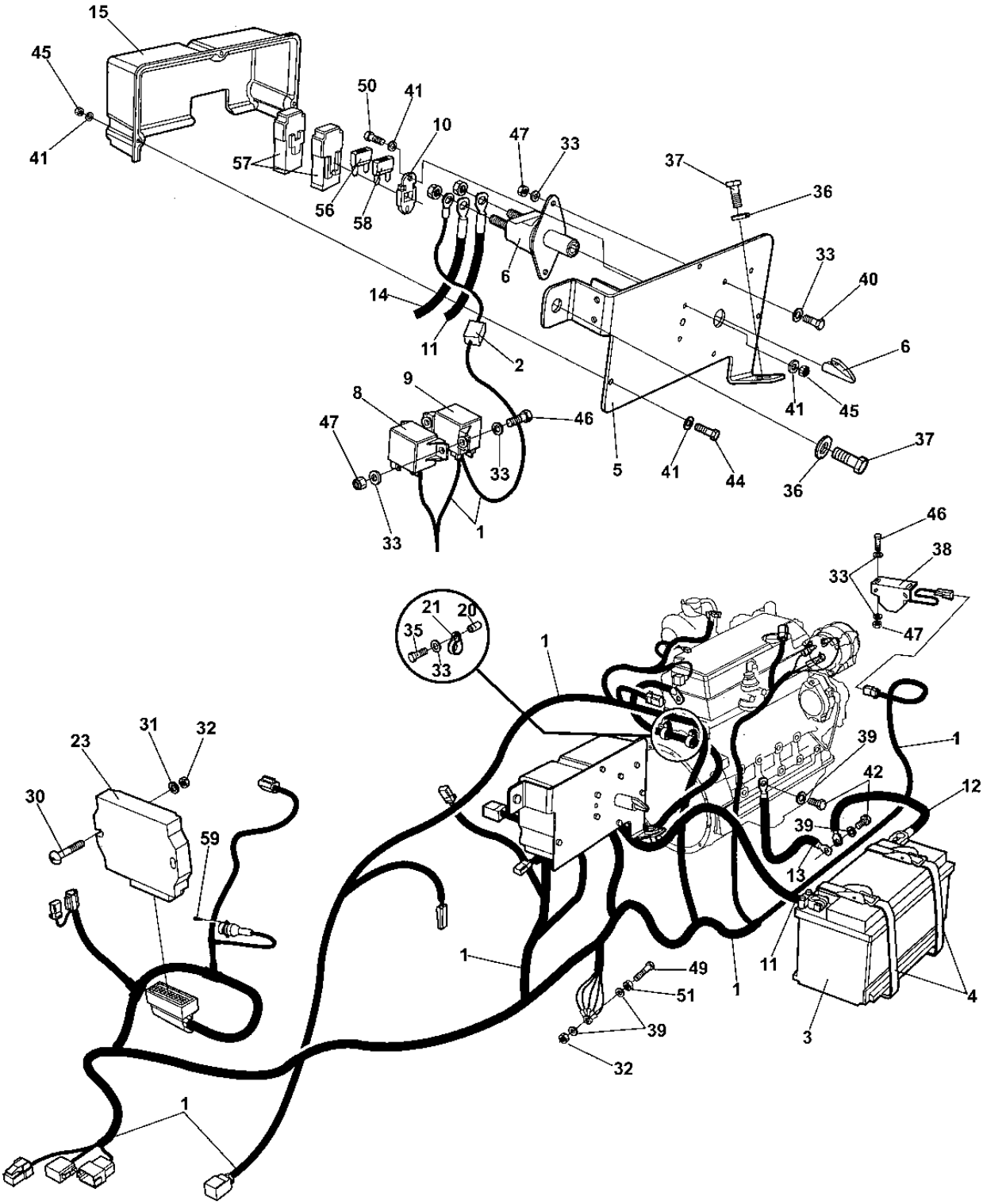

Electric system

Item	Part No	Rem	Qty	Description		Code
1	4700394657	E	1	Cable harness		
2	4700791477		1	.Fuse holder		
	4700791514	A	1	.Fuse	100A - Blue	D
3	4700791719		1	Battery		
4	4700389662		2	Strap		
5	4700390394		1	Holder		
6	4700903640		1	Battery switch		D
	4700903641		1	.Key		D
8	4700904448	C	1	Relay		D
9	4700791183	D	1	Relay		D
10	4700904036		1	Fuse holder		
11	4700792282		1	Battery cable		
12	4700792195		1	Battery cable		
13	4700792196		1	Connection cable, coarse		
14	4700792283		1	Connection cable, coarse		
15	4700387722		1	Protecting cover		
20	4700372664		2	Reducing nipple		
21	4700921028		2	Clamp		
23	4700378745		1	Control unit, ECU		
	4700392165		1	.Software		
30	4700792134		2	Bolt		
31	4700904556		2	Washer	8,4x16x3,0	
32	4700586003		3	Lock nut	M8	
33	4700904228		14	Washer		
35	4700500013		2	Screw	M6-1x16 8,8	
36	4700904557		2	Washer		
37	4700500028		2	Screw		
38	4700904911		1	Back-up alarm		
39	4700904229		4	Washer	8,4x16x1,5	
40	4700500040		2	Screw	M6-1x20 8,8	
41	4700904281		10	Washer		
42	4700500053		2	Screw	M8x20H 8.8	
44	4700500006		3	Screw	M5x16	
45	4700586001		5	Lock nut		
46	4700500075		4	Screw	M6-1,0x25 8.8	
47	4700586002		7	Lock nut		
49	4700903768		1	Threaded stud		
50	4700500060		2	Screw	M5-0,8x20 8.8	
51	4700570005		1	Nut	M8	
56	4700904038		1	Fuse	40A	D
57	4700904032		2	Fuse holder		
58	4700904294		1	Fuse		
59	4700541534		3	Screw	2,9X9,5	
60	4700313041		N	Cable ties		

A) Pre-heater.
C) Start.
D) Pre-heater.
E) Main harness

Electrical equipment, levelling blade

18650

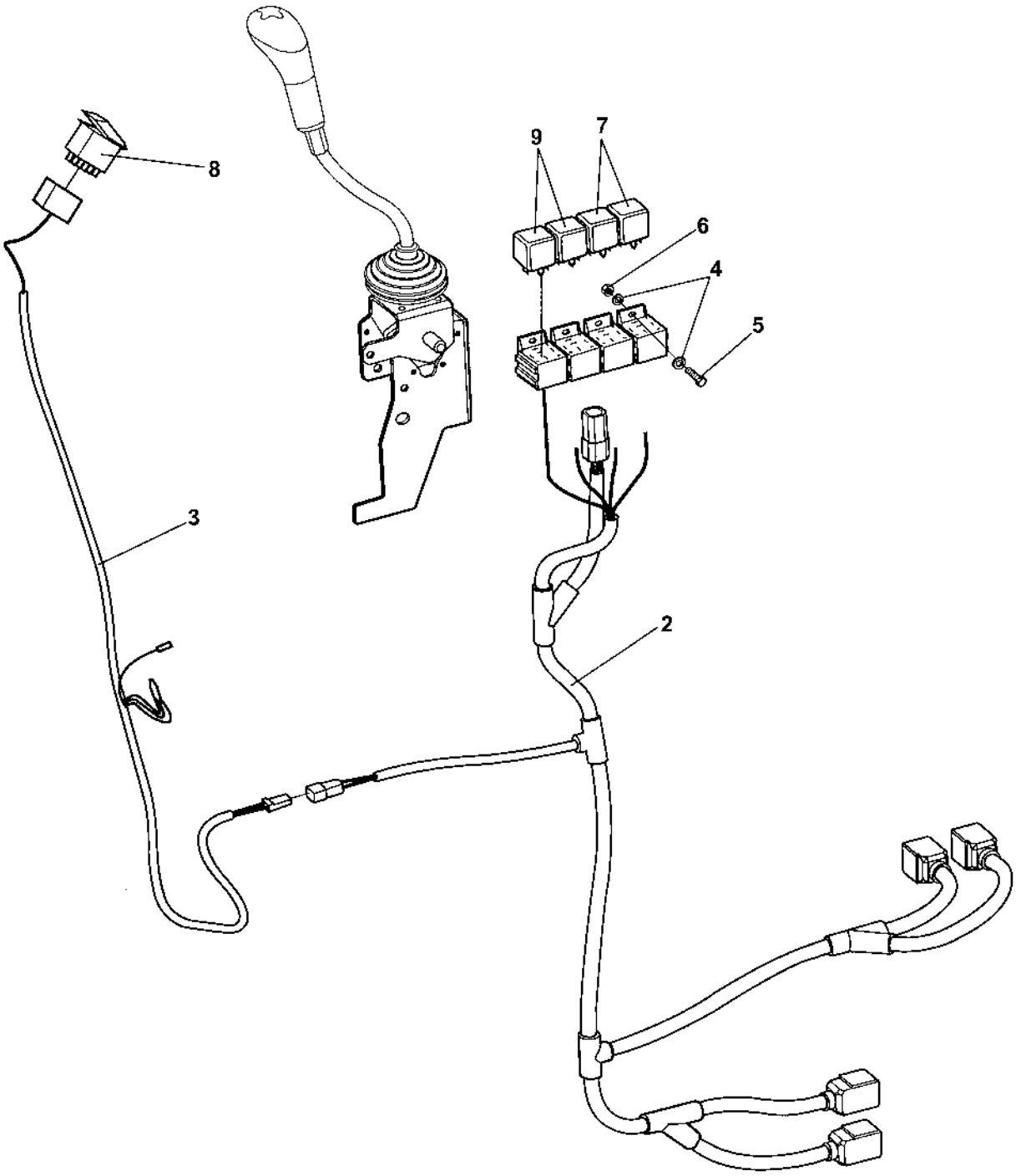

Electrical equipment, levelling blade

Item	Part No	Rem	Qty	Description		Code
2	4700393601		1	Cable harness		
3	4700393602		1	Cable harness		
4	4700904281		8	Washer		
5	4700500006		4	Screw	M5x16	
6	4700586001		4	Lock nut		
7	4700903956		2	Relay		D
8	4700792240	B	1	Switch, levelling blade		
9	4700903956	A	2	Relay		D

A) For levelling blade tiltable
B) See control panel

Control panel

18346-1

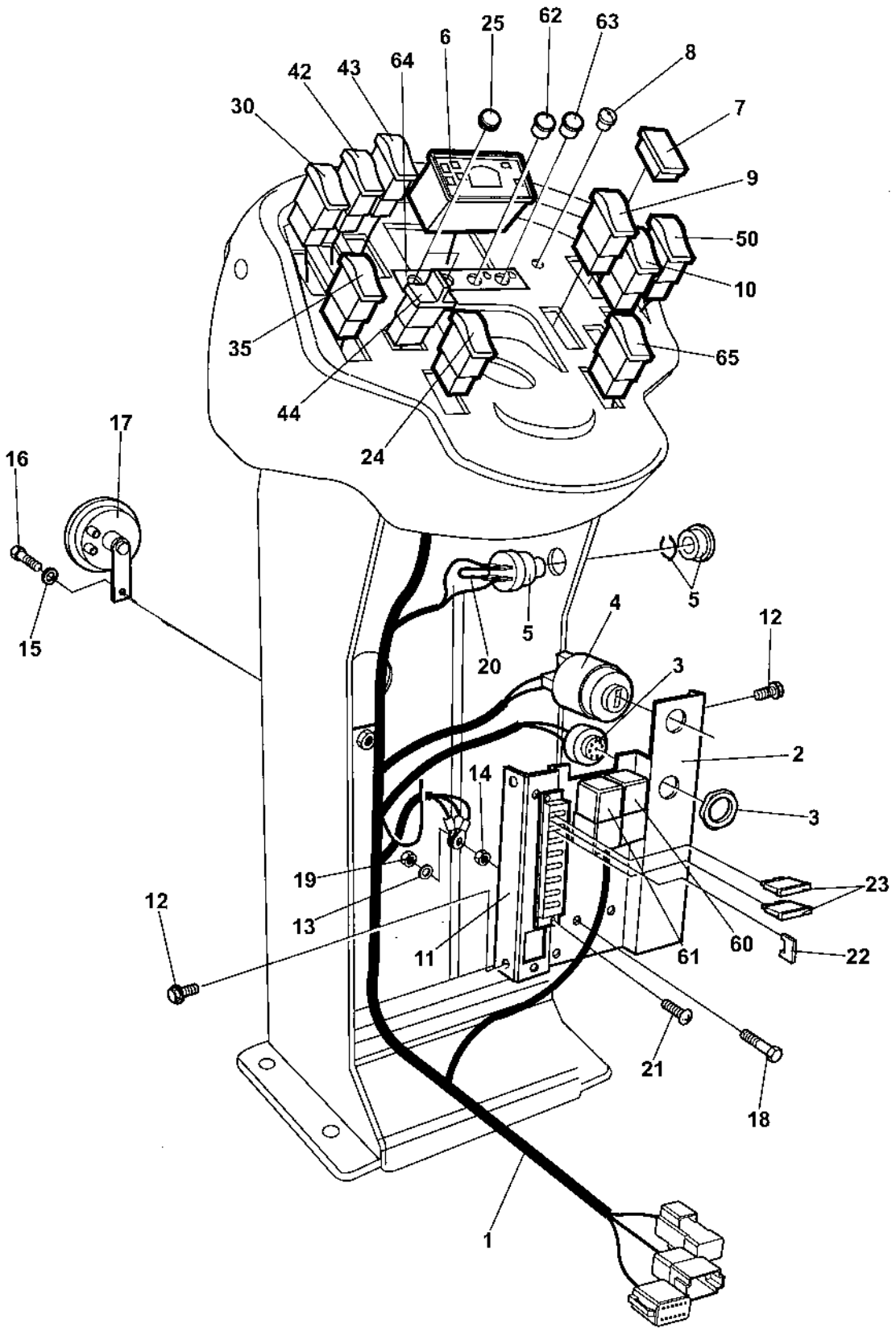

Control panel

Item	Part No	Rem	Qty	Description		Code
1	4700394734	B	1	Cable harness		
2	4700387683		1	Distribution control plate		
3	4700385599		1	Buzzer		
4	4700238158		1	Ignition switch		
	4700940451		1	.Key		
5	4700791647		1	Emergency stop		
6	4700395394		1	Control panel		
7	4700791588		N	Panel plug		
8	4700792083		N	Plug		
9	4700791578		1	Switch, horn		
10	4700792203		1	Switch, vibration		
11	4700791185		1	Fuse box		
12	4700903782		4	Screw	M5x12	
13	4700904228		2	Washer		
14	4700570004		1	Nut	M6X1,00 -8 A2K	
15	4700904229		1	Washer	8,4x16x1,5	
16	4700500053		1	Screw	M8x20H 8.8	
17	4700999027		1	Horn		D
18	4700500075		1	Screw	M6-1,0x25 8.8	
19	4700586002		1	Lock nut		
20	4700791517		1	Connection cable		
21	4700901767		2	Screw	ST3,5x9,5 Black	
22	4700791211		N	Contact bridge		
23	4700901228		N	Fuse	15A	
	4700901227		N	Fuse	10A	B
	4700901225		N	Fuse	5A	B
	4700903741		N	Fuse	20A Yellow Medium	B
24	4700791582		1	Switch, parking brake		
25	4700792320		2	Plug		
30	4700791587	A	1	Switch, working light		
35	4700791585	A	1	Switch, rotating beacon		
42	4700791583	A	1	Switch, driving light		
43	4700791584	A	1	Switch, hazard flashers		
44	4700792413	A	1	Switch, drive direction		
50	4700792240	A	1	Switch, levelling blade		
60	4700904989		1	Flash relay	Option	D
61	4700903956		1	Relay		D
62	4700792435		1	Pilot lamp	Red	
	4700792432		1	Illuminated block red		
63	4700792319		1	Pilot lamp	Yellow	
	4700792315		1	Illuminated block yellow		
64	4700394061		1	Decal		
65	4700792679		1	Switch, RPM		

A) Option
B) Control panel

Control panel

18346-2

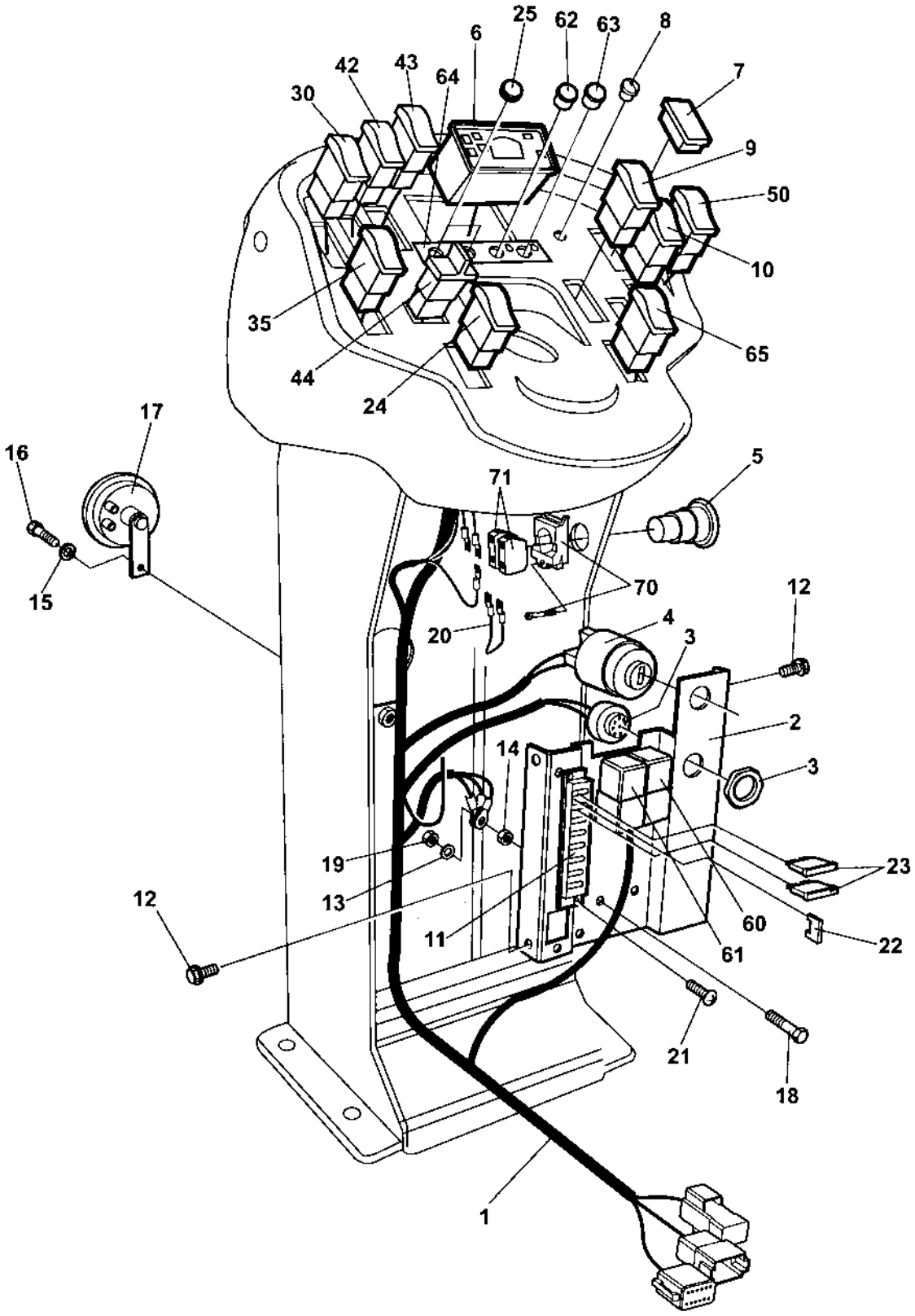

Control panel

Item	Part No	Rem	Qty	Description		Code
1	4700396927	B	1	Cable harness		
2	4700387683		1	Distribution control plate		
3	4700385599		1	Buzzer		
4	4700238158		1	Ignition switch		
	4700940451		1	.Key		
5	4700791739		1	Emergency stop		
6	4700395394		1	Control panel		
7	4700791588		N	Panel plug		
8	4700792083		N	Plug		
9	4700791578		1	Switch, horn		
10	4700792203		1	Switch, vibration		
11	4700791185		1	Fuse box		
12	4700903782		4	Screw	M5x12	
13	4700904228		2	Washer		
14	4700570004		1	Nut	M6X1,00 -8 A2K	
15	4700904229		1	Washer	8,4x16x1,5	
16	4700500053		1	Screw	M8x20H 8.8	
17	4700999027		1	Horn		D
18	4700500075		1	Screw	M6-1,0x25 8.8	
19	4700586002		1	Lock nut		
20	4700343550		1	Connection cable		
21	4700901767		2	Screw	ST3,5x9,5 Black	
22	4700791211		N	Contact bridge		
23	4700901228		N	Fuse	15A	
	4700901227		N	Fuse	10A	B
	4700901225		N	Fuse	5A	B
	4700903741		N	Fuse	20A Yellow Medium	B
24	4700791582		1	Switch, parking brake		
25	4700792320		2	Plug		
30	4700791587	A	1	Switch, working light		
35	4700791585	A	1	Switch, rotating beacon		
42	4700791583	A	1	Switch, driving light		
43	4700791584	A	1	Switch, hazard flashers		
44	4700792413	A	1	Switch, drive direction		
50	4700792240	A	1	Switch, levelling blade		
60	4700904989		1	Flash relay	Option	D
61	4700903956		1	Relay		D
62	4700792435		1	Pilot lamp	Red	
	4700792432		1	Illuminated block red		
63	4700792319		1	Pilot lamp	Yellow	
	4700792315		1	Illuminated block yellow		
64	4700394061		1	Decal		
65	4700792679		1	Switch, RPM		
70	4700791733		1	Fixing collar		
71	4700791723		2	Connector		

A) Option
B) Control panel

Working lights, ROPS and Rotating beacon

18640

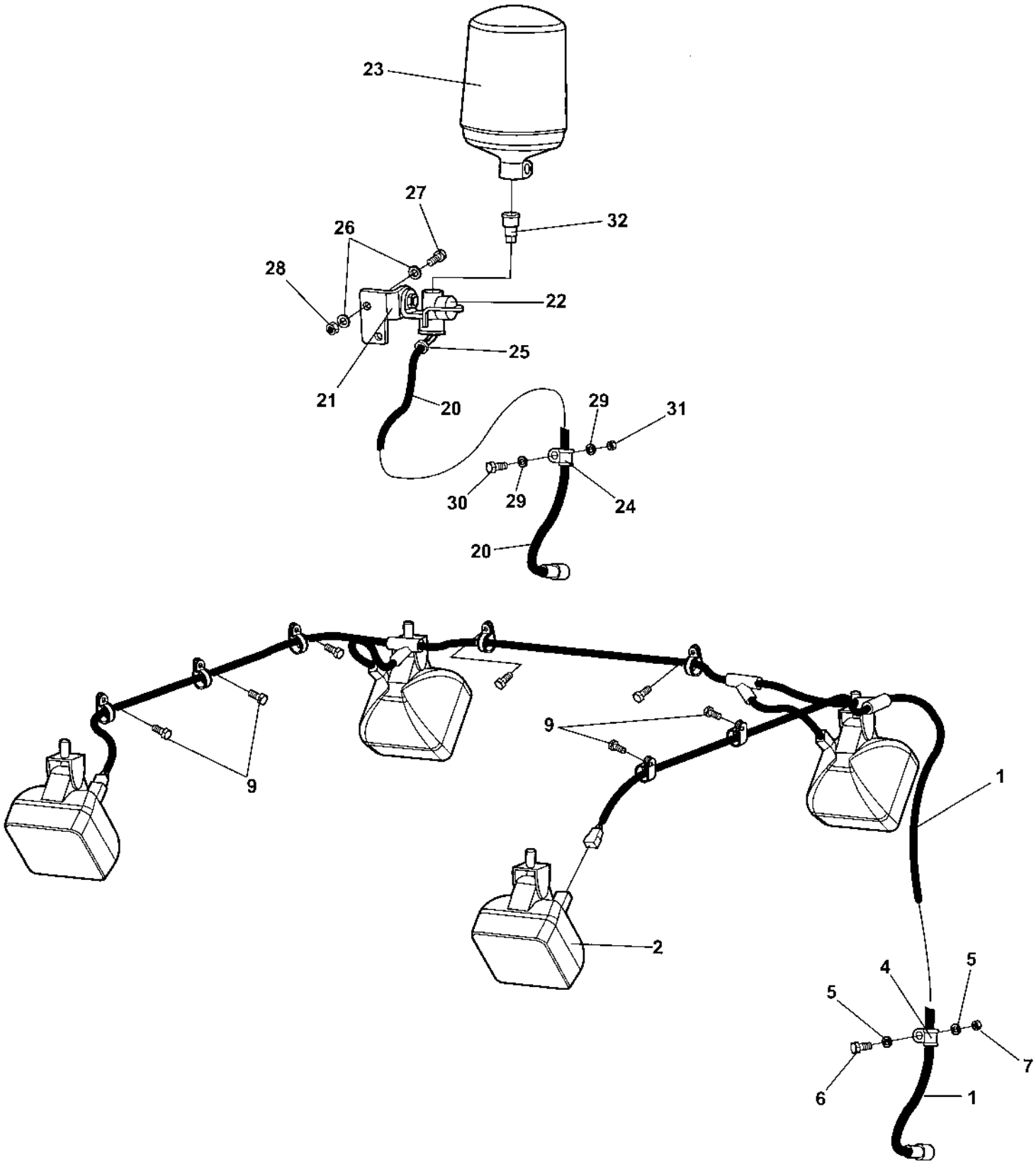

Working lights, ROPS and Rotating beacon

Item	Part No	Rem	Qty	Description		Code
1	4700378675		1	Cable harness		
2	4812110216		4	Work lamp		
	4700904230		4	Washer		
	4700586018		4	Lock nut		
4	4700921039		1	Pipe clamp		
5	4700904228		2	Washer		
6	4700500013		1	Screw	M6-1x16 8,8	
7	4700570004		1	Nut	M6X1,00 -8 A2K	
8	4700791341		8	Clamp		
9	4700541702		8	Screw	M6x12	
10	4700313041		N	Cable ties		
20	4700378774		1	Cable harness		
21	4700378980		1	Bracket		
22	4700791980		1	Rubber protection		
23	4700389577		1	Rotating beacon		D
24	4700791341		1	Clamp		
25	4700791594		1	Grommet		
26	4700904229		4	Washer	8,4x16x1,5	
27	4700500053		2	Screw	M8x20H 8.8	
28	4700570005		2	Nut	M8	
29	4700904228		2	Washer		
30	4700500013		1	Screw	M6-1x16 8,8	
31	4700570004		1	Nut	M6X1,00 -8 A2K	
32	4700791981		1	Connector plug		

Driving and direction light

18641

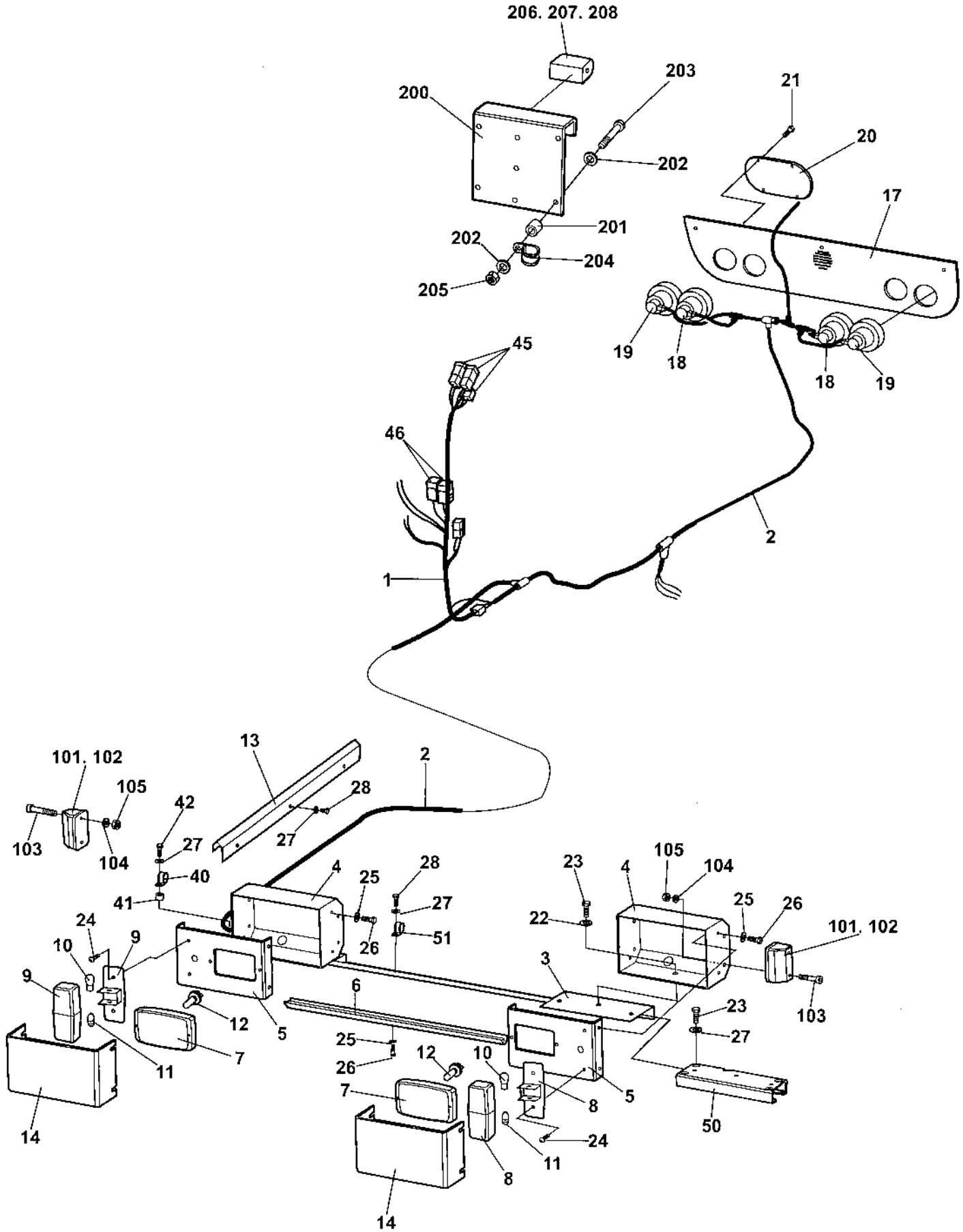

Driving and direction light

Item	Part No	Rem	Qty	Description		Code
1	4700378676		1	Cable harness		
2	4700378677		1	Cable harness		
3	4700384163		2	Protection		
4	4700374029		2	Lamp shield		
5	4700374030		2	Bracket		
6	4700379206		1	Cable holder		
7	4700902066		2	Headlight		
	4700904313	B	1	Headlight		
8	4700904315		1	Direction lamp		
9	4700904316		1	Direction lamp		
10	4700928502		2	Bulb	21w	B
11	4700985014		2	Bulb	5w	B
12	4700900790		2	Bulb	60/55w H4	B
13	4700388465		1	Cable holder		
14	4700374120		2	Protecting cover		
17	4700378681		1	Cover plate		
18	4700791955		2	Brake/position light		
19	4700791954		1	Direction indicator		
20	4700379067		2	Protector		
21	4700901767		8	Screw	ST3,5x9,5 Black	
22	4700904640		6	Washer	8,4x22x3	
23	4700500053		6	Screw	M8x20H 8.8	
	4700500053	C	14	Screw	M8x20H 8.8	
24	4700503010		4	Screw		
25	4700904228		11	Washer		
	4700904228	C	8	Washer		
26	4700500013		11	Screw	M6-1x16 8,8	
	4700500013	C	8	Screw	M6-1x16 8,8	
27	4700904229		4	Washer	8,4x16x1,5	
	4700904229	C	2	Washer	8,4x16x1,5	
28	4700500019		3	Screw	M8x16H 8.8 A2K	
	4700500019	C	2	Screw	M8x16H 8.8 A2K	
40	4700921072		1	Clamp		
41	4700343748		1	Spacer sleeve		
42	4700500022		1	Screw	M8x30H 8.8 A2K	
45		A		Switch		
46		A		Relays		
50	4700392915	C	1	Holder		
51	4700921072		3	Clamp		
101	4700902064		2	Direction lights		
102	4700985013		2	Bulb	12V,5W	B
103	4700926537		4	Screw	M5-0,8x16H 8,8	
104	4700904281		4	Washer		
105	4700586001		4	Lock nut		
200	4700355797		1	Licence plate holder		
201	4700371728		4	Spacer sleeve		
202	4700904228		8	Washer		
203	4700500061		4	Screw	M6-1X35 8,8	
204	4700791341		1	Clamp		
205	4700586002		4	Lock nut		
206	4700929455		1	Licence plate light		
207	4700985013		1	Bulb	12V,5W	B
208	4700792035		1	Push-on terminal		

A) See section Control panel
B) Left hand asym.
C) With Levelling blade

Drivers platform

Item	Part No	Rem	Qty	Description	Code
10				Drivers platform (Page 114)	
20				Forward and reverse control (Page 118)	
30				Forward and reverse control handle (Page 120)	
50				Rops and fops (Page 122)	

Drivers platform

18344-2

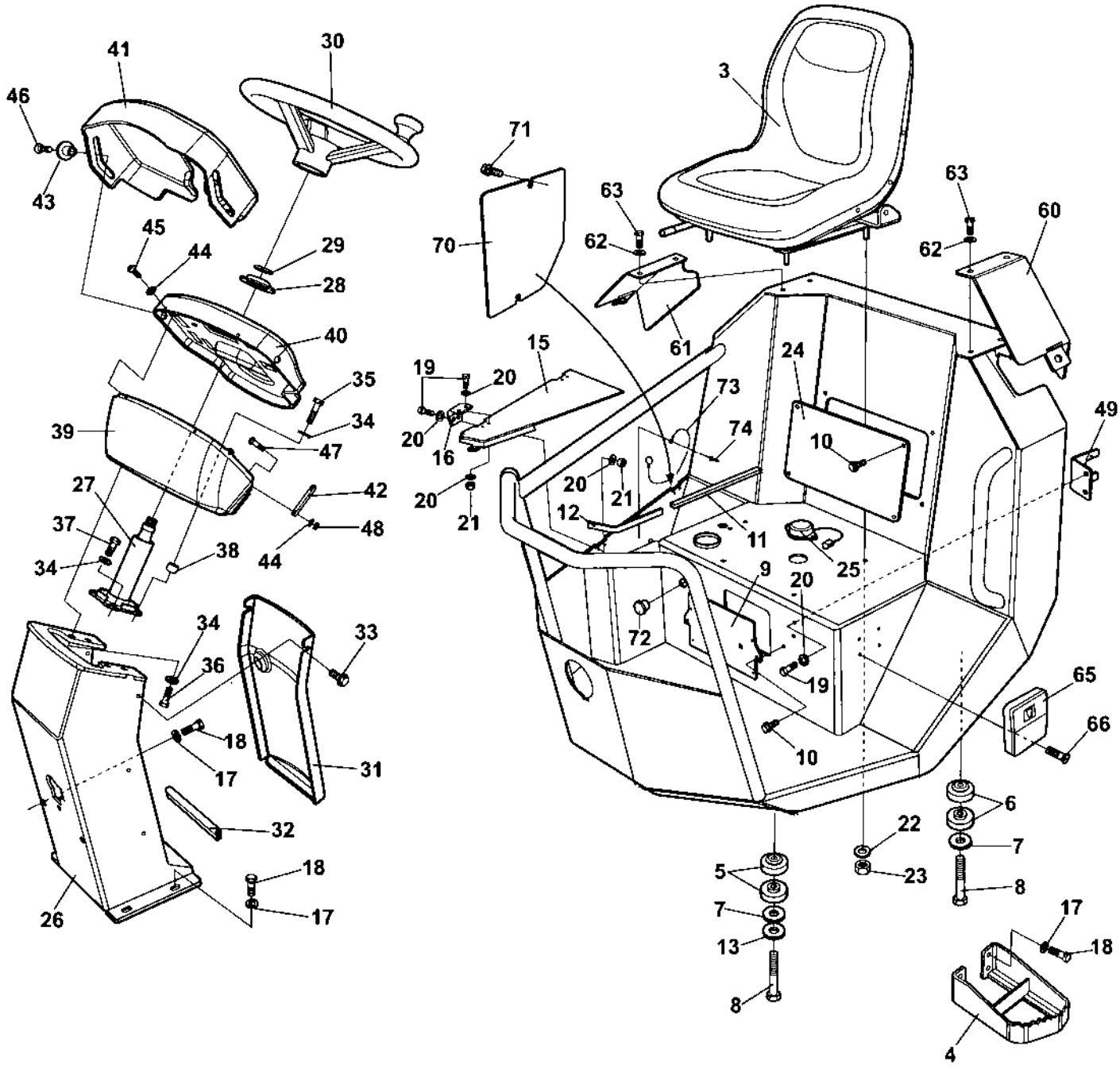

Drivers platform

Item	Part No	Rem	Qty	Description		Code
1	4700390140		1	Platform		
3	4700377556		1	Seat		
4	4700378475		1	Step		
5	4700378627		4	Shock absorber	Front	
6	4700378628		4	Shock absorber	Rear	
7	4700345666		4	Steel spacer		
8	4700500199		4	Screw	M16-2x110 8,8	
9	4700388447		1	Cover		
10	4700500505		6	Screw	M8x20 8.8	
11	4700902379	A	1XL	Edge trim		
12	4700902379	B	1XL	Edge trim		
13	4700904558		2	Washer	17X30X6 300HV	
15	4700390248		1	Cover		
16	4700903907		2	Hinge		
17	4700904557		10	Washer		
18	4700500029		10	Screw		
19	4700500040		10	Screw	M6-1x20 8,8	
20	4700904228		18	Washer		
21	4700586002		8	Lock nut		
22	4700904229		4	Washer	8,4x16x1,5	
23	4700586003		4	Lock nut	M8	
24	4700378928		1	Cover		
25	4700379636	F	1	Seat switch		
	4812155075	G	1	Seat switch		
26	4700378335		1	Control panel column		
27	4700902123		1	Steering column		
28	4700928830		1	Rubber washer		
29	4700904793		1	Washer	19x34x3	
30	4700372964		1	Steering wheel, cpl		
	4700935614		1	.Turning knob		D
	4700935613		1	.Cover		
31	4700387226		1	Column cover		
32	4700902166	C	1XL	Edge trim		
33	4700500505		2	Screw	M8x20 8.8	
34	4700904230		8	Washer		
35	4700500031		2	Screw		
36	4700500029		4	Screw		
37	4700500048		2	Screw	M10-1,5x20 8,8	
38	4700355869		2	Spacer sleeve		
39	4700387720		1	Control panel holder		
40	4700391784		1	Control panel		
41	4700387227		1	Control panel cover		
42	4700387545		1	Latch		
43	4700357855		2	Bushing		
44	4700904281		4	Washer		
45	4700904653		3	Screw	M5x16 A2-70	
46	4700513017		2	Screw	M6x30H 10,9	
47	4700500007		1	Screw	M5-0,8x22H 8,8	
48	4700791476		1	Nut	M5 -8	
49	4700394983		1	Bracket		
60	4700390366	D	1	Cover, Left,	Option	
61	4700390367	D	1	Cover, right	Option	
62	4700904228		6	Washer		

A) L=0.335M.
B) L=0,255M
C) L=0,190M
D) Used without ROPS.
F) With bayonet fitting.
G) With screws.

Drivers platform

18344-2

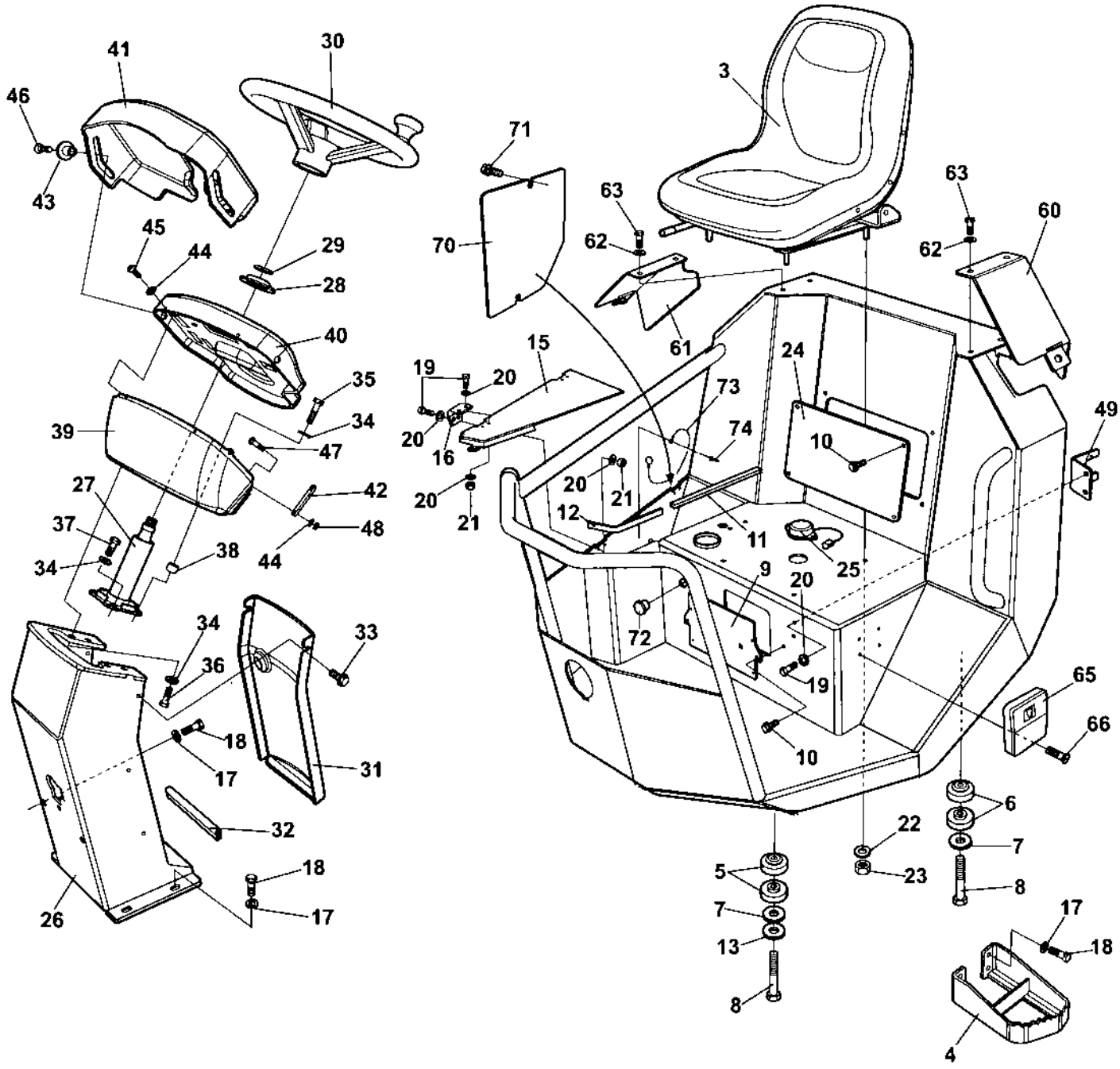

Drivers platform

Item	Part No	Rem	Qty	Description	Code
63	4700500013		6	Screw M6-1x16 8,8	
65	4700377255	E	1	Cup holder	
66	4700513027		4	Screw M4x16H 10,9	
70	4700390249		1	Cover	
71	4700904755		2	Screw M8x12 8,8 FZB	
72	4700923270		2	Protective plug	
73	4700384584		1	Wire	
74	4700904855		1	Blind rivet	

E) Option

Forward and reverse control

18351

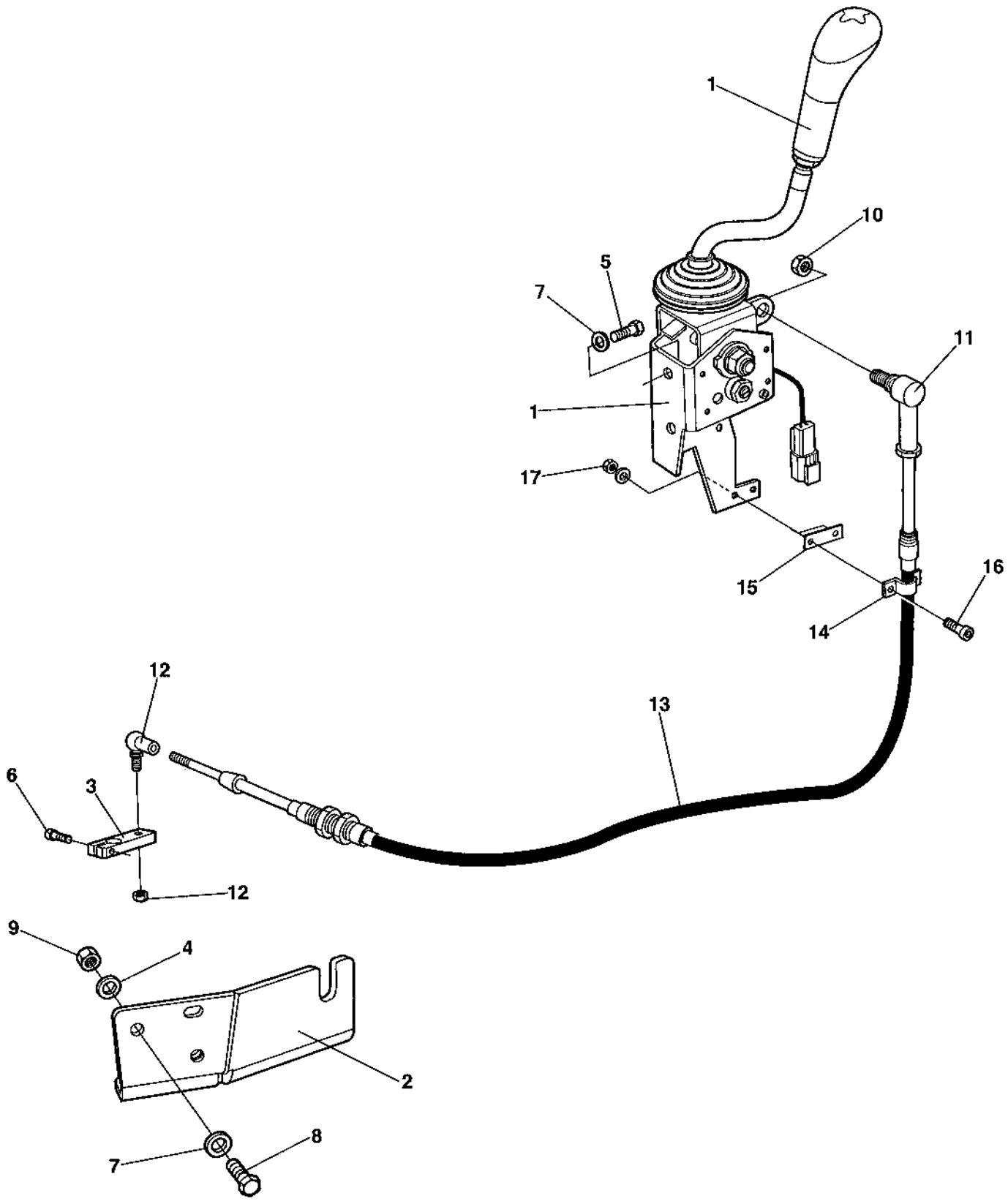

Forward and reverse control

Item	Part No	Rem	Qty	Description		Code
1			1	Forward and reverse control handle (Page 120)		
2	4700379467		1	Control bracket		
3	4700378340		1	Control lever		
4	4700904229		2	Washer	8,4x16x1,5	
5	4700508092		2	Screw		
6	4700508020		1	Screw		
7	4700904556		4	Washer	8,4x16x3,0	
8	4700500022		2	Screw	M8x30H 8.8 A2K	
9	4700570005		2	Nut	M8	
10	4700586003		1	Lock nut	M8	
11	4700377019		1	Ball joint		
12	4700416034		1	Ball joint		D
13	4700377024	A	1	Cable	Forward/Reverse	
14	4700377020		1	Clamp		
15	4700377021		1	Spacer		
16	4700926537		2	Screw	M5-0,8x16H 8,8	
17	4700586001		2	Lock nut		

A) L=1900MM

Forward and reverse control handle

18071-2

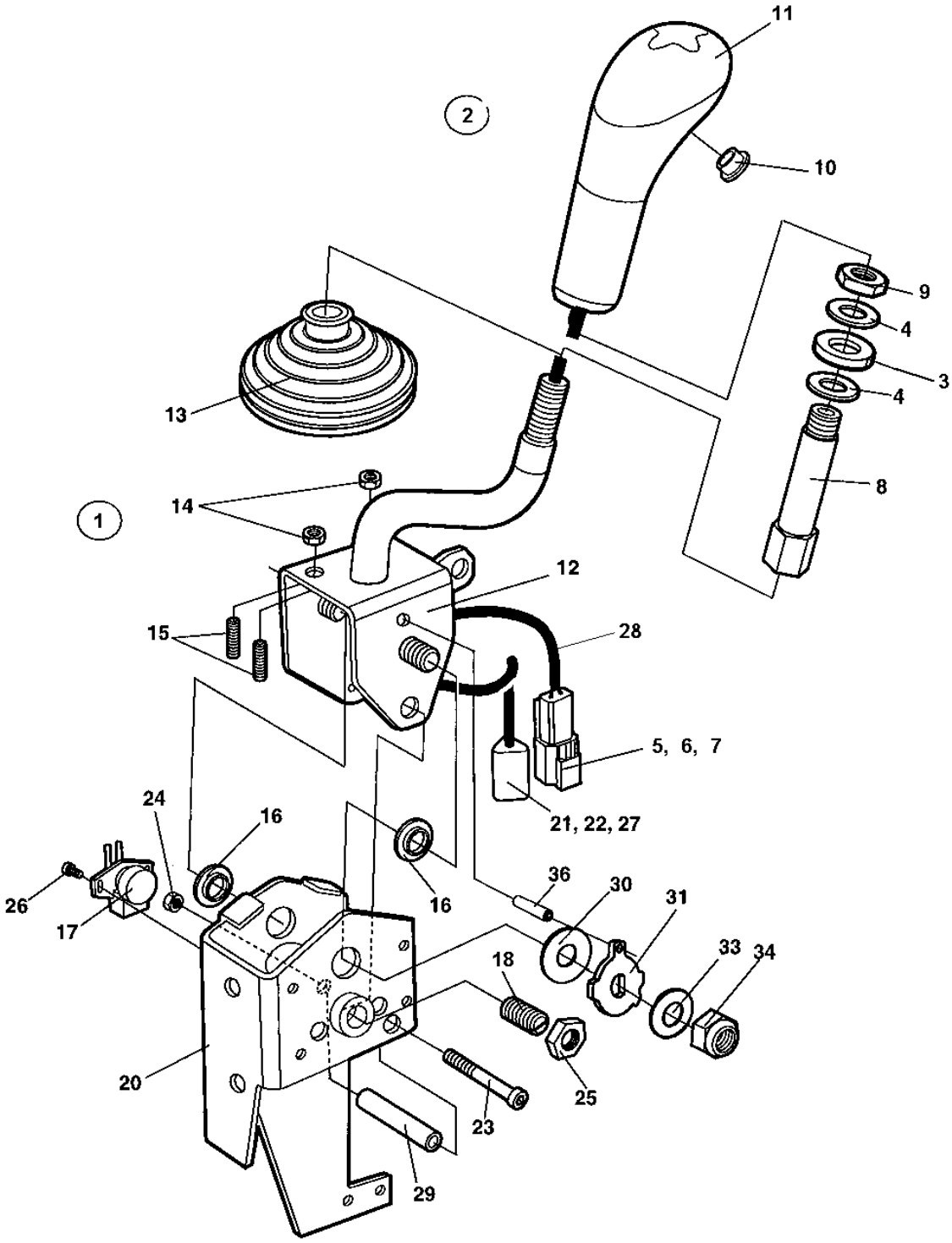

Forward and reverse control handle

Item	Part No	Rem	Qty	Description	Code
1	4700945407		1	Lever, cpl	
2	4700940374		1	.Handle kit, cpl	
			1	..Handle	
	4700945729		1	...Push-button switch	
			1	...Cable	
			1	..Lockfluid	
			1	..Service information	
3			1	..Washer	
4			2	..Washer	
5			1	..Connector, receptable	
6			1	..Lock wedge	
7			2	..Pin	
8			1	..Rod	
9			1	..Nut	
10	4700377018		1	..Protection plug	
11	4700378759		1	..Handle top	
12	4700391379		1	.Lever	
13	4700377009		1	.Bellows	
14	4700570004		2	.Nut	M6X1,00 -8 A2K
15	4700377015		2	.Set screw	
16	4700391381		1	Bushing	
17	4700391382		1	Potentiometer with cable	
18	4700377016		1	Spring loaded pin	
20	4700377010		1	Bracket	
21	4700903945		1	Connector, plug	
22	4700903946		1	Lock wedge	
23	4700508068		1	Screw	
24	4700904563		1	Lock nut	M6
25	4700927233		1	Nut	
26	4700391383		1	Screw	
27	4700903947		3	Pin	
28		B	1	Cable	
29	4700377011		1	Spacer	
30	4700377012		1	Friction washer	
31	4700391380		1	Cam washer	
33	4700377014		1	Spring washer	
34	4700586019		1	Lock nut	
36	4700391386		1	Spirol pin	

B) Included in potentiometer Pos 17

Rops and fops

18348

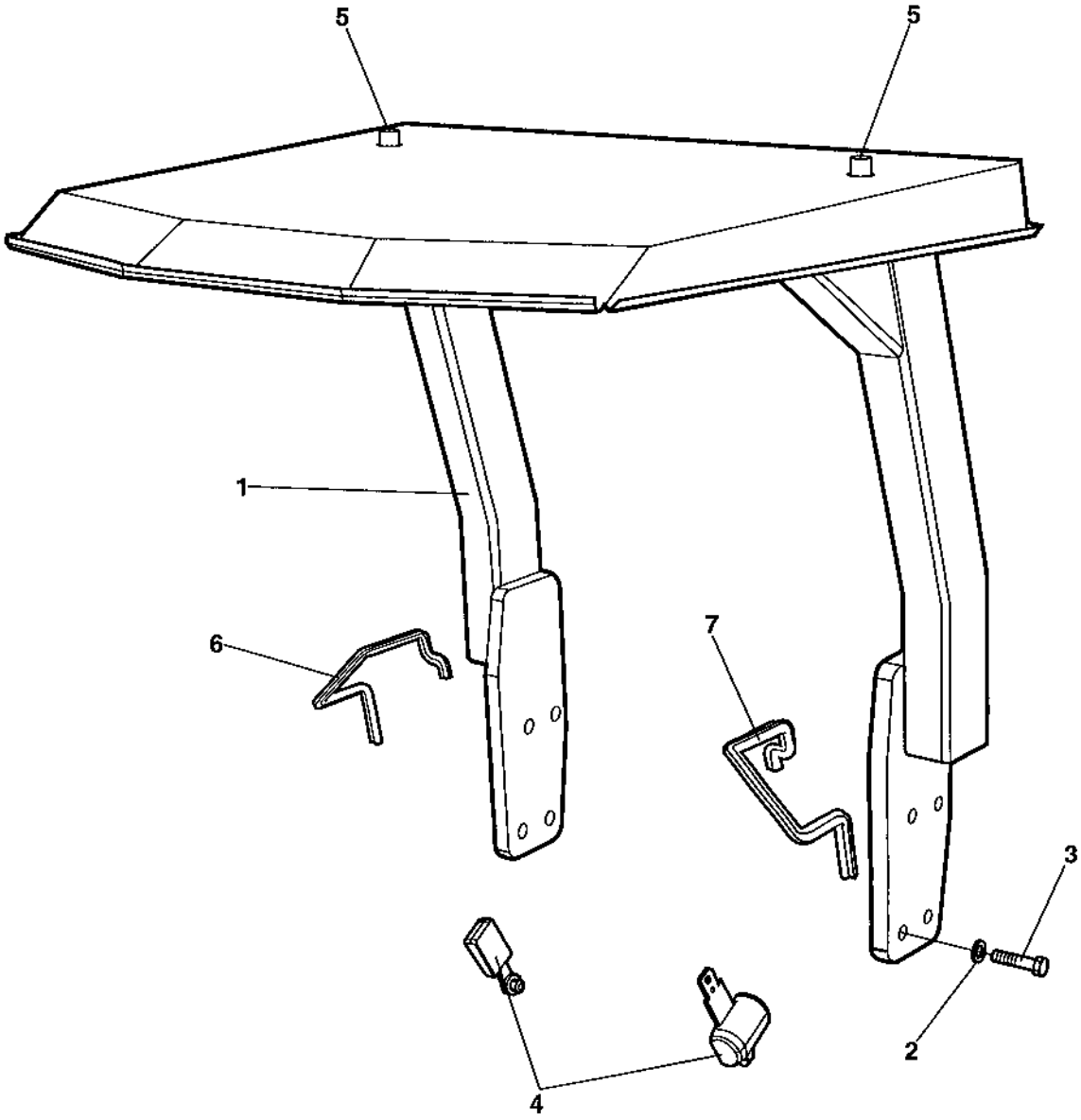

Rops and fops

Item	Part No	Rem	Qty	Description	Code
1	4700378829		1	Rops	
2	4700904232		8	Washer	
3	4700500082		8	Screw M16x70	
4	4700377677		1	Seat belt 2"	
	4700379637	A	1	Seat belt 3"	
5	4700900986		2	Plug	
6	4700902166	B	1XL	Edge trim	
7	4700902166	B	1XL	Edge trim	

A) Option
B) L=0,580M

Decals

Item	Part No	Rem	Qty	Description	Code
10				Decals (Page 126)	
20				Decals (Page 128)	

Decals

18636

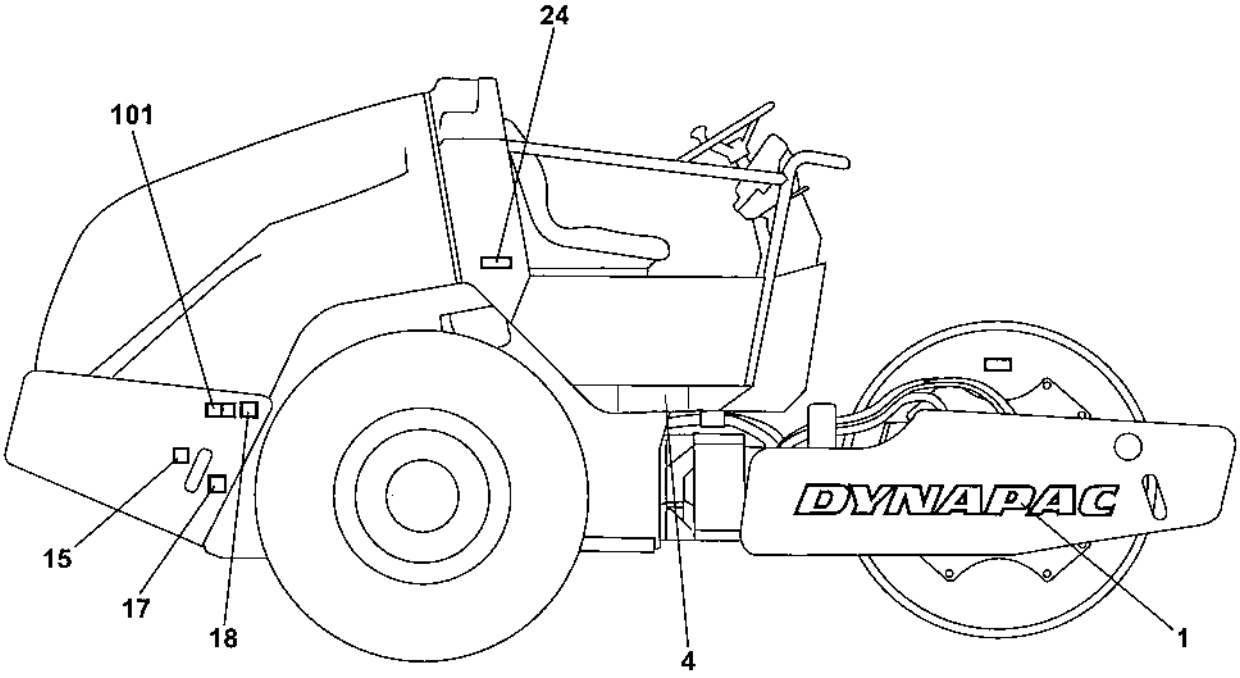

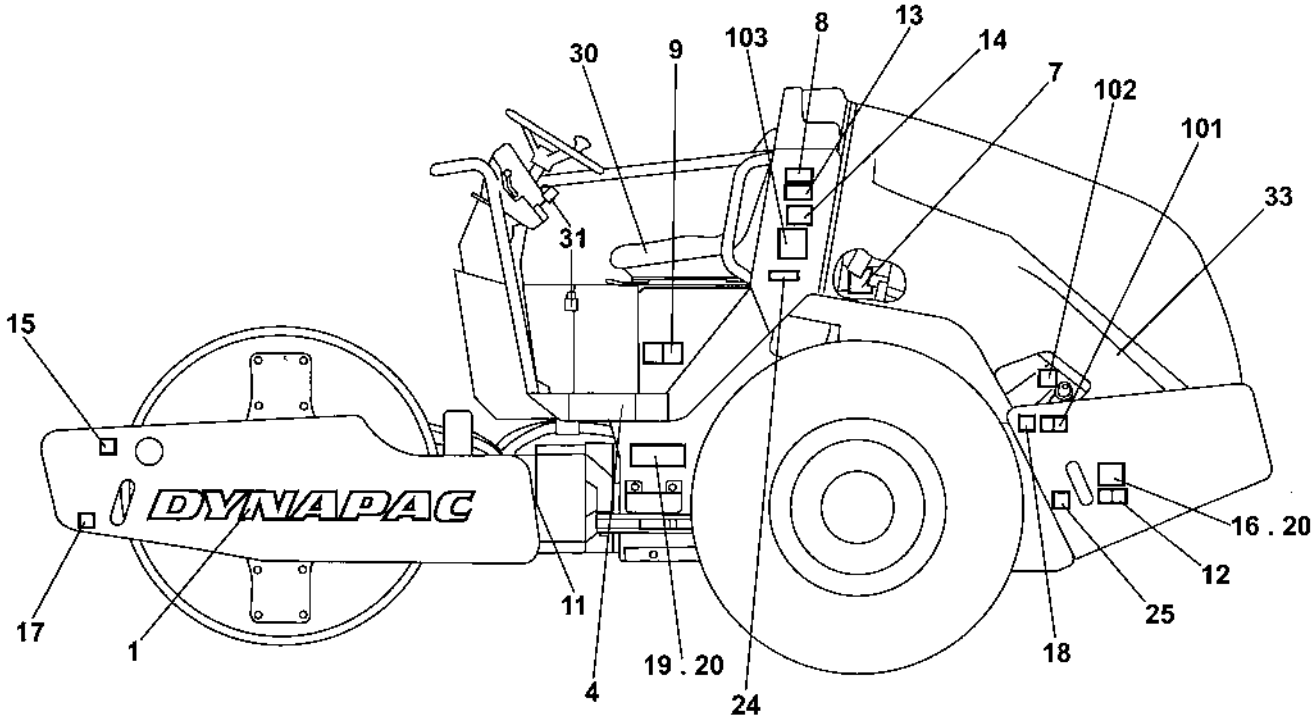

Decals

Item	Part No	Rem	Qty	Description		Code
1	4700904093		2	Decal "DYNAPAC"	L=1010 mm	
4	4700390964		2	Decal "MODEL CODE"	CA144	
7	4700991658		1	Decal "FUEL"		
8	4700903423		1	Decal "SAFETY"		
9	4700903459		1	Decal "SAFETY"		
11	4700903422		2	Decal "SAFETY"		
12	4700908229		1	Safety decal		
13	4700903424		1	Decal "HOT SURFACE"		
14	4700904835		1	Decal "BATTERY POWER"		
15	4700357587		2	Decal "LIFT POINT"		
16	4700904870		1	Lifting sign		
17	4700382751		2	Decal "TIE DOWN POINT"		
18	4700355983		2	Decal "TYRE PRESSURE"	200kPa/29psi	
19	4700960787		1	Product identif. decal "Dynapac"		
20	4700624005		8	Blind rivet	3,2x6,1	
24	4700377744		2	Reflector, yellow		B
25	4700272373		1	Decal "HYDRAULIC OIL"		
30	4700348331		1	Seat cover		D
31	4700358881		2	Pad lock		
33	4700791642	A	1	Decal "WARNING"	Use of starting fluid prohib.	
101	4700903985		2	Decal "SAFETY", "TYRE IN BALLAST"		
102	4700904601		1	Decal "BIO HYDRAULIC OIL"		
103	4700791273		1	Decal "Sound power level"	103 dB	

A) Mounted on Air filter.

Decals

18637

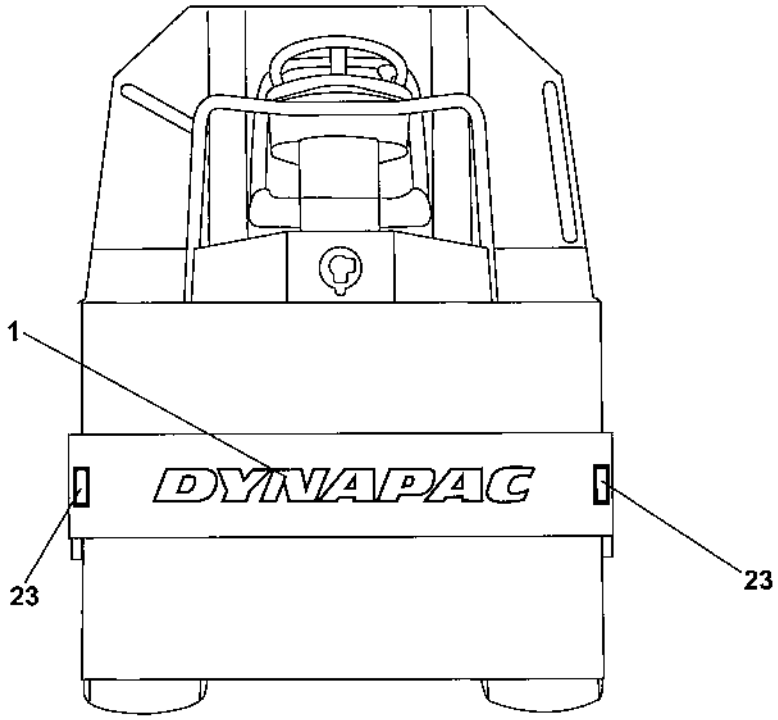

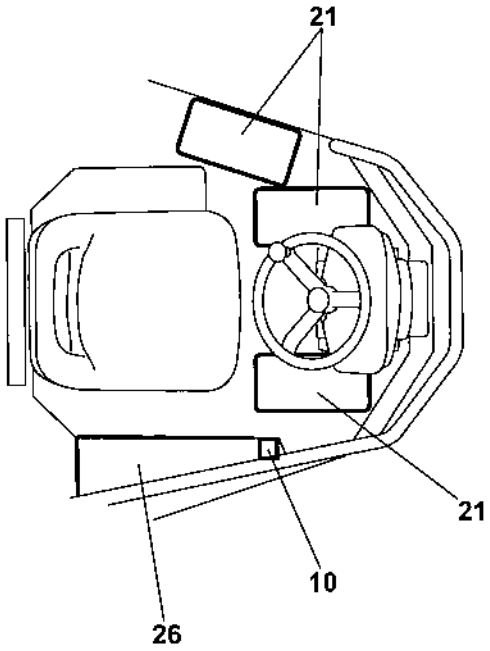

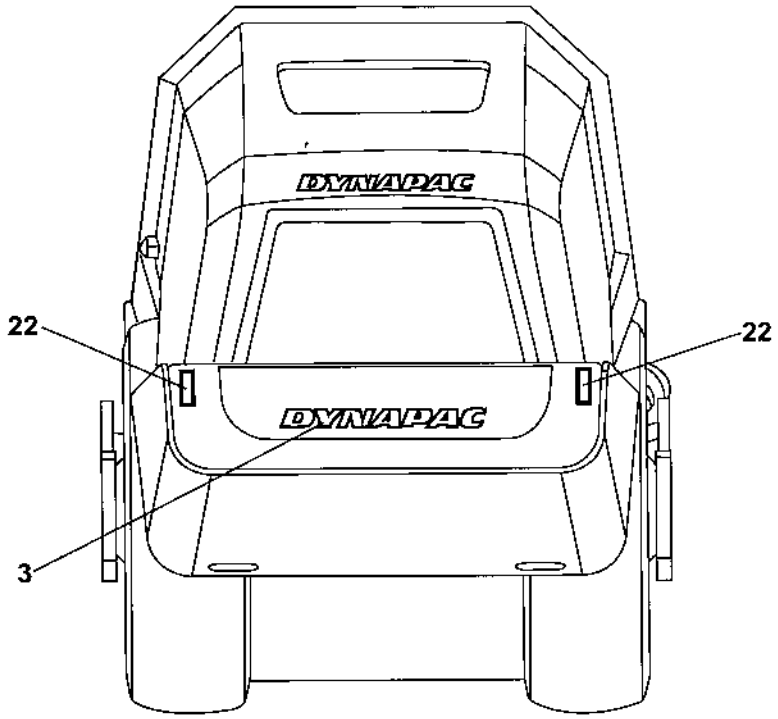

Decals

Item	Part No	Rem	Qty	Description		Code
1	4700904093		1	Decal "DYNAPAC"	L=1010 mm	
3	4700904096		1	Decal "DYNAPAC"	L=420 mm	
10	4700903425		1	Decal "SAFETY MANUAL"		
21	4700373363		3	Slip protection		
22	4700377742		2	Reflector, red		B
23	4700377743		2	Reflector, white		B
26	4700379027		1	Brake release emergency kit		
	4700358224		1	.Washer	85x17x10 FZB	
	4700904232		1	.Washer		
	4700570008		1	.Nut	M16 -8	
	4700792249		1	.Screw	M16x180H 8.8 FZB	

Standard equipment

Item	Part No	Rem	Qty	Description	Code
10				Standard equipment (Page 132)	

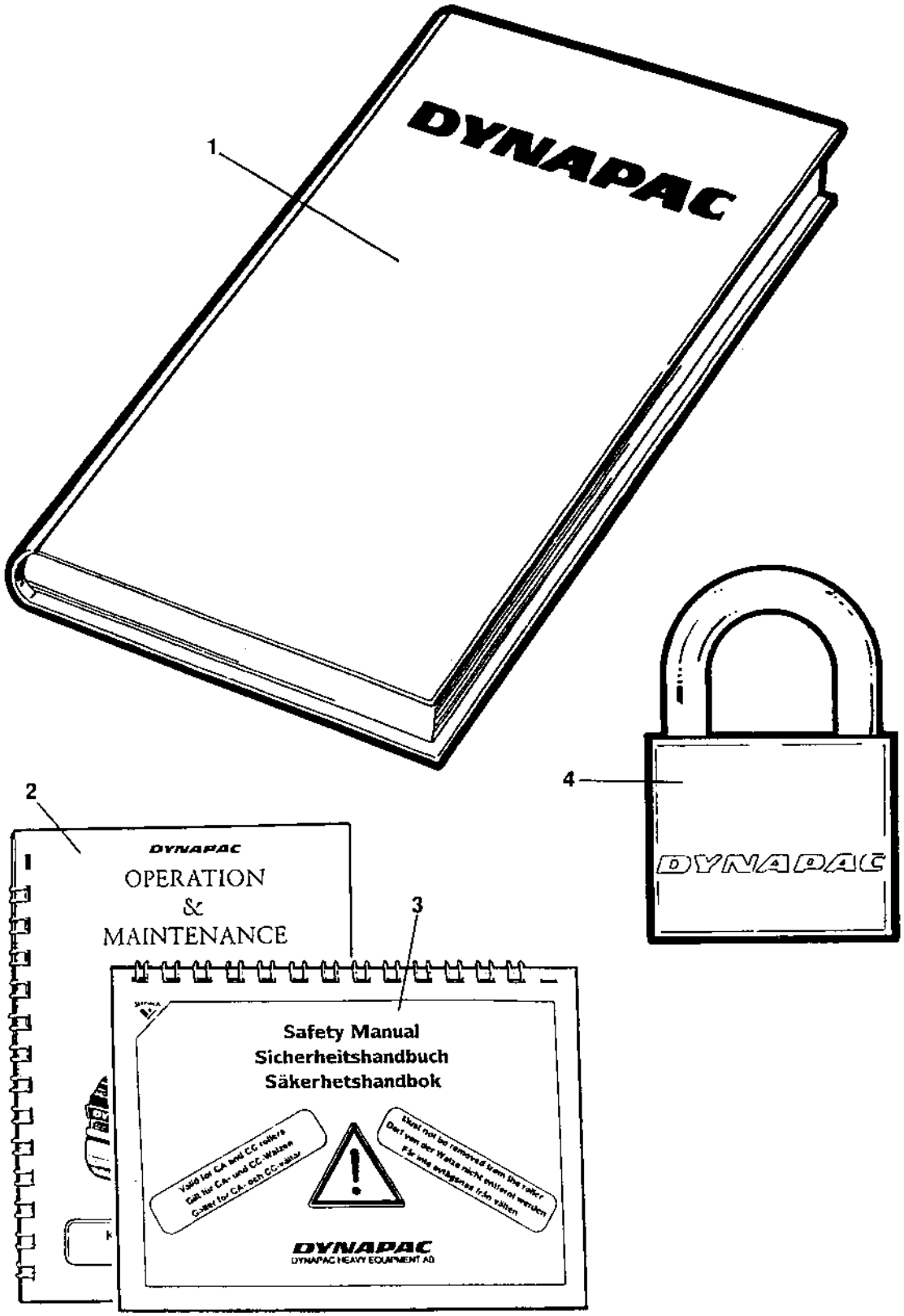
1
DYNAPAC
2
DYNAPAC
OPERATION
&
MAINTENANCE
3
Safety Manual
Sicherheitshandbuch
Säkerhetshandbok
DYNAPAC
DYNAPAC HEAVY EQUIPMENT AB
4
DYNAPAC

Standard equipment

Item	Part No	Rem	Qty	Description	Code
1			1	Documentation	ISCA144D
			1	.Warranty registration card	
			1	.Spare parts catalogue	SCA144D
			1	.Instruction manual	John Deere 5030HF285 Tier3
2			1	.Operation / maintenance instruction	ICA144
3			1	.Safety manual	RSAFE
4	4700358881		1	Pad lock	

Optional equipment

Item	Part No	Rem	Qty	Description	Code
40				Levelling blade, metal parts (Page 136)	
50				Levelling blade, hydraulic parts (Page 138)	

Levelling blade, metal parts

18642

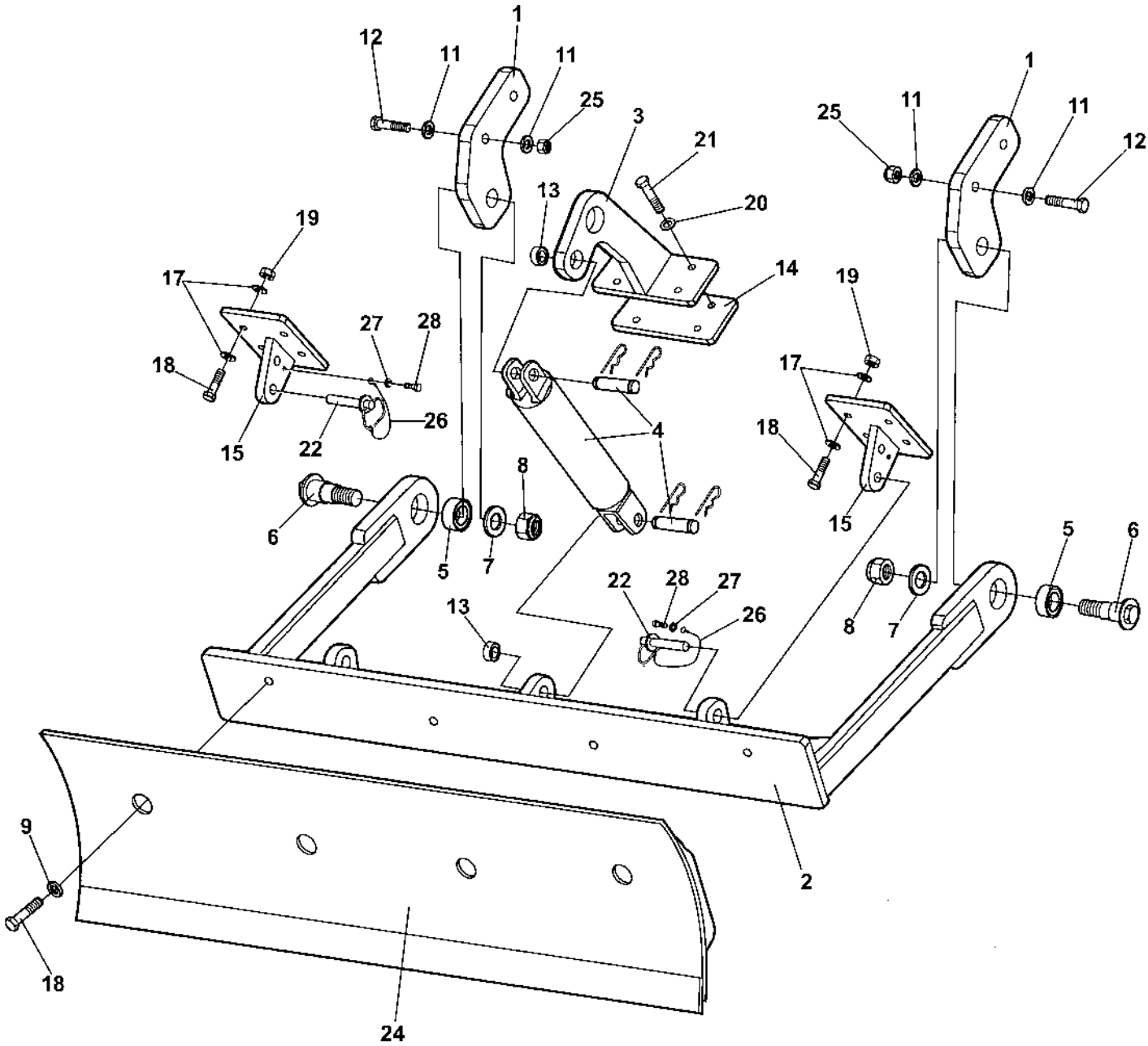

Levelling blade, metal parts

Item	Part No	Rem	Qty	Description	Code
1	4700390281		2	Bearing bracket	
2	4700392946		1	Levelling blade beam	
3	4700390282		1	Bracket	
4	4700378187		1	Steering cylinder (Page 90)	
5	4700388174		2	Bearing	
6	4700379371		2	Bolt treaded	
7	4700926074		2	Washer	31x58x8
8	4700925647		2	Lock nut	
9	4700904740		4	Washer	
11	4700904233		8	Washer	21x36x3
12	4700500208		4	Screw	M20x80
13	4700379069		2	Bearing	
14	4700390283		1	Plate	
15	4700394375		1	Locking device	
17	4700904232		8	Washer	
18	4700500070		8	Screw	M16x50
19	4700570008		4	Nut	M16 -8
20	4700904231		4	Washer	13x24x2 300 HV
21	4700500195		4	Screw	
22	4700635019		1	Lock pin	
24	4700392950		1	Levelling blade	
25	4700586022		4	Lock nut	M20-8
26	4700343775		2	Wire	
27	4700904230		2	Washer	
28	4700500043		2	Screw	M10x16H 8,8

Levelling blade, hydraulic parts

18643-1

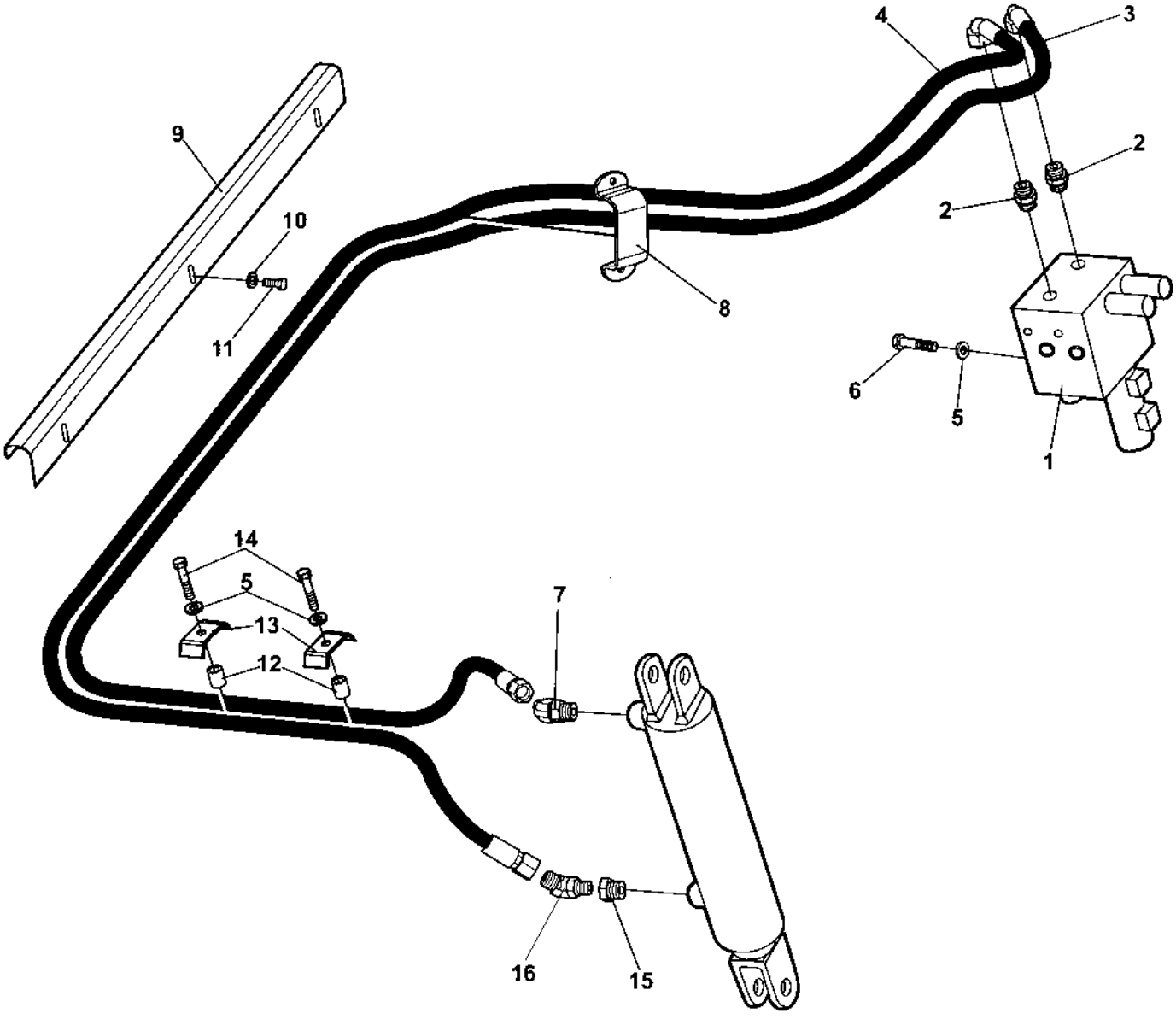

Levelling blade, hydraulic parts

Item	Part No	Rem	Qty	Description	Code
1	4700379133		1	Valve (Page 140)	
2	4700791634		2	Adapter	
3	4700483931		1	Hose	
4	4700483932		1	Hose	
5	4700904229		4	Washer	8,4x16x1,5
6	4700500024		2	Screw	M8x45
7	4700792436		2	Elbow 45	
8	4700392053		1	Holder	
9	4700392054		1	Hose guard	
10	4700904639		3	Washer	6,7x14x1,5
11	4700500013		3	Screw	M6-1x16 8,8
12	4700356273		2	Spacer sleeve	
13	4700346230		2	Clamp	
14	4700500047		2	Screw	
15	4700395101		1	Connector	
16	4700792658		1	Elbow 45	

4700379133 Valve

18926

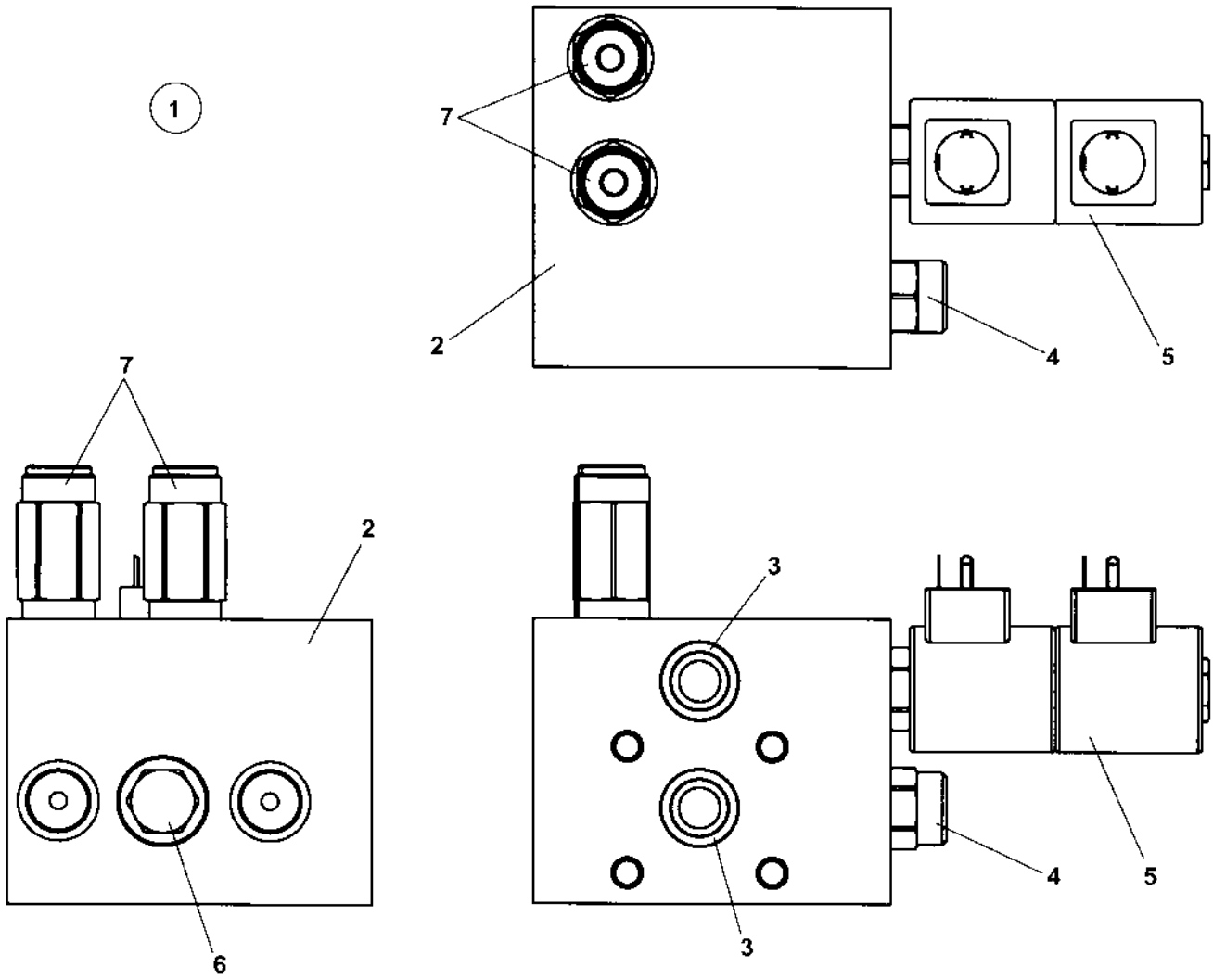

4700379133 Valve

Item	Part No	Rem	Qty	Description	Code
1	4700379133		1	Valve (Page 140)	
2			1	.Valve block	
3	4812155464		1	.O-ring	
4	4812155465		1	.Priority valve	
5	4812155466		1	.Solenoid valve, cpl	
	4700945291		2	..Coil	
6	4812155467		1	.Pilot check valve	
7	4812155468		2	.Pressure relief valve	

NUMERICAL INDEX

Part Number	Page	Part Number	Page	Part Number	Page
349888003	61	4700357587	127	4700378574	49
4700114089	21,39	4700357855	115	4700378585	49
4700116041	23,39	4700358224	129	4700378588	49
4700135007	19,31	4700358881	127,133	4700378589	49
4700160040	21,39	4700359550	87	4700378617	81
4700160093	21,39	4700359551	87	4700378621	81,85
4700160132	19,31	4700359552	87	4700378622	43
4700160279	81	4700370231	39	4700378627	115
4700160344	21,39	4700371728	45,111	4700378628	115
4700162008	67	4700372229	9,13,87	4700378640	43
4700162017	39	4700372664	101	4700378641	43
4700162018	39	4700372964	115	4700378642	43
4700162027	39	4700373363	129	4700378644	51
4700167016	19	4700373476	35	4700378657	47
4700167018	19,31	4700374029	111	4700378658	47
4700194045	79	4700374030	111	4700378664	43
4700194064	79	4700374059	67	4700378668	81
4700202043	81	4700374120	111	4700378669	81
4700212386	77	4700374565	39	4700378675	109
4700232039	81	4700374744	29	4700378676	111
4700232145	81,87	4700377009	121	4700378677	111
4700232210	39	4700377010	121	4700378681	111
4700238158	105,107	4700377011	121	4700378712	47
4700272373	127	4700377012	121	4700378733	47
4700287294	87	4700377014	121	4700378734	47
4700288129	45	4700377015	121	4700378735	13,47
4700300016	19,31	4700377016	121	4700378736	11,13,47
4700313001	49	4700377018	121	4700378745	101
4700313006	45	4700377019	119	4700378759	121
4700313008	81	4700377020	119	4700378761	19,31
4700313010	45	4700377021	119	4700378762	19,31
4700313023	49	4700377024	119	4700378765	19,31
4700313032	49	4700377255	117	4700378767	19,31
4700313036	51	4700377556	115	4700378774	109
4700313038	49	4700377677	123	4700378829	123
4700313041	101,109	4700377742	129	4700378878	29
4700313075	45	4700377743	129	4700378879	29
4700313108	45	4700377744	127	4700378880	29
4700330171	49	4700377785	31	4700378926	47
4700336742	25,39	4700377786	31	4700378928	115
4700340862	85	4700378003	39	4700378957	49
4700343318	39	4700378125	29	4700378959	33
4700343550	107	4700378143	67,79	4700378980	109
4700343744	39	4700378149	81,83	4700379027	129
4700343748	111	4700378153	87,89	4700379057	67,81
4700343775	29,137	4700378154	45	4700379067	111
4700343801	39	4700378155	81	4700379069	87,137
4700344196	39	4700378164	67,69	4700379133	139,141
4700345243	67	4700378165	57	4700379184	51
4700345666	115	4700378166	67,77	4700379206	111
4700346230	139	4700378187	87,91,137	4700379371	137
4700347119	29	4700378294	51	4700379434	93
4700348331	127	4700378298	49	4700379464	49
4700349715	39	4700378302	95,97	4700379467	119
4700355797	111	4700378335	115	4700379636	115
4700355869	115	4700378340	119	4700379637	123
4700355983	127	4700378409	43	4700379666	29
4700356273	139	4700378433	33	4700381027	39
4700357138	13,81	4700378445	81	4700381028	39
4700357139	81	4700378475	115	4700381413	45
4700357459	49	4700378488	39	4700382130	33
4700357488	29	4700378537	93	4700382131	33

NUMERICAL INDEX

Part Number	Page	Part Number	Page	Part Number	Page
4700382165	33	4700390523	39	4700394196	35
4700382335	33	4700390549	39	4700394197	35
4700382751	127	4700390550	39	4700394198	35
4700383436	39	4700390551	39	4700394199	35
4700384163	111	4700390592	43	4700394253	49
4700384397	39	4700390593	43	4700394375	137
4700384584	117	4700390594	43	4700394478	43
4700385133	39	4700390662	55	4700394479	43
4700385599	105,107	4700390663	55	4700394480	45
4700386272	23,39	4700390664	55	4700394481	45
4700386966	47	4700390665	55	4700394484	47
4700387129	43	4700390666	55	4700394492	47
4700387130	45	4700390667	55	4700394493	47
4700387148	33	4700390668	55	4700394494	45
4700387151	33	4700390669	55	4700394495	47
4700387226	115	4700390670	55	4700394496	45
4700387227	115	4700390671	55	4700394657	101
4700387545	115	4700390672	55	4700394734	105
4700387682	49	4700390964	127	4700394983	115
4700387683	105,107	4700391265	29	4700395101	139
4700387720	115	4700391379	121	4700395323	47
4700387722	101	4700391380	121	4700395394	105,107
4700387948	33	4700391381	121	4700395690	45
4700388173	19,31	4700391382	121	4700395704	45
4700388174	137	4700391383	121	4700395862	47
4700388447	115	4700391386	121	4700395863	47
4700388465	111	4700391440	67,81	4700395939	51
4700389166	49	4700391784	115	4700396091	47
4700389577	109	4700392013	45	4700396927	107
4700389662	101	4700392053	139	4700416034	119
4700390140	115	4700392054	139	4700483722	87
4700390244	45	4700392119	45	4700483826	67
4700390245	45	4700392161	47	4700483832	95
4700390248	115	4700392165	101	4700483835	93
4700390249	117	4700392552	67	4700483836	93
4700390251	45	4700392765	19,31	4700483837	93
4700390255	33	4700392915	111	4700483839	81
4700390259	33,35	4700392946	137	4700483842	67
4700390269	33	4700392950	137	4700483843	87
4700390270	33	4700393087	19,31	4700483844	87
4700390281	137	4700393126	45	4700483845	87
4700390282	137	4700393436	31	4700483846	87
4700390283	137	4700393438	31	4700483847	93
4700390298	33	4700393561	19,31	4700483848	93
4700390299	33	4700393562	19,31	4700483849	87
4700390341	51	4700393599	31	4700483850	67,81
4700390351	39	4700393601	103	4700483871	67
4700390357	39	4700393602	103	4700483872	87
4700390366	115	4700393969	31	4700483915	67
4700390367	115	4700394061	105,107	4700483917	81
4700390383	45	4700394176	35	4700483918	81
4700390389	49	4700394181	35	4700483928	81
4700390390	45	4700394184	35	4700483931	139
4700390391	45	4700394185	35	4700483932	139
4700390392	45	4700394186	35	4700483944	67
4700390393	45	4700394187	35	4700483945	95
4700390394	101	4700394188	35	4700483946	67
4700390420	29	4700394189	35	4700483983	67
4700390425	29	4700394190	35	4700483984	95
4700390475	33	4700394191	35	4700483986	95
4700390521	39	4700394192	35	4700484008	67
4700390522	39	4700394195	35	4700500006	101,103

NUMERICAL INDEX

Part Number	Page	Part Number	Page	Part Number	Page
4700500007	115	4700516002	33	4700791647	105
4700500012	31,33	4700516049	33	4700791719	101
4700500013	29,45,101,109	4700527002	39	4700791723	107
	111,115,139	4700535011	33	4700791733	107
4700500015	47	4700541534	101	4700791739	107
4700500019	33,45,111	4700541702	109	4700791791	87
4700500020	67	4700570004	33,47,105,107	4700791798	67,87
4700500021	33,45,49,93		109,121	4700791799	67
4700500022	43,45,81,87,111	4700570005	33,45,47,49,67	4700791808	67
	119		81,93,95,101,109	4700791820	43
4700500023	45		119	4700791823	67,81
4700500024	81,139	4700570006	33,45	4700791830	43
4700500028	39,45,81,101	4700570008	129,137	4700791832	95
4700500029	31,33,43,49,115	4700573008	33	4700791836	81,87
4700500030	67	4700586001	33,101,103,111	4700791840	87
4700500031	67,115		119	4700791841	67,87
4700500032	45	4700586002	49,101,105,107	4700791844	67
4700500037	39,43,67		111,115	4700791850	67
4700500040	35,45,93,101,115	4700586003	33,45,47,101,115	4700791853	81,95
4700500043	29,81,137		119	4700791857	95
4700500046	39,81	4700586018	109	4700791862	87
4700500047	33,47,139	4700586019	29,33,43,121	4700791914	93
4700500048	29,67,87,115	4700586021	39	4700791933	39
4700500051	39	4700586022	137	4700791954	111
4700500053	47,51,81,101,105	4700600016	91	4700791955	111
	107,109,111	4700624005	127	4700791980	109
4700500058	39	4700635019	137	4700791981	109
4700500060	101	4700635061	29,91	4700792035	111
4700500061	111	4700747282	49	4700792083	105,107
4700500067	87	4700791120	81	4700792134	101
4700500068	33	4700791182	43	4700792151	87
4700500070	39,43,137	4700791183	101	4700792157	67
4700500075	43,49,101,105	4700791185	105,107	4700792167	81
	107	4700791211	105,107	4700792168	81
4700500076	39	4700791233	35	4700792195	101
4700500082	123	4700791234	35	4700792196	101
4700500109	67	4700791273	127	4700792198	81,87
4700500116	67	4700791318	67	4700792199	81
4700500133	29,39	4700791321	87	4700792203	105,107
4700500134	29	4700791341	109,111	4700792219	87
4700500163	39	4700791414	93	4700792240	103,105,107
4700500165	29,39	4700791423	45	4700792249	129
4700500170	95	4700791476	115	4700792257	33
4700500194	43	4700791477	101	4700792258	33
4700500195	137	4700791514	101	4700792261	55
4700500197	81	4700791517	105	4700792264	67
4700500199	115	4700791536	93	4700792282	101
4700500208	137	4700791537	93	4700792283	101
4700500226	55	4700791538	93	4700792295	31
4700500267	33	4700791542	93	4700792315	105,107
4700500505	115	4700791549	67	4700792319	105,107
4700502036	95	4700791578	105,107	4700792320	105,107
4700503010	111	4700791582	105,107	4700792413	105,107
4700508020	119	4700791583	105,107	4700792425	95
4700508027	45	4700791584	105,107	4700792426	95
4700508048	81	4700791585	105,107	4700792432	105,107
4700508068	121	4700791587	105,107	4700792435	105,107
4700508092	119	4700791588	105,107	4700792436	139
4700509012	43	4700791594	109	4700792510	19,31
4700509035	67	4700791632	81,95	4700792511	19,31
4700513017	115	4700791634	43,139	4700792658	139
4700513027	117	4700791642	127	4700792679	105,107

NUMERICAL INDEX

Part Number	Page	Part Number	Page	Part Number	Page
4700801981	47	4700904038	101	4700909469	69,73
4700813429	81	4700904066	79	4700909514	73
4700814261	51	4700904093	127,129	4700909586	59
4700821460	39	4700904096	129	4700909630	57
4700900775	39	4700904137	49	4700921022	81
4700900790	111	4700904214	67	4700921028	101
4700900926	57	4700904228	29,31,33,43,45	4700921039	109
4700900986	123		49,93,101,105	4700921072	45,111
4700901145	55		107,109,111,115	4700921099	45
4700901157	67,81	4700904229	33,43,45,47,49	4700922552	81
4700901225	105,107		51,67,81,87,93	4700923270	117
4700901227	105,107		95,101,105,107	4700923405	87
4700901228	105,107		109,111,115,119	4700925629	33
4700901750	71		139	4700925647	137
4700901767	105,107,111	4700904230	29,31,33,39,45	4700925802	45
4700902064	111		81,87,109,115	4700926074	137
4700902066	111		137	4700926537	111,119
4700902123	115	4700904231	29,33,39,43,81	4700926732	59
4700902166	115,123		137	4700926736	21,39
4700902295	81	4700904232	39,43,123,129	4700926810	59
4700902379	33,115		137	4700926845	61
4700902407	79	4700904233	55,137	4700927233	121
4700902624	69	4700904281	33,101,103,111	4700927278	69,73
4700902625	73		115	4700927974	49
4700902638	69	4700904294	101	4700928381	35
4700902641	75	4700904313	111	4700928502	111
4700902687	69	4700904315	111	4700928830	115
4700902695	69	4700904316	111	4700929226	67
4700902763	75	4700904346	49	4700929447	23,39
4700902767	75	4700904352	45,47	4700929455	111
4700902770	75	4700904448	101	4700929648	57
4700902771	75	4700904556	49,101,119	4700929712	57
4700902773	75	4700904557	33,49,67,81,101	4700935158	69
4700902799	79		115	4700935164	71
4700902811	73	4700904558	115	4700935170	71
4700902856	69	4700904563	43,121	4700935177	73
4700903236	49	4700904574	33	4700935190	75
4700903422	127	4700904578	67	4700935192	69
4700903423	127	4700904584	81,95	4700935196	75
4700903424	127	4700904601	127	4700935197	75
4700903425	129	4700904637	43,67,95	4700935202	75
4700903431	85	4700904639	47,139	4700935203	75
4700903456	87	4700904640	33,45,47,111	4700935204	75
4700903459	127	4700904641	67,95	4700935205	75
4700903489	77	4700904653	115	4700935206	75
4700903640	101	4700904698	49	4700935207	75
4700903641	101	4700904703	29,43,67,81	4700935208	75
4700903703	45	4700904740	137	4700935209	75
4700903714	45	4700904755	117	4700935210	75
4700903741	105,107	4700904766	67,95	4700935211	75
4700903768	101	4700904773	67	4700935212	73,75
4700903782	105,107	4700904774	81,87	4700935214	75
4700903856	33	4700904793	39,115	4700935218	75
4700903907	115	4700904835	127	4700935219	69
4700903923	33	4700904855	117	4700935429	89
4700903945	121	4700904870	127	4700935613	115
4700903946	121	4700904911	101	4700935614	115
4700903947	121	4700904984	49	4700936020	63
4700903956	103,105,107	4700904989	105,107	4700936087	61
4700903985	55,127	4700908136	45	4700936103	61
4700904032	101	4700908229	127	4700936260	79
4700904036	101	4700908375	73	4700936300	69

NUMERICAL INDEX

Part Number	Page	Part Number	Page	Part Number	Page
4700936308	69	4700938987	61	4700950631	77
4700936313	73	4700939009	59	4700950632	77
4700936392	73	4700939011	63	4700950633	77
4700936411	75	4700939012	63	4700950634	77
4700936415	75	4700939013	63	4700960787	127
4700936421	75	4700939015	63	4700985013	111
4700936433	79	4700939167	69	4700985014	111
4700936434	79	4700939173	69	4700991658	127
4700936435	79	4700939219	79	4700999027	105,107
4700936437	79	4700939270	63	4812110216	109
4700936438	79	4700939282	61	4812155075	115
4700936439	79	4700939350	63	4812155463	61
4700936440	79	4700939384	63	4812155464	141
4700936441	79	4700939385	63	4812155465	141
4700936442	79	4700939394	91	4812155466	141
4700936443	79	4700939397	91	4812155467	141
4700936445	79	4700939398	91	4812155468	141
4700936447	79	4700940369	79		
4700936451	79	4700940374	121		
4700936452	79	4700940451	105,107		
4700936453	79	4700940985	9,11,13,43		
4700936454	79	4700940988	43		
4700936455	79	4700940989	43		
4700936456	79	4700945161	91		
4700936472	79	4700945162	91		
4700936473	79	4700945163	91		
4700936474	79	4700945291	83,141		
4700936475	79	4700945311	75		
4700936477	79	4700945407	121		
4700936478	79	4700945729	121		
4700936479	79	4700945753	49		
4700936480	79	4700945836	75		
4700936482	79	4700950153	15,17,21		
4700936484	79	4700950154	15,17,23		
4700936485	79	4700950156	15,17,19		
4700936621	71	4700950305	43		
4700936673	73	4700950306	9,11,13,43		
4700936803	69	4700950404	5,7,9		
4700936855	73	4700950405	5,7,11		
4700937174	71	4700950406	5,7,13		
4700937175	71	4700950462	61		
4700937182	71	4700950463	61		
4700937186	71	4700950464	61		
4700937198	69	4700950465	61		
4700937199	69	4700950466	61		
4700937200	69	4700950514	61		
4700937201	69	4700950515	61		
4700937206	73	4700950556	57		
4700937259	77	4700950577	69,75		
4700937531	69	4700950578	69,71		
4700937900	85	4700950579	69,73		
4700937987	73	4700950581	97		
4700937990	73	4700950582	97		
4700938001	69	4700950583	97		
4700938003	69	4700950584	69		
4700938004	69	4700950609	97		
4700938005	69	4700950610	97		
4700938014	69	4700950626	77		
4700938249	75	4700950627	77		
4700938499	79	4700950628	77		
4700938875	15,17,25	4700950629	77		
4700938986	61	4700950630	77		