DYNAPAC
Part of the Atlas Copco Group

Spare Parts Catalogue

SCA150PD-US4EN1

Valid from roller serial number:
***10000104**x0D000001 -*

Diesel engines:
Cummins QSB 3.3

Published catalogue issues valid for these rollers:

Catalogue	*Issue date*	*Valid for serial numbers*
SCA150PD-US4EN1	*2010-09*	***10000104**x0D000001 -*

We reserve the right to change specifications without notice.
Printed in Sweden.

DYNAPAC
Part of the Atlas Copco Group

RESERVDELSBESTÄLLNING

Följande uppgifter ska lämnas vid beställning av reservdelar för att undvika leveransfel:

1. Maskintyp.
2. Vältens serienummer.
3. Antal av önskad reservdel.
4. Reserdelens artikelnummer.
5. Reservdelens benämning.
6. Måttuppgifter vid beställning av metervara.

ORDERING SPARE PARTS

To avoid errors in delivery, please give the following information when ordering spare parts:

1. Type of machine.
2. Roller serial number.
3. Quantity required.
4. Part number.
5. Parts denomination.
6. Dimensions when ordering per length.

ERSATZTEILBESTELLUNG

Zur Vermeidung von Fehllieferungen sind bei der Bestellung von Ersatzteilen folgende Angaben zu machen:

1. Maschinentyp.
2. Herstellungsnummer.
3. Bestellmenge. (Quantity)
4. Ersatzteilnummer. (Part Nº)
5. Ersatzteilbenennung. (Denomination)
6. Massangaben bei Bestellung von Meterware.

ORDINI DI RICAMBI

Per evitare errori nelle consegne di ricambi, Vi preghiamo di comunicarci le seguenti informazioni al momento dell 'ordinazione:

1. Tipo di macchina.
2. Numero di serie della macchina.
3. Quantità dei pezzi desiderati. (Quantity)
4. Numero di codice del pezzo. (Part Nº)
5. Descrizione del pezzo di ricambio. (Denomination)
6. Misura, in caso di ordine per metro.

PEDIDO DE RECAMBIOS

Para evitar errores en las entregas, deberán indicarse los siguientes datos al hacer un pedido de recambios:

1. Tipo de máquina.
2. Número de serie.
3. Cantidad de piezas deseadas. (Quantity)
4. Número de artículo de la pieza de recambio. (Part Nº)
5. Denominación de la pieza. (Denomination)
6. Indíquese la medida al solicitar un artículo que se expide por metros.

COMMANDE DE PIECES DE RECHANGE

Les indications suivantes doivent être fournies lors de la commande de piéces de rechange, afin d'éviter toute erreur de livraison:

1. Type de machine.
2. Numéro de série.
3. Quantité désirée de pièce de rechange. (Quantity)
4. Numéro de la piéce de rechange. (Part Nº)
5. Dénomination de la piéce de rechange. (Denomination)
6. Longueur en cas de commande au mètre.

YOUR AGENT/DEALER:

Text pages

The text pages is structured as the picture on the right.

1. This is the remarks for specific items and the descriptions of the remarks is at the bottom of the parts list.

2. Parts indicated by a dot and moved to the right are included when buying the assembled unit above.

3. Spare parts and service code for a specific part, mainly for internal use at Dynapac. "A" = Service part, "B" = Fast moving part, "C" = Suggested exchanged part and "D" = Regular spare part.

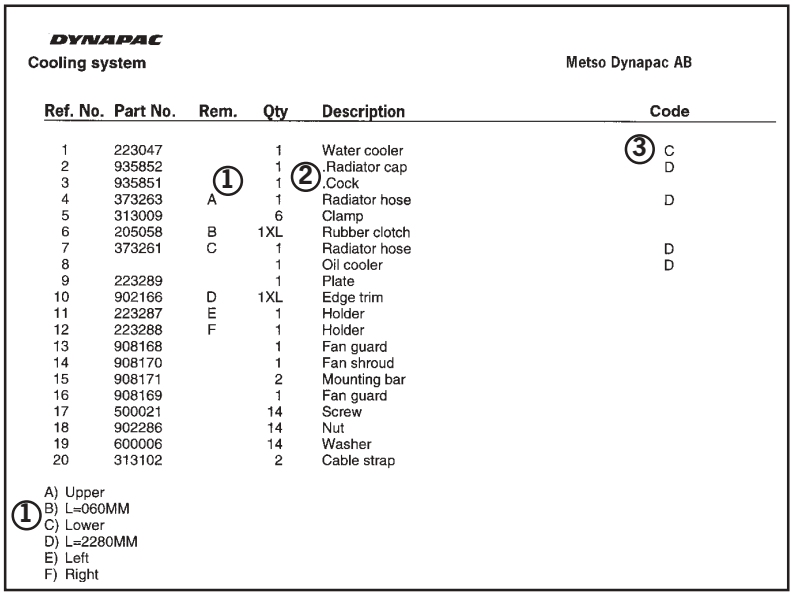

DYNAPAC

Cooling system — Metso Dynapac AB

Ref. No.	Part No.	Rem.	Qty	Description	Code
1	223047		1	Water cooler	③ C
2	935852		1	.Radiator cap	D
3	935851	①	1	②.Cock	
4	373263	A	1	Radiator hose	D
5	313009		6	Clamp	
6	205058	B	1XL	Rubber clotch	
7	373261	C	1	Radiator hose	D
8			1	Oil cooler	D
9	223289		1	Plate	
10	902166	D	1XL	Edge trim	
11	223287	E	1	Holder	
12	223288	F	1	Holder	
13	908168		1	Fan guard	
14	908170		1	Fan shroud	
15	908171		2	Mounting bar	
16	908169		1	Fan guard	
17	500021		14	Screw	
18	902286		14	Nut	
19	600006		14	Washer	
20	313102		2	Cable strap	

① A) Upper
B) L=060MM
C) Lower
D) L=2280MM
E) Left
F) Right

Changes

PARTS INFO	SERVICE INFO	GROUP	PAGE	NOTES

Notes

Notes

DYNAPAC

PÄRMETIKETT

För att undvika fel vid reservdelsbeställning finns här nedan två etiketter som passar i fickorna på pärmarnas ryggar. På dessa kan man se från vilket vältnummer av aktuell maskin reservdelskatalogen gäller. Gör så här:

1. Tag denna sida ur pärmen.
2. Klipp ut etiketten till **VÄNSTER** (1) och sätt in den i fickan på **DENNA** pärmens rygg.
3. Finns det en etikett till **HÖGER** (2), kan denna användas på pärmen för **FÖREGÅENDE** utgåva av denna katalog.
4. Kasta detta papper.

BINDER LABEL

To avoid errors when ordering spare parts use the labels below to identify the catalogues on the back of the binder. The label contain the serial number range for which the catalogue is valid. Do like this:

1. Remove this page from the binder.
2. Cut out the **LEFT** label (1) and put it on **THIS** binders back.
3. If there is a label to the **RIGHT** (2), it can be used on the binder for **PRECEDING** issue of this catalogue.
4. Throw away this paper.

KATALOG-BESCHRIFTUNG

Zur Vermeidung von Fehlen bei der Ersatzteilbestellung benutzen Sie bitte die unteren Beschriftungen, um die Kataloge auf der Rückseite zu kennzeichen. Auf der Beschriftung ist angegaben, für welche Maschinennummern der jeweilige Katalog gültig ist. Ablauf:

1. Nehmen Sie dieses Blatt aus dem Katalog.
2. Schneiden Sie die **LINKE** Beschriftung (1) aus. Schieben Sie die Beschriftung in die tasche auf **DEM** Katalogrücke.
3. Sollte die Beschriftung unten **RECHTS** (2) mitgeliefert werden, kennzeichen Sie damit bitte die **ÄLTERE** Ausführung dieses Kataloges.
4. Den Rest dieses Blattes bitte vernichten.

ETICHETTA POSTA SUL RACCOGLITORE

Per evitare errori quando ordinate pezzi di ricambio, usate le etichette in calce che servono ad identificare i cataloghi sul retro del raccoglitore. L'etichetta indica il numero di matricola delle maccine prese in considerazione nel catalogo.

1. Rimuovete questa pagina dal raccoglitore.
2. Ritagliate l'etichetta posta a **SINISTRA** (1) e ponetela sul retro **DEL** raccoglitore.
3. Se trovate anche un'etichetta sulla **DESTRA** (2), ritagliatela e ponetela sul raccoglitore relativo alla **PRECEDENTE** edizione del catalogo.
4. Distruggete questo foglio.

ETIQUETA PARA LA CARPETA

Para evitar errores al pedir repuestos utilicen las etiquetas abajo descritas para identificar los catálogos en la parte trasera de la carpeta. En la etiqueta se ven los números de referencia de la serie para la cual es válido el catálogo. Instrucciones:

1. Quitar esta página de la carpeta.
2. Corta la etiqueta **IZQUIERDA** (1) y ponerla est **ESTA** carpeta en la parte trasera.
3. Si hay una etiqueta en la parte **DERECHA** (2) se puede utilizar en la carpeta para el catálogo que **PRECEDE** a esta.
4. Tirar esta hoja.

ETIQUETAGE DU CATALOGUE

Afin d'éviter des erreurs lors de commandes de pièces de rechange, nous vous conseillons d'apposer les marquages ci-dessous à l'arrière du classeur, pour identifier les catalogues. Ce marquage indique les numéros de série pour lesquels le catalogue est adapté. Il convient de procéder de la façon suivante:

1. Retirez cette page du classeur.
2. Découpez l'étiquette de **GAUCHE** (1), et apposez-la à l'arrière de **CE** catalogue.
3. Si il y a une étiquette à **DROITE** (2), vous pourrez l'apposer sur le classeur de l'edition **PRECEDENTE** du catalogue.
4. Détruire cetta feuille.

1.

CA150PD

Catalogue **SCA150PD-US4EN1**
Valid **from** serial number:
10000104x0D000001

TABLE OF CONTENTS

Page

CA150PD SN 10000104x 0D000001 - 2

Service kits 4

Service kits 6
4700950400 Service kit 50 h 8
4700939076 Service kit 250 / 750 h 10
4700950401 Service kit 500 h 12
4700950403 Service kit 1000 h 14

Repair kits 16

4700938558 Steering hitch kit 18
4700938898 Eccentric shaft kit 20
4700938891 Drum rotation kit 22
4700938876 Shock absorber kit, drum 24

Frame 26

Frames 28
Scraper 30
Hitch 32
Structure 34

Drum 36

Drum 38

Engine 40

Engine Cummins QSB3.3 42
Cooling system 44
Combustion air system 48
Fuel system 50
Exhaust system 52

Transmission 54

Rear axle and wheels 56
4700384789 Rear axle 58
Housing 60
Differential with limited slip 62
Brakes 64
Planet gear 66

Hydraulic system 68

Propulsion system, Front 70
Propulsion system, Rear 72
4700380829 Propulsion pump 74
4700384598 Hydraulic motor 80
Vibration system 82
4700384751 Vibration pump 84
4700380144 Hydraulic motor, vibration 86
Steering system 88
Hydraulic oil tank 90
4700392002 Steering cylinder 92
4700385957 Pilot valve 94
Brake system 96
Hydraulic oil tank 90
Variable rear axle motor Option 98
4700380829 Propulsion pump 74
4700383855 Rear axle Limited Slip 100
Housing 102
Differential with limited slip 104
Brakes 106

TABLE OF CONTENTS

Page

Planet gear 108
Central test panel hydraulic Option 110
Electrical equipment 112

Electric system 114
Control panel 116
Working lights Option 118
Rotating beacon Option 120
Back-up alarm Option 122
Compaction meter Option 124
Drivers platform 126

Drivers platform 128
Control panel 130
Forward and reverse control 132
Forward and reverse control handle 134
Steering column 136
Canopy Option 138
Rops and fops 140
Cab mounting 142
Cab 392479 144
Cab Screens 146
Cab Door, left side 150
Cab Interior rear mirror 152
Wiper arm with blade, front 154
Cab Electric 156
Decals 158

Decals 160
Decals 162
Standard equipment 164

Standard equipment 166
Optional equipment 168

Tool equipment 170
Dy-Mic 172
Heater, Simple cab 174
4700379394 Heater box 176

CA150PD SN 10000104x 0D000001 - 18962

CA150PD SN 10000104x 0D000001 -

Item	Part No	Rem	Qty	Description	Code
1				Service kits (Page 4)	
2				Repair kits (Page 16)	
10				Frame (Page 26)	
20				Drum (Page 36)	
30				Engine (Page 40)	
40				Transmission (Page 54)	
50				Hydraulic system (Page 68)	
60				Electrical equipment (Page 112)	
70				Drivers platform (Page 126)	
80				Decals (Page 158)	
90				Standard equipment (Page 164)	
91				Optional equipment (Page 168)	

Service kits

Item	Part No	Rem	Qty	Description	Code
-1				Service kits (Page 6)	
1	4700950400			Service kit 50 h (Page 8)	
2	4700939076			Service kit 250 / 750 h (Page 10)	
3	4700950401			Service kit 500 h (Page 12)	
4	4700950403			Service kit 1000 h (Page 14)	

Service kits

Item	Part No	Rem	Qty	Description	Code
1	4700950400			Service kit 50 h (Page 8)	
2	4700939076			Service kit 250 / 750 h (Page 10)	
3	4700950401			Service kit 500 h (Page 12)	
4	4700950403			Service kit 1000 h (Page 14)	

4700950400 Service kit 50 h

CA150140

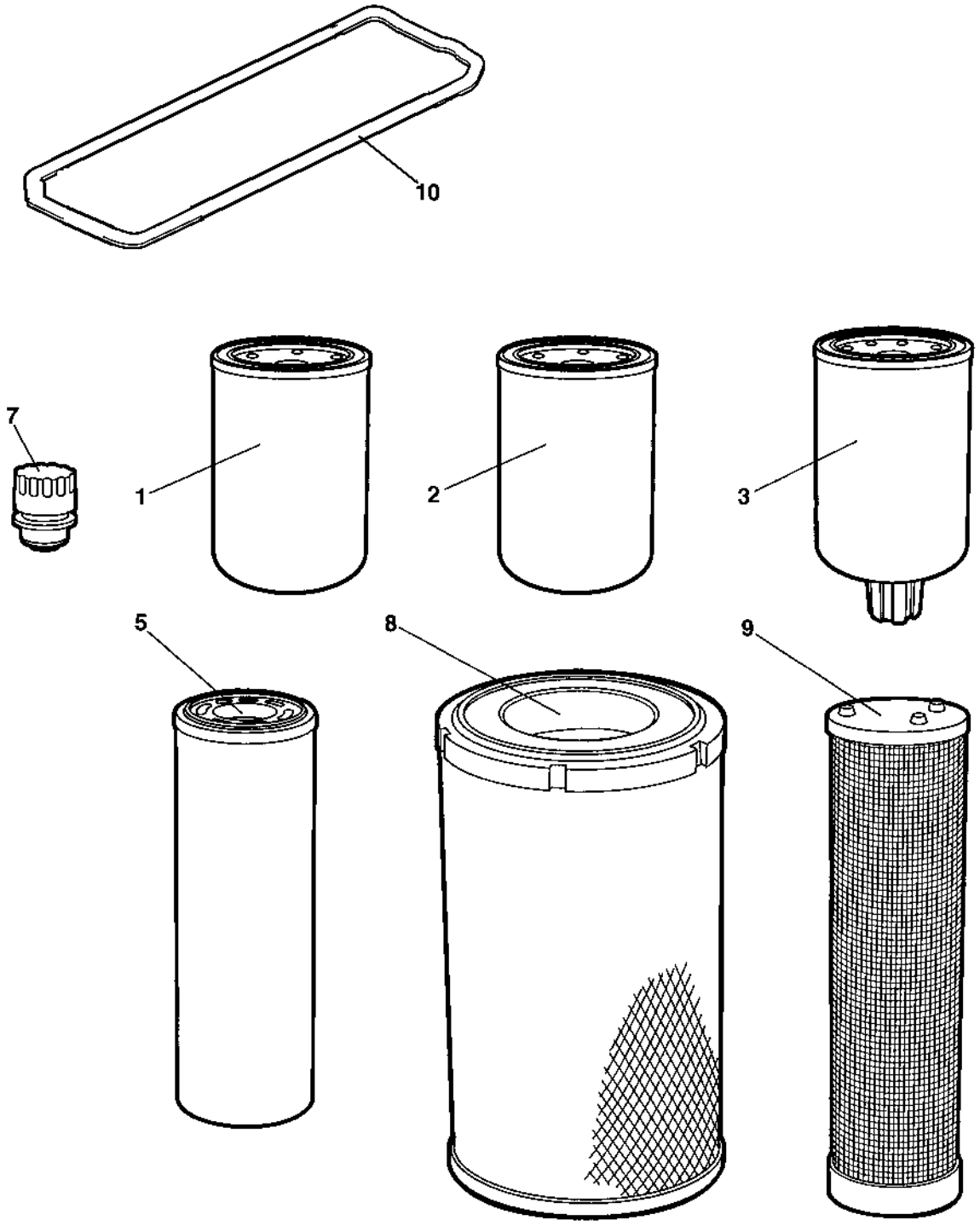

4700950400 Service kit 50 h

Item	Part No	Rem	Qty	Description	Code
	4700950400			Service kit 50 h (Page 8)	
1	4700939068		1	Oil filter element	A
2	4700950302		1	Fuel filter element	A
3	4700950301		1	Pre-fuel filter element	A
5	4700372229		1	Hydraulic oil filter element	A

4700939076 Service kit 250 / 750 h

18818

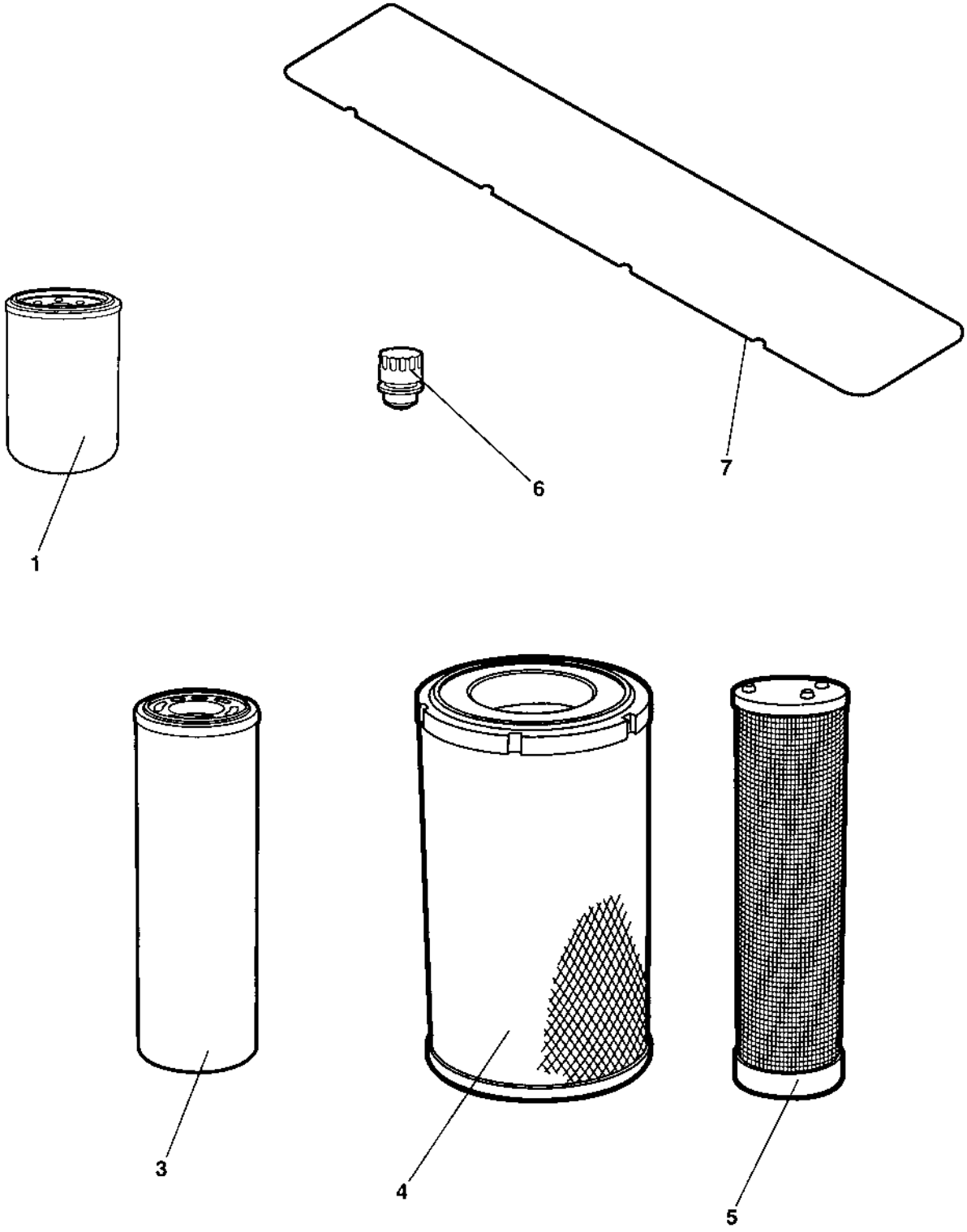

4700939076 Service kit 250 / 750 h

Item	Part No	Rem	Qty	Description	Code
	4700939076			Service kit 250 / 750 h (Page 10)	
1	4700939068		1	Oil filter element	A

4700950401 Service kit 500 h

17517

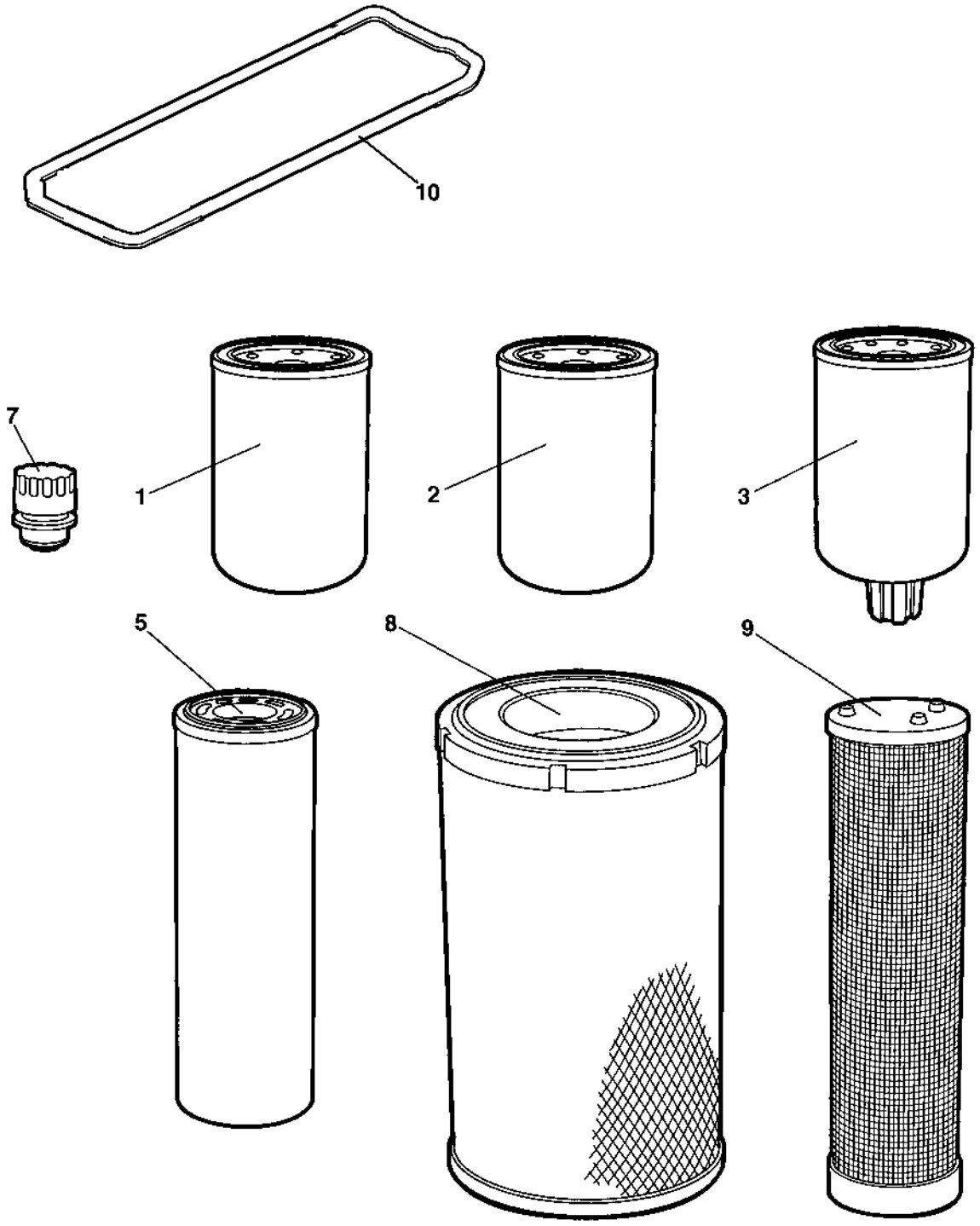

4700950401 Service kit 500 h

Item	Part No	Rem	Qty	Description	Code
	4700950401			Service kit 500 h (Page 12)	
1	4700939068		1	Oil filter element	A
2	4700950302		1	Fuel filter element	A
3	4700950301		1	Pre-fuel filter element	A
8	4700394686		1	Air filter element, main	A

4700950403 Service kit 1000 h

18818

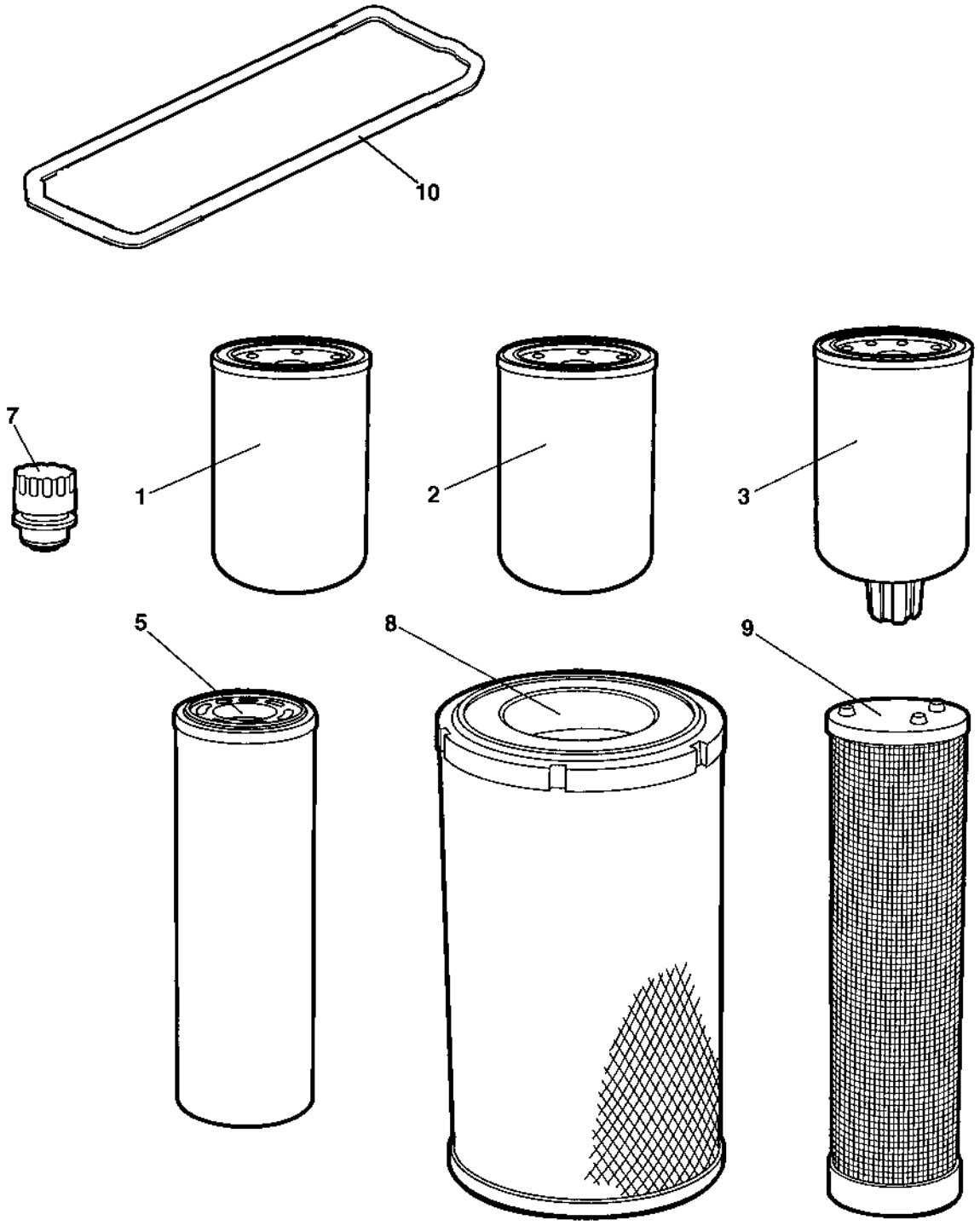

4700950403 Service kit 1000 h

Item	Part No	Rem	Qty	Description	Code
	4700950403			Service kit 1000 h (Page 14)	
1	4700939068		1	Oil filter element	A
2	4700950302		1	Fuel filter element	A
3	4700950301		1	Pre-fuel filter element	A
5	4700372229		1	Hydraulic oil filter element	A
7	4700357138		1	Ventilating filter	A
8	4700394686		1	Air filter element, main	A
9	4700394687		1	Air filter element, safety	A
10	4700939070		1	Gasket, valve cover	B

Repair kits

Repair kits

Item	Part No	Rem	Qty	Description	Code
5	4700938558		0	Steering hitch kit (Page 18)	A
10	4700938898		0	Eccentric shaft kit (Page 20)	
20	4700938891		0	Drum rotation kit (Page 22)	A
30	4700938876		0	Shock absorber kit, drum (Page 24)	

4700938558 Steering hitch kit

18818

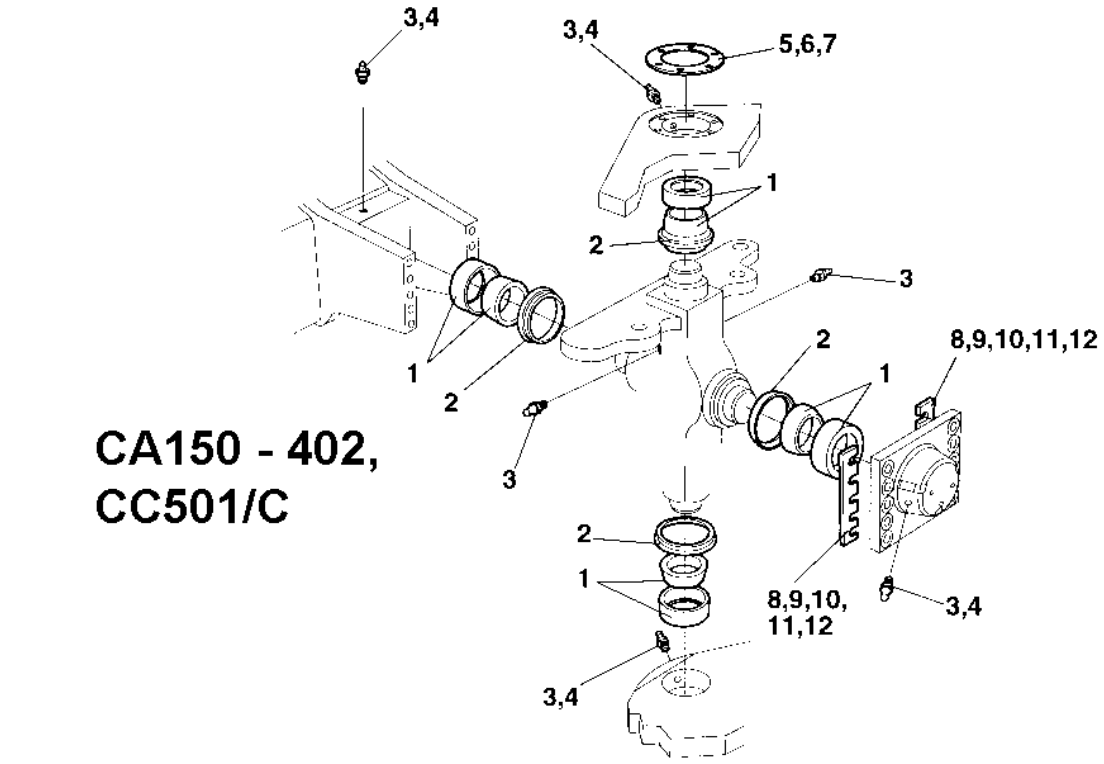

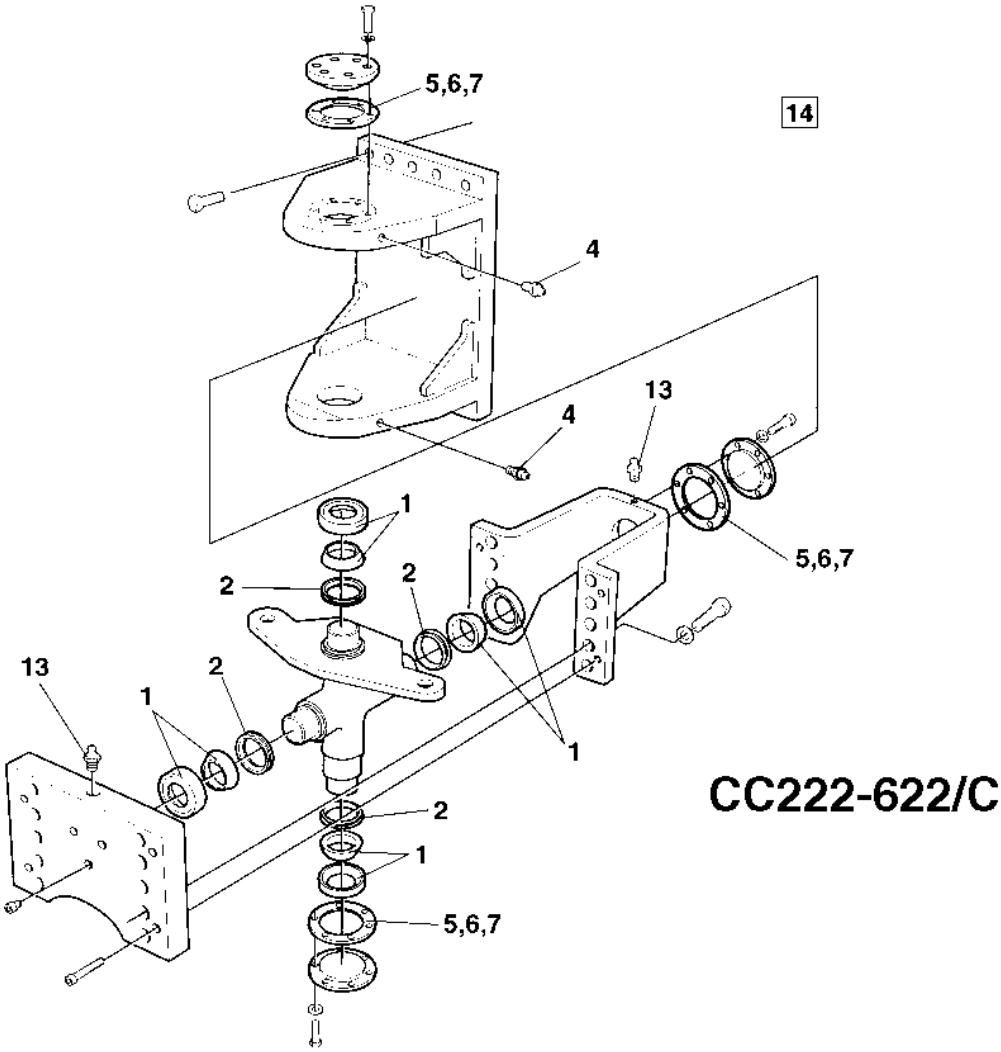

4700938558 Steering hitch kit

Item	Part No	Rem	Qty	Description		Code
	4700938558			Steering hitch kit (Page 18)		A
1	4700100040		4	Axial ball bearing		B
2	4700167032		4	Lip-type oil seal		C
3	4700310008	2	3	Grease nipple		C
4	4700926214		2	Grease fitting		C
5	4700337045		3	Shim	T=1,0 mm	C
6	4700345874		3	Shim	T=0,35 mm	C
7	4700345875		3	Shim	T=0,10 mm	C
8	4700345871	1	2	Shim	T=1,0 mm	C
9	4700345872	1	2	Shim	T=0,35 mm	C
10	4700345873	1	2	Shim	T=0,10 mm	C
11	4700380993	1	2	Shim	T = 2,0 mm	C
12	4700384498	1	2	Shim	T = 0,15 mm	C
13	4700929863	3	1	Grease nipple		C
14	4700904663		1	Lube grease " DYNAPAC special approved "		A
15			1	Instructions		A

1) Valid for CA150-402 and CC501/C
2) Valid for CC501/C
3) Valid for CC222/232/322/422/432/522/622/C

4700938898 Eccentric shaft kit

938558

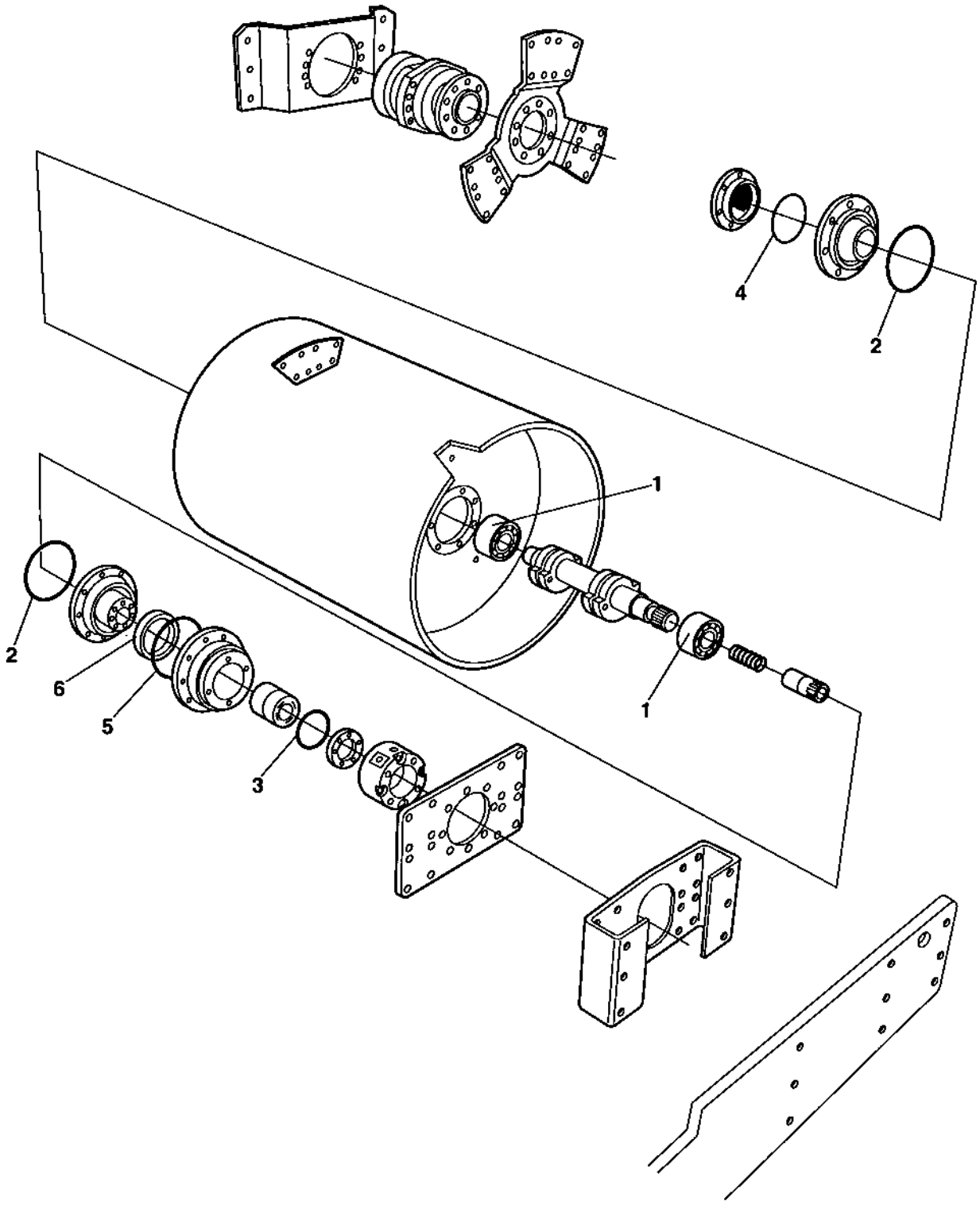

4700938898 Eccentric shaft kit

Item	Part No	Rem	Qty	Description	Code
	4700938898			Eccentric shaft kit (Page 20)	
1	4700114036		2	Spherical roller bearing	D
2	4700160344		2	O-ring 70	C
3	4700160105		1	O-ring 70	C
4	4700160362		1	O-ring	
5	4700929447		1	V-ring	B
6	4700167023		1	Seal ring	B

4700938891 Drum rotation kit

VALS2

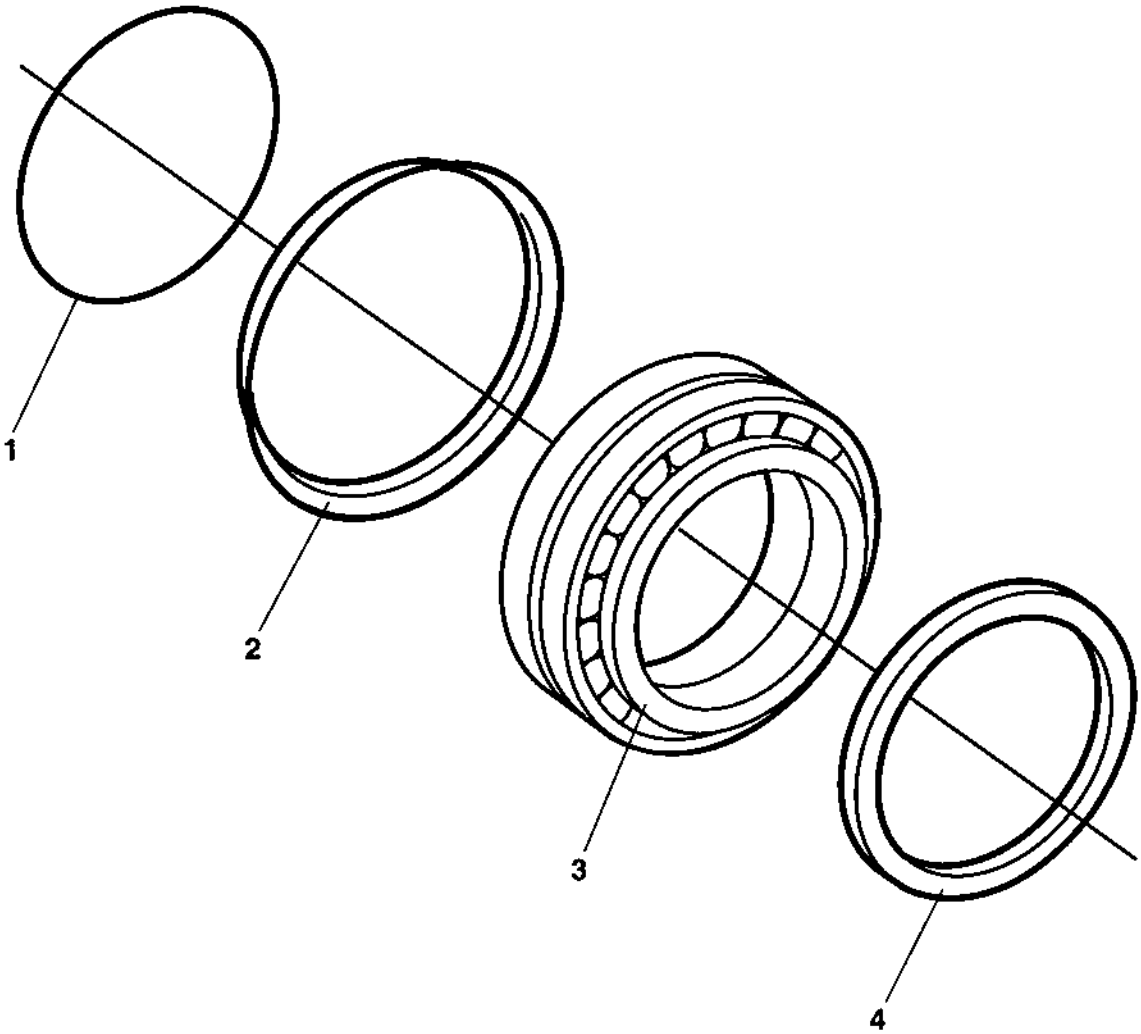

4700938891 Drum rotation kit

Item	Part No	Rem	Qty	Description	Code
	4700938891			Drum rotation kit (Page 22)	A
1	4700160105		1	O-ring 70	C
2	4700929447		1	V-ring	B
3	4700116041		1	Taper roller bearing	B
4	4700386272		1	Sealing	B

4700938876 Shock absorber kit, drum

RAMLAGER

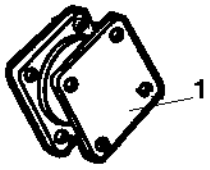

4700938876 Shock absorber kit, drum

Item	Part No	Rem	Qty	Description	Code
	4700938876			Shock absorber kit, drum (Page 24)	
1	4700336742		10	Shock absorber	B

Frame

Frame

Item	Part No	Rem	Qty	Description	Code
10				Frames (Page 28)	
20				Scraper (Page 30)	
40				Hitch (Page 32)	
50				Structure (Page 34)	

Frames

SHOCK ABSORB.

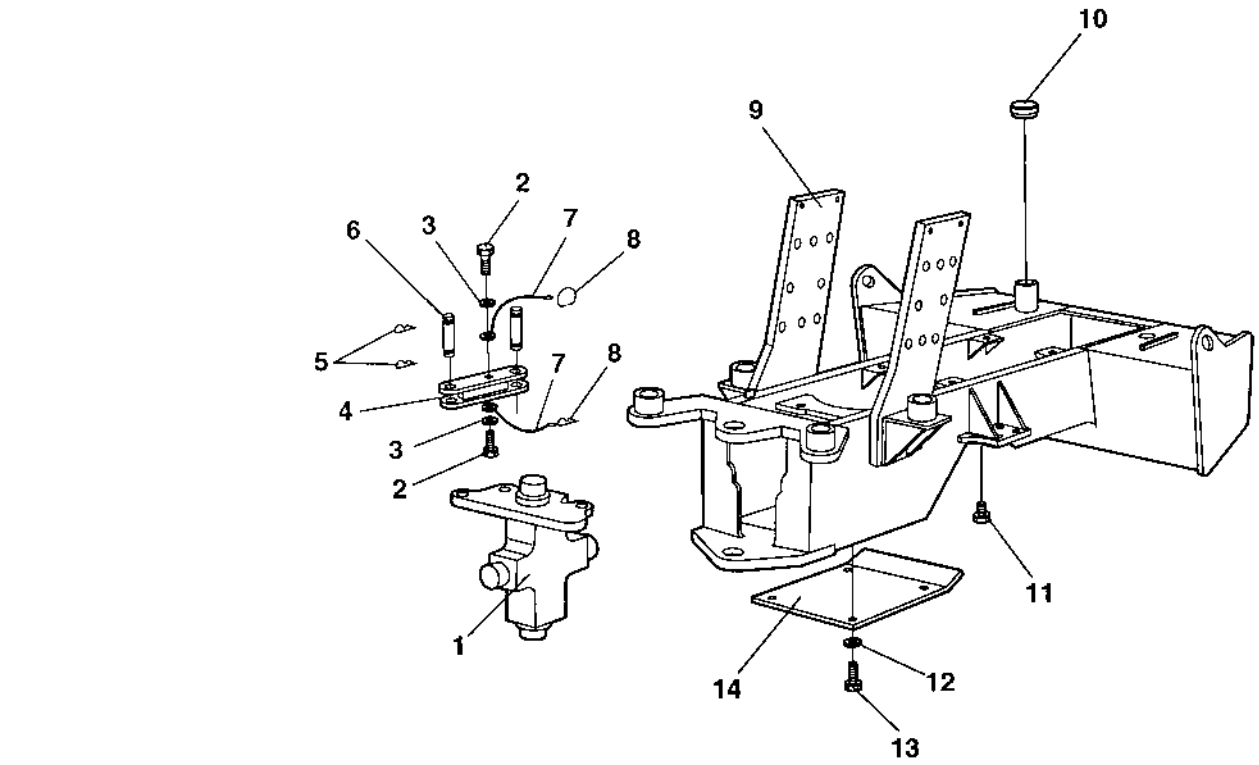

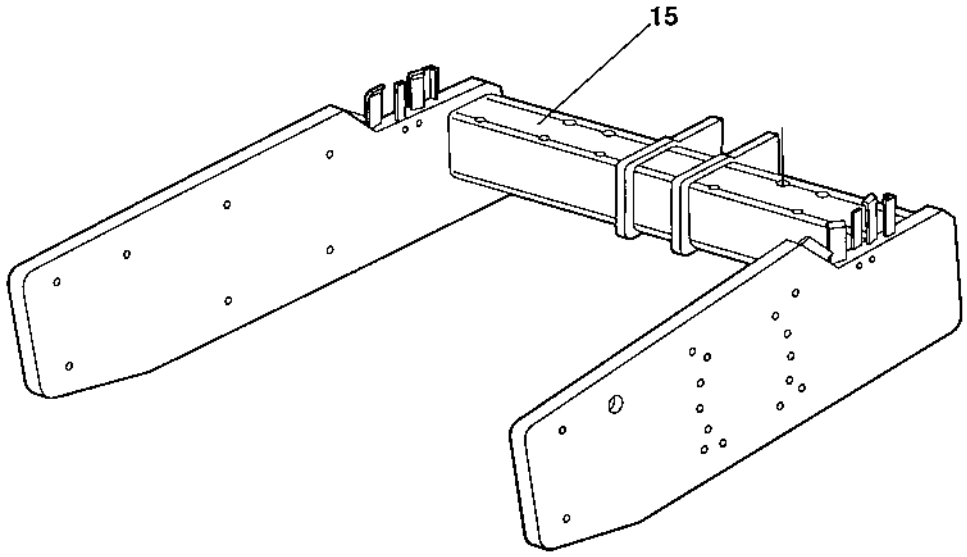

Frames

Item	Part No	Rem	Qty	Description	Code
1			1	Hitch (Page 32)	
2	4700500043		2	Screw M10x16H 8,8	C
3	4700904230		2	Steel plain washer	C
4	4700374869		1	Safety rod	
5	4700635061		3	Hair clip	C
6	4700347119		2	Shaft	C
7	4700343775		2	Wire	D
8	4700357488		1	Spring	C
9	4700394604		1	Tractor frame	D
10	4700373460		1	Fuel cap	D
11	4700813391		1	Magnetic plug	D
12	4700904557		4	Steel plain washer	C
13	4700500029		4	Hexagon head screw	C
14	4700372479		1	Protecting plate	
15	4700384443		1	Drum frame	

Scraper

17417

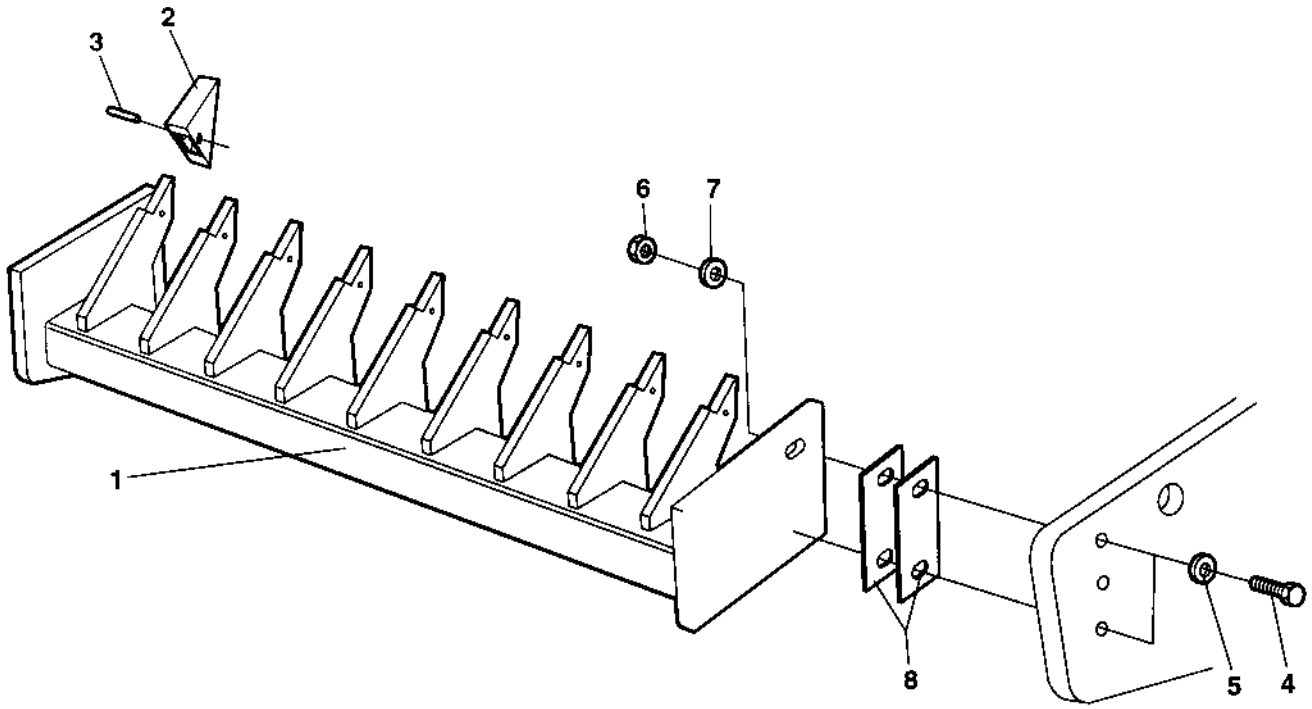

Scraper

Item	Part No	Rem	Qty	Description	Code
1	4700815680		1	Scraper	
2	4700385441		20	Tooth	
3	4700801631		20	Flexible pin 56,5x40	B
4	4700500210		4	Screw M20-2,5x100 8.8	
5	4700904233		4	Steel plain washer	C
6	4700586022		4	Lock nut M20-8	C
7	4700903290		4	Washer 21x36x6	C
8	4700815681		4	Shim T=3 mm	

Hitch

17235-1

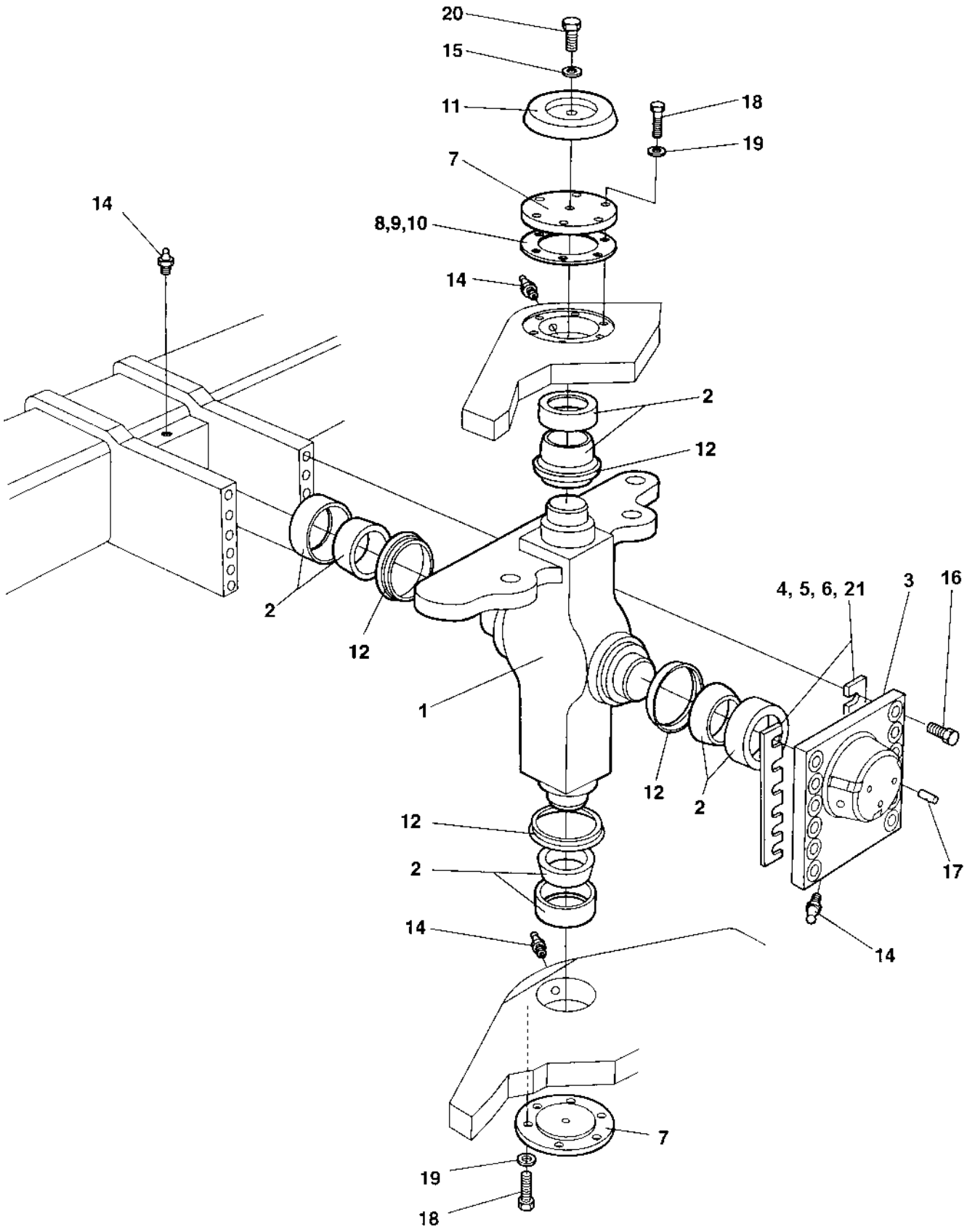

Hitch

Item	Part No	Rem	Qty	Description		Code
1	4700374900		1	Hitch		
2	4700100040		4	Axial ball bearing		B
3	4700373421		1	Bearing cover		D
4	4700345871	N		Shim	T=1,0 mm	C
5	4700345872	N		Shim	T=0,35 mm	C
6	4700345873	N		Shim	T=0,10 mm	C
7	4700337042		2	Bearing cover		D
8	4700337045	N		Shim	T=1,0 mm	C
9	4700345874	N		Shim	T=0,35 mm	C
10	4700345875	N		Shim	T=0,10 mm	C
11	4700343159		1	Cover		
12	4700167032		4	Lip-type oil seal		C
14	4700926214		4	Grease fitting		C
15	4700904229		1	Washer 8,4x16x1,5		C
16	4700500287		12	Screw M20x80 10,9		C
17	4700910995		3	Stop screw		C
18	4700500037		12	Screw		C
19	4700904231		12	Steel plain washer		C
20	4700500018		1	Screw M8-1,25x12 8,8		C
21	4700380993	N		Shim	T = 2,0 mm	C
	4700384498	N		Shim	T = 0,15 mm	C

Structure

16083

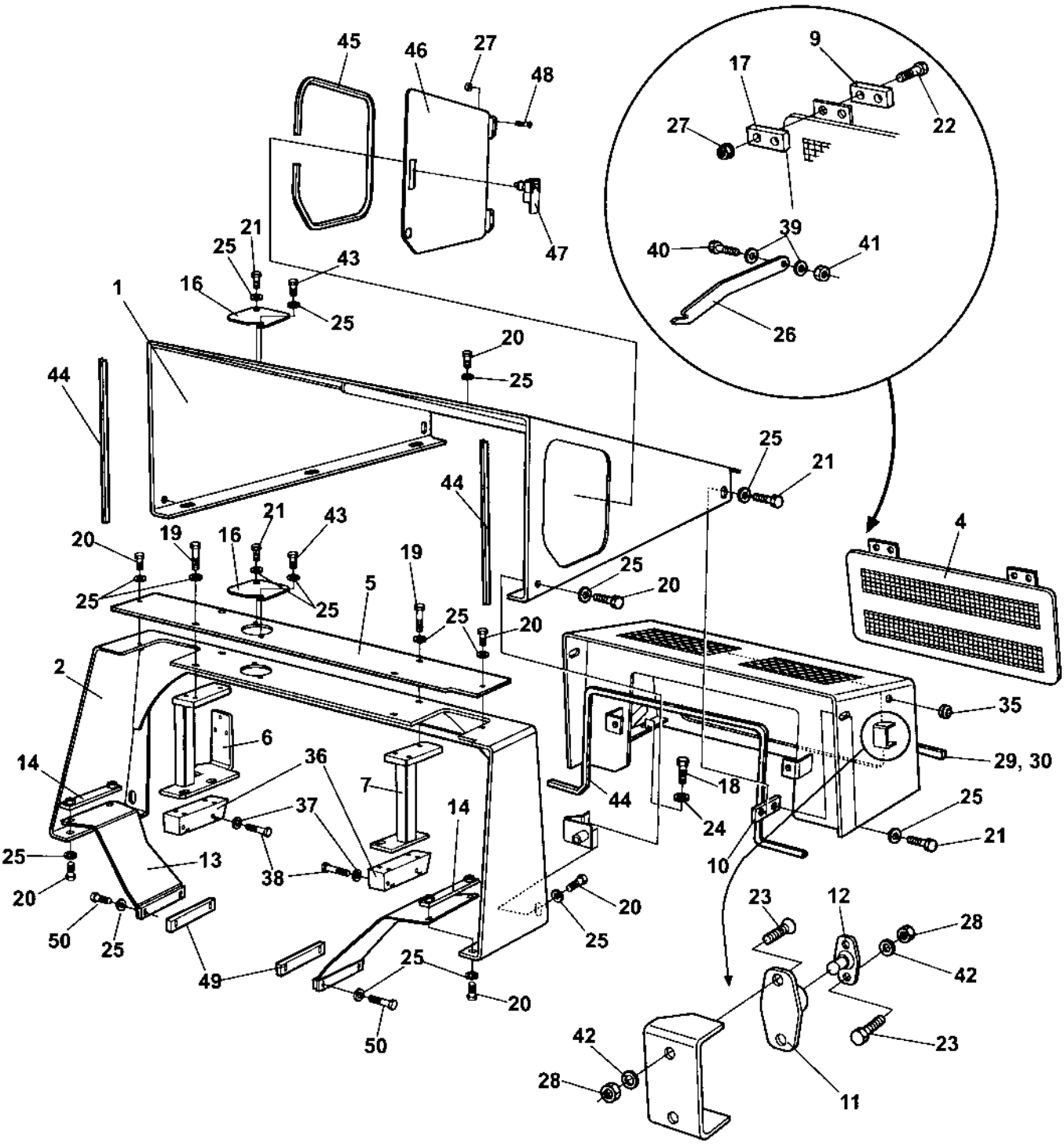

Structure

Item	Part No	Rem	Qty	Description	Code
1	4700394500		1	Hood	
2	4700376340		1	Protecting cover	
3	4700394878		1	Hood	
4	4700382406		1	Rear cover	
5	4700376354		1	Cover	
6	4700392786		1	Holder, right	
7	4700376349		1	Holder, left	
8	4700376366		2	Holder	
9	4700380755		2	Holder	
10	4700380109		2	Holder	
11	4700450066		2	Door bumper	D
12	4700450067		2	Door bumper	A
13	4700381348		1	Holder	
14	4700381330		2	Holder	
15	4700381347		1	Holder	
16	4700381297		2	Cover	
17	4700380012		2	Holder	
18	4700500031		4	Screw	C
19	4700500047		4	Hexagon head screw	C
20	4700500022		19	Screw M8x30H 8.8 A2K	C
21	4700500053		6	Screw M8x20H 8.8	C
22	4700924875		4	Screw	
23	4700904504		8	Screw M5 x 18	C
24	4700904567		4	Washer 10,5x28x6 HB305	C
25	4700904640		34	Washer 8,4x22x3	C
26	4700382411		1	Hook	
27	4700902285		8	Nut	C
28	4700586001		8	Lock nut	C
29	4700902379	B	1XL	Edge trim	C
30	4700902379	C	1XL	Edge trim	C
35	4700791475	A	2	Grommet	
36	4700381989		2	Holder	
37	4700904231		4	Steel plain washer	C
38	4700500133		4	Screw	C
39	4700904228		2	Washer 6,4x12x1,5	C
40	4700500040		1	Screw M6-1x20 8,8	C
41	4700586002		1	Lock nut M6 -8	C
42	4700904281		8	Washer 5,3x10x1 300HV	C
43	4700500505		2	Screw M8x20 8.8	
44	4700902166	E	1XL	Edge trim	D
45	4700202028	D	1XL	Edge trim	D
46	4700394457		1	Cover	
47	4700792549		1	Lock	
48	4700513012		4	Screw M6x20 10,9	C
49	4700384776		2	Spacer	
50	4700500023		4	Screw M8-1,25x40 8,8	C

A) With membrane
B) L=0,330M
C) L=0,550M
D) L=1,060M
E) L=2,062M

Drum

Item	Part No	Rem	Qty	Description	Code
10				Drum (Page 38)	

Drum

18485-2

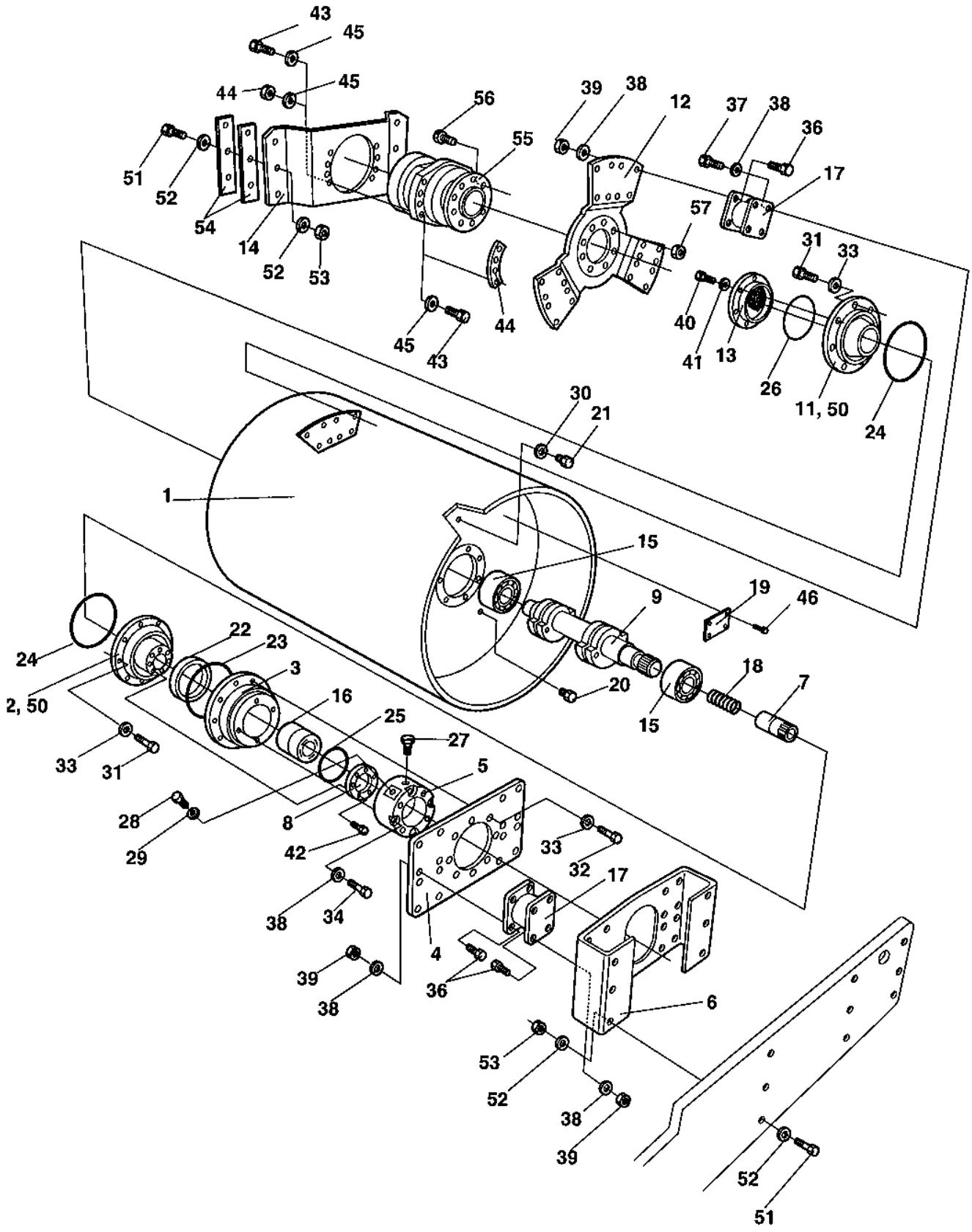
43
45
44
45
56
39
38
12
37
38
36
55
17
51
52
54
14
52
53
57
31
33
44
40
45
43
41
13
26
11, 50
24
30
21
1
15
19
46
9
22
23
24
3
18
7
2, 50
16
20
15
25
27
33
31
5
28
8
29
42
33
32
17
38
34
4
39
36
38
6
53
52
38
39
52
51

Drum

Item	Part No	Rem	Qty	Description	Code
1	4700372635		1	Drum	
2	4700374836		1	Bearing housing	
3	4700343318		1	Bearing housing	D
4	4700343322		1	Holder plate	
5	4700343561		1	Motor adapter	
6	4700372641		1	Holder plate	
7	4700370365		1	Splined sleeve	C
8	4700343462		1	Bearing cover	
9	4700374779		1	Eccentric	
11	4700374907		1	Bearing housing	
12	4700386286		1	Drive disc	
13	4700343907		1	Bearing cover	
14	4700372639		1	Holder plate	
15	4700114036		2	Spherical roller bearing	D
16	4700116041		1	Taper roller bearing	B
17	4700336742		10	Shock absorber	B
18	4700349715		1	Spring	C
19	4700343801		1	Sign plate	D
20	4700922552		1	Oil level glass	
21	4700343744		1	Magnetic plug	C
22	4700167023		1	Seal ring	B
23	4700929447		1	V-ring	B
24	4700160344		2	O-ring 70	C
25	4700160105		1	O-ring 70	C
26	4700160362		1	O-ring	
27	4700926736		1	Breather	C
28	4700370231		1	Plug	C
29	4700162018		1	Sealing	B
30	4700162017		1	Seal ring	B
31	4700500076		16	Screw M16x55	C
32	4700500076		8	Screw M16x55	C
33	4700904232		24	Washer	C
34	4700500133		4	Screw	C
36	4700500194		56	Screw	C
37	4700500046		24	Screw M12x025H	C
38	4700904231		84	Steel plain washer	C
39	4700570007		56	Hexagon nut M12	
40	4700500028		6	Screw	C
41	4700904230		6	Steel plain washer	C
42	4700508019		8	Screw M8x25	C
43	4700500208		8	Screw M20x80	
44	4700570015		8	Nut M20	
	4700385720	2	2	Mounting plate	
45	4700904233		16	Steel plain washer	C
46	4700527002		4	Drive screw	C
50	4700900775		6	Plug	C
51	4700500209		12	Screw M20-2,5x90 8,8	
52	4700904233		24	Steel plain washer	C
53	4700586022		12	Lock nut M20-8	C
54	4700815056		N	Shim	
55		1	1	Hydraulic motor	
56		1	10	. Bolt	
57		1	10	. Nut	

1) See Hydraulic pages - Propulsion system, front.
2) Replaces 8 pcs of nuts P/N 4700570015.

Engine

Item	Part No	Rem	Qty	Description	Code
10				Engine Cummins QSB3.3 (Page 42)	
20				Cooling system (Page 44)	
30				Combustion air system (Page 48)	
40				Fuel system (Page 50)	
50				Exhaust system (Page 52)	

Engine Cummins QSB3.3

17254-1

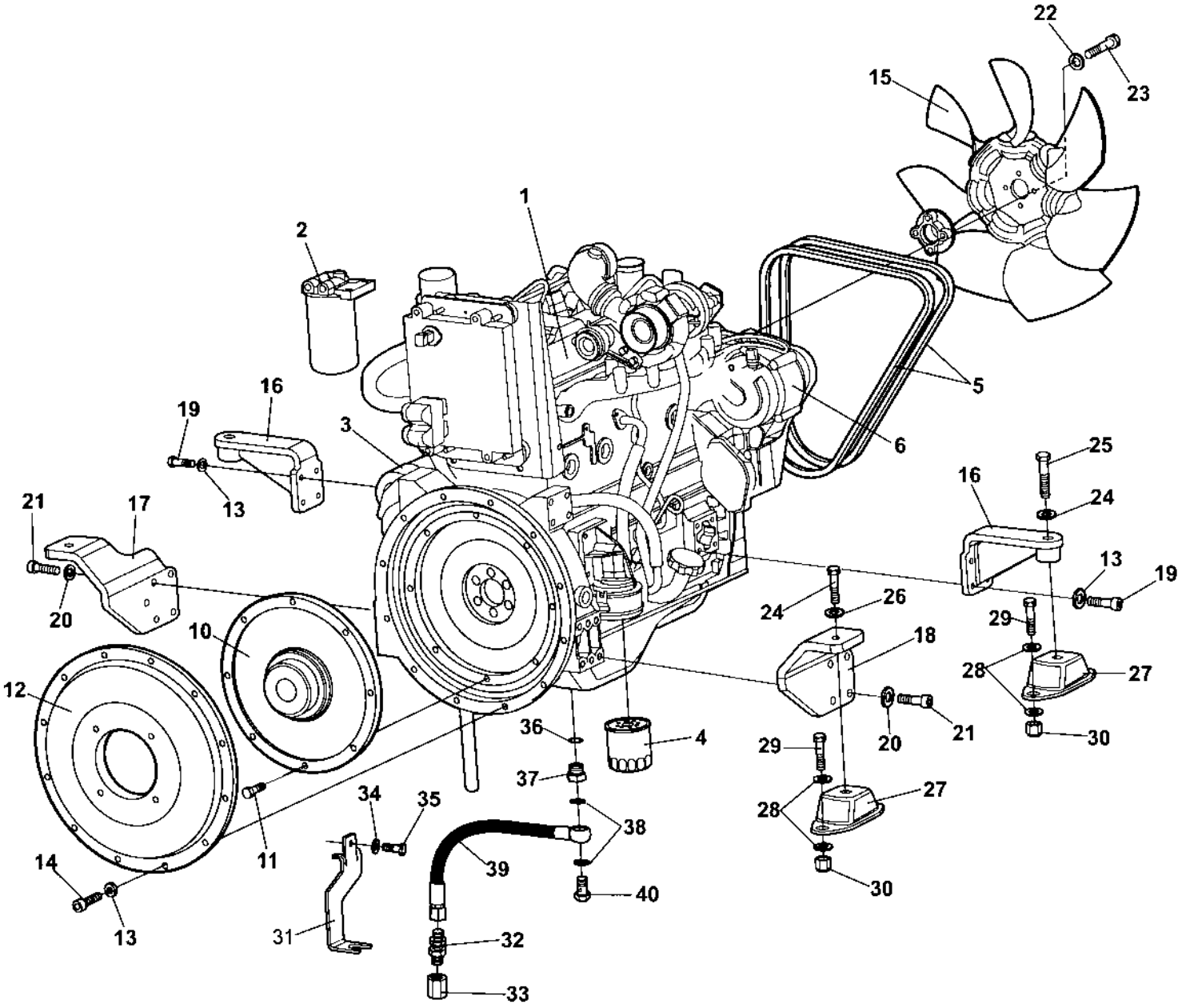

Engine Cummins QSB3.3

Item	Part No	Rem	Qty	Description	Code
1	4700394346		1	Engine Cummins QSB3.3	
2	4700950302		1	. Fuel filter element	A
3	4700950303		1	. Starter	C
4	4700939068		1	. Oil filter element	A
5	4700950315		1	. V-belt	B
6	4700950304		1	. Alternator	C
10	4700370229		1	Coupling, cpl	
11	4700500030		8	Hexagon head screw	C
12	4700359403		1	Pump bracket	D
13	4700904637		20	Washer	C
14	4700508029		12	Screw M10-1,5x30H 8,8	C
15	4700395957		1	Fan	
16	4700394610		2	Engine bracket	
17	4700394611		1	Engine bracket	
18	4700394612		1	Engine bracket	
19	4700500029		8	Hexagon head screw	C
20	4700904638		8	Washer 12x22x2	
21	4700508079		8	Screw M12-1,75x35H 8,8	
22	4700904229		4	Washer 8,4x16x1,5	C
23	4700500025		4	Screw M8-1,25x50 8,8	C
24	4700904232		4	Washer	C
25	4700500165		2	Screw M16-2,0x75 8,8	C
26	4700500076		2	Screw M16x55	C
27	4700387129		4	Shock absorber	D
28	4700904703		16	Washer	C
29	4700500194		8	Screw	C
30	4700586019		8	Lock nut	C
31	4700384721		1	Bracket	
32	4700230515		1	Connector	C
33	4700330383		1	Cap hydraulic	C
34	4700904640		1	Washer 8,4x22x3	C
35	4700500100		1	Screw	
36	4700162019		1	Seal ring	D
37	4700379480		1	Reducer	
38	4700330331		2	Washer 18,2x23,9x1,5	C
39	4700393116		1	Hose	
40	4700904292		1	Hollow screw	

Cooling system

18718

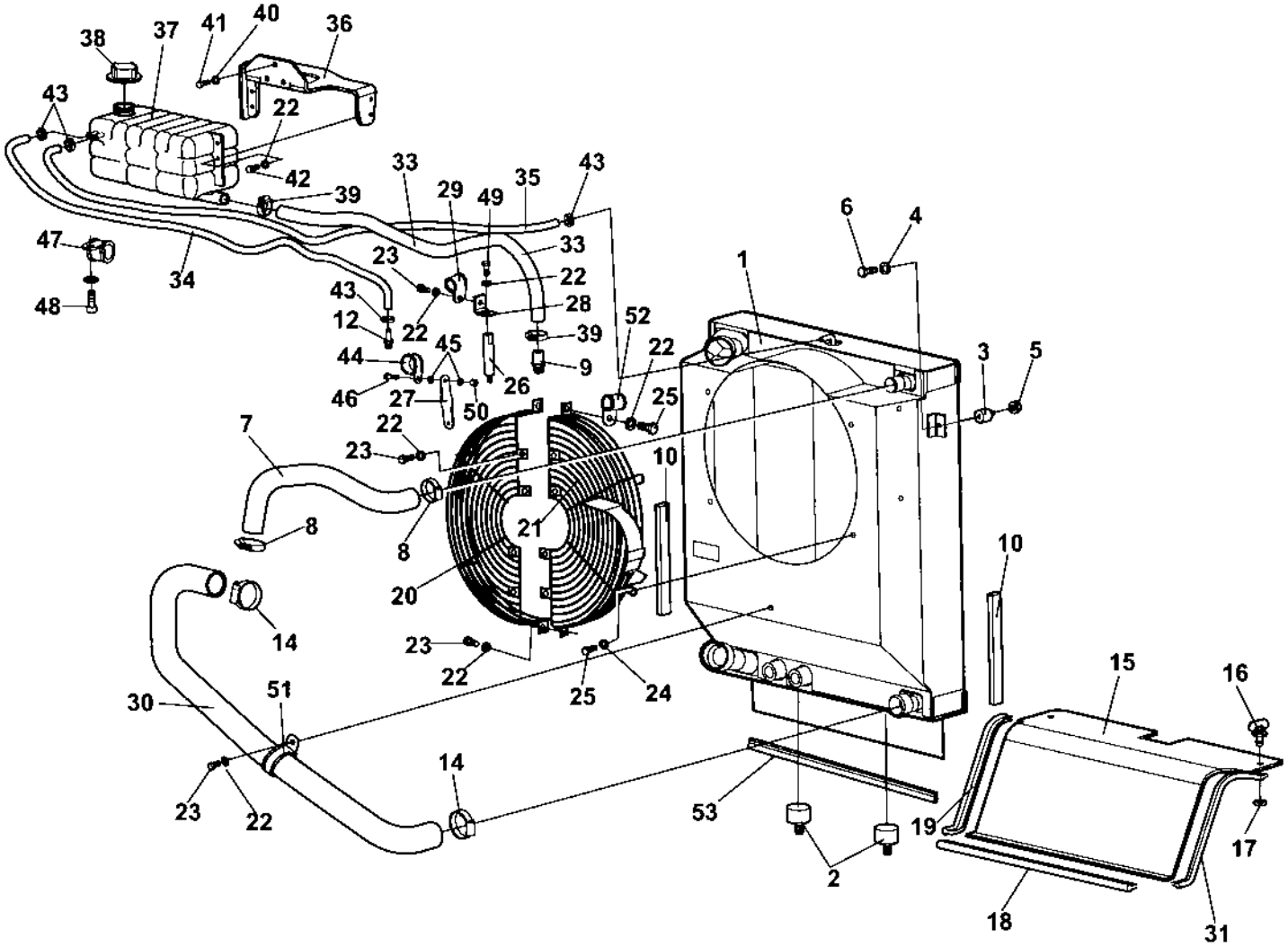

Cooling system

Item	Part No	Rem	Qty	Description	Code
1	4700394497		1	Radiator	
	4700950334		1	. Water cooler	
	4700950335		1	. Oil cooler	
	4700950336		1	. Combustion air cooler	
	4700950337		1	. Fan housing	
2	4700904551		2	Shock absorber	
3	4700371774		2	Shock absorber	
4	4700904639		2	Washer 6,7x14x1,5	C
5	4700902285		2	Nut	C
6	4700500012		2	Screw M6x12	C
7	4700394620		1	Hose	
8	4700313008		2	Hose clamp	C
9	4700384821		1	Connector	
10	4700202043	A	2XL	Rubber strip	D
12	4700792544		1	Connector	
14	4700313010		2	Hose clamp	C
15	4700394863		1	Air inlet	
16	4700904486		2	Quick lock	
17	4700926985		2	Quick lock washer	C
18	4700902166	B	1XL	Edge trim	D
19	4700902166	C	1XL	Edge trim	D
20	4700384814		1	Fan guard	
21	4700385306		1	Fan guard	
22	4700904229		14	Washer 8,4x16x1,5	C
23	4700500018		7	Screw M8-1,25x12 8,8	C
24	4700904556		4	Washer 8,4x16x3,0	C
25	4700500019		5	Screw M8x16H 8.8 A2K	C
26	4700393855		1	Distance screw	
27	4700394633		1	Holder	
28	4700908136		1	Bracket	
29	4700921050		1	Clamp	C
30	4700394621		1	Hose	
31	4700904076	D	1XL	Edge trim	D
33	4700205027	E	1XL	Coolant hose	
34	4700246069	F	1XL	Fuel hose 3/8"	
35	4700246069	G	1XL	Fuel hose 3/8"	
36	4700392170		1	Holder	
37	4700392313		1	Expansion tank	
38	4700903714		1	Cap	
39	4700313006		2	Hose clamp	
40	4700904230		3	Steel plain washer	C
41	4700500028		3	Screw	C
42	4700500021		4	Screw M8-1,25x25 8.8	C
43	4700313075		4	Hose clamp	C
44	4700921084		1	Pipe clamp	
45	4700904228		2	Washer 6,4x12x1,5	C
46	4700500040		1	Screw M6-1x20 8,8	C
47	4700921031		1	Clamp	C
48	4700500013		1	Screw M6-1x16 8,8	C
49	4700500053		1	Screw M8x20H 8.8	C
50	4700586002		1	Lock nut M6 -8	C
51	4700904352		1	Clamp	

A) L=0,280M
B) L=0,620M
C) L=0,330M
D) L=0,580M
E) L=1,200M
F) L=1,600M
G) L=1,700M

Cooling system

18760

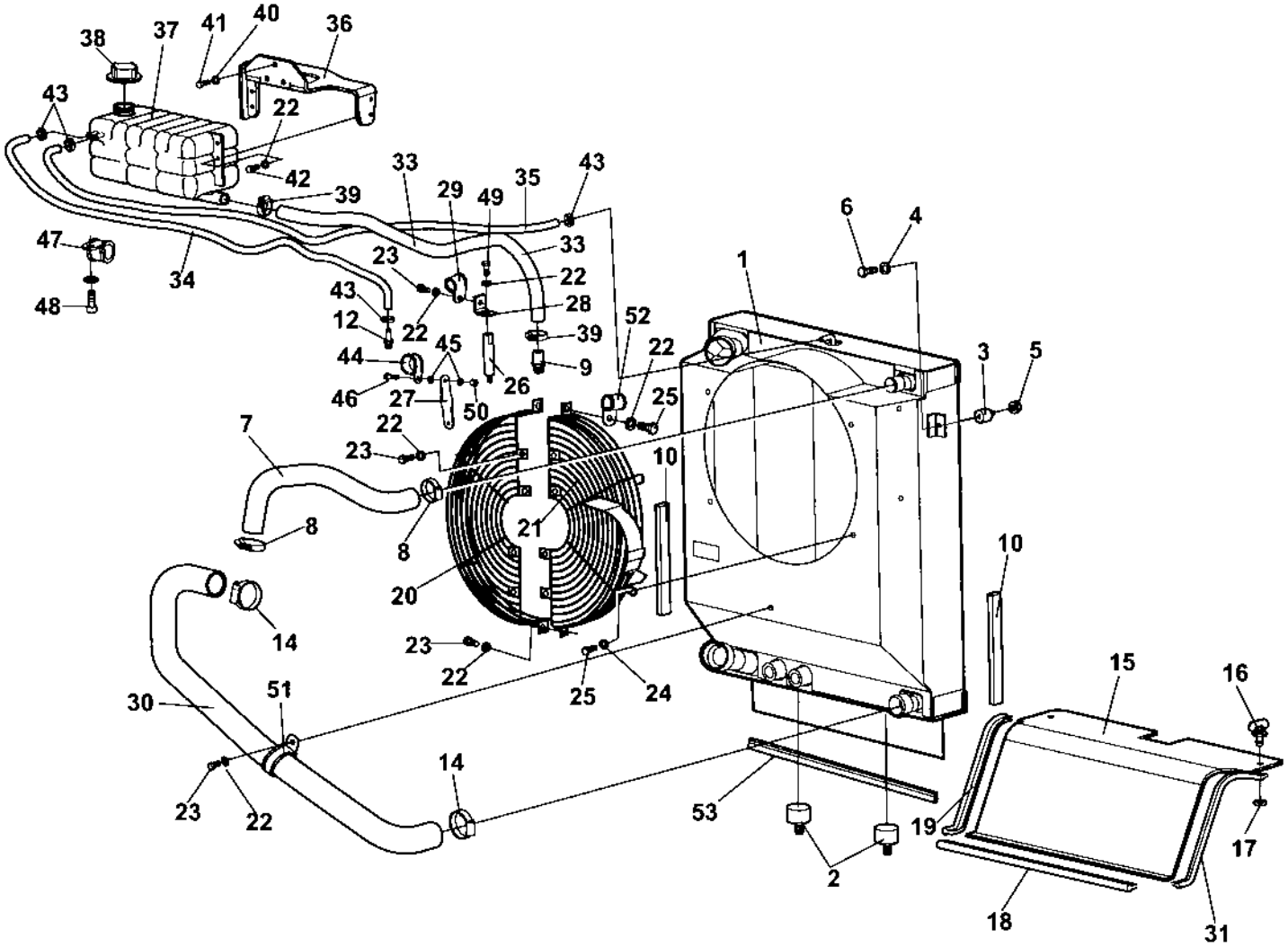

Cooling system

Item	Part No	Rem	Qty	Description	Code
52	4700904346		1	Clamp	
53	4700904076	H	1XL	Edge trim	D

H) L=0,495M

Combustion air system

18760

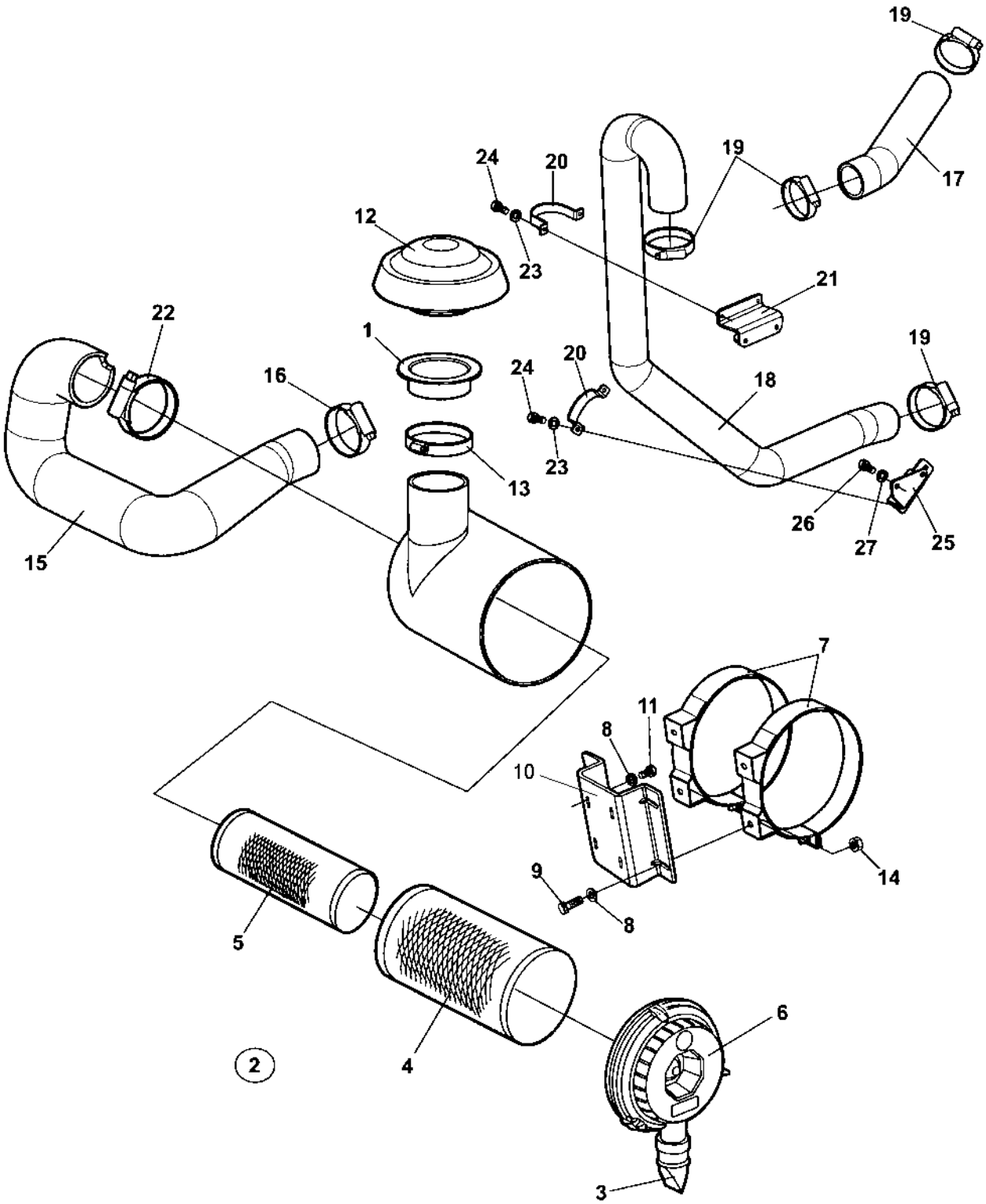

Combustion air system

Item	Part No	Rem	Qty	Description	Code
1	4700348309		1	Rubber bushing	
2	4700394680		1	Air cleaner Cpl	
3	4700908399		1	. Vacuator valve	C
4	4700394686		1	. Air filter element, main	A
5	4700394687		1	. Air filter element, safety	A
6	4700395022		1	. Cover	
7	4700813791		2	Mounting band	D
8	4700904556		8	Washer 8,4x16x3,0	C
9	4700500053		4	Screw M8x20H 8.8	C
10	4700393085		1	Filter bracket	
11	4700500021		4	Screw M8-1,25x25 8.8	C
12	4700499266		1	Protection cover	D
13	4700904060		1	Hose clamp	C
14	4700586003		4	Lock nut M8	C
15	4700394614		1	Air inlet hose	
16	4700392810		1	Hose clamp	
17	4812110517		1	Charge air hose	
18	4700394616		1	Charge air hose	
19	4700386966		4	Hose clamp 2.3/4"-3.5/8"	
20	4700393097		2	Clamp	
21	4700394918		1	Bracket	
22	4700389600		1	Hose clamp	
23	4700904228		4	Washer 6,4x12x1,5	C
24	4700500040		4	Screw M6-1x20 8,8	C
25	4700394921		1	Bracket	
26	4700500048		2	Screw M10-1,5x20 8,8	C
27	4700904230		2	Steel plain washer	C

Fuel system

18761

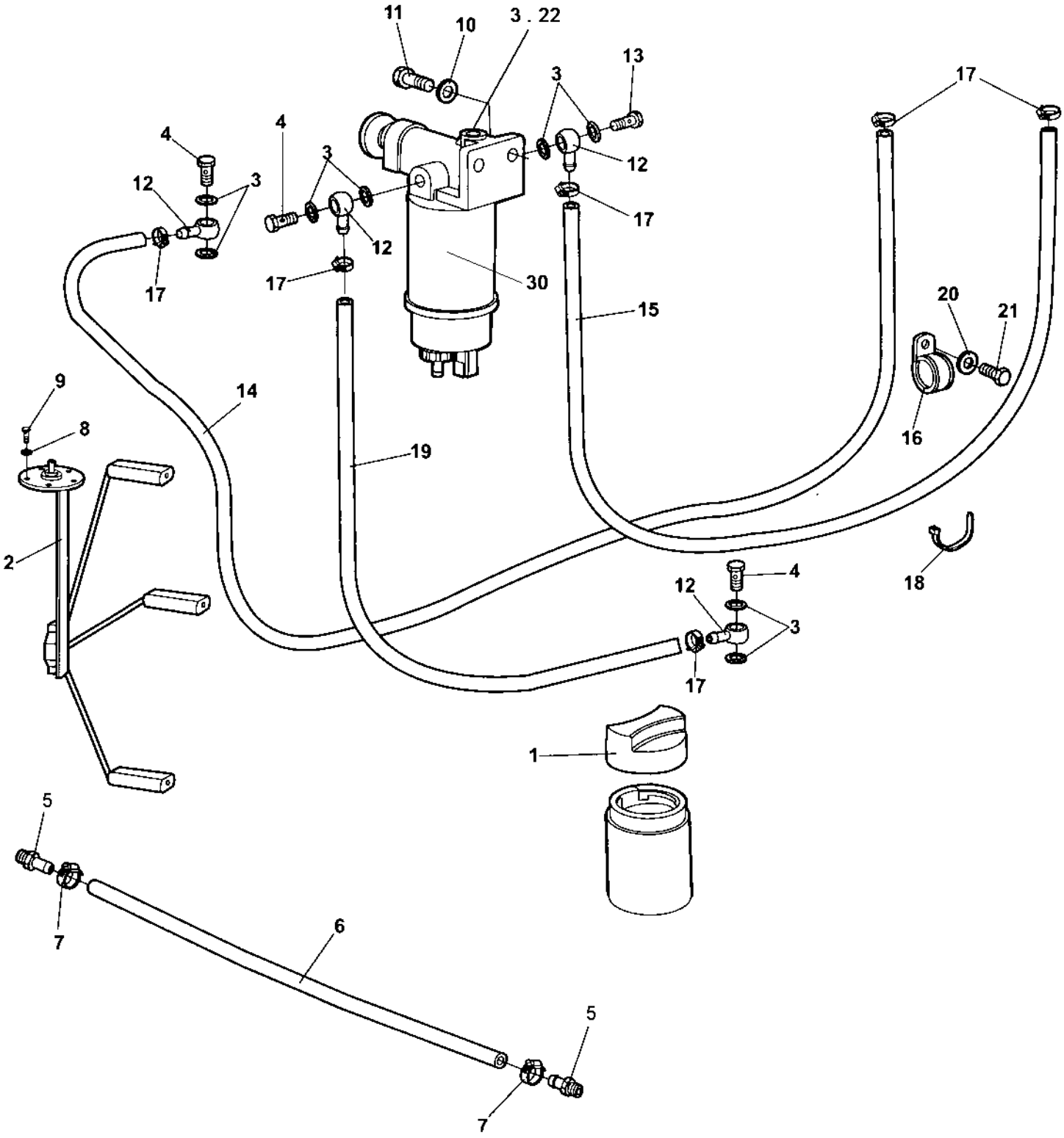

Fuel system

Item	Part No	Rem	Qty	Description	Code
1	4700373460		1	Fuel cap	D
2	4700904695		1	Fuel level sender	D
	4700945777		1	Gasket	
3	4700747282		9	Copper washer	
4	4700330171		3	Hollow screw	C
5	4700373574		2	Hose connection	
6	4700244054	A	1XL	Hose reinforced	C
7	4700313002		2	Hose clamp 13-20 mm	C
8	4700904281		5	Washer 5,3x10x1 300HV	C
9	4700500006		5	Screw M5x16	C
10	4700904230		2	Steel plain washer	C
11	4700500029		2	Hexagon head screw	C
12	4700330170		4	Banjo nipple	
13	4700234919		1	Screw M12-1,5-24-3	
14	4700904985	B	1XL	Fuel hose	C
15	4700904985	C	1XL	Fuel hose	C
16	4700923008		1	Clamp	
17	4700313001		6	Hose clamp	
18	4700313041		1	Cable ties	C
19	4700904985	D	1XL	Fuel hose	C
20	4700904637		1	Washer	C
21	4700500029		1	Hexagon head screw	C
22	4700903190		1	Steel plug	
30	4700950301		1	Pre-fuel filter element	A

A) L=0,650M
B) L=2,050M
C) L=1,700M
D) L=0,500M

Exhaust system

18730

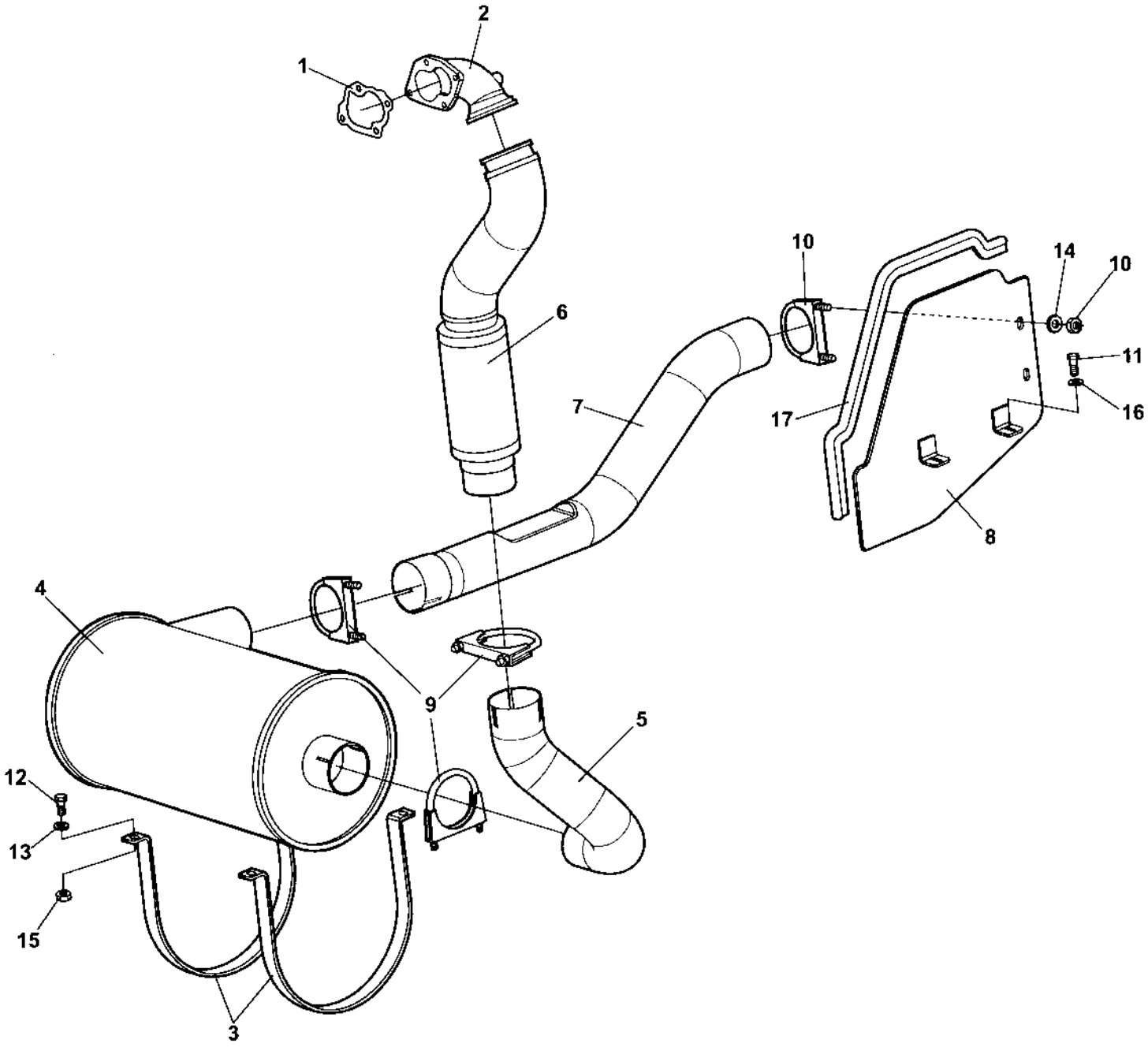

Exhaust system

Item	Part No	Rem	Qty	Description	Code
1	4700395108		1	Gasket	
2	4700391962		1	Exhaust pipe	
3	4700373625		2	Clamp	
4	4700373624		1	Muffler	D
5	4700394793		1	Exhaust pipe	
6	4700394618		1	Exhaust pipe	
7	4700394794		1	Exhaust pipe	
8	4700394883		1	Bracket	
9	4700313094		3	Pipe clamp	C
10	4700313093		1	Pipe clamp	C
11	4700500053		2	Screw M8x20H 8.8	C
12	4700500031		4	Screw	C
13	4700904230		4	Steel plain washer	C
14	4700904640		2	Washer 8,4x22x3	C
15	4700902287		4	Nut	C
16	4700904556		2	Washer 8,4x16x3,0	C
17	4700902166	A	1XL	Edge trim	D

A) L=0,600M

Transmission

Item	Part No	Rem	Qty	Description	Code
10				Rear axle and wheels (Page 56)	
20	4700384789			Rear axle (Page 58)	

Rear axle and wheels

18723

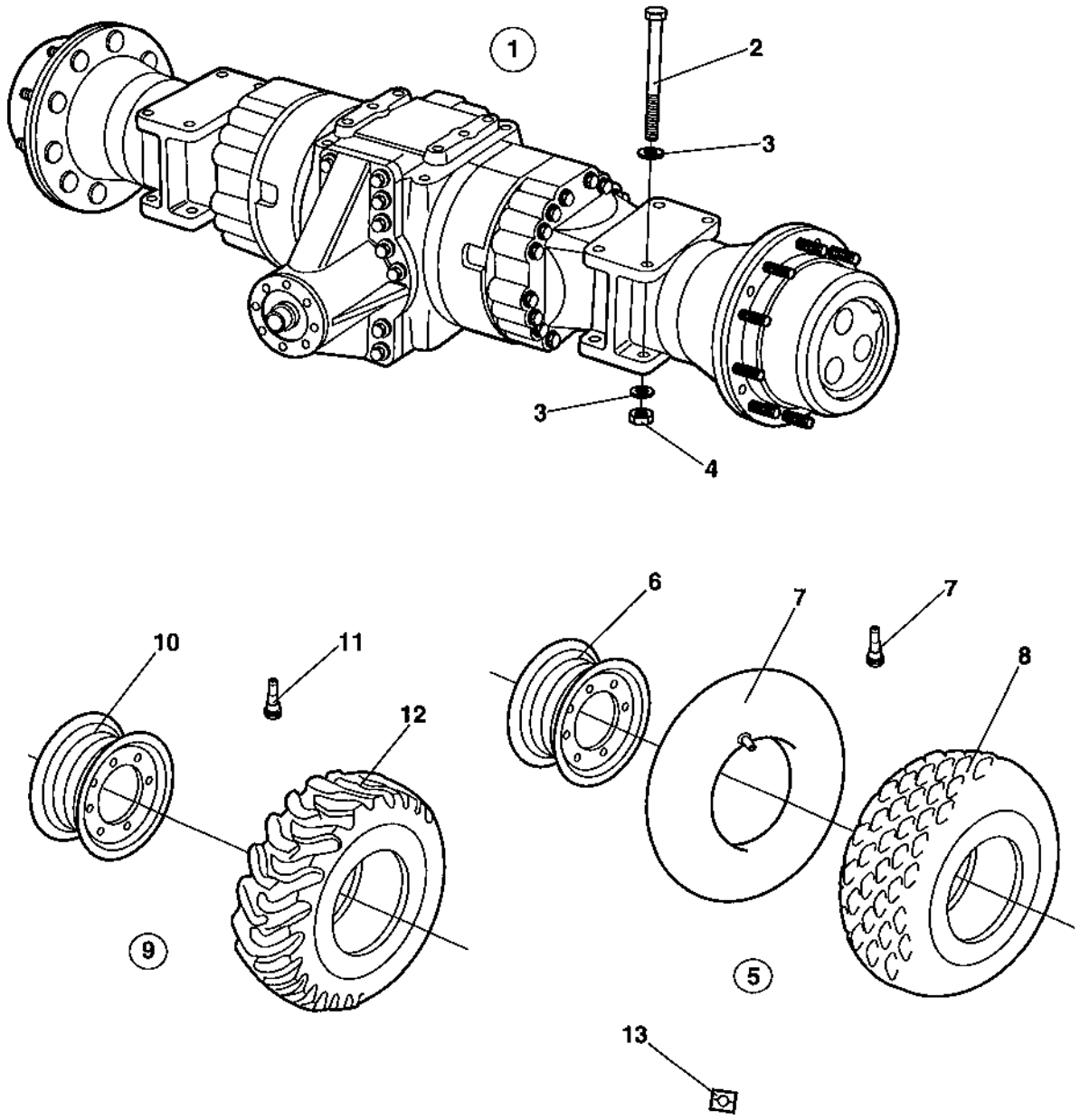

Rear axle and wheels

Item	Part No	Rem	Qty	Description	Code
1	4700384789		1	Rear axle (Page 58)	
2	4700500295		8	Screw M20x240	
3	4700904233		16	Steel plain washer	C
4	4700901145		8	Lock nut M20-10	
5	4700379545	G	2	Wheel, cpl	
	4700379548	A,G	1	Wheel, cpl	
6	4700371594		1	. Rim	
7	4700792261	H	1	. Air charging valve Straight	B
8	4700379531		1	. Tyre	
9	4700379546	B,G	1	Tractor tyre, cpl	
	4700379547	C,G	1	Tractor tyre, cpl	
	4700379549	D,G	1	Tractor tyre, cpl	
	4700379550	E,G	1	Tractor tyre, cpl	
10	4700371594		1	. Rim	
11	4700792261		1	. Air charging valve Straight	B
12	4700379532		1	. Tyre	D
13	4700903985	F	2	Decal "SAFETY", "TYRE IN BALLAST"	

A) Liquidfilled, option
B) Left, option
C) Right, option
D) Liquid filled, left, option
E) Liquid filled, right, option
F) Used with Liquid filled tyres.
G) Tubeless tyre.
H) Used with tubeless Wheel cpl.

4700384789 Rear axle

18223

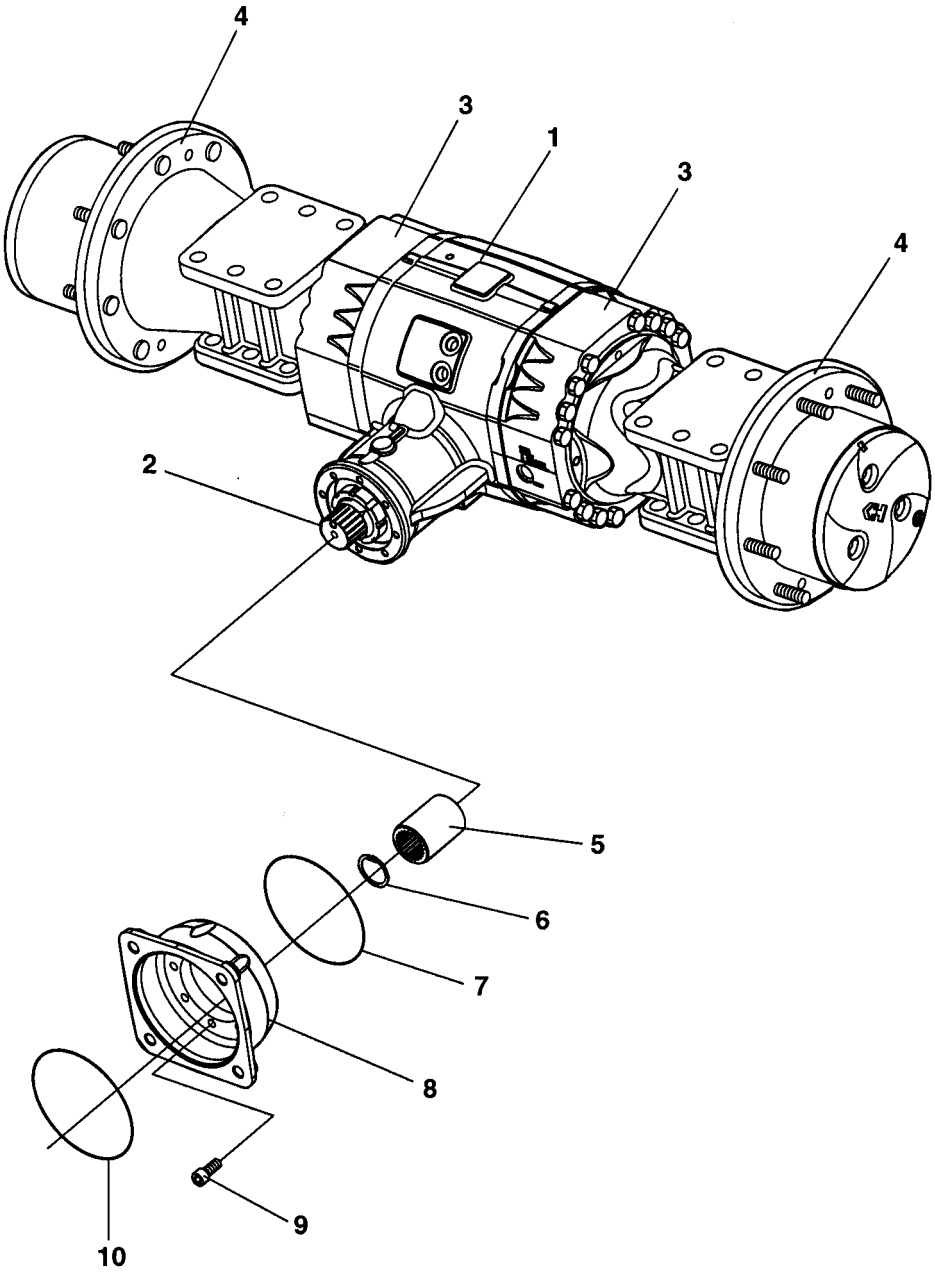

4700384789 Rear axle

Item	Part No	Rem	Qty	Description	Code
1			1	Housing (Page 60)	
2			2	Differential with limited slip (Page 62)	
3			1	Brakes (Page 64)	
4			2	Planet gear (Page 66)	
5	4700901833		1	Splined sleeve	
6	4700909632		1	Snap ring	
7	4700929648		1	O-ring	D
8	4700909631		1	Flange	
9	4700929712		8	Screw	
10	4700909630		1	O-ring	D

Housing

17492

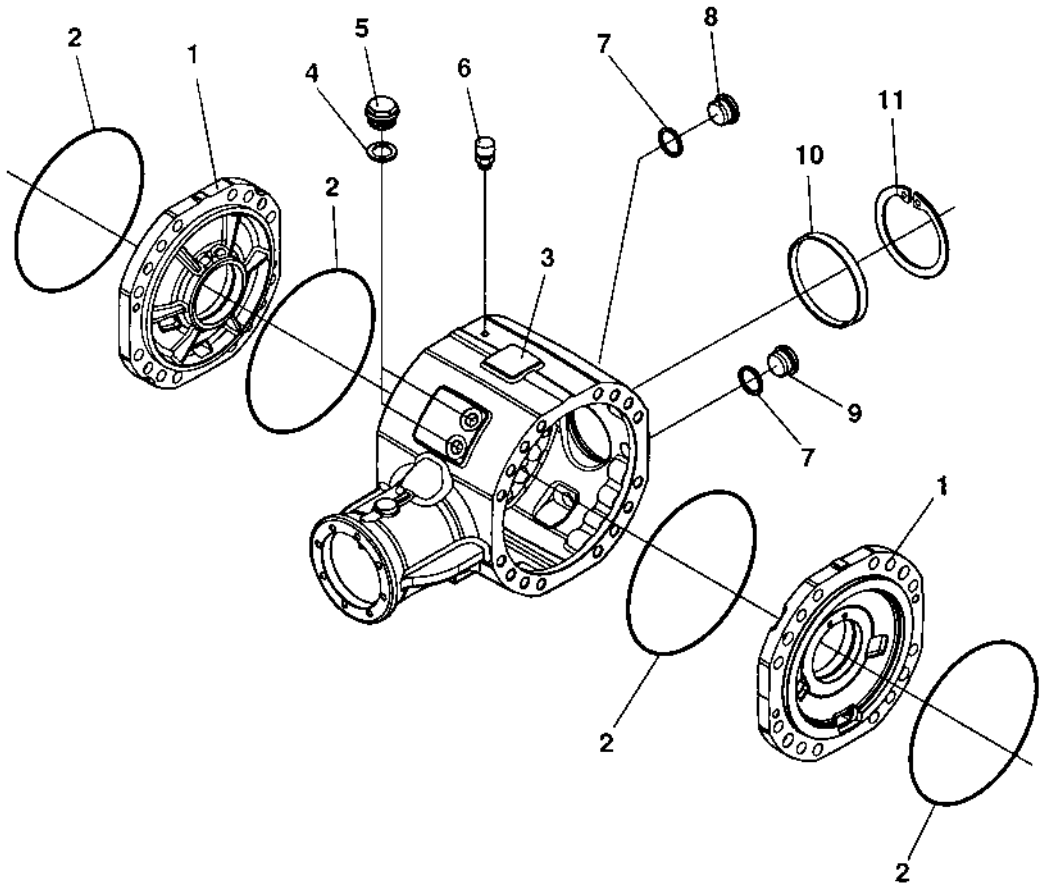

Housing

Item	Part No	Rem	Qty	Description	Code
1	4700938980		2	Cover	
2	4700938981		4	O-ring	
3	4700938982		1	Housing	
4	4700938983		2	Sealing washer	
5	4700909544		4	Screw	
6	4700938984		1	Vent nipple	
7	4700909607		2	Seal	D
8	4700938985		1	Magnetic plug	
9	4700909596		1	Plug	
10	4700938986		1	Plug	
11	4700938987		1	Circlip	

Differential with limited slip

17490

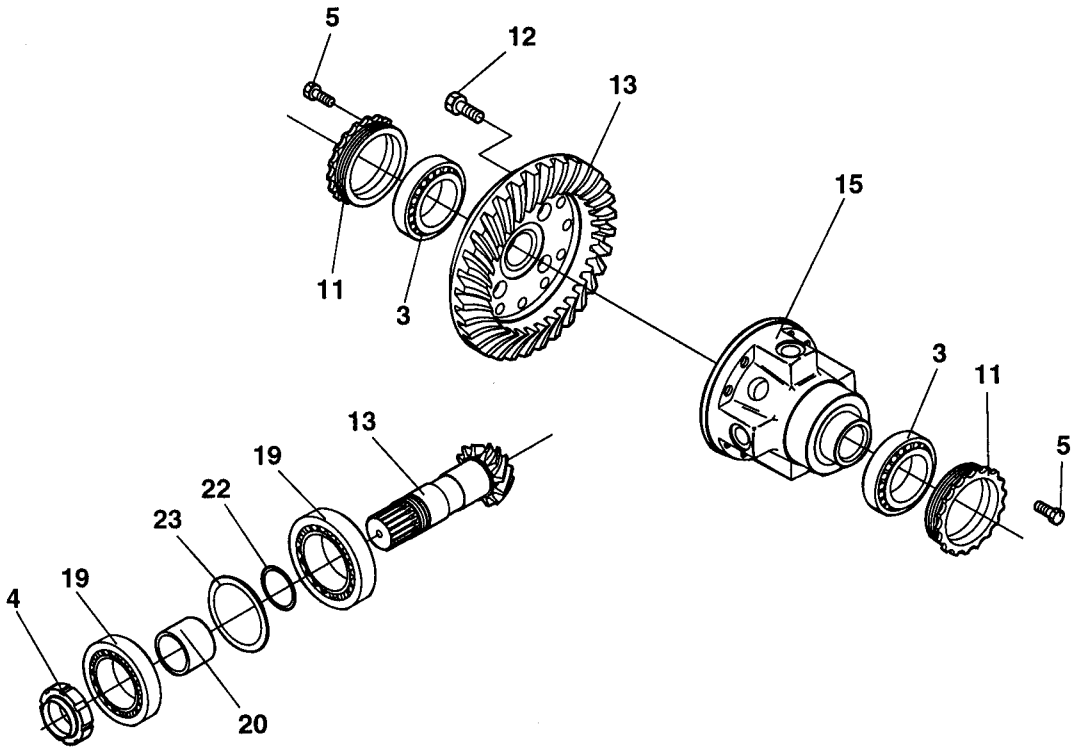

Differential with limited slip

Item	Part No	Rem	Qty	Description		Code
3	4700936023		2	Bearing		
4	4700938988		1	Ring nut		
5	4700938989		2	Screw		
11	4700938990		2	Ring nut		
12	4700938991		12	Screw		
13	4700938992		1	Gear set		
15	4700938994		1	Limited slip disc		
19	4700926116		2	Bearing		
20	4700938995		1	Spacer		
22	4700936053		1	Shim	0.15mm	
	4700936054		1	Shim	0.20mm	
	4700936055		1	Shim	0.40mm	
	4700936056		1	Shim	0.50mm	
23	4700938996		1	Shim	0,20 mm	
	4700938997		1	Shim	0,30 mm	
	4700938998		1	Shim	0,15 mm	
	4700938999		1	Shim	0,10 mm	

Brakes

17491

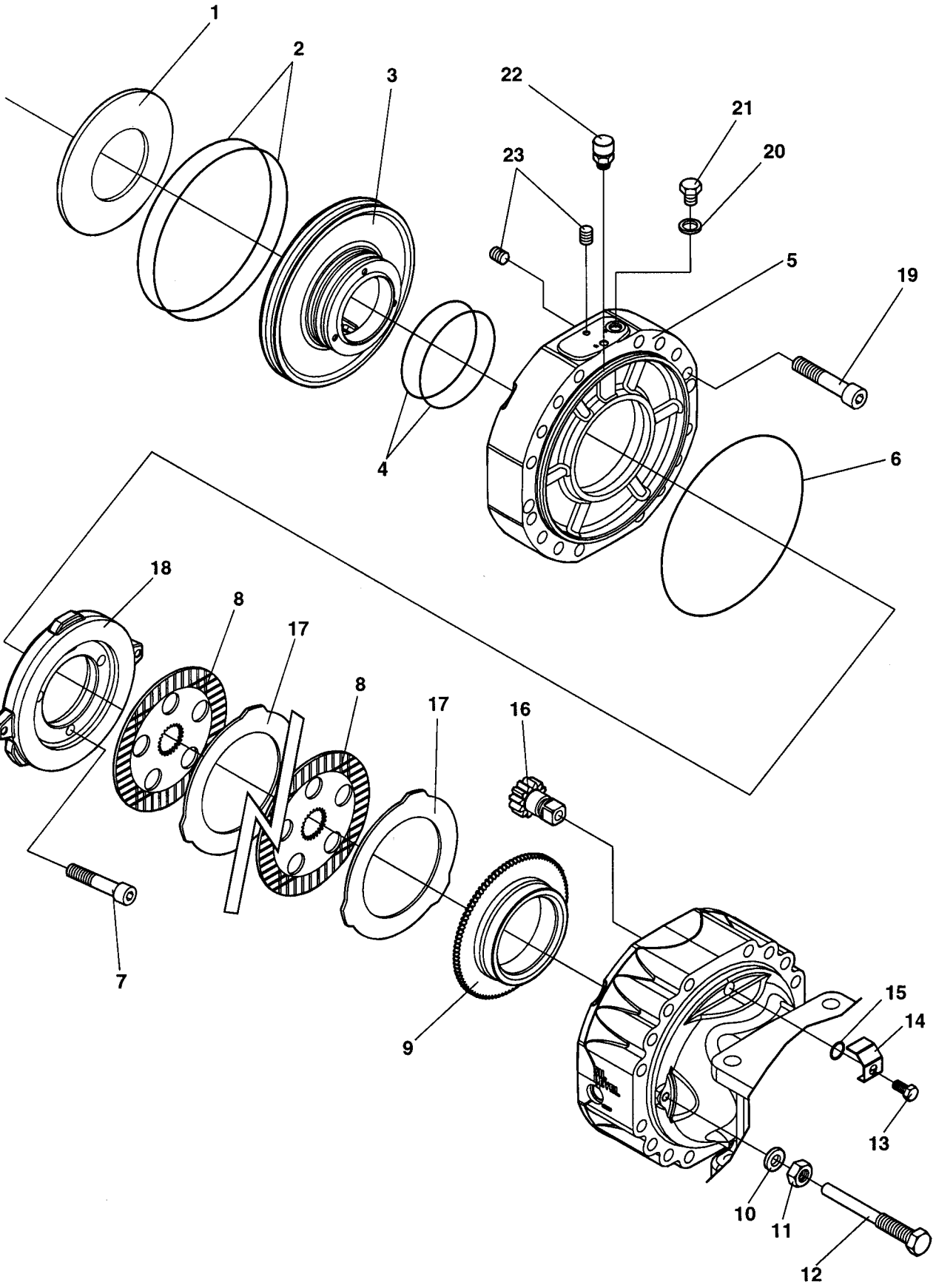

Brakes

Item	Part No	Rem	Qty	Description	Code
1	4700909616		2	Spring	
2	4700939021		4	O-ring	
3	4700939022		2	Piston	
4	4700939023		4	O-ring	
5	4700939024		2	Cover	
6	4700939025		2	O-ring	
7	4700939026		6	Screw	
8	4700939027		8	Brake disc	
9	4700939028		2	Ring	
10	4700939029		4	Lock washer	
11	4700900957		4	Nut	
12	4700939030		4	Adjusting bolt	
13	4700909547		2	Screw	
14	4700939031		2	Plate	
15	4700939032		2	O-ring	
16	4700936097		2	Pinion	
17	4700939033		8	Brake disc	
18	4700939034		2	Disc	
19	4700939035		4	Screw	
20	4700939036		2	Sealing washer	
21	4700939037		2	Screw	
22	4700939038		2	Vent nipple	
23	4700939039		4	Stop screw	

Planet gear

17494

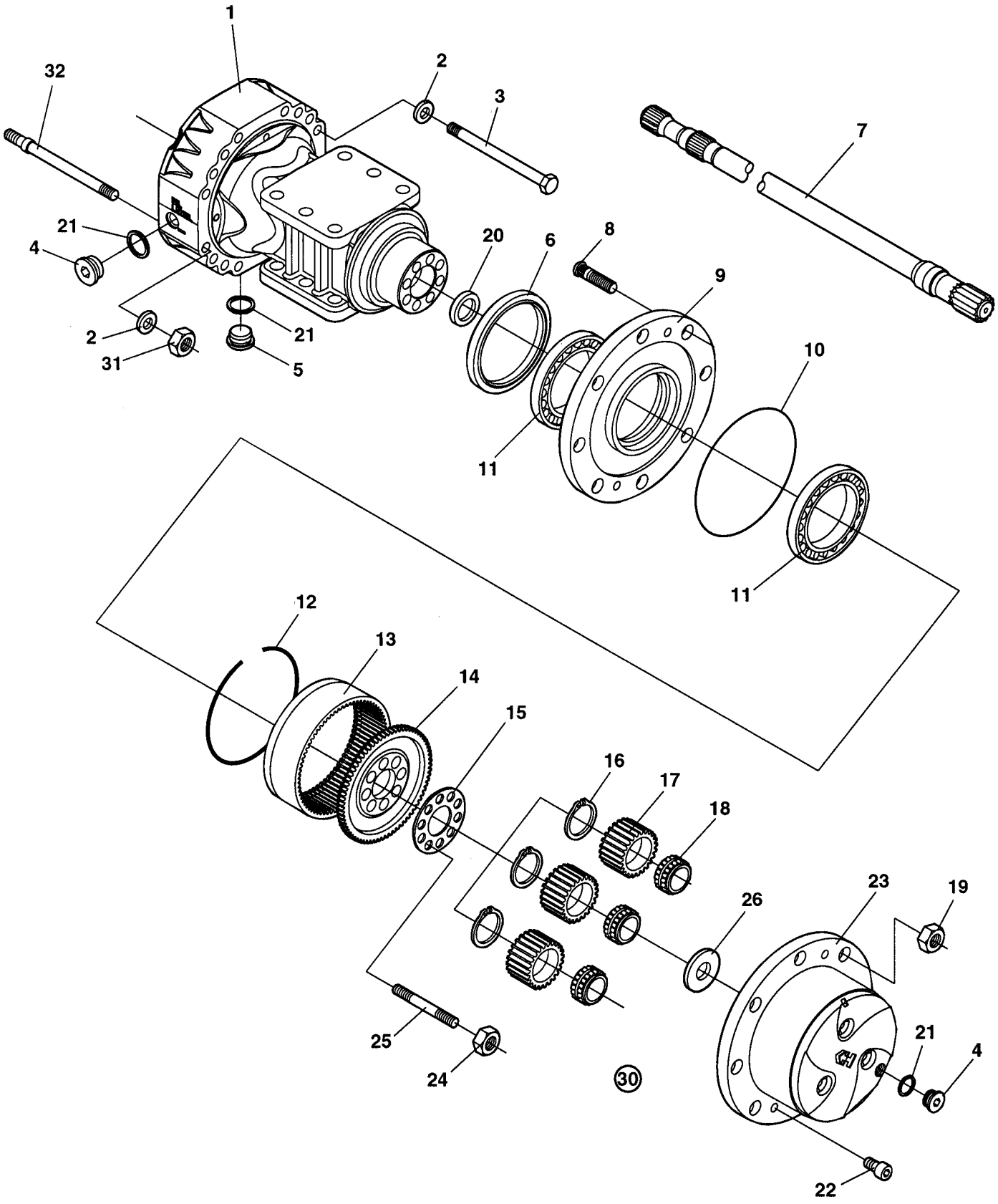

Planet gear

Item	Part No	Rem	Qty	Description	Code
1	4700939002		1	Housing	
2	4700939003		16	Spring washer	
3	4700939004		12	Screw	
4	4700909596		2	Plug	
5	4700939005		1	Magnetic plug	
6	4700939006		1	Seal	
7	4700939007		1	Shaft	
8	4700926781		8	Wheel screw	
9	4700939008		1	Wheel hub	
10	4700936020		1	O-ring	D
11	4700939009		2	Bearing	
		1	1		
		1	1		
		1	1		
15	4700939010		1	Lock plate	
16	4700939011	1	3	Circlip	
17	4700939012	1	3	Planet gear	
18	4700939013	1	3	Bearing	
19	4700901987		8	Wheel nut	
20	4700939014		1	Seal	
21	4700909607		3	Seal	D
22	4700939015		2	Screw	
		1	1		
24	4700939016		8	Nut	
25	4700939017		8	Stud	
		1	1		
30	4700939018		1	Planet gear carrier Cpl.	
31	4700939019		4	Nut	
32	4700939020		4	Stud	

1) Included in ref. 30

Hydraulic system

Item	Part No	Rem	Qty	Description	Code
5				Propulsion system, Front (Page 70)	
10				Propulsion system, Rear (Page 72)	
15	4700384598			Hydraulic motor (Page 80)	
20				Vibration system (Page 82)	
30				Steering system (Page 88)	
40				Brake system (Page 96)	
45				Hydraulic oil tank (Page 90)	
50				Variable rear axle motor Option (Page 98)	
60	4700383855			Rear axle Limited Slip (Page 100)	
70				Central test panel hydraulic Option (Page 110)	

Propulsion system, Front

17493

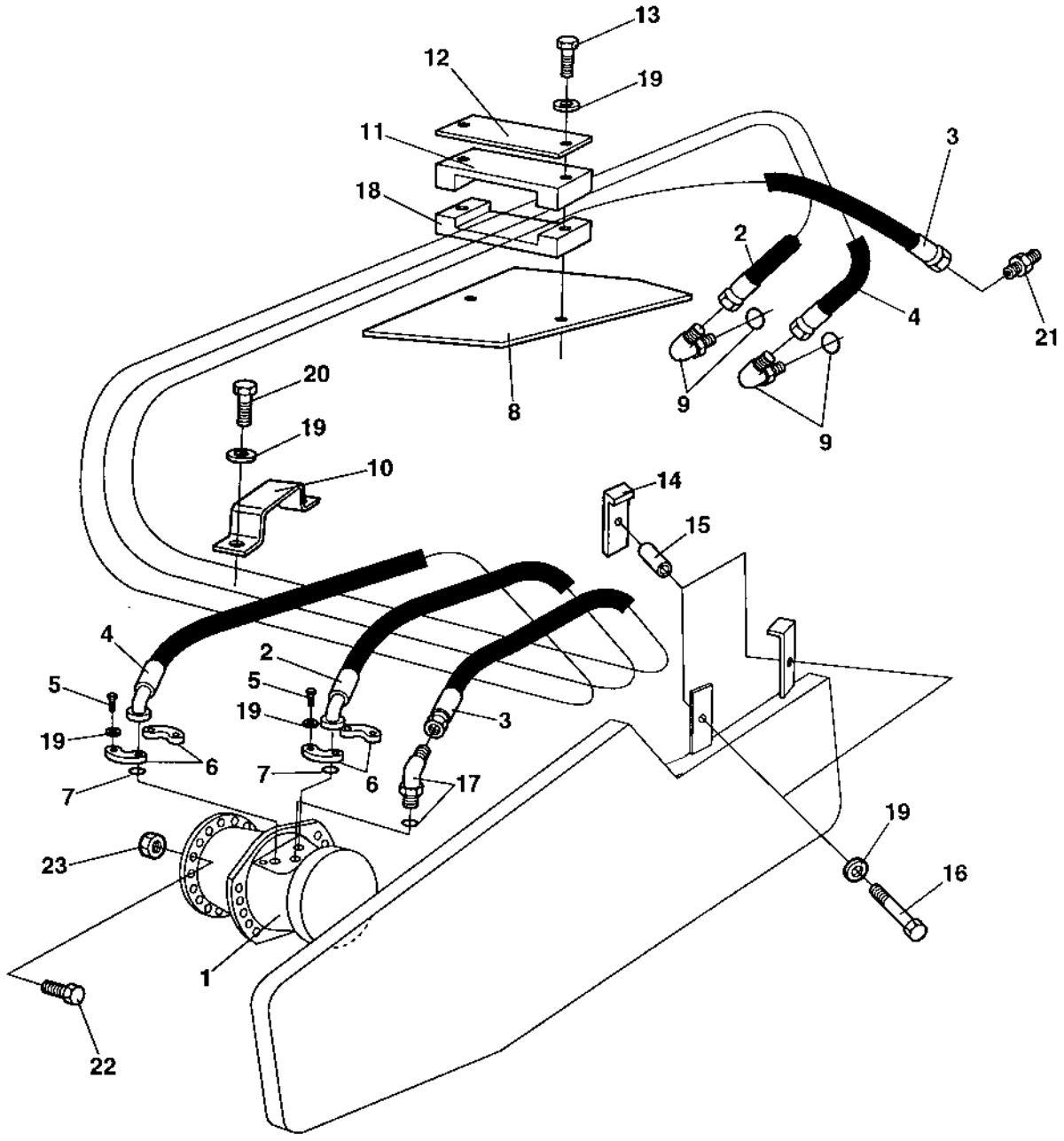

Propulsion system, Front

Item	Part No	Rem	Qty	Description	Code
1	4700384790		1	Propulsion motor	C
2	4700483553		1	Hydraulic hose	
3	4700483133		1	Hydraulic hose	
4	4700483554		1	Hydraulic hose	
5	4700500030		8	Hexagon head screw	C
6	4700929226		4	Flange half	C
7	4700904004		2	O-ring	C
8	4700349211		1	Hose protection	
9	4700791231		2	Elbow 90	D
10	4700373395		1	Hose clamp	
11	4700343732		1	Hose clamp	C
12	4700335914		1	Cover plate	D
13	4700500077		2	Screw	C
14	4700373270		2	Hose clamp	
15	4700373423		2	Spacer	
16	4700500033		2	Screw M10-1,5x60 8,8	
17	4700813500		1	Elbow 45, O-ring	C
18	4700343872		1	Hose clamp	C
19	4700904637		14	Washer	C
20	4700500028		2	Screw	C
21	4700334122		1	Adapter	
22	4700936727		10	Stud M22	
23	4700936728		10	Nut M22	

Propulsion system, Rear

17431

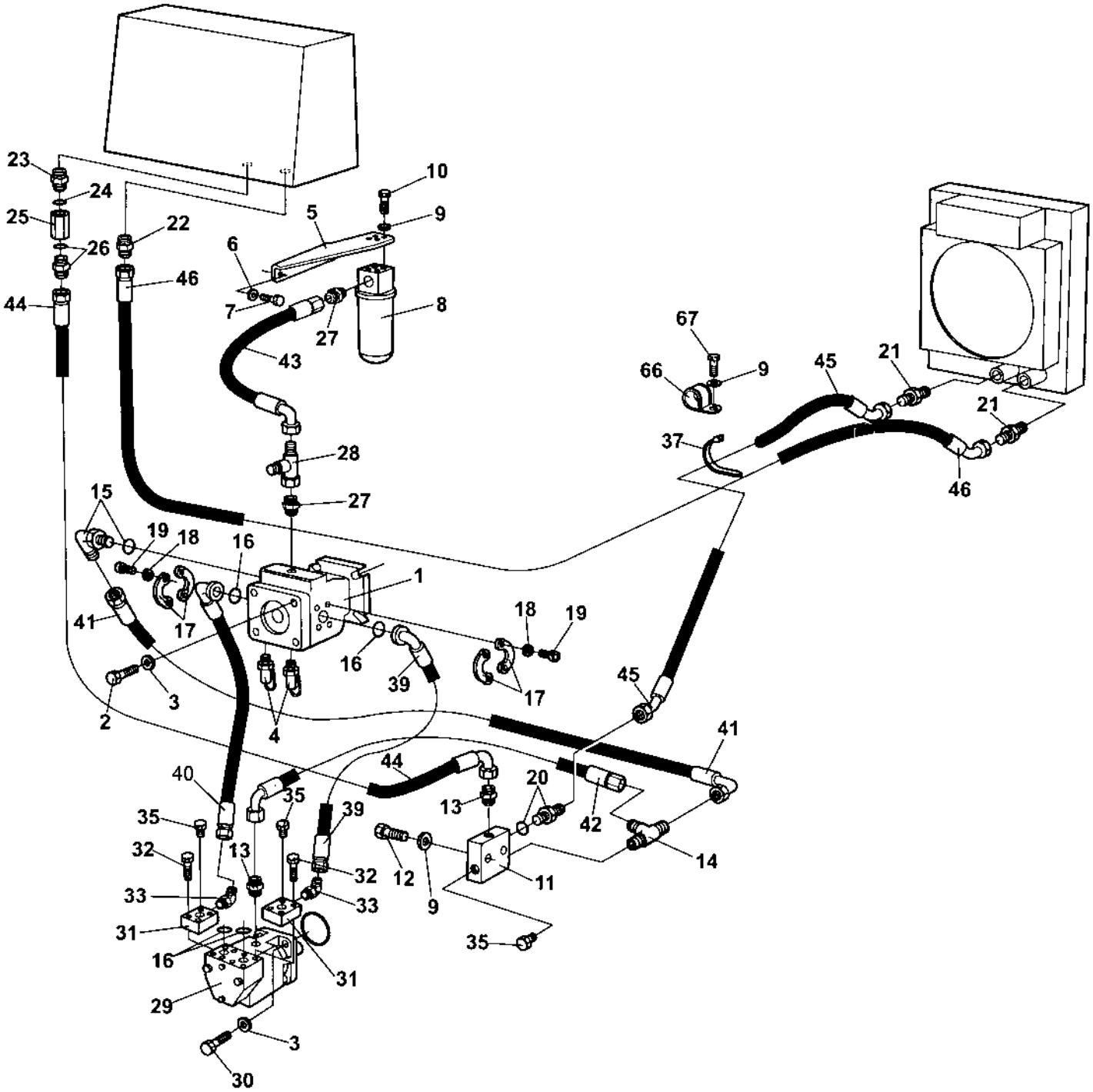

Propulsion system, Rear

Item	Part No	Rem	Qty	Description	Code
1	4700380829		1	Propulsion pump (Page 74)	C
2	4700500046		4	Screw M12x025H	C
3	4700904213		8	Washer	C
4	4700900229		2	Measuring nipple	C
5	4700379482		1	Filter bracket	
6	4700904229		2	Washer 8,4x16x1,5	C
7	4700500021		2	Screw M8-1,25x25 8.8	C
8	4700359550		1	Hydraulic oil filter, cpl Donaldson	
	4700359551		1	. Filter head	A
	4700359552		1	. Cleaning filter element Maximum 50 hours use	A
	4700372229		1	. Hydraulic oil filter element	A
9	4700904230		7	Steel plain washer	C
10	4700500028		4	Screw	C
11	4700345243		1	Connection block	
12	4700500109		2	Screw M10-1,5x65 8,8	C
13	4700334138		2	Adapter	C
14	4700234875		1	Tee-connector o-ring	
15	4700813499		1	Elbow 90, O-ring	
16	4700904005		4	O-ring	
17	4700923384		4	Flange half	
18	4700904638		8	Washer 12x22x2	
19	4700502132		8	Screw UNC 7/16" x 22	
20	4700334140		1	Adapter	
21	4700234958		2	Connector	
22	4700234909		1	Straight connector	
23	4700904282		1	Adapter	
24	4700162008		1	Seal washer	
25	4700374059		1	Check valve	
26	4700923371		1	Adapter	
27	4700334468		2	Adapter	C
28	4700234243		1	T-connector	C
29	4700384598		1	Hydraulic motor (Page 80)	
30	4700500056		4	Screw	C
31	4700384784		2	Flange coupling	
32	4700900806		8	Screw 7/16 - 14UNC X 64 8.8	
33	4700791212		2	Elbow 45	
35				Not used on this model	
37	4700313102			Cable ties	C
39	4700483526		1	Hydraulic hose	
40	4700483526		1	Hydraulic hose	
41	4700482010		1	Hydraulic hose	D
42	4700482182		1	Hydraulic hose	C
43	4700482391		1	Hydraulic hose	
44	4700482182		1	Hydraulic hose	C
45	4700483610		1	Hydraulic hose	
46	4700483673		1	Hydraulic hose	
66	4700904352		1	Clamp	
67	4700500027		1	Screw M10-1,55x22 8.8	C

4700380829 Propulsion pump

18727

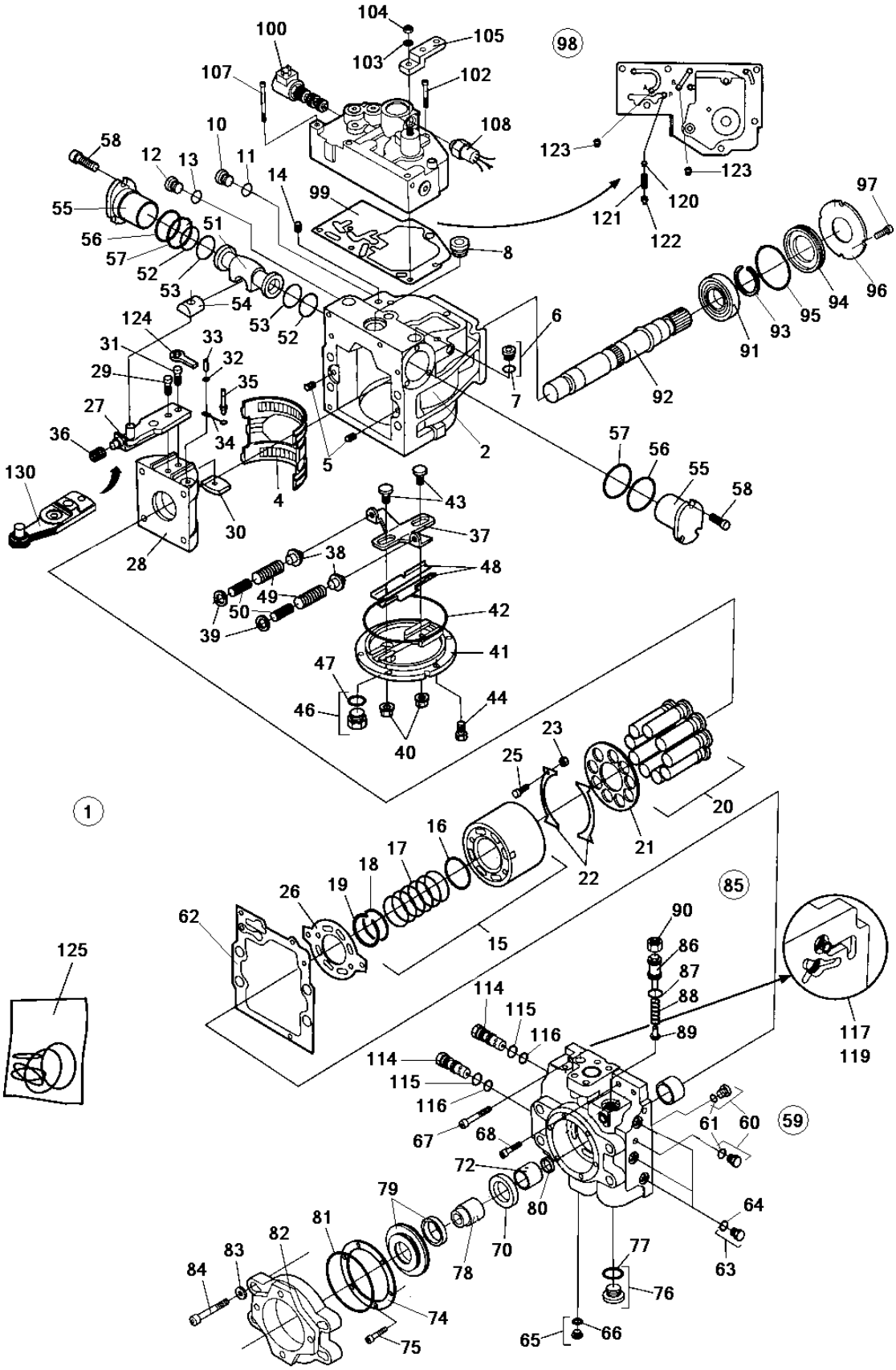

4700380829 Propulsion pump

Item	Part No	Rem	Qty	Description	Code
1			1	Propulsion pump , Cpl	C
2	4700909373		1	. Housing	D
		2	1	Housing	D
4	4700901718		1	. Bearing	B
		2	1	Bearing	B
5	4700813822		2	. Pin	C
6	4700909375		2	. Plug, cpl	C
7	4700909349	1	2	. . O-ring	C
8	4700902928		1	. Plug	C
10	4700908432		1	. Plug	C
11	4700923087	1	1	. . O-ring	C
12	4700908432		1	. Plug	C
13	4700923087	1	1	. . O-ring	C
14	4700901454		1	. Filter element	D
15	4700212353		1	. Rotating group, cpl	C
16	4700909376		1	. . Spacer	C
17	4700909377		1	. . Spring	C
18	4700909378		1	. . Spring retainer	C
19	4700909379		1	. . Retaining ring	C
20	4700909239		9	. Piston, cpl	C
21	4700901721		1	. Pressure plate	D
22	4700901722		2	. Retainer guide	D
23			4	. Spacer	D
25	4700937830		4	. Screw	
26	4700937136		1	. Valve plate	C
27	4700909384		1	. Servo arm, cpl	C
28	4700909385		1	. Swash plate	D
		2	1	Swash plate	D
29	4700909386		1	. Screw	C
		2	1	Screw	C
30	4700909387		1	. Guide	
31	4700909388		1	. Screw	C
32	4700909389		1	. Washer	C
33	4700909390		1	. Pin	C
34			1	. Link	C
35			1	. Pin	C
36			1	. Spring	C
37	4700909395		1	. Lever	D
38	4700909396		2	. Spring retainer	C
39	4700908378		2	. Washer	C
40	4700909398	1	2	. Seal lock nut	B
41	4700937138		1	. Cover	D
		2	1	Cover	D
42	4700909399	1	1	. O-ring	C
43	4700936552		2	. Guide post	D
44	4700936553		6	. Screw	C
46	4700902928		1	. Plug	C
47	4700901453	1	1	. . O-ring	C
48	4700937139		1	. Guide assy.	D
49	4700909402		2	. Spring	C
50	4700909403		2	. Spring	C
51	4700937140		1	. Piston, cpl	C
52	4700909405	1	2	. O-ring	C
53	4700909406	1	2	. Piston ring	C
54			1	. Guide	C
55			2	. Servo sleeve	C

1) Includes in seal kit, item 125
2) Valid with item 130

4700380829 Propulsion pump

18881

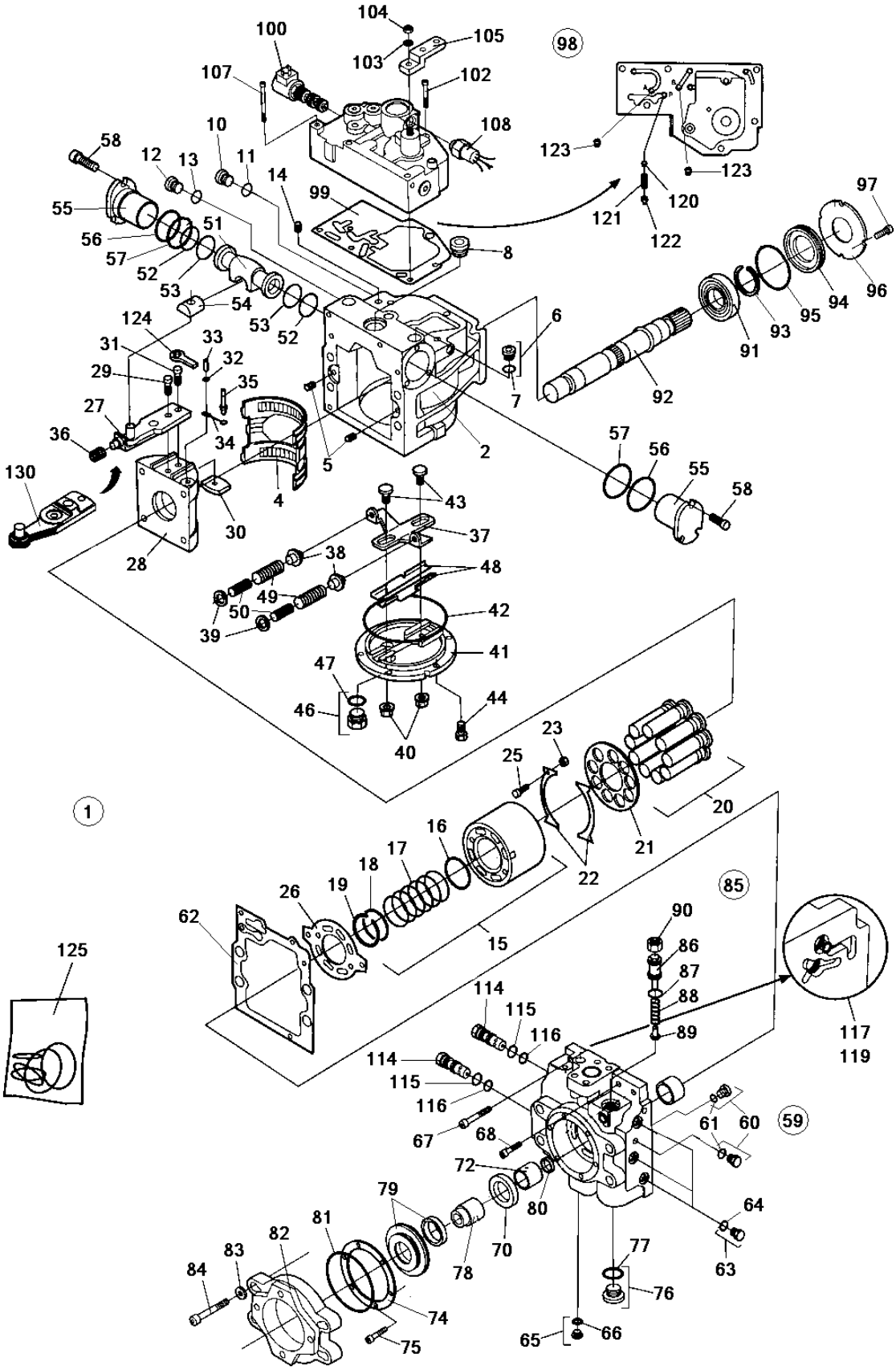

4700380829 Propulsion pump

Item	Part No	Rem	Qty	Description	Code
56	4700909409		2	. O-ring	C
57	4700909410		2	. O-ring	C
58			6	. Screw	C
59	4700937141		1	. End cap, cpl	
60	4700909375		2	. Plug, cpl	C
61	4700909349	1	2	. . O-ring	C
62	4700937142	1	1	. Gasket	
63	4700358388		3	. Plug	
64	4700923087	1	3	. . O-ring	C
65	4700908432		1	. Plug	C
66	4700923087	1	1	. . O-ring	C
67	4700937143		1	. Screw	
68			1	. Screw	
70	4700937145		1	. Spacer	
72			1	. Shaft	
74	4700935857		1	. Retaining plate	
75	4700909411		6	. Screw	C
76	4700936567		1	. Plug, cpl	
77	4700936568	1	1	. . O-ring	
78	4700937149		1	. Coupling sleeve	
79	4700908217		1	. Cover assembly	
80	4700903052	1	1	. Bushing	
81	4700909399	1	1	. O-ring	C
82			1	. Adapter	C
83			4	. Washer	C
84	4700937153		4	. Screw	
85	4700950565		1	. Pressure relief valve, cpl	
86		A	1	. . Screw	
87	4700926658	1	1	. . O-ring	C
88			1	. . Spring	C
89			1	. . Valve cone	C
90			1	. . Nut	C
91	4700901725		1	. Bearing	B
92	4700937159		1	. Shaft	
93	4700901727		1	. Snap ring	C
94	4700212346		1	. Shaft seal	B
		2	1	Shaft seal	B
95	4700909257	1	1	. O-ring	C
96	4700901728		1	. Carrier seal	C
97	4700908773		3	. Screw	C
98	4700938251		1	. Control valve, cpl	
99	4700938755	1	1	. . Gasket	
100	4700938252		1	. . Solenoid valve	
102			1	. . . Screw	
103	4700909428		1	. . Washer	C
104	4700909429		1	. . O-ring	C
105	4700909432		1	. . Control lever	D
107	4700937857		5	. . Screw	
108	4700938253		1	. . Neutral start switch	
114	4700945951		2	. Valve	D
115	4700907163	1	2	. O-ring	
116	4700936579	1	2	. O-ring	C
117	4700901475		2	. Valve	D
119	4700813828		2	. Plug	D
120	4700901482		1	. Orifice	D
121	4700909436		1	. Spring	C

1) Includes in seal kit, item 125
2) Valid with item 130
A) Not sold seperately. Replaced by PN 4700936583.

4700380829 Propulsion pump

18881

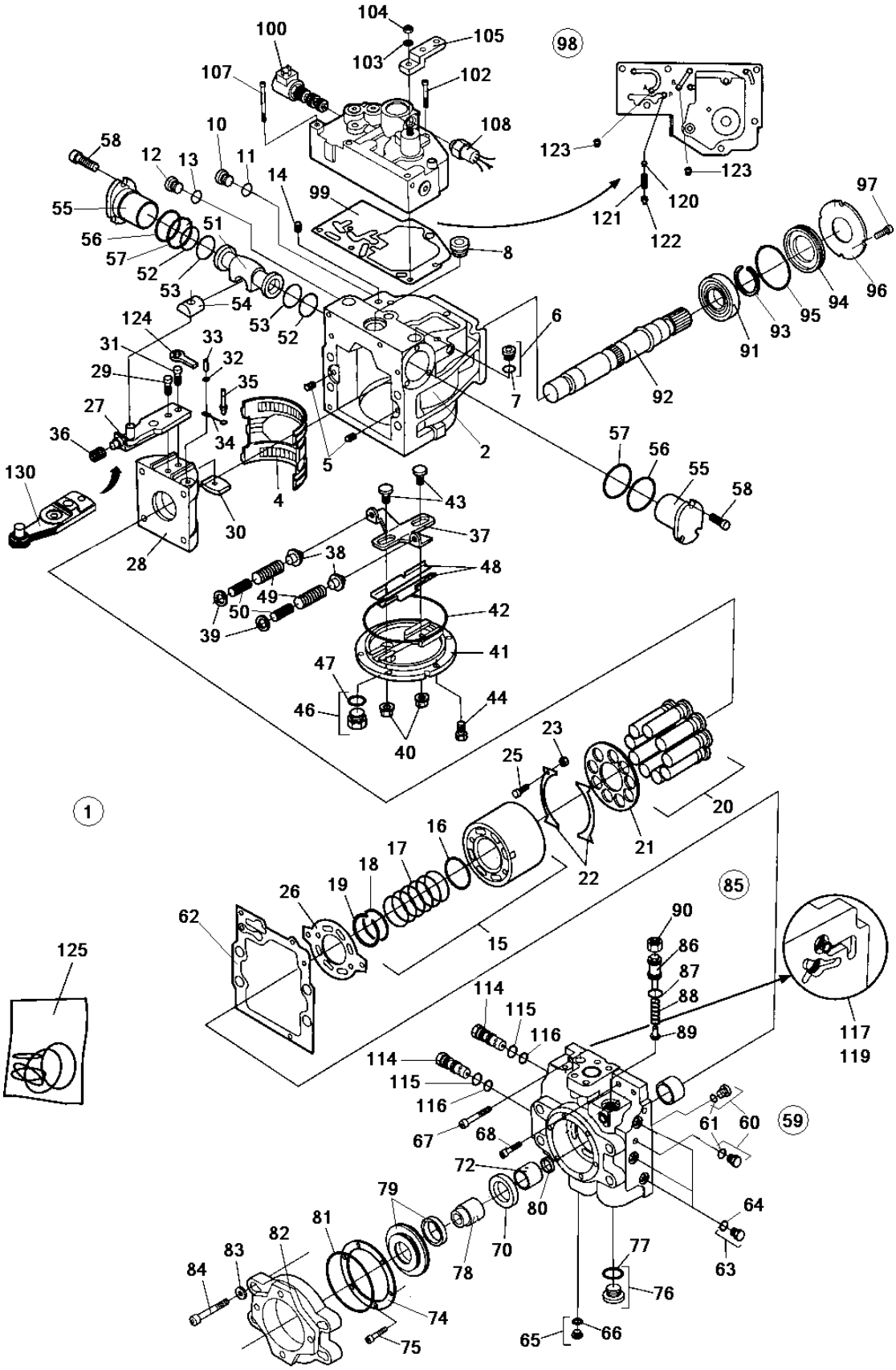

4700380829 Propulsion pump

Item	Part No	Rem	Qty	Description	Code
122	4700908448		1	. Spring retainer	C
123	4700908439		2	. Orifice 0.8M6x8	D
124			1	. Link	D
125	4700945906		1	Seal kit	D
130			1	Servo arm	D

4700384598 Hydraulic motor

18881

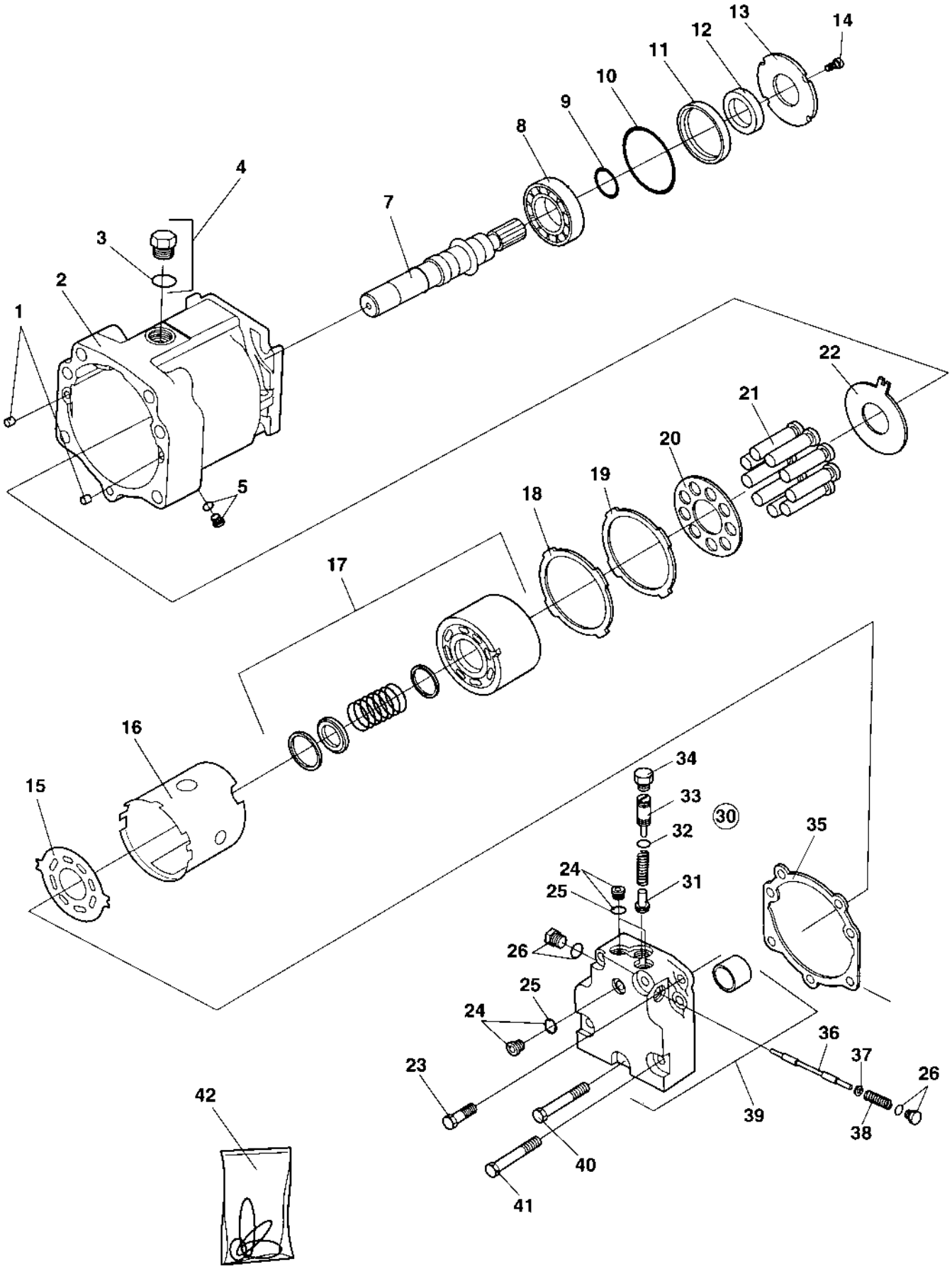

4700384598 Hydraulic motor

Item	Part No	Rem	Qty	Description	Code
1	4700813822		2	Pin	C
2	4700935618		1	Housing	
3	4700901453	A	2	O-ring	C
4	4700902928		2	Plug	C
5	4700908432		1	Plug	C
7	4700939242		1	Shaft	
8	4700901465		1	Bearing	
9	4700901467		1	Ring	
10	4700935633	A	1	O-ring	D
11	4700903575		1	Seal carrier	
12	4700935632	A	1	Seal	D
13	4700935634		1	Retaining plate	
14	4700908773		3	Screw	C
15	4700935626		1	Valve plate	
16	4700935625		1	Holder	
17	4700901455		1	Cylinder block, cpl	
18	4700935624		1	Shim	
19	4700935623		1	Retainer guide	
20	4700903571		1	Pressure plate	D
21	4700903570		9	Piston	D
22	4700935627		1	Thrust plate	
23	4700909253		2	Screw	
24	4700358388		3	Plug	
25		A	3	O-ring	
26	4700935741		2	Plug, cpl	
30	4700939238		1	Valve, cpl	
31	4700939240		1	. Spring collar	
32		A	2	. O-ring	
33	4700939239		1	. Adapter	
34	4700939241		1	. Plug	
35	4700935629	A	1	Gasket	D
36	4700935533		1	Spool	
37	4700939236		2	Spring washer	
38	4700939237		2	Spring	
39	4700937280		1	End cap, cpl	
40	4700935630		1	Screw	
41	4700909252		4	Screw	
42	4700935617		1	Seal kit	D

A) Included in item 42

Vibration system

17501

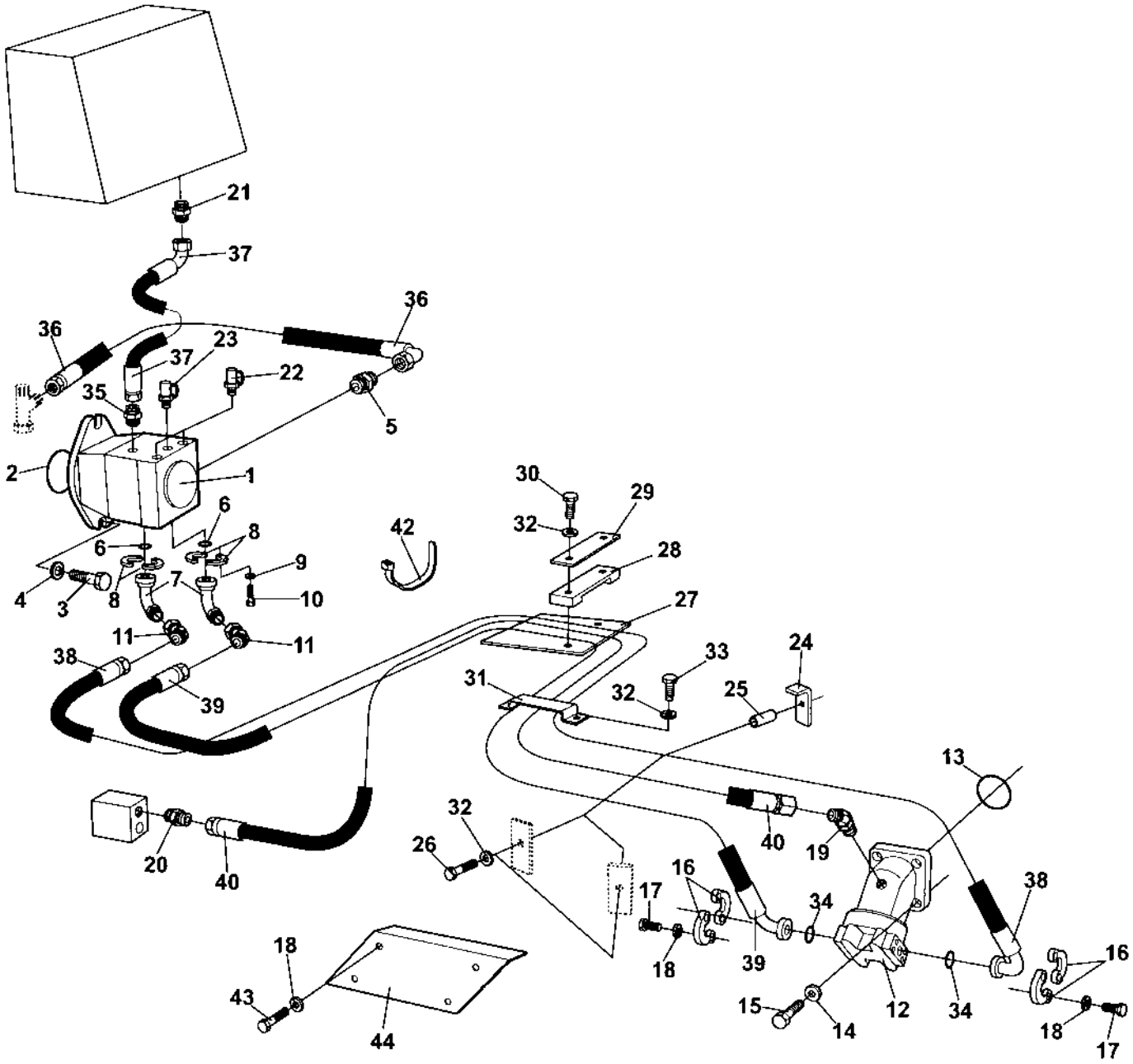

Vibration system

Item	Part No	Rem	Qty	Description	Code
1	4700384751		1	Vibration pump (Page 84)	C
2	4700160279		1	O-ring 101,27x2,62	C
	4700160234		1	O-ring 94,9x2,62	
3	4700502059		2	Screw 1/2"-13UNCx1.1/2" 8.8	
4	4700904703		2	Washer	C
5	4700234382		1	Adapter	
6	4700904773		2	O-ring	
7	4700904767		2	Flange adapter	
8	4700929226		4	Flange half	C
9	4700904637		8	Washer	C
10	4700500030		8	Hexagon head screw	C
11	4700904781		2	Adapter	C
12	4700380144		1	Hydraulic motor, vibration (Page 86)	C
13	4700160157		1	O-ring	D
14	4700904231		4	Steel plain washer	C
15	4700500194		4	Screw	C
16	4700900430		4	Flange half	C
17	4700502019		8	Screw	
18	4700904229		12	Washer 8,4x16x1,5	C
19	4700813500		1	Elbow 45, O-ring	C
20	4700334122		1	Adapter	
21	4700334205		1	Straight connector	
22	4700901157		2	Measuring nipple	C
23	4700373774		1	Measuring nipple	D
24	4700373270		2	Hose clamp	
25	4700373507		2	Spacer	
26	4700500091		2	Screw	C
27	4700349211		1	Hose protection	
28	4700343732		1	Hose clamp	C
29	4700335914		1	Cover plate	D
30	4700500033		2	Screw M10-1,5x60 8,8	
31	4700373396		1	Hose clamp	
32	4700904230		6	Steel plain washer	C
33	4700500028		2	Screw	C
34	4700904774		2	O-ring	
35	4700903925		1	Connector	
36	4700483131		1	Hydraulic hose	
37	4700482727		1	Hydraulic hose	
38	4700484131		1	Hydraulic hose	
39	4700483350		1	Hydraulic hose	C
40	4700482766		1	Hydraulic hose	C
42	4700313102			Cable ties	C
43	4700500019		4	Screw M8x16H 8.8 A2K	C
44	4700373134		1	Cover	

4700384751 Vibration pump

18712

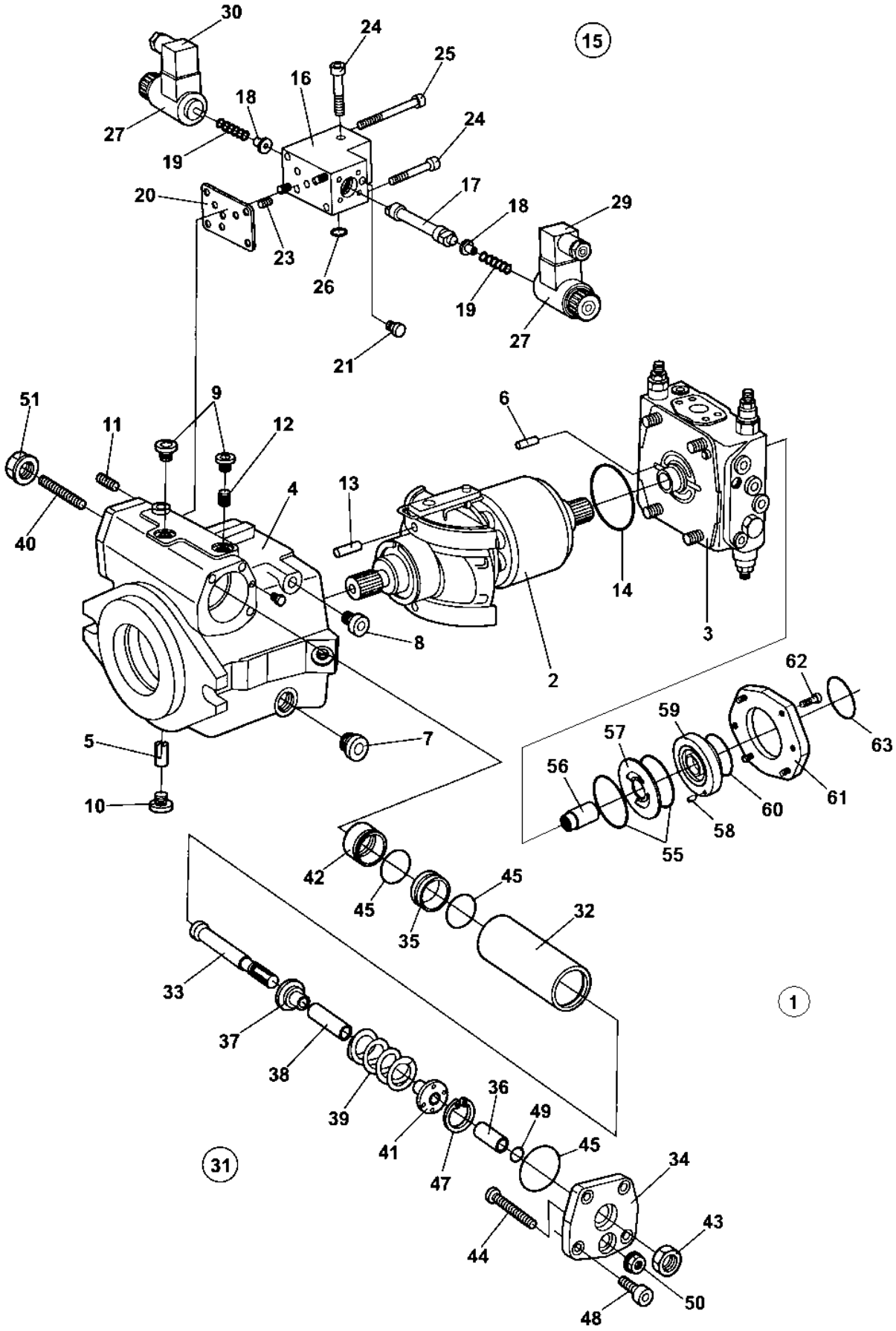

4700384751 Vibration pump

Item	Part No	Rem	Qty	Description	Code
1			1	Hydraulic motor, vibration	
	4700940674		1	. Seal kit	
2			1	. Rotary group, cpl	
3	4700937211		1	. Valve block, cpl	
4			1	. Housing	
5	4700935158		1	. Pin	
6	4700937215		1	. Pin	
7	4700935219	1	1	. Plug	
8	4700902724	1	1	. Plug	
9	4700936803	1	3	. Plug	
10	4700902624	1	1	. Screw	
11	4700909514		1	. Pin	
12	4700936308		2	. Orifice	
13	4700902792		2	. Pin	
14	4700935159	1	1	. O-ring	
15	4700940506		1	. Control valve, cpl	
16			1	. . Housing	
17			1	. . Piston	
18	4700945776		2	. . Spring collar	
19	4700936686		2	. . Spring	
20		1	1	. . Gasket	
21			2	. . Pin	
23	4700936307		1	. . Double break-off pin	D
24	4700927358		3	. . Screw	
25	4700908383		2	. . Screw	
26		1	1	. . O-ring	
27	4700940505		2	. . Solenoid	
29			1	. . Socket	
30			1	. . Socket	
31			1	. Hydraulic control, cpl	
32			1	. . Piston	
33	4700937218		1	. . Rod	
34	4700937219		1	. . Cover	
35			1	. . Guide ring	
36			1	. . Ring	
37			1	. . Spring collar	
38			1	. . Bush	
39	4700937232		1	. . Spring	
40	4700937233		1	. . Pin	
41			1	. . Spring collar	
42			1	. . Guide ring	
43	4700937236		1	. . Nut	
44	4700937237		1	. . Pin	
45	4700902642	1	3	. . O-ring	D
47			1	. . Retaining ring	D
48	4700902688		4	. . Screw	
49	4700936394	1	1	. . O-ring	
50	4700936421	1	1	. . Seal lock nut	
51	4700936393	1	1	. . Seal lock nut	
55	4700935192	1	2	. O-ring	
56			1	. Coupling	
57	4700935187		1	. Wear plate	
58	4700935190		1	. Cylindrical pin	
59		1	1	. Seal ring	
60		1	1	. O-ring	
61			1	. Flange	
62			4	. Screw	
63	4700939168	1	1	. O-ring	

1) Included in seal kit, see item 1.

4700380144 Hydraulic motor, vibration

18915

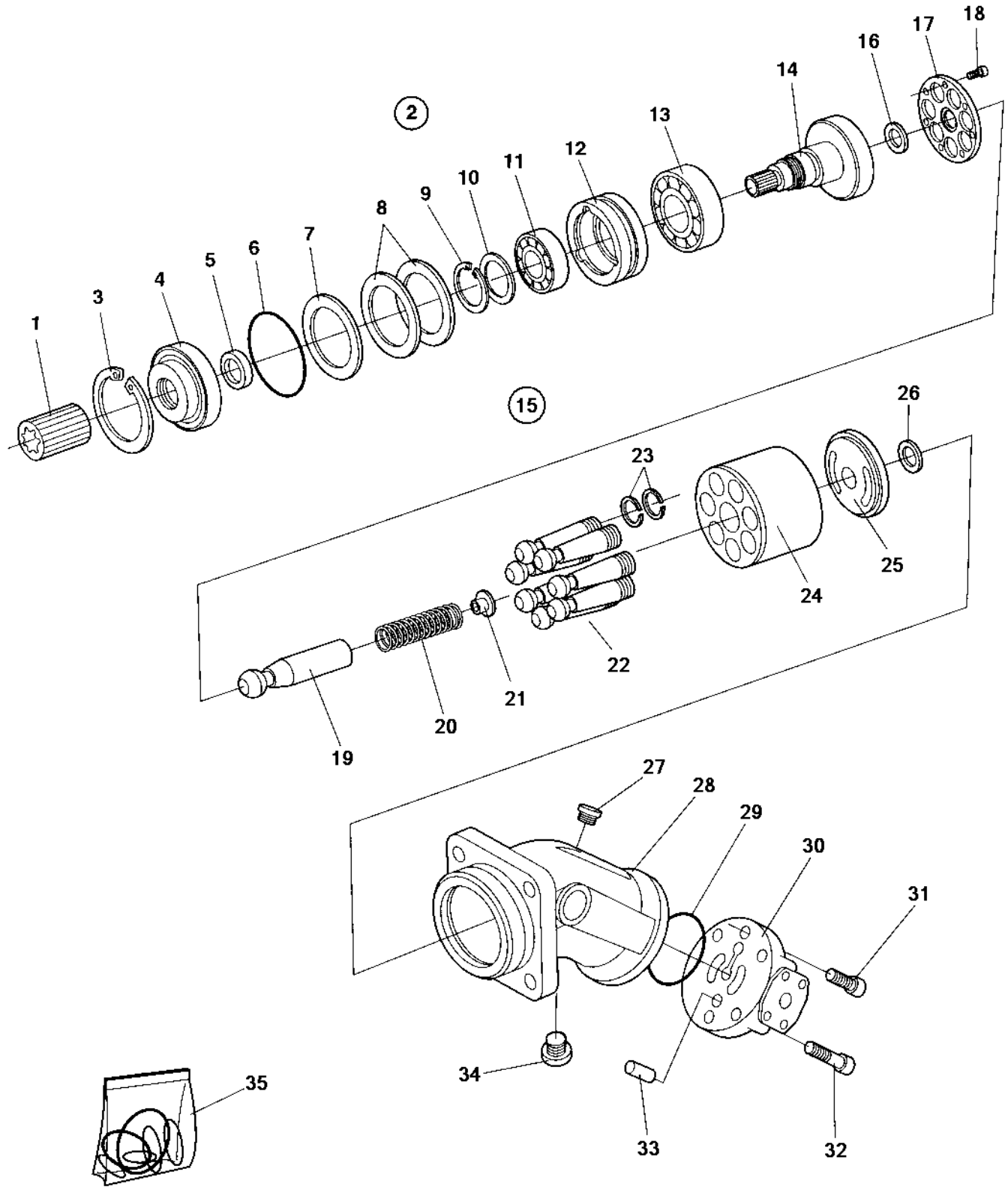

4700380144 Hydraulic motor, vibration

Item	Part No	Rem	Qty	Description	Code
			1	Hydraulic motor, vibration	
1	4700340863		1	. Splined sleeve	D
2	4700380077		1	. Hydraulic motor, vibration	
3	4700901387		1	. . Snap ring	
4	4700937261		1	. . Cover	
5	4700937264	1	1	. . Seal ring	
6	4700937265	1	1	. . O-ring	
7	4700901390		1	. . Shim T=0,3 mm	
8	4700901389		2	. . Shim T=0,1 mm	
9	4700938042		1	. . Retaining ring	
10	4700938041		1	. . Back-up plate	
11	4700901386		1	. . Bearing	
12	4700937260		1	. . Bearing ring	
13	4700901385		1	. . Bearing	
14	4700938040		1	. . Shaft	
15			1	. Rotary group, hydr.section	
16			1	. . Washer	
17			1	. . Retaining plate	
18			7	. . Screw	
19			1	. . Pin	
20			1	. . Spring	
21			1	. . Spring collar	
22			7	. . Piston	
			1	. . . Piston	
23			2	. . . Sealing ring	
24			1	. . Cylinder	
25			1	. . Pressure plate	
26			1	. . Washer	
27	4700937995		1	. . Screw	
28	4700937256		1	. . Housing	
29	4700937258	1	1	. . O-ring	
30	4700937257		1	. . Plate	
31	4700902655		2	. . Screw	
32	4700927350		4	. . Screw	
33	4700937993		1	. . Pin	
34	4700937259	1	1	. . Screw	
35	4700937673		1	. Seal kit	

1) Included in seal kit, item 34

Steering system

16978

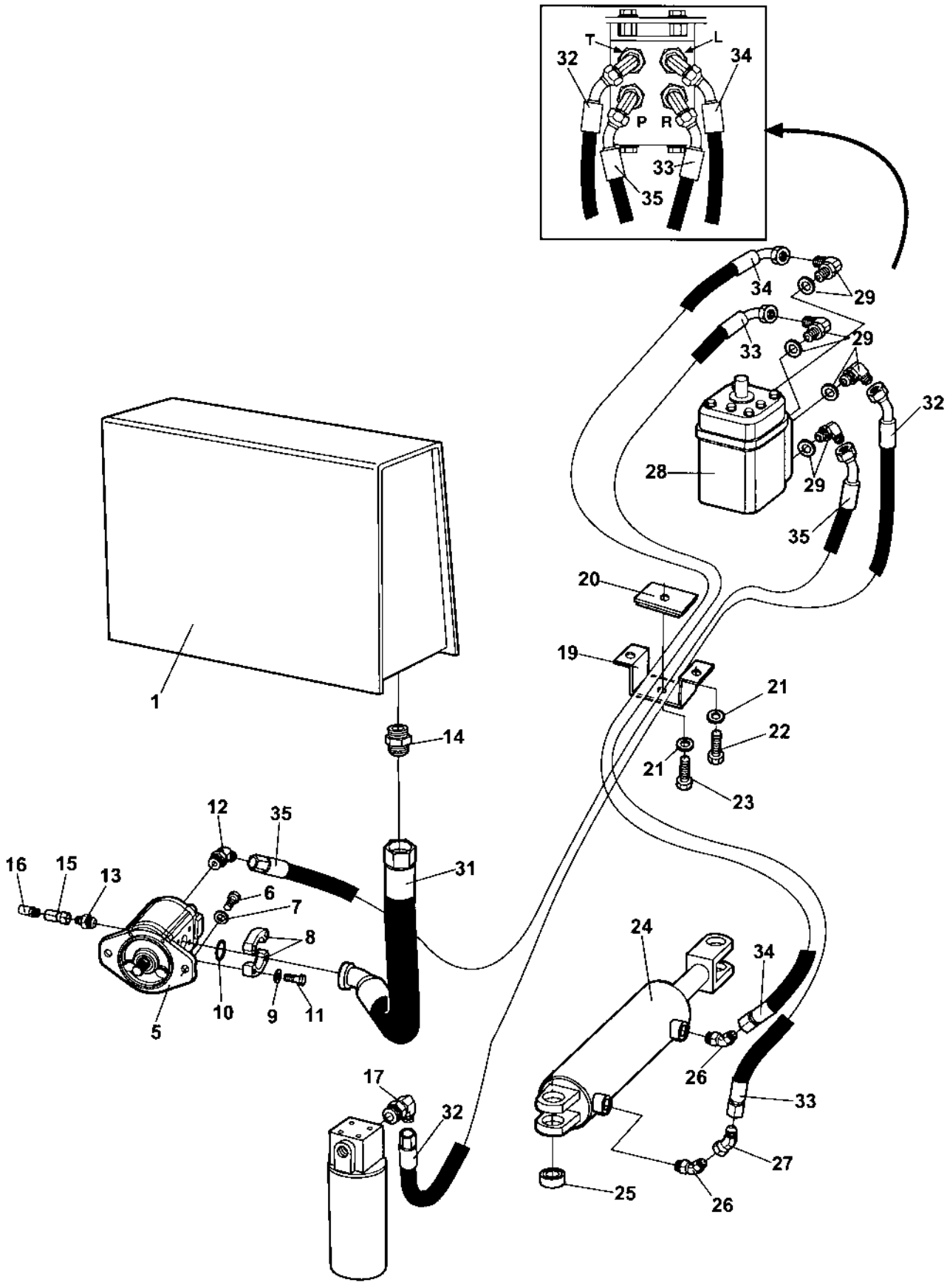

Steering system

Item	Part No	Rem	Qty	Description	Code
1				Hydraulic oil tank (Page 90)	
5	4700394903		1	Steering pump	
6	4700500046		2	Screw M12x025H	C
7	4700904231		2	Steel plain washer	C
8	4700232097		2	Flange half	C
9	4700904637		4	Washer	C
10	4700904005		1	O-ring	
11	4700500029		4	Hexagon head screw	C
12	4700801244		1	Adapter	
13	4700334199		1	Straight o-ring connector	C
14	4700234626		1	Adapter	C
15	4700338304		1	Connector	C
16	4700910161		1	Measuring nipple	C
17	4700929123		1	Elbow 90, O-ring	C
19	4700372513		1	Hose clamp	
20	4700372514		1	Hose clamp	
21	4700904229		3	Washer 8,4x16x1,5	C
22	4700500019		2	Screw M8x16H 8.8 A2K	C
23	4700904241		1	Screw	C
24	4700392002		1	Steering cylinder (Page 92)	C
25	4700379630		2	Radial spherical plain bearing	
26	4700813500		2	Elbow 45, O-ring	C
27	4700234662		1	Elbow 45	C
28	4700385957		1	Pilot valve (Page 94)	
29	4700813444		4	Elbow 90, O-ring	C
31	4700483528		1	Hydraulic hose	C
32	4700483498		1	Hydraulic hose	
33	4700482898		1	Hydraulic hose	
34	4700483505		1	Hydraulic hose	
35	4700482889		1	Hydraulic hose	

Hydraulic oil tank

18728

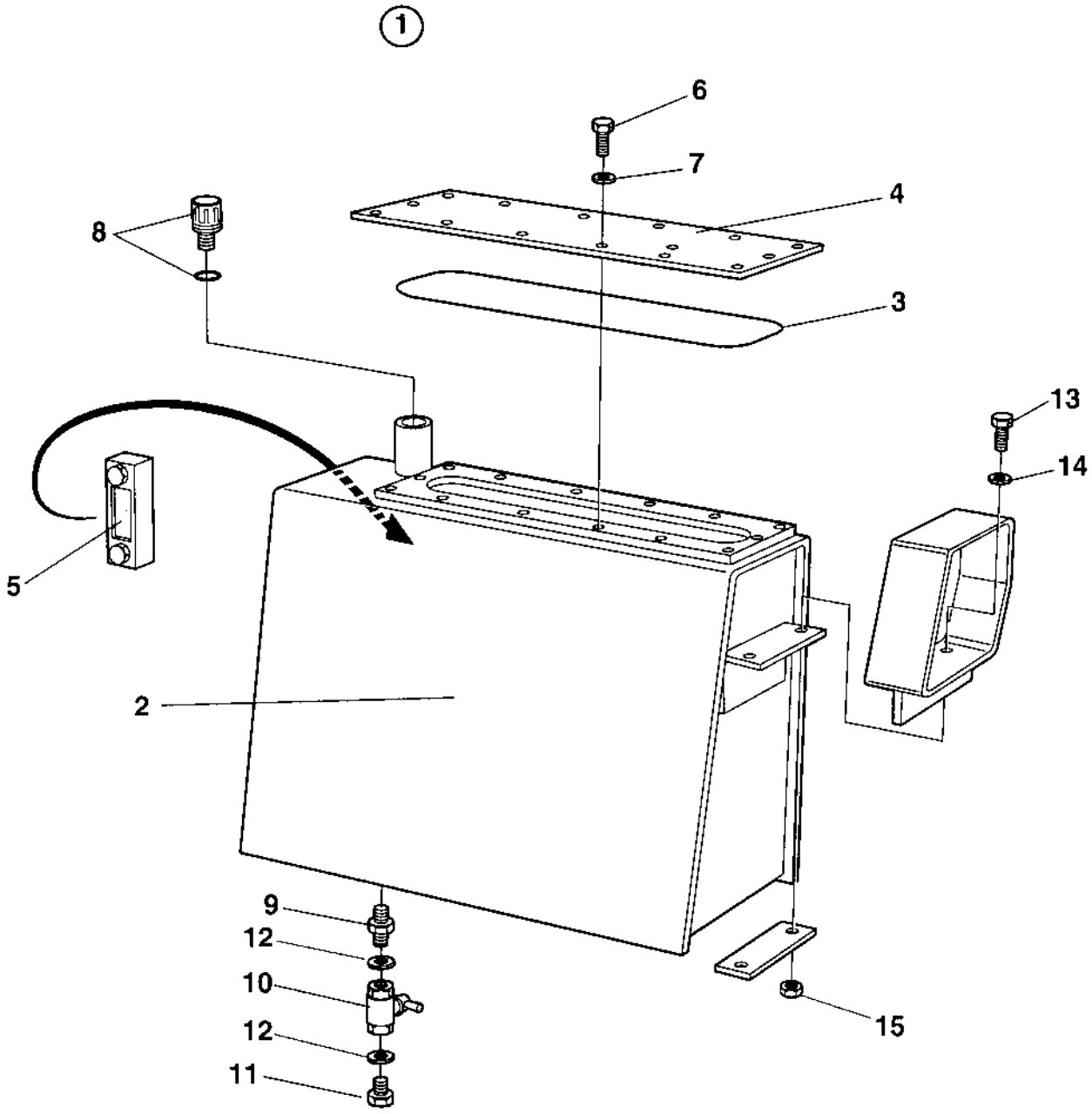

Hydraulic oil tank

Item	Part No	Rem	Qty	Description	Code
1	4700372044		1	Hydraulic oil tank, cpl	
2	4700372029		1	. Hydraulic oil tank	
3	4700349880		1	. O-ring	C
4	4700349879		1	. Cover	
5	4700989151		1	. Oil level glass	C
6	4700500019		14	. Screw M8x16H 8.8 A2K	C
7	4700904229		14	. Washer 8,4x16x1,5	C
8	4700357138		1	. Ventilating filter	A
9	4700791119		1	. Adapter G3/4	
10	4700233304		1	. Ball valve	
11	4700232039		1	. Plug G3/4	
12	4700791120		2	. Sealing washer	
13	4700500192		4	Screw M10x80	C
14	4700904567		4	Washer 10,5x28x6 HB305	C
16	4700570006		4	Nut	C

4700392002 Steering cylinder

16054-1

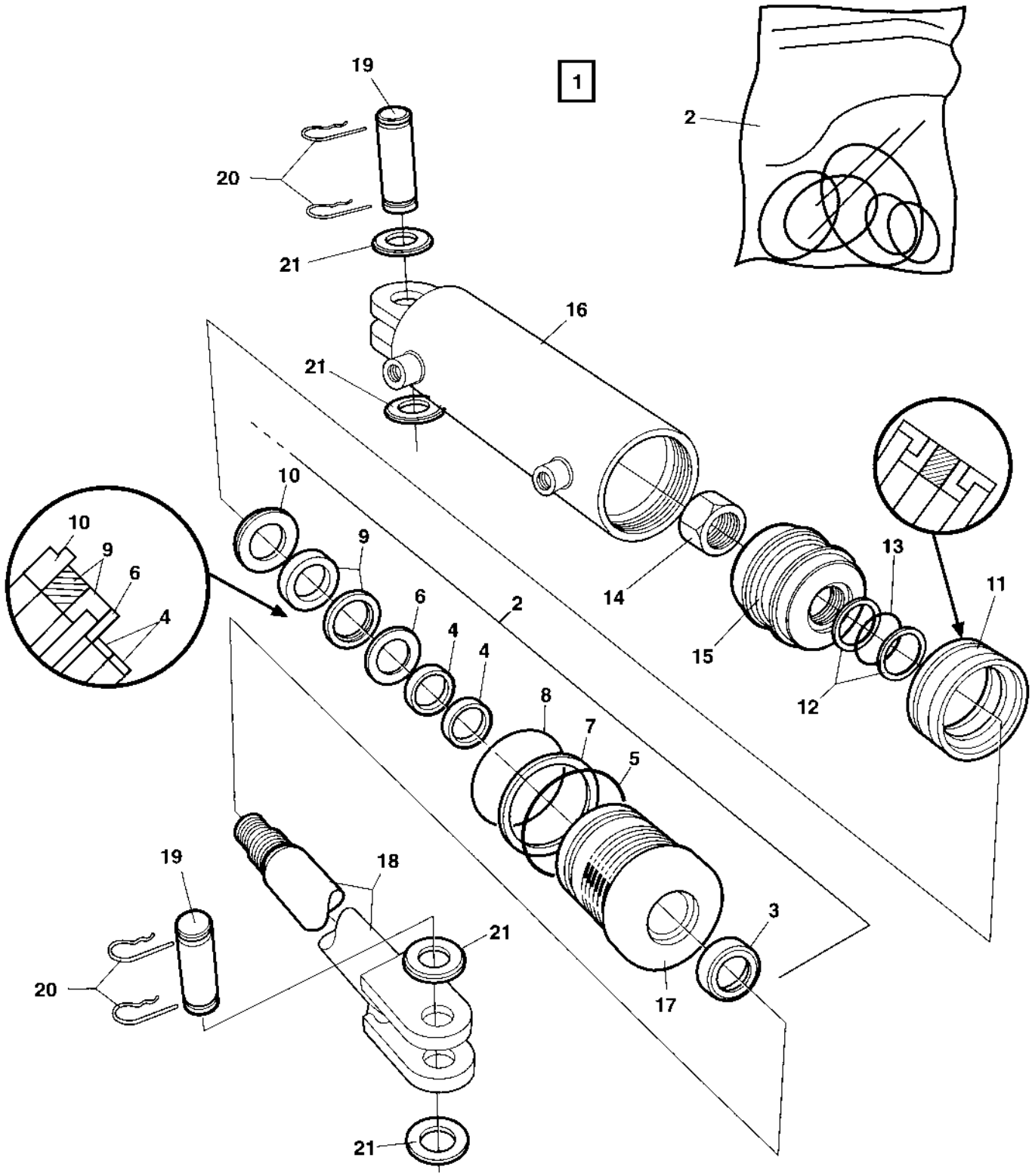

4700392002 Steering cylinder

Item	Part No	Rem	Qty	Description	Code
1	4700392002		1	Steering cylinder (Page 92)	C
2	4700392100		1	. Seal kit	B
3			1	. . Seal	B
4			2	. . Seal	B
5			1	. . O-ring	B
6			1	. . Back-up ring	B
7			1	. . Back-up ring	B
8			1	. . O-ring	B
9			1	. . Seal	B
10			1	. . Retaining ring	B
11			1	. . Seal	B
12			2	. . Back-up ring	B
13			1	. . O-ring	B
14			1	. . Lock nut	B
15			1	. Piston block	B
16			1	. Cylinder	B
17			1	. Steering	B
18	4700392105		1	. Piston rod	C
19	4700392103		2	. Shaft	C
20	4700635061		4	. Hair clip	C
21	4700600016		4	. Washer 26x45x4	C

4700385957 Pilot valve

16490

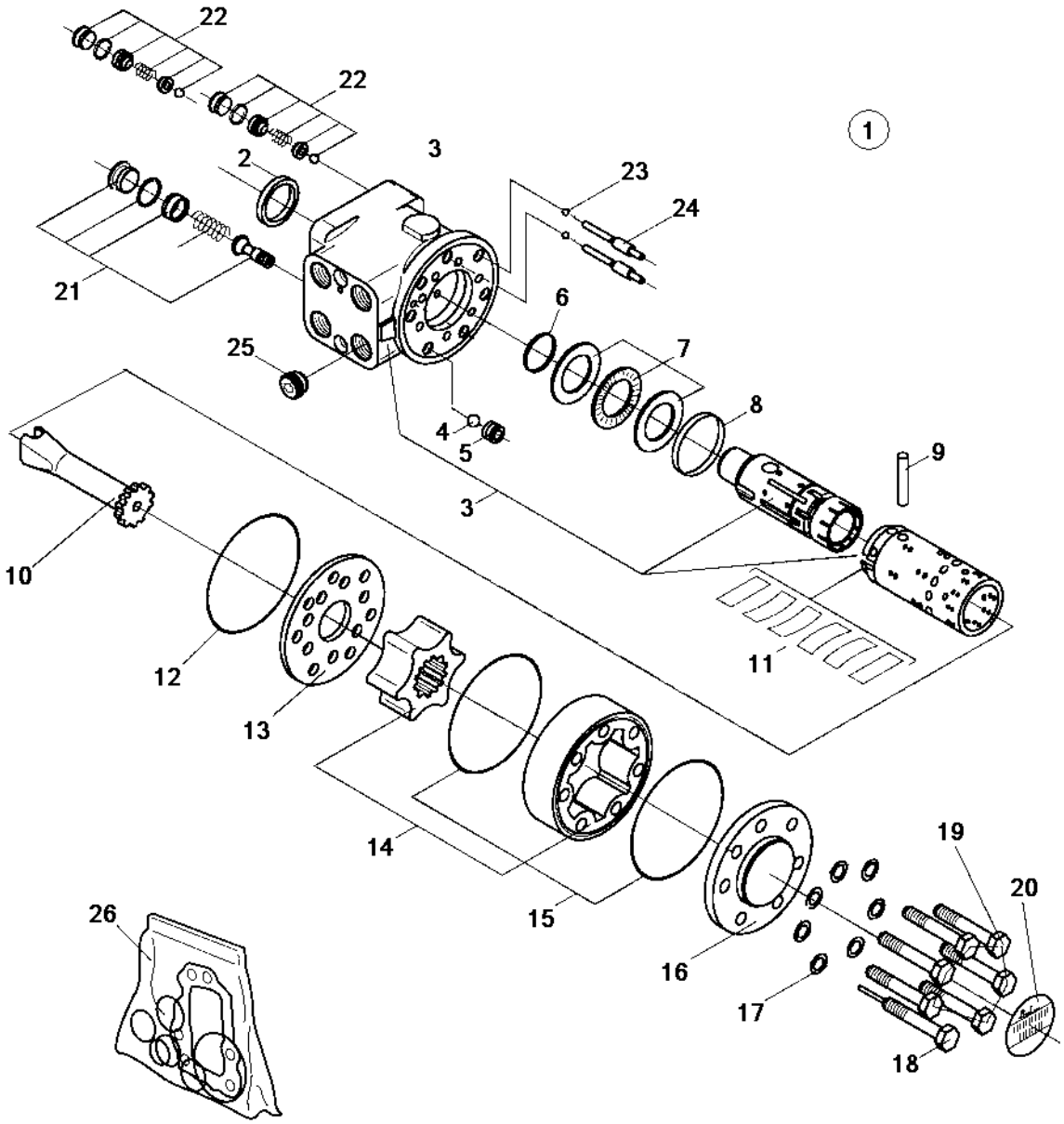

4700385957 Pilot valve

Item	Part No	Rem	Qty	Description	Code
1			1	Pilot valve, cpl	C
2		A	1	. Seal ring	C
3			1	. Housing, seats and spool	C
4			1	. Ball	C
5			1	. Threaded bushing	C
6		A	1	. O-ring	C
7			1	. Bearing assembly	C
8			1	. Ring	C
9			1	. Cross pin	C
10			1	. Cardan shaft	C
11			1	. Set off springs	C
12		A	1	. O-ring	C
13			1	. Distributor plate	C
14			1	. Gear wheel set	C
15		A	2	. O-ring	C
16			1	. End cover	C
17		A	7	. Washer	C
18			1	. Screw with pin	C
19			6	. Screw	C
20			1	. Name plate	C
21			1	. Pilote relief valve	C
22			2	. Shock valve	C
23			2	. Ball	C
24			2	. Bushing with pin	C
25			1	. Check valve	C
26	4700935429		1	. Seal kit	

A) Included in seal kit, item 26

Brake system

18884

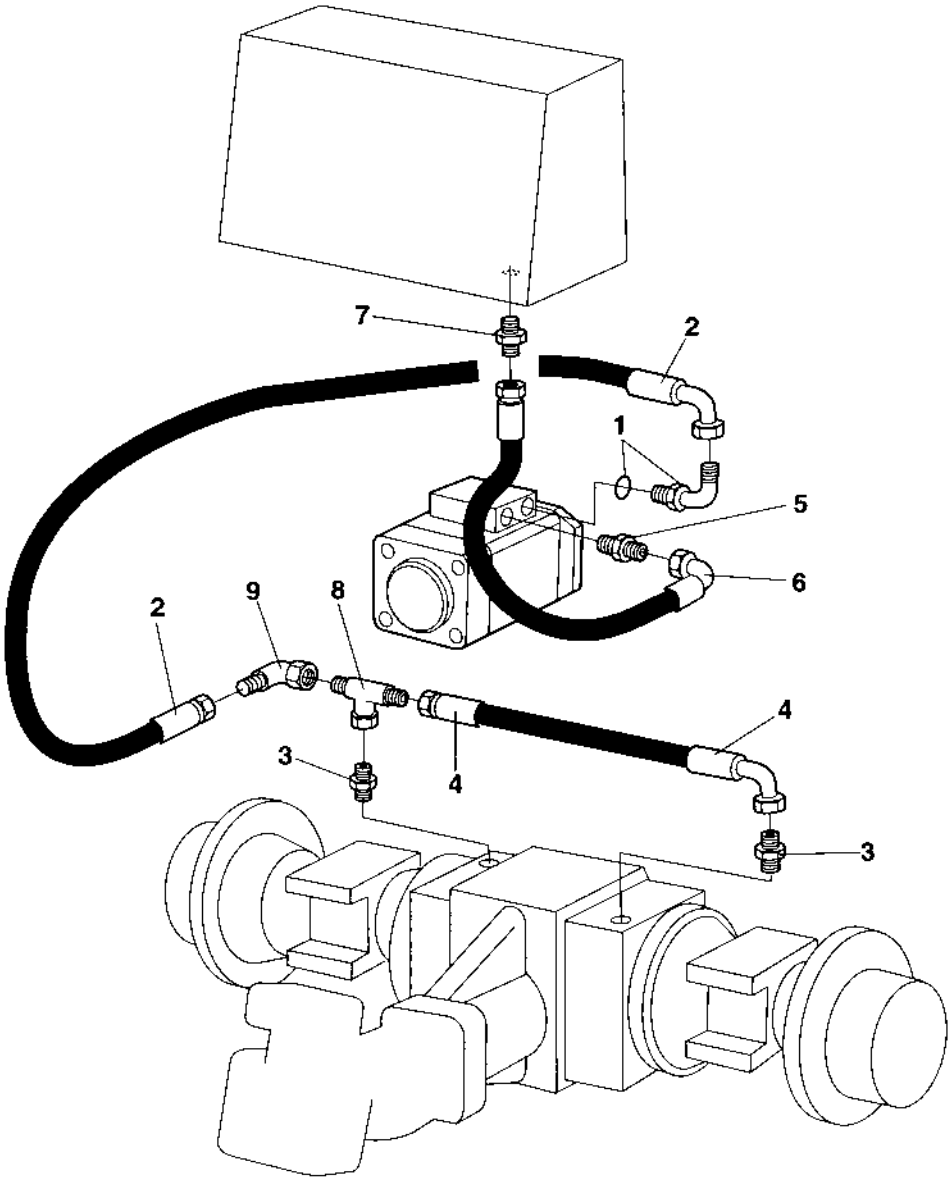

Brake system

Item	Part No	Rem	Qty	Description	Code
1	4700334389		1	Connector	C
2	4700482543		1	Hydraulic hose	
3	4700900552		2	Adapter	
4	4700482399		1	Hydraulic hose	
5	4700234843		1	Adapter	
6	4700482516		1	Hydraulic hose	
7	4700334205		1	Straight connector	
8	4700234888		1	Tee-connector	
9	4700334524		2	Connector	C

Variable rear axle motor Option

16627

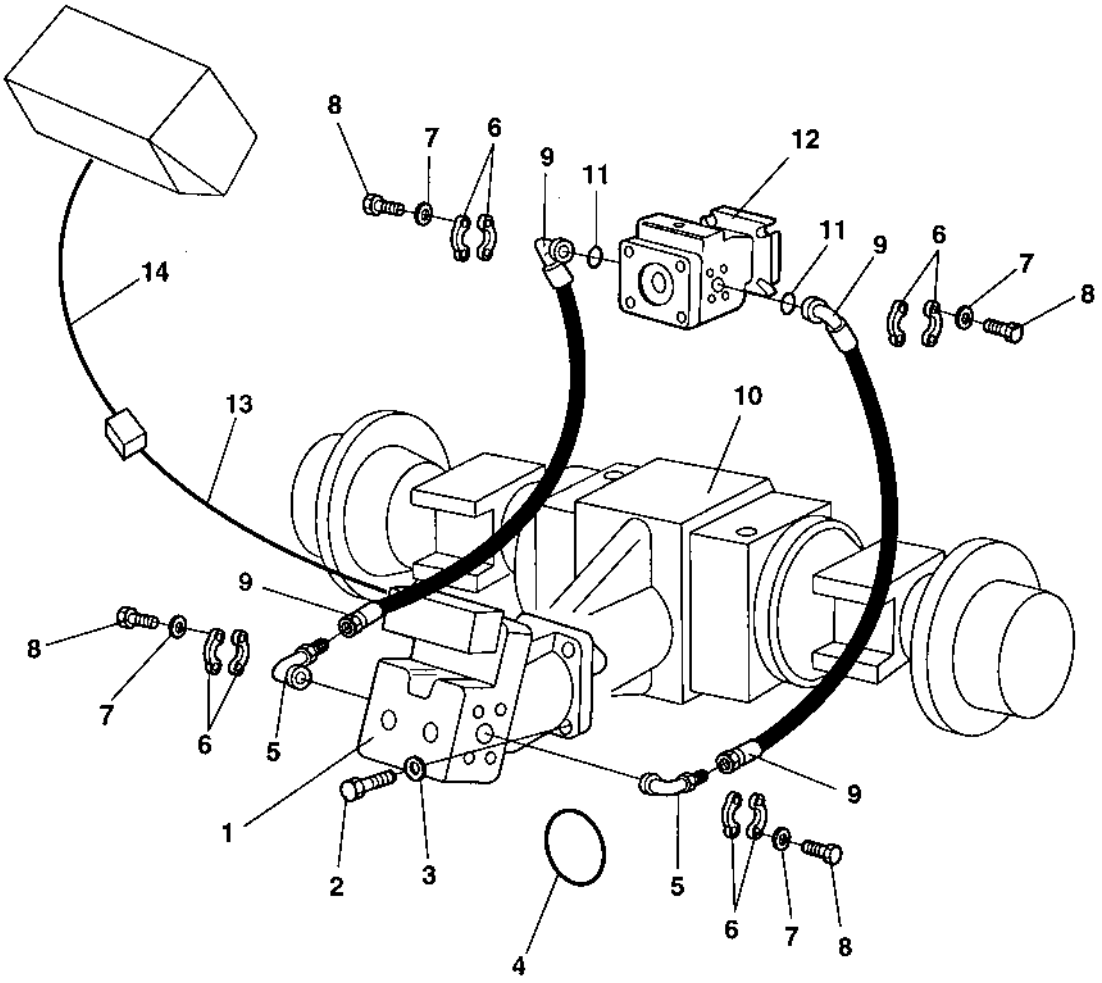

Variable rear axle motor Option

Item	Part No	Rem	Qty	Description	Code
1	4700383973		1	Propulsion motor	
2	4700500263		4	Screw M18x60	
3	4700904793		4	Washer 19x34x3	
4	4700160157		1	O-ring Model Kontroleras	D
5	4700791213		2	Flange fitting 90	
6	4700923384		8	Flange half	
7	4700904638		16	Washer 12x22x2	
8	4700502132		16	Screw UNC 7/16" x 22	
9	4700483551		2	Hydraulic hose	
10	4700383855		1	Rear axle Limited Slip (Page 100)	
11	4700904005		2	O-ring	
12	4700380829		1	Propulsion pump (Page 74)	C
13	4700380577		1	Cable harness	
14	4700380700		1	Cable harness	

4700383855 Rear axle Limited Slip

17463

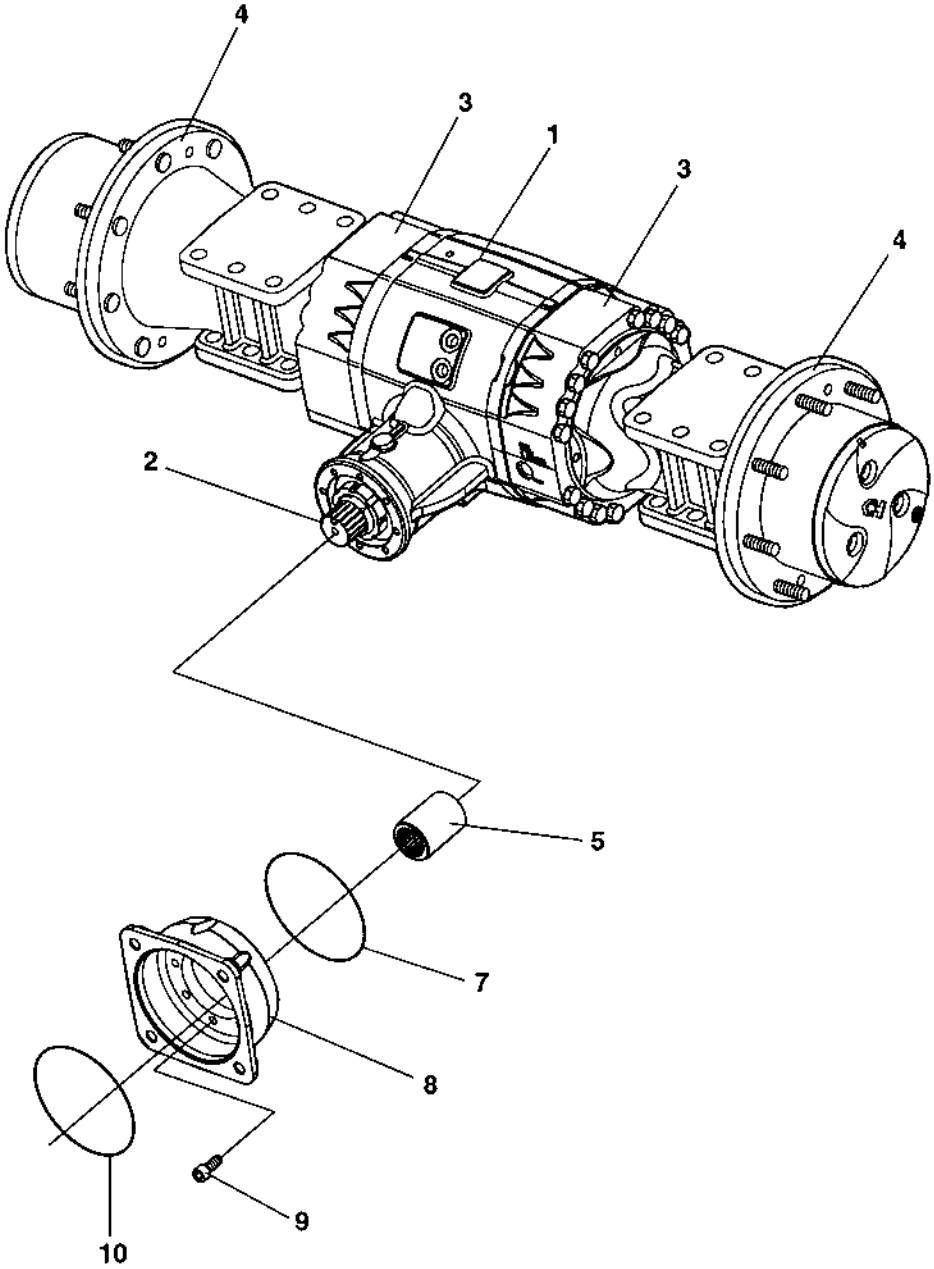

4700383855 Rear axle Limited Slip

Item	Part No	Rem	Qty	Description	Code
1			1	Housing (Page 102)	
2			2	Differential with limited slip (Page 104)	
3			1	Brakes (Page 106)	
4			2	Planet gear (Page 108)	
5	4700901834		1	Splined sleeve	
7	4700929648		1	O-ring	D
8	4700909583		1	Flange	
9	4700909582		8	Screw	
10	4700909584		1	O-ring	D

Housing

17503

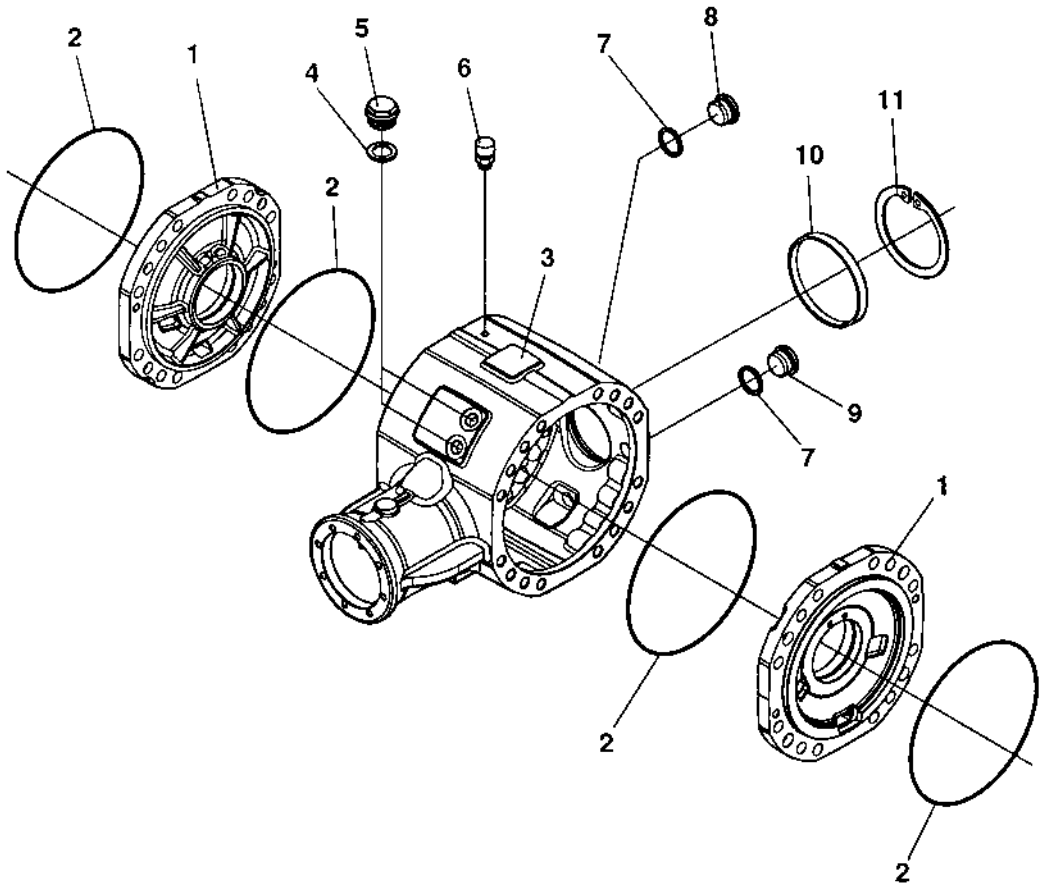

Housing

Item	Part No	Rem	Qty	Description	Code
1	4700938980		2	Cover	
2	4700938981		4	O-ring	
3	4700938982		1	Housing	
4	4700938983		2	Sealing washer	
5	4700909544		4	Screw	
6	4700938984		1	Vent nipple	
7	4700909607		2	Seal	D
8	4700938985		1	Magnetic plug	
9	4700909596		1	Plug	
10	4700938986		1	Plug	
11	4700938987		1	Circlip	

Differential with limited slip

17490

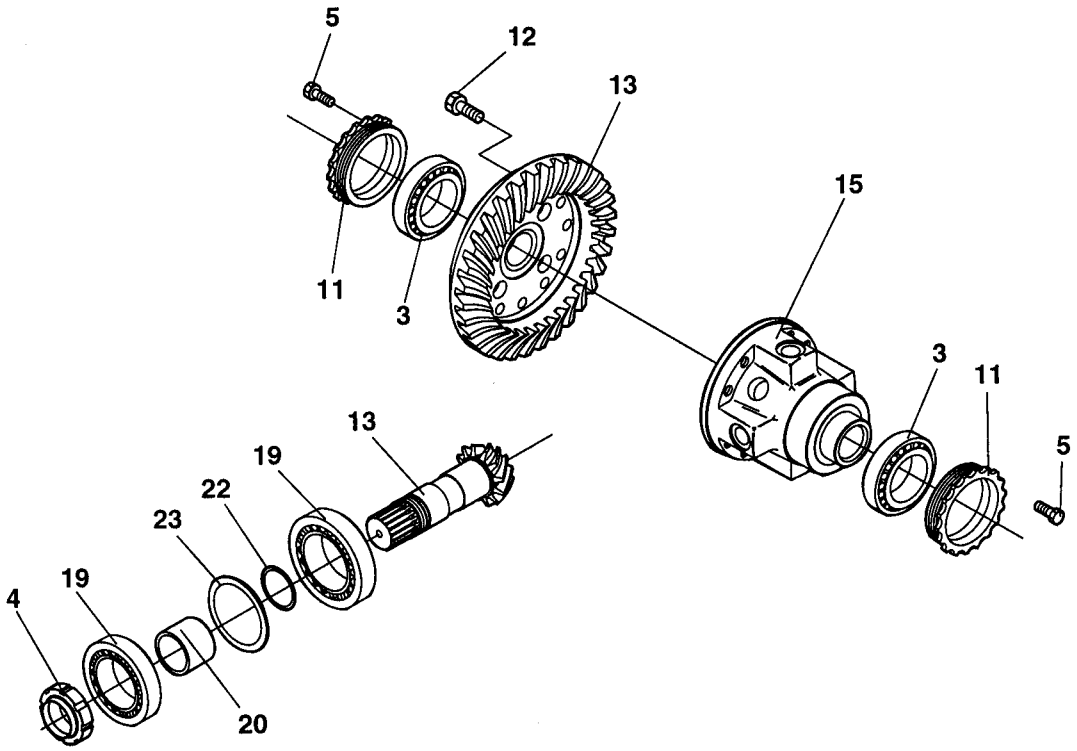

Differential with limited slip

Item	Part No	Rem	Qty	Description		Code
3	4700936023		2	Bearing		
4	4700938988		1	Ring nut		
5	4700938989		2	Screw		
11	4700938990		2	Ring nut		
12	4700938991		12	Screw		
13	4700938992		1	Gear set		
15	4700938994		1	Limited slip disc		
19	4700926116		2	Bearing		
20	4700938995		1	Spacer		
22	4700936052		N	Shim	0.10mm	
	4700936053		N	Shim	0.15mm	
	4700936054		N	Shim	0.20mm	
	4700936055		N	Shim	0.40mm	
	4700936056		N	Shim	0.50mm	
23	4700938996		N	Shim	0,20 mm	
	4700938997		N	Shim	0,30 mm	
	4700938998		N	Shim	0,15 mm	
	4700938999		N	Shim	0,10 mm	

Brakes

17491

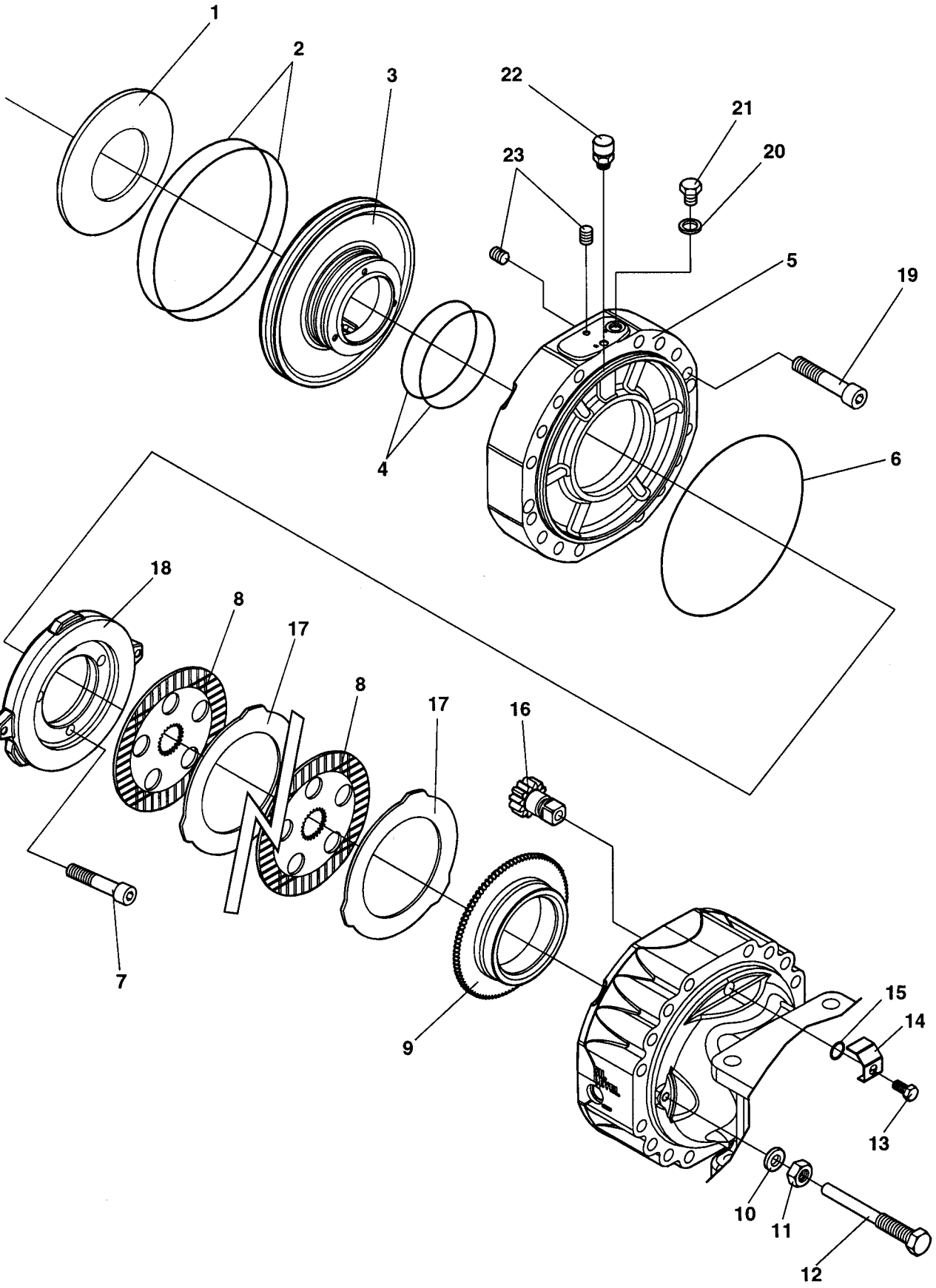

Brakes

Item	Part No	Rem	Qty	Description	Code
1	4700909616		2	Spring	
2	4700939021		4	O-ring	
3	4700939022		2	Piston	
4	4700939023		4	O-ring	
5	4700939024		2	Cover	
6	4700939025		2	O-ring	
7	4700939026		6	Screw	
8	4700939027		8	Brake disc	
9	4700939028		2	Ring	
10	4700939029		4	Lock washer	
11	4700900957		4	Nut	
12	4700939030		4	Adjusting bolt	
13	4700909547		2	Screw	
14	4700939031		2	Plate	
15	4700939032		2	O-ring	
16	4700936097		2	Pinion	
17	4700939033		8	Brake disc	
18	4700939034		2	Disc	
19	4700939035		4	Screw	
20	4700939036		2	Sealing washer	
21	4700939037		2	Screw	
22	4700939038		2	Vent nipple	
23	4700939039		4	Stop screw	

Planet gear

17494

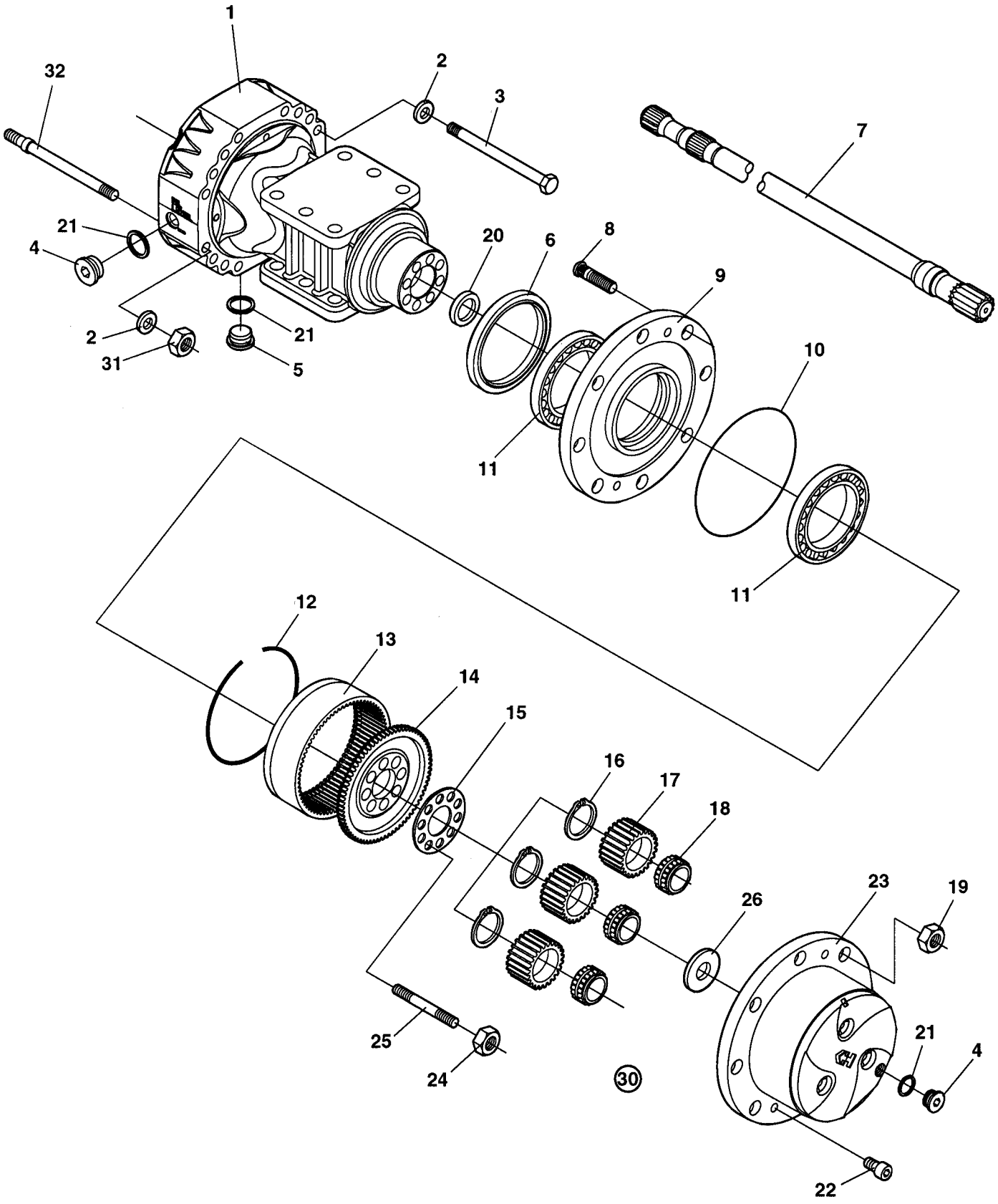

Planet gear

Item	Part No	Rem	Qty	Description	Code
1	4700939002		2	Housing	
2	4700939003		32	Spring washer	
3	4700939004		24	Screw	
4	4700909596		4	Plug	
5	4700938985		2	Magnetic plug	
6	4700939006		2	Seal	
7	4700939007		2	Shaft	
8	4700926781		16	Wheel screw	
9	4700939008		2	Wheel hub	
10	4700936020		2	O-ring	D
11	4700939009		4	Bearing	
12	4700939384	1	2	Circlip	
13	4700939385	1	2	Ring gear	
14	4700939386	1	2	Ring gear support	
15	4700939010		2	Lock plate	
16	4700939011	1	6	Circlip	
17	4700939012	1	6	Planet gear	
18	4700939013	1	6	Bearing	
19	4700901987		16	Wheel nut	
20	4700939014		2	Seal	
21	4700330333		6	Copper washer	D
22	4700939015		4	Screw	
23	4700939387	1	2	Planet gear carrier	
24	4700939016		16	Nut	
25	4700939017		16	Stud	
26	4700939270	1	2	Washer	
30	4700939018		2	Planet gear carrier Cpl.	
31	4700939019		8	Nut	
32	4700939020		8	Stud	

1) Included in ref. 30

Central test panel hydraulic Option

17493

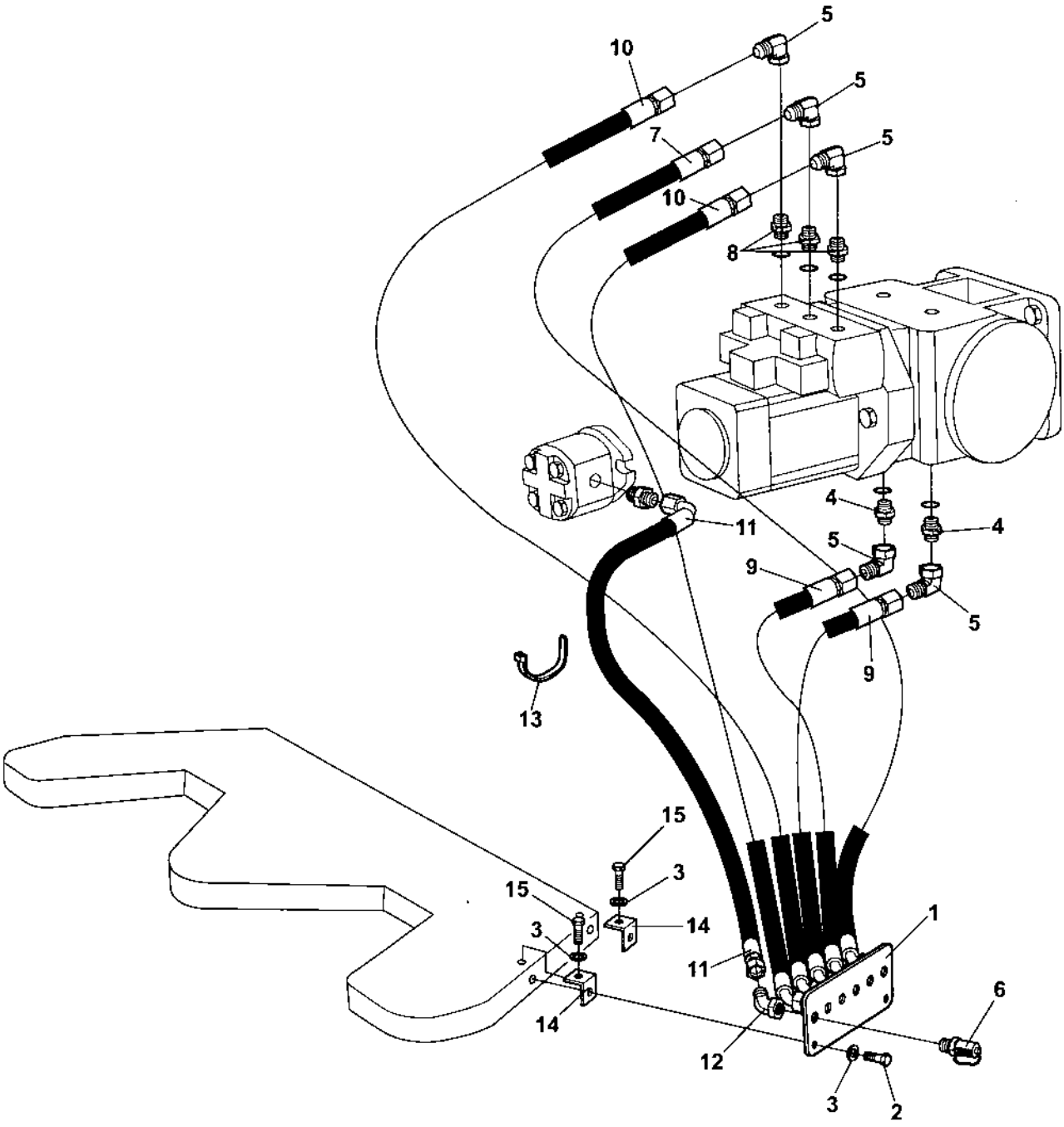

Central test panel hydraulic Option

Item	Part No	Rem	Qty	Description	Code
1	4700374028		1	Test panel	
2	4700500053		2	Screw M8x20H 8.8	C
3	4700904229		4	Washer 8,4x16x1,5	C
4	4700234388		2	Connector	C
5	4700334196		5	Elbow 90	C
6	4700356348		6	Measuring nipple	D
7	4700482342		1	Hydraulic hose	
8	4700902125		3	Connector	
9	4700483188		2	Hydraulic hose	
10	4700483445		2	Hydraulic hose	
11	4700483547		1	Hydraulic hose	
12	4700234622		1	Elbow 45	C
13	4700313102			Cable ties	C
14	4700908136		2	Bracket	
15	4700500018		2	Screw M8-1,25x12 8,8	C

Electrical equipment

Item	Part No	Rem	Qty	Description	Code
10				Electric system (Page 114)	
20				Control panel (Page 116)	
40				Working lights Option (Page 118)	
70				Rotating beacon Option (Page 120)	
85				Back-up alarm Option (Page 122)	
90				Compaction meter Option (Page 124)	

Electric system

17470

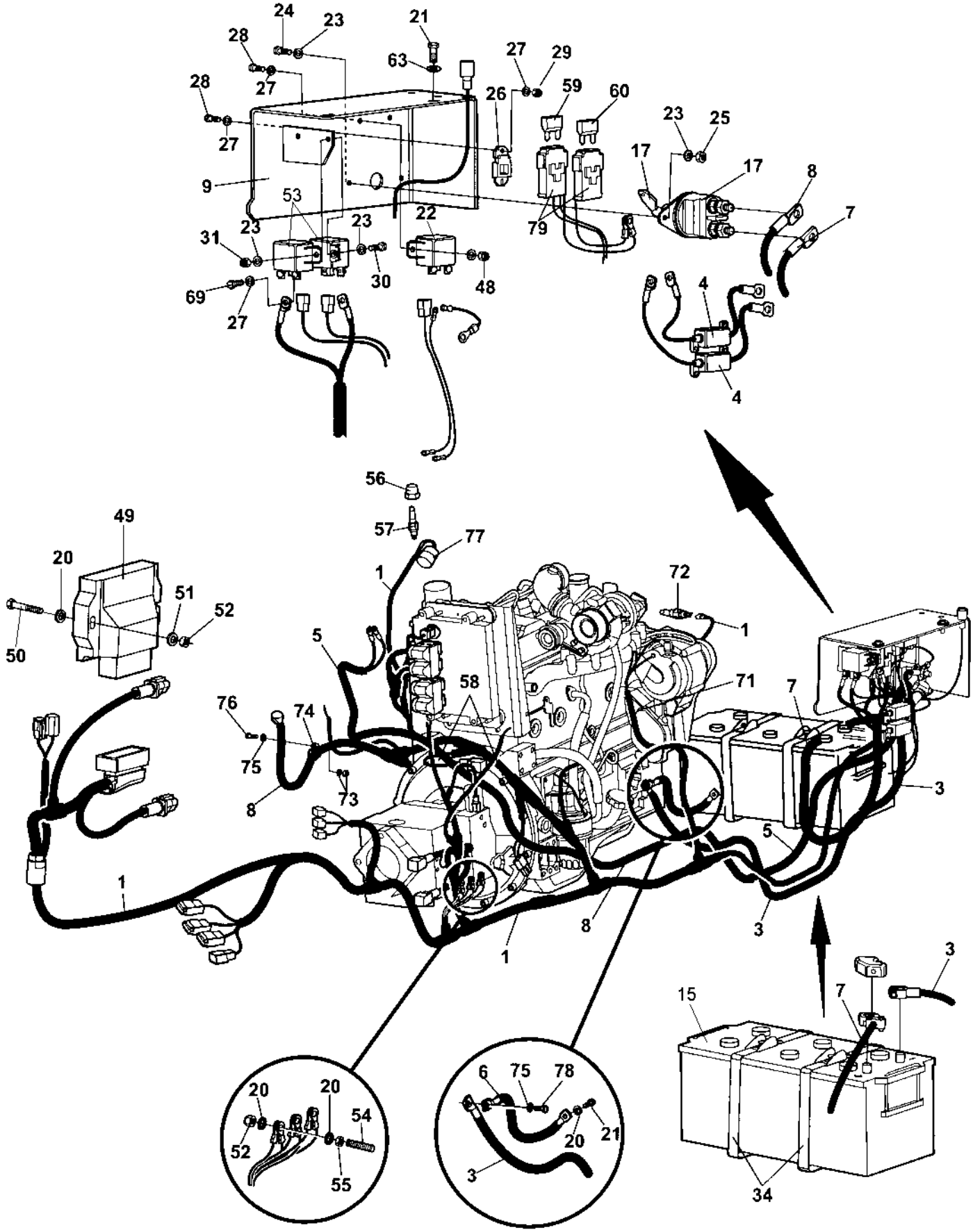

Electric system

Item	Part No	Rem	Qty	Description	Code
1	4700394561		1	Cable harness	
3	4700792677		1	Battery cable	
4	4700387427		1	Cable harness	
5	4700392937		1	Cable harness	
6	4700791525		1	Connection cable, coarse	
7	4700791503		1	Battery cable	
8	4700791141		1	Battery cable	
9	4700394713		1	Cover	
15	4700792682		1	Battery	
17	4700903640		1	Battery switch	D
	4700903641		1	Key	D
20	4700904229		9	Washer 8,4x16x1,5	C
21	4700500053		3	Screw M8x20H 8.8	C
22	4700791183	A	1	Relay	D
23	4700904228		8	Washer 6,4x12x1,5	C
24	4700500013		2	Screw M6-1x16 8,8	C
25	4700570004		2	Nut M6X1,00 -8 A2K	C
26	4700904036		1	Fuse holder	D
27	4700904281		10	Washer 5,3x10x1 300HV	C
28	4700500060		4	Screw M5-0,8x20 8.8	C
29	4700586001		2	Lock nut	C
30	4700500075		1	Screw M6-1,0x25 8.8	C
31	4700586002		2	Lock nut M6 -8	C
34	4700389662		2	Strap	
48	4700902284		2	Nut M5	C
49	4700378745		1	Control unit, ECU	
50	4700500025		2	Screw M8-1,25x50 8,8	C
51	4700904556		2	Washer 8,4x16x3,0	C
52	4700586003		5	Lock nut M8	C
53	4700791183		2	Relay	D
54	4700903768		3	Threaded stud	C
55	4700570005		3	Nut M8	C
56	4700813434		1	Reducer	
57	4700903631		1	Temperature sensor Hydraulic oil	B
58	4700960727		4	Clamp	
59	4700904038		1	Fuse 40A	A
60	4700904037		1	Fuse 30A	A
63	4700904230		2	Steel plain washer	C
65	4700313041			Cable ties	C
69	4700500004		4	Screw M5 0,8x12 8,8	C
71	4700921080		1	Clamp	C
72	4700903632		1	Temperature sensor Engine	
73	4700904557		2	Steel plain washer	C
74	4700921104		1	Clamp	C
75	4700904637		2	Washer	C
76	4700500030		1	Hexagon head screw	C
77	4700929023		1	Indicator	B
78	4700500029		1	Hexagon head screw	C
79	4700904032		2	Fuse holder	D

A) Replaces P/N 4700904448 as Start relay from January 2009.

Control panel

18757

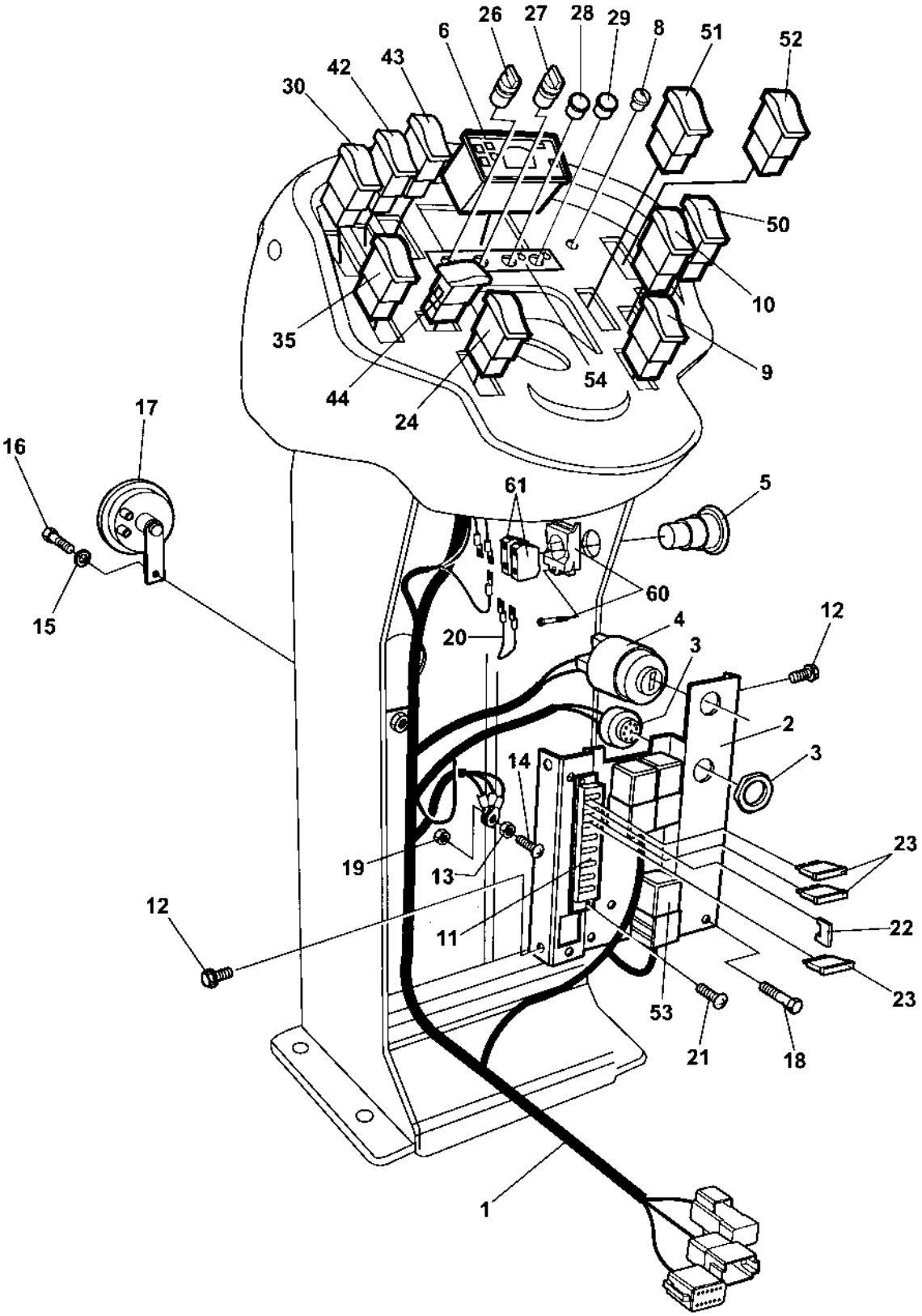

Control panel

Item	Part No	Rem	Qty	Description	Code
1	4700396968	B	1	Cable harness	
2	4700387683		1	Distribution control plate	
3	4700385599		1	Buzzer	B
4	4700238158		1	Ignition switch	
	4700940451		1	. Key	
5	4700791739		1	Emergency stop	
6	4700392996		1	Control panel	
8	4700792083		N	Plug	
9	4700792414		1	Switch, RPM	
10	4700792461		1	Switch, vibration	
11	4700791185		1	Fuse box	
12	4700903782		4	Screw M5x12	C
13	4700570004		3	Nut M6X1,00 -8 A2K	C
14	4700500075		1	Screw M6-1,0x25 8.8	C
15	4700904229		1	Washer 8,4x16x1,5	C
16	4700500053		1	Screw M8x20H 8.8	C
17	4700999027		1	Horn	B
18	4700500075		1	Screw M6-1,0x25 8.8	C
19	4700586002		1	Lock nut M6 -8	C
20	4700343550		1	Connection cable	B
21	4700901767		2	Screw ST3,5x9,5 Black	C
22	4700791211		N	Contact bridge	
23	4700901228		N	Fuse 15A	A
	4700901227		N	Fuse 10A	A
	4700901225		N	Fuse 5A	A
24	4700791582		1	Switch, parking brake	
26	4700792317		1	Switch	
27	4700792318		1	Switch	
28	4700792435		1	Pilot lamp Red	
	4700792432		1	Illuminated block red	
29	4700792319		1	Pilot lamp Yellow	
	4700792315		1	Illuminated block yellow	
30	4700791587	A	1	Switch, working light	
35	4700791585	A	1	Switch, rotating beacon	
42	4700791583	A	1	Switch, driving light	
43	4700791584	A	1	Switch, hazard flashers	
44	4700792413	A	1	Switch, drive direction	
50	4700791588		1	Panel plug	
	4700792463	A	1	Switch, Power distribution	
51	4700791578		1	Switch, horn	
52	4700792462	A	1	Switch, TC & TM	
	4700791657		1	Switch, Hi-Lo Speed	
53	4700903956	A	1	Relay	A
54	4700394061		1	Decal	
60	4700791733		1	Fixing collar	C
61	4700791723		2	Connector	

A) Option
B) Control panel

Working lights Option

18887

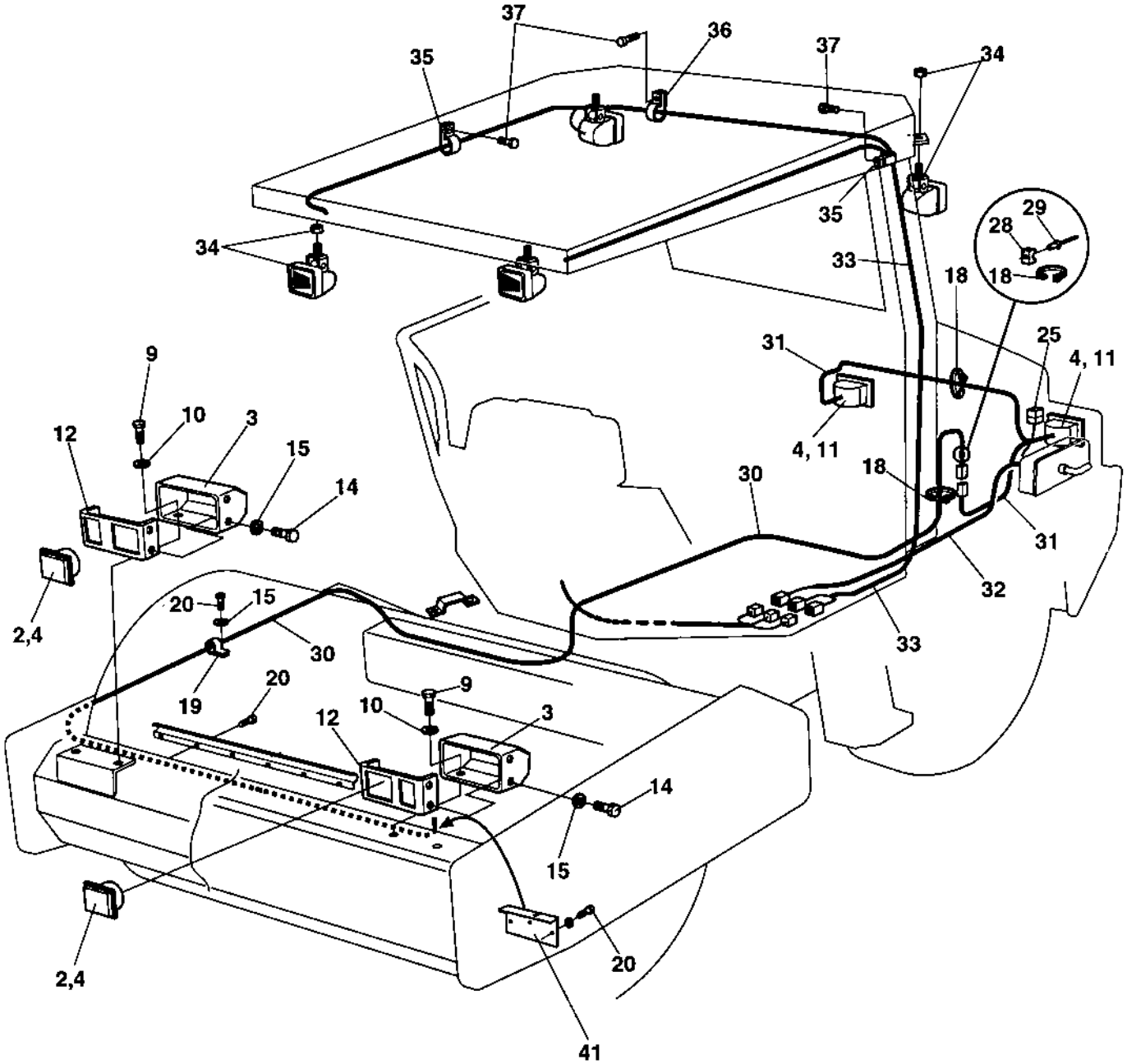

Working lights Option

Item	Part No	Rem	Qty	Description	Code
2	4700902227		2	Work light	B
3	4700374029		2	Lamp shield	
4	4700901369		4	Bulb 55w H3	B
9	4700500053		6	Screw M8x20H 8.8	C
10	4700904640		6	Washer 8,4x22x3	C
11	4700904314		2	Work lamp	B
12	4700374030		2	Bracket	
14	4700500040		8	Screw M6-1x20 8,8	C
15	4700904228		11	Washer 6,4x12x1,5	C
18	4700925802		7	Cable ties L=142 mm	C
19	4700921039		8	Pipe clamp	C
20	4700500012		3	Screw M6x12	C
25	4700904038		1	Fuse 40A	A
28	4700904543		7	Cable tie holder	
29	4700903436		7	Blind rivet	C
30	4700392771		1	Cable harness	
31	4700392856		1	Cable harness	
32	4700373184		1	Cable harness	
33	4700392772		1	Cable harness	
34	4812110216		4	Work lamp	
	4700904230		4	Steel plain washer	C
	4700586018		4	Lock nut	C
35	4700921039		2	Pipe clamp	C
36	4700791341		9	Clamp	
37	4700541702		11	Screw M6x12	C
41	4700384163		2	Protection	

Rotating beacon **Option**

18490

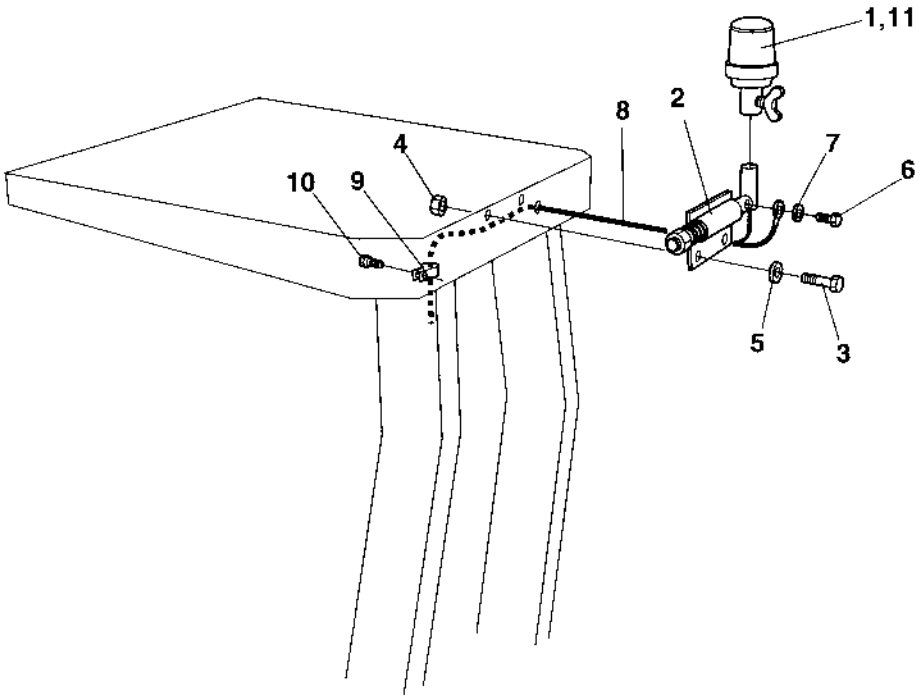

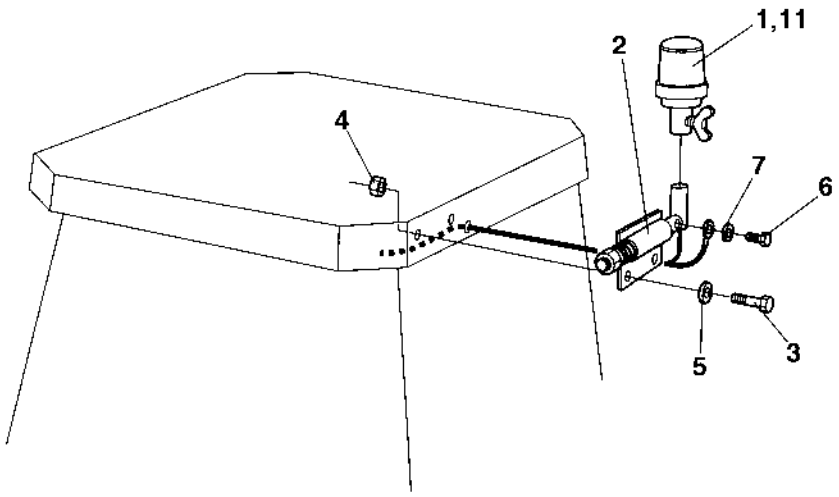

Rotating beacon Option

Item	Part No	Rem	Qty	Description	Code
1	4700999011	1	1	Rotating beacon	B
2	4700358452		1	Lamp holder	D
3	4700500021		2	Screw M8-1,25x25 8.8	C
4	4700586003		2	Lock nut M8	C
5	4700904229		2	Washer 8,4x16x1,5	C
6	4700500013		1	Screw M6-1x16 8,8	C
7	4700904228		1	Washer 6,4x12x1,5	C
8	4700374398		1	Cable harness	
9	4700921039		1	Pipe clamp	C
10	4700541702		1	Screw M6x12	C
11	4700389577	2	1	Rotating beacon	D

1) Is replaced by item 11, P/N 4700389577
2) Replaces item 1, P/N 4700999011

Back-up alarm Option

16981

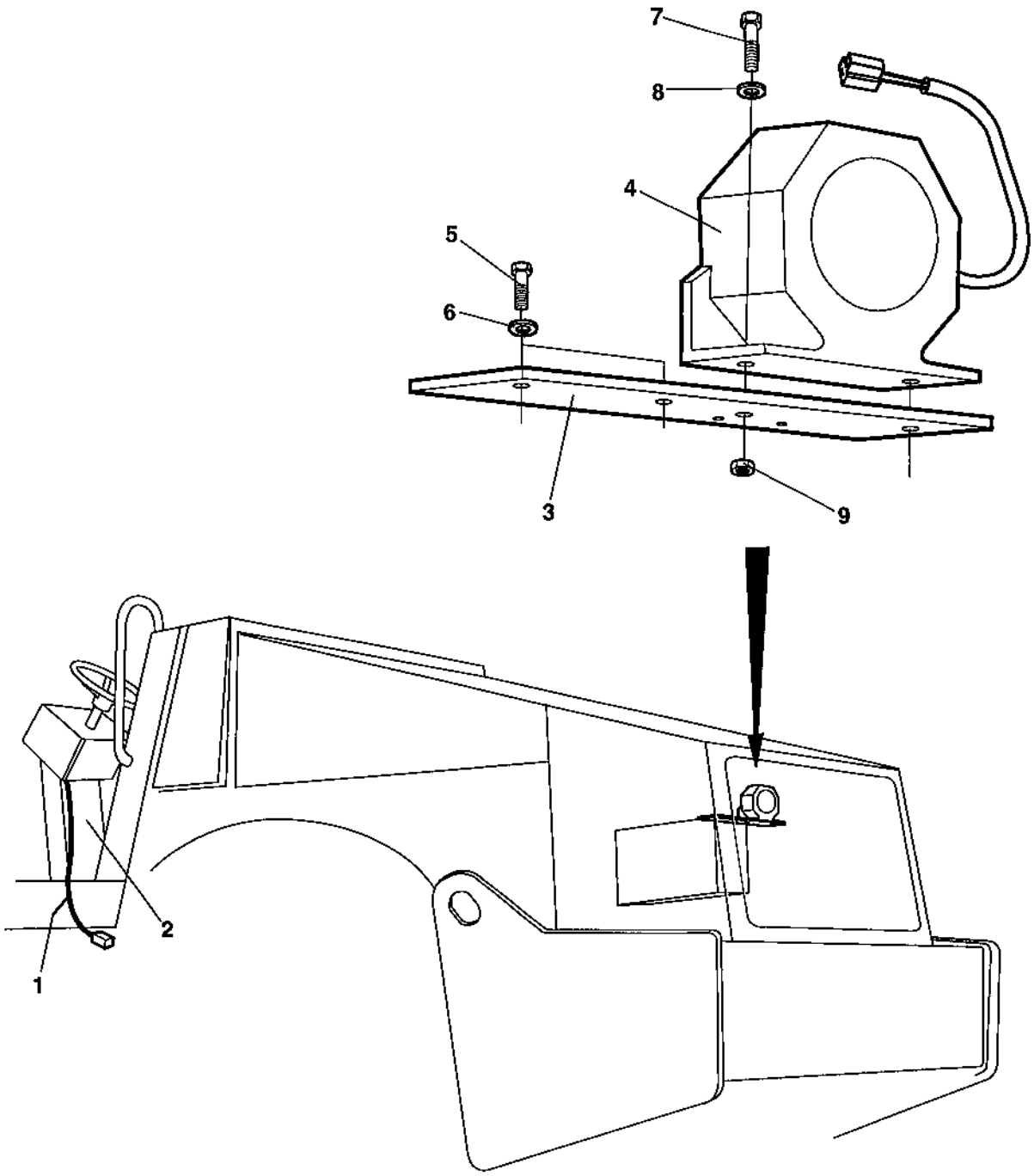

Back-up alarm Option

Item	Part No	Rem	Qty	Description	Code
1	4700380798	A	1	Cable harness	
2	4700901224	B	1	Fuse 3A	A
3	4700377071		1	Bracket	
4	4700904910		1	Back-up alarm	
5	4700500053		2	Screw M8x20H 8.8	C
6	4700904229		2	Washer 8,4x16x1,5	C
7	4700500040		2	Screw M6-1x20 8,8	C
8	4700904228		2	Washer 6,4x12x1,5	C
9	4700586002		2	Lock nut M6 -8	C

A) Is connected to the main wiring harness.
B) Located in the fusebox on the control panel.

Compaction meter Option

17984

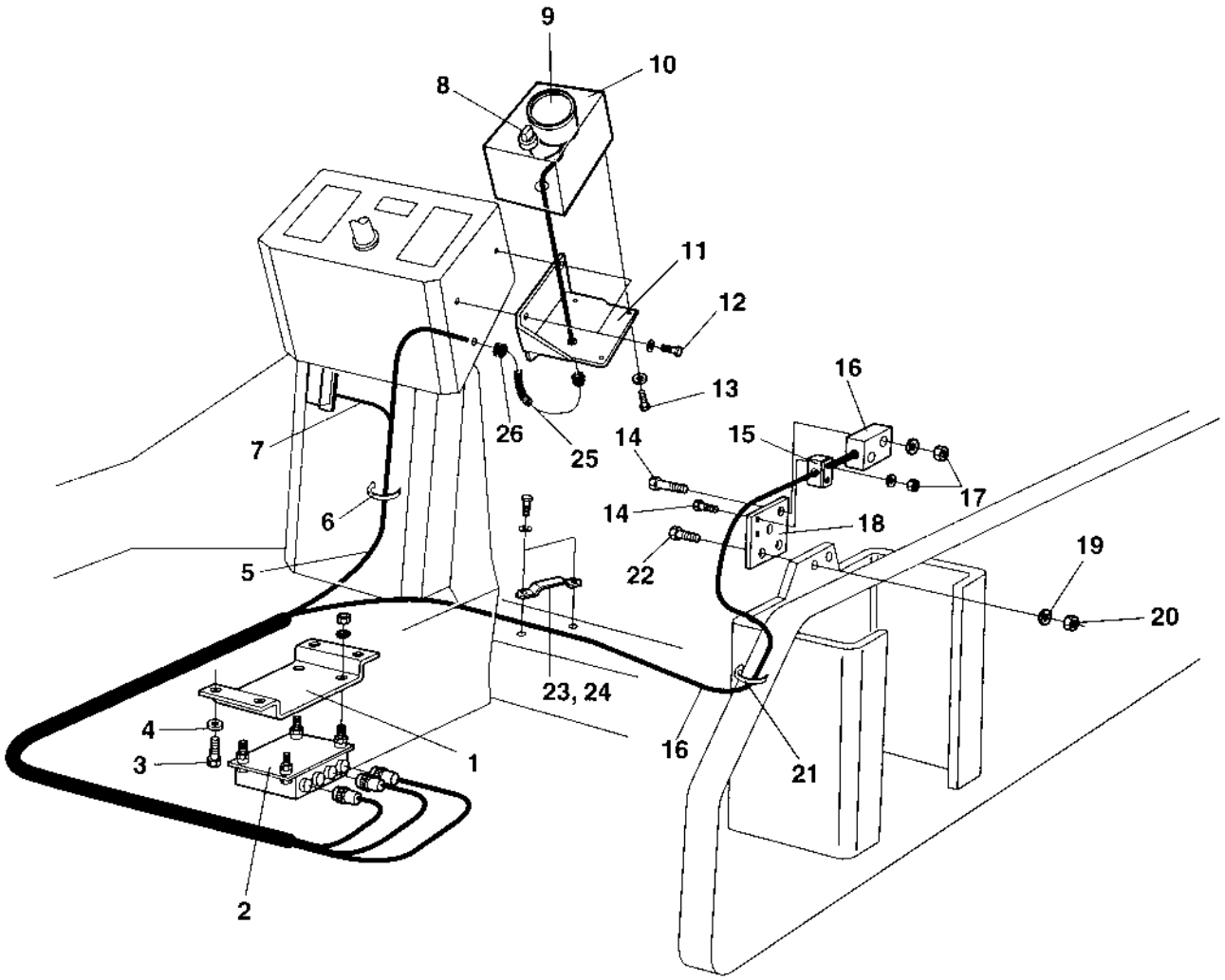

Compaction meter Option

Item	Part No	Rem	Qty	Description	Code
1	4700372836		1	Bracket	
2	4700388210		1	Processor comp.meter	
3	4700500053		4	Screw M8x20H 8.8	C
4	4700904229		4	Washer 8,4x16x1,5	C
5	4700372784		1	Cable harness	
6	4700313102		N	Cable ties	C
7	4700381351		1	Cable harness	
8	4700930151		1	Switch	B
9	4700383452		1	Compaction meter	
10	4700373096		1	Instrument box	
11	4700383326		1	Bracket	
12	4700904206		3	Screw	C
13	4700541526		4	Screw	
14	4700500079		4	Screw M6-1x50 8,8	
15	4700902496		1	Clamp	
16	4700348213		1	Sensor, cpl	
17	4700902285		7	Nut	C
18	4700373140		1	Bracket	
19	4700904231		2	Steel plain washer	C
20	4700902288		2	Nut M12	
21	4700313041		N	Cable ties	C
22	4700500194		2	Screw	C
23	4700373016		1	Hose clamp	
24	4700349435		1	Rubber part	
25	4700901190	A	1	Conduit	
26	4700903192		2	Grommet	

A) L=230mm

Drivers platform

Item	Part No	Rem	Qty	Description	Code
10				Drivers platform (Page 128)	
20				Control panel (Page 130)	
40				Forward and reverse control (Page 132)	
50				Steering column (Page 136)	
80				Canopy Option (Page 138)	
90				Rops and fops (Page 140)	
100				Cab mounting (Page 142)	
120				Cab 392479 (Page 144)	

Drivers platform

17358

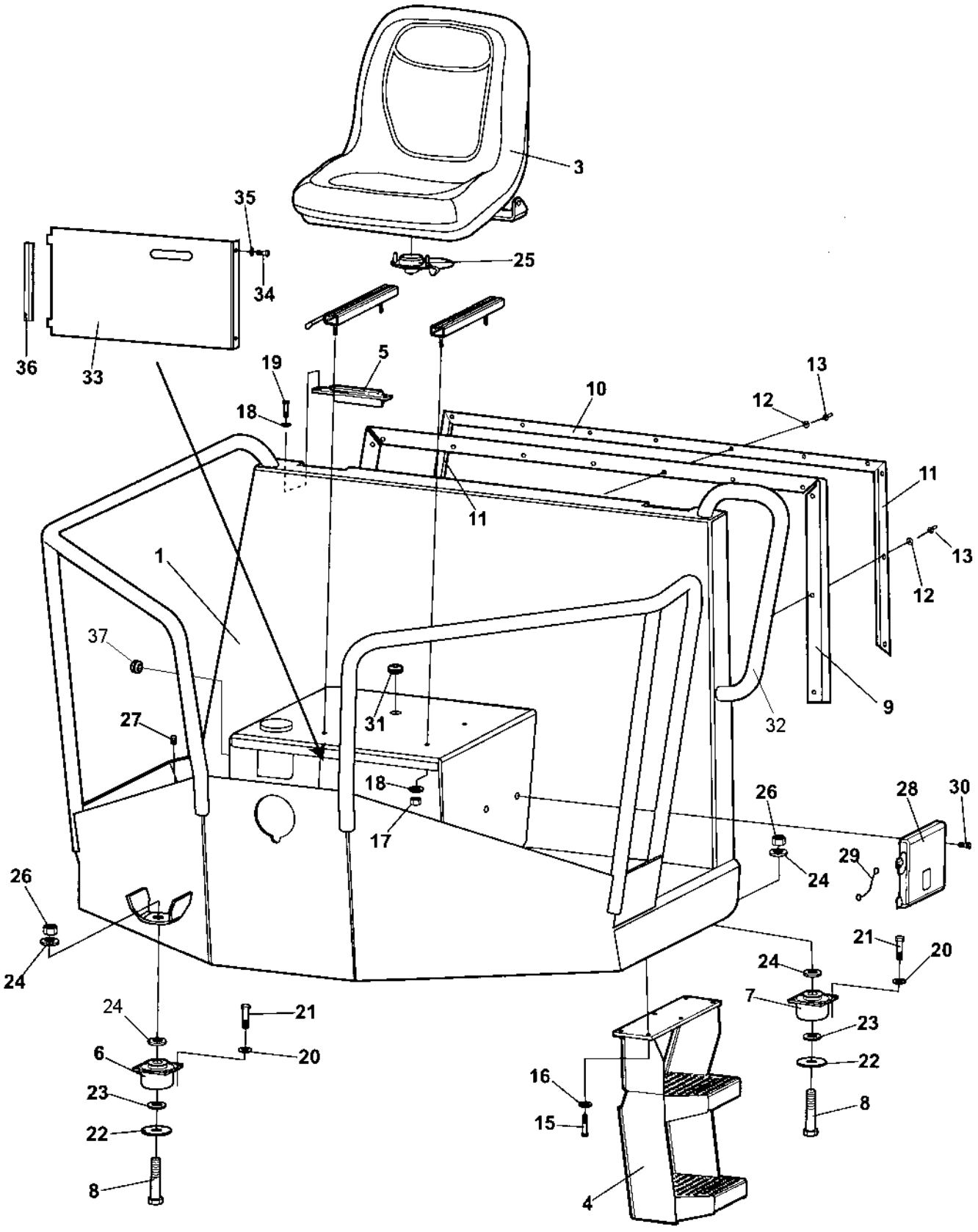

Drivers platform

Item	Part No	Rem	Qty	Description	Code
1	4700392394		1	Platform	
3	4700377556		1	Drivers seat, cpl	
4	4700376255		1	Step	
5	4700380727		2	Cover	
6	4700372757		2	Shock absorber	D
7	4700373400		2	Shock absorber	D
8	4700500210		4	Screw M20-2,5x100 8.8	
9	4700372494	A	1XL	Rubber strip	
10	4700372785		1	List	
11	4700382582		2	List	
12	4700927974		13	Washer	
13	4700904433		13	Blind rivet	
15	4700500029		4	Hexagon head screw	C
16	4700904230		4	Steel plain washer	C
17	4700586003		4	Lock nut M8	C
18	4700904229		8	Washer 8,4x16x1,5	C
19	4700500053		4	Screw M8x20H 8.8	C
20	4700904231		16	Steel plain washer	C
21	4700500195		16	Screw	C
22	4700347512		4	Washer	
23	4700903290		4	Washer 21x36x6	C
24	4700904233		8	Steel plain washer	C
25	4700379636	C	1	Seat switch	
	4812155075	D	1	Seat switch	
26	4700901145		4	Lock nut M20-10	
27	4700902203		2	Plug	C
28	4700383705		1	Instruction book holder	D
29	4700357643		1	Wire	D
30	4700791226		4	Screw	C
31	4700903192		1	Grommet	
32	4700380123		1	Grab handle	
33	4700392875		1	Cover	
34	4700500013		2	Screw M6-1x16 8,8	C
35	4700904228		2	Washer 6,4x12x1,5	C
36	4700902166	B	1XL	Edge trim	D
37	4700903727		1	Plug	

A) L=2,400M
B) L=0,210M
C) With bayonet fitting.
D) With screws.

Control panel

18726

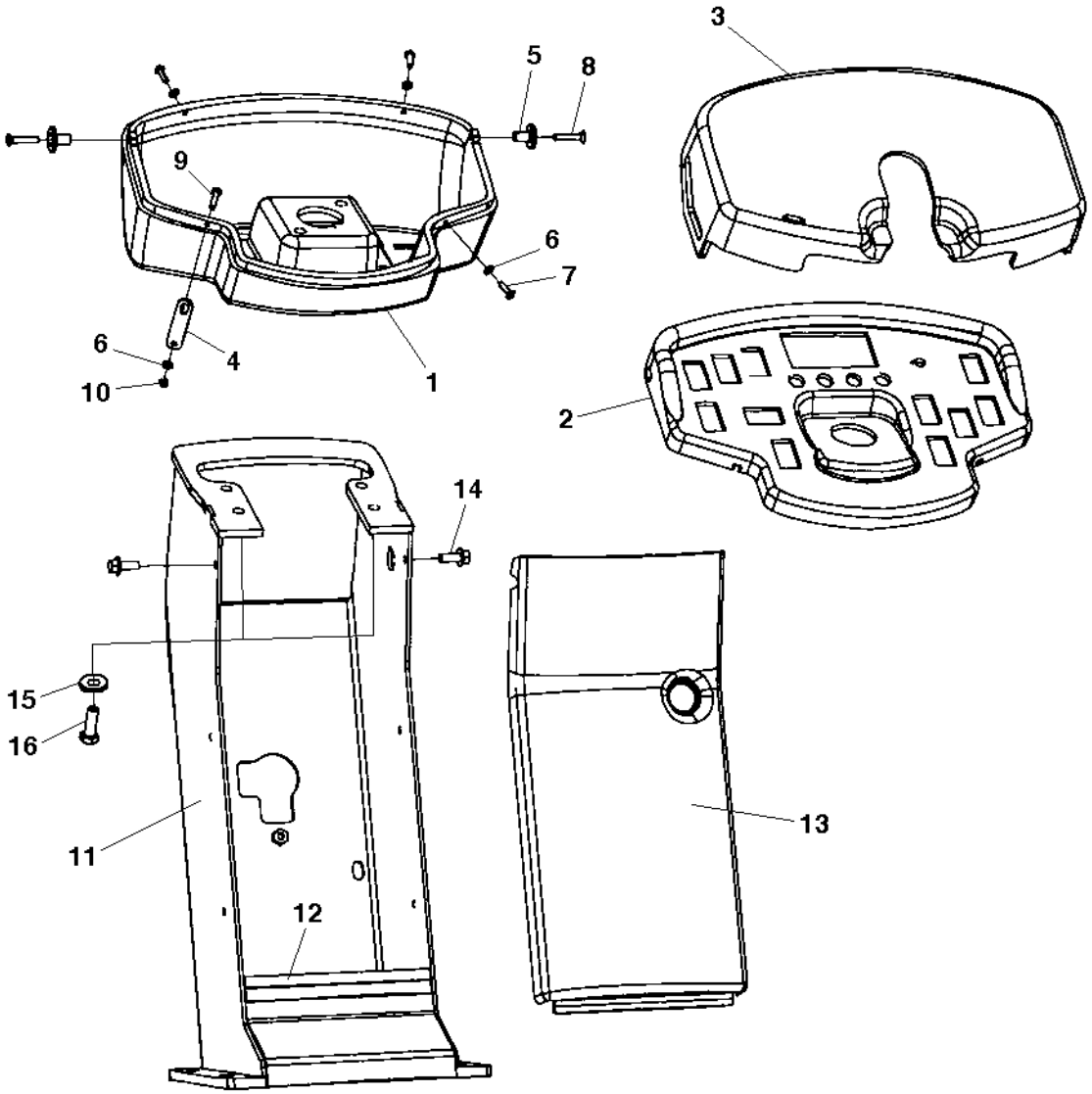

Control panel

Item	Part No	Rem	Qty	Description	Code
1	4700387720		1	Control panel holder	
2	4700391784		1	Control panel	
3	4700387227		1	Control panel cover	
4	4700387545		1	Latch	
5	4700357855		2	Bushing	C
6	4700904281		4	Washer 5,3x10x1 300HV	C
7	4700904653		3	Screw M5x16 A2-70	C
8	4700513017		2	Screw M6x30H 10,9	C
9	4700500007		1	Screw M5-0,8x22H 8,8	C
10	4700791476		1	Nut M5 -8	
11	4700378335		1	Control panel column	
12	4700902166	A	1XL	Edge trim	D
13	4700387226		1	Column cover	
14	4700500505		2	Screw M8x20 8.8	
15	4700904230		4	Steel plain washer	C
16	4700500029		4	Hexagon head screw	C

A) L=0,190 m

Forward and reverse control

18487

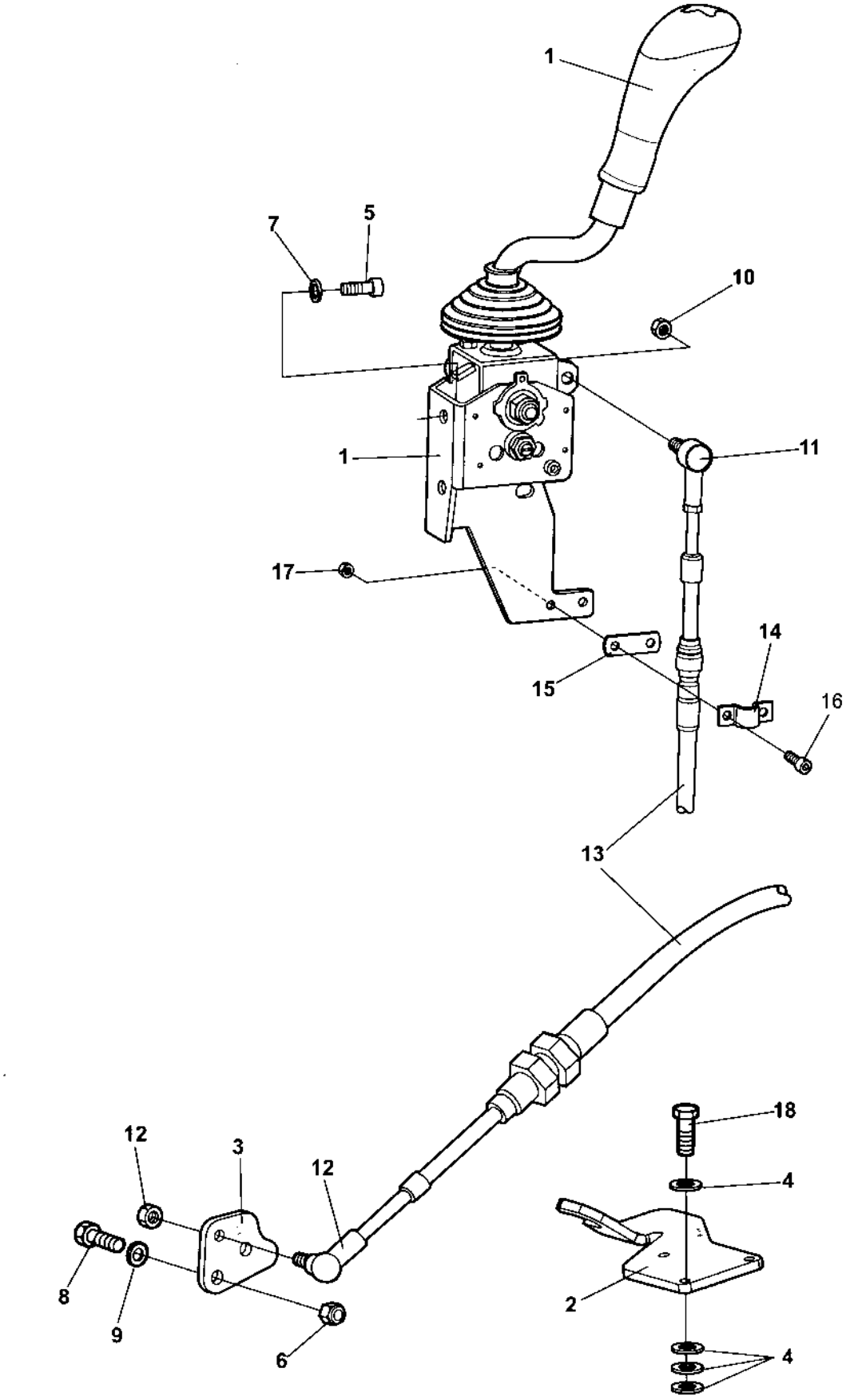

Forward and reverse control

Item	Part No	Rem	Qty	Description	Code
1			1	Forward and reverse control handle (Page 134)	
2	4700384888		1	Bracket	
3	4700380366		1	Control bracket	
4	4700904228		12	Washer 6,4x12x1,5	C
5	4700508092		2	Screw	C
6	4700586003		2	Lock nut M8	C
7	4700904556		2	Washer 8,4x16x3,0	C
8	4700500021		2	Screw M8-1,25x25 8.8	C
9	4700904229		2	Washer 8,4x16x1,5	C
10	4700586003		1	Lock nut M8	C
11	4700377019		1	Ball joint	
12	4700416034		1	Ball joint	C
13	4700377024	A	1	Cable Forward/Reverse	
14	4700377020		1	Clamp	
15	4700377021		1	Spacer	
16	4700926537		2	Screw M5-0,8x16H 8,8	
17	4700586001		1	Lock nut	C
18	4700791110		3	Screw M6x25	

A) L=1,900M

Forward and reverse control handle

18762

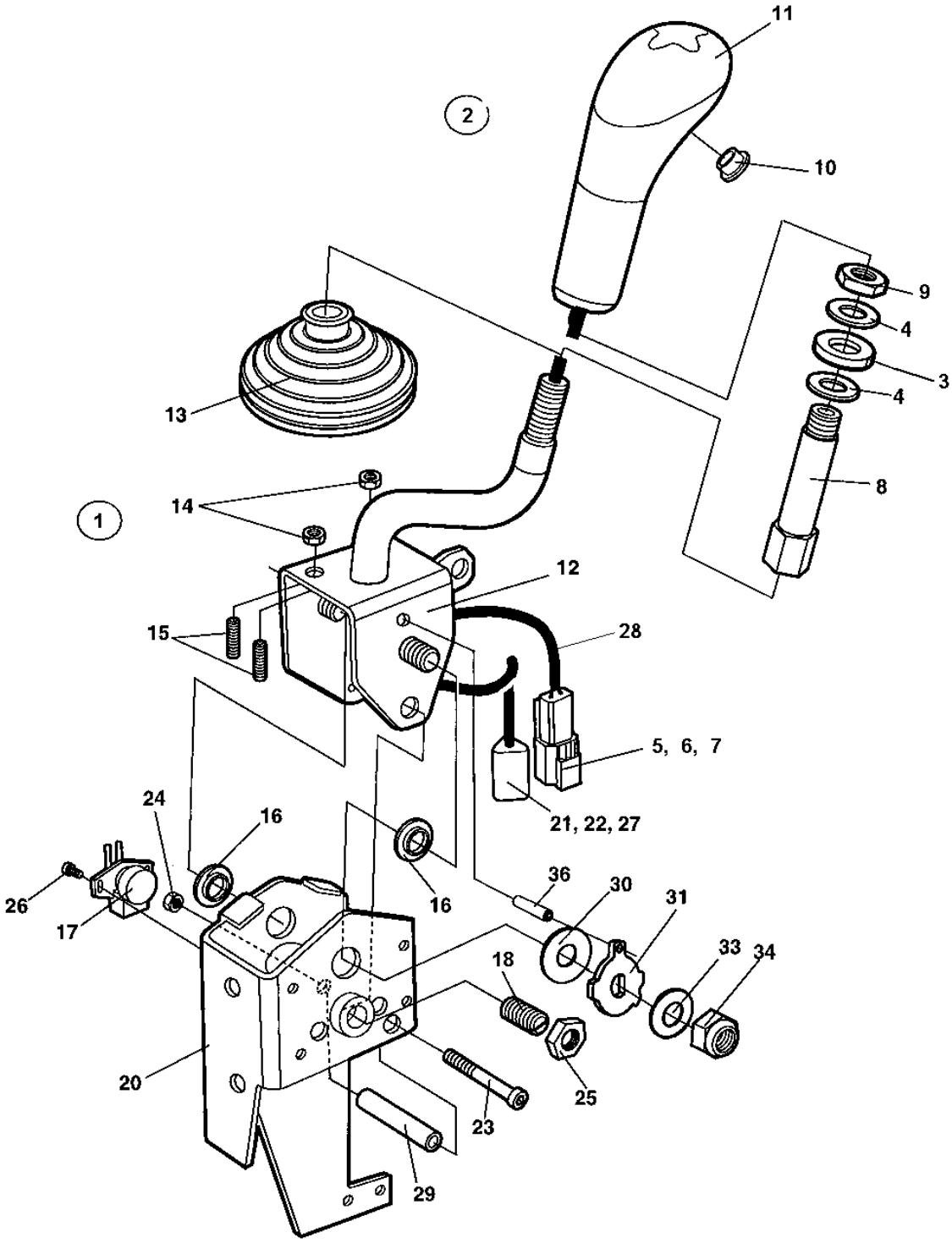

Forward and reverse control handle

Item	Part No	Rem	Qty	Description	Code
1	4700945407		1	Lever, cpl	
2	4700940374		1	. Handle kit, cpl	
			1	. . Handle	
	4700945729		1	. . . Push-button switch	
			1	. . . Cable	
			1	. . Lock fluid	
			1	. . Service information	
3			1	. . Washer	
4			2	. . Washer	
5			1	. . Connector, receptable	
6			1	. . Lock wedge	
7			2	. . Pin	
8			1	. . Rod	
9			1	. . Nut	
10	4700377018		1	. . Protection plug	
11	4700378759		1	. . Handle top	
12	4700391379		1	. Lever	
13	4700377009		1	. Bellows	
14	4700570004		2	. Nut M6X1,00 -8 A2K	C
15	4700377015		2	. Set screw	
16	4700391381		1	Bushing	
17	4700391382		1	Potentiometer with cable	
18	4700377016		1	Spring loaded pin	
20	4700377010		1	Bracket	
21	4700903945		1	Connector, plug	
22	4700903946		1	Lock wedge	
23	4700508068		1	Screw	
24	4700904563		1	Lock nut M6	C
25	4700927233		1	Nut	C
26	4700391383		1	Screw	
27	4700903947		3	Pin	
28		B	1	Cable	
29	4700377011		1	Spacer	
30	4700377012		1	Friction washer	
31	4700391380		1	Cam washer	
33	4700377014		1	Spring washer	
34	4700586019		1	Lock nut	C
36	4700391386		1	Spirol pin	

B) Included in potentiometer Pos 17

Steering column

18071-2

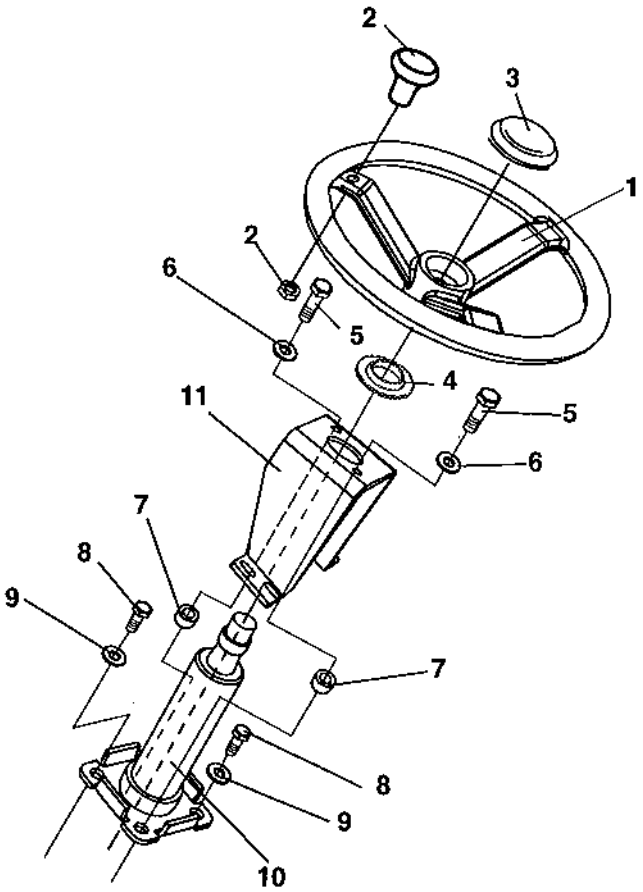

Steering column

Item	Part No	Rem	Qty	Description	Code
1	4700372964		1	Steering wheel, cpl	D
2	4700935614		1	. Turning knob	D
3	4700935613		1	. Cover	D
4	4700928830		1	Rubber washer	
5	4700500030		2	Hexagon head screw	C
6	4700904230		2	Steel plain washer	C
7	4700355869		2	Spacer sleeve	
8	4700500048		2	Screw M10-1,5x20 8,8	C
9	4700904230		4	Steel plain washer	C
10	4700902123		1	Steering column	
11		A	1	Bracket	

A) Included in control panel

Canopy Option

18258

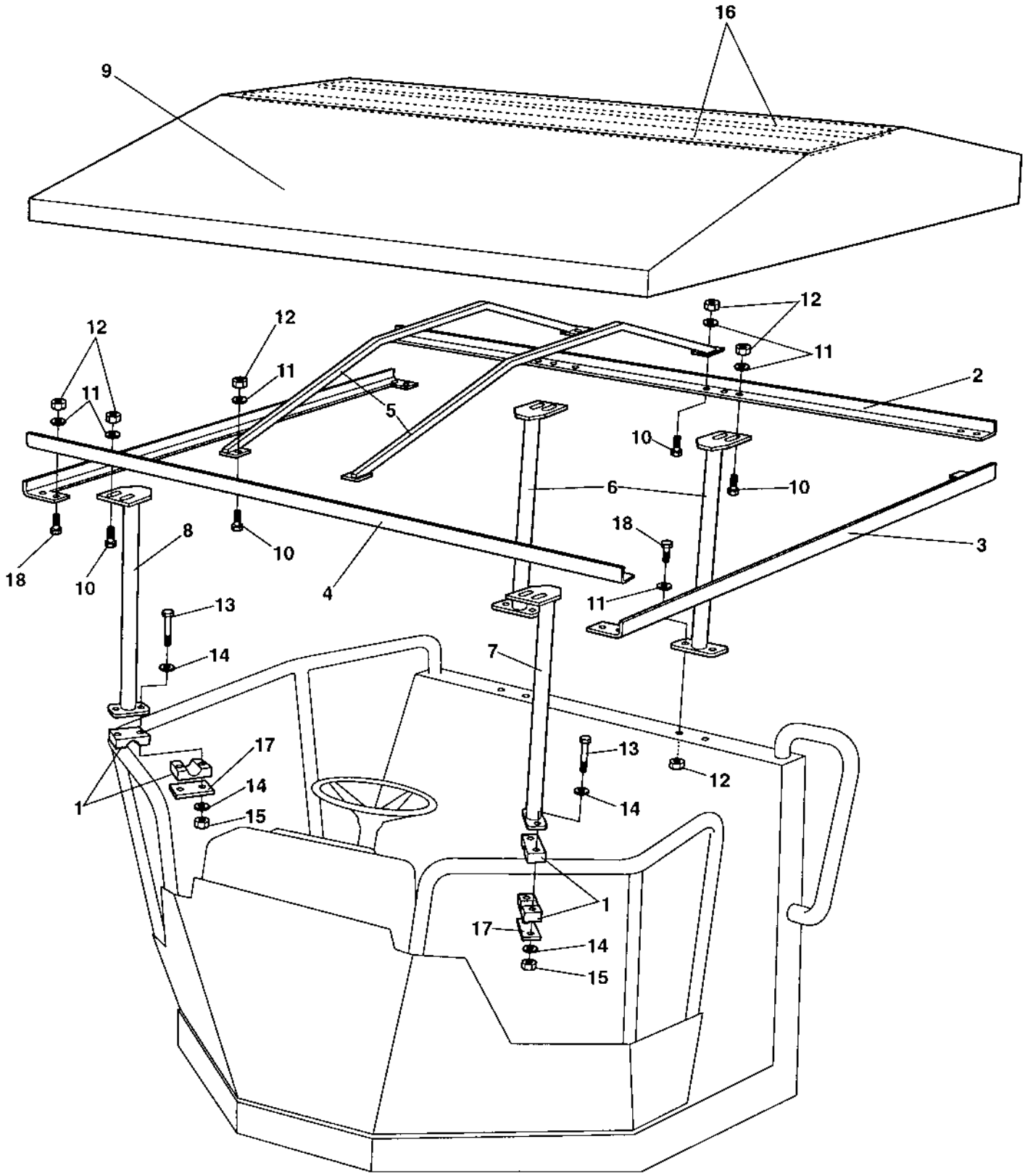

Canopy Option

Item	Part No	Rem	Qty	Description	Code
1	4700904340		2	Pipe clamp	
2	4700373746		1	Canopy profile	
3	4700373747		2	Canopy profile	D
4	4700373748		1	Canopy profile	
5	4700373749		4	Canopy rib	D
6	4700373750		2	Canopy anchor	
7	4700380963		1	Canopy anchor	
8	4700380964		1	Canopy anchor	
9	4700373906		1	Roof	D
10	4700500021		16	Screw M8-1,25x25 8.8	C
11	4700904229		44	Washer 8,4x16x1,5	C
12	4700586003		22	Lock nut M8	C
13	4700500153		4	Screw	C
14	4700904228		8	Washer 6,4x12x1,5	C
15	4700586002		4	Lock nut M6 -8	C
16	4700373907		2	Lath	D
17	4700924791		2	Cover plate	
18	4700500022		8	Screw M8x30H 8.8 A2K	C

Rops and fops

17483

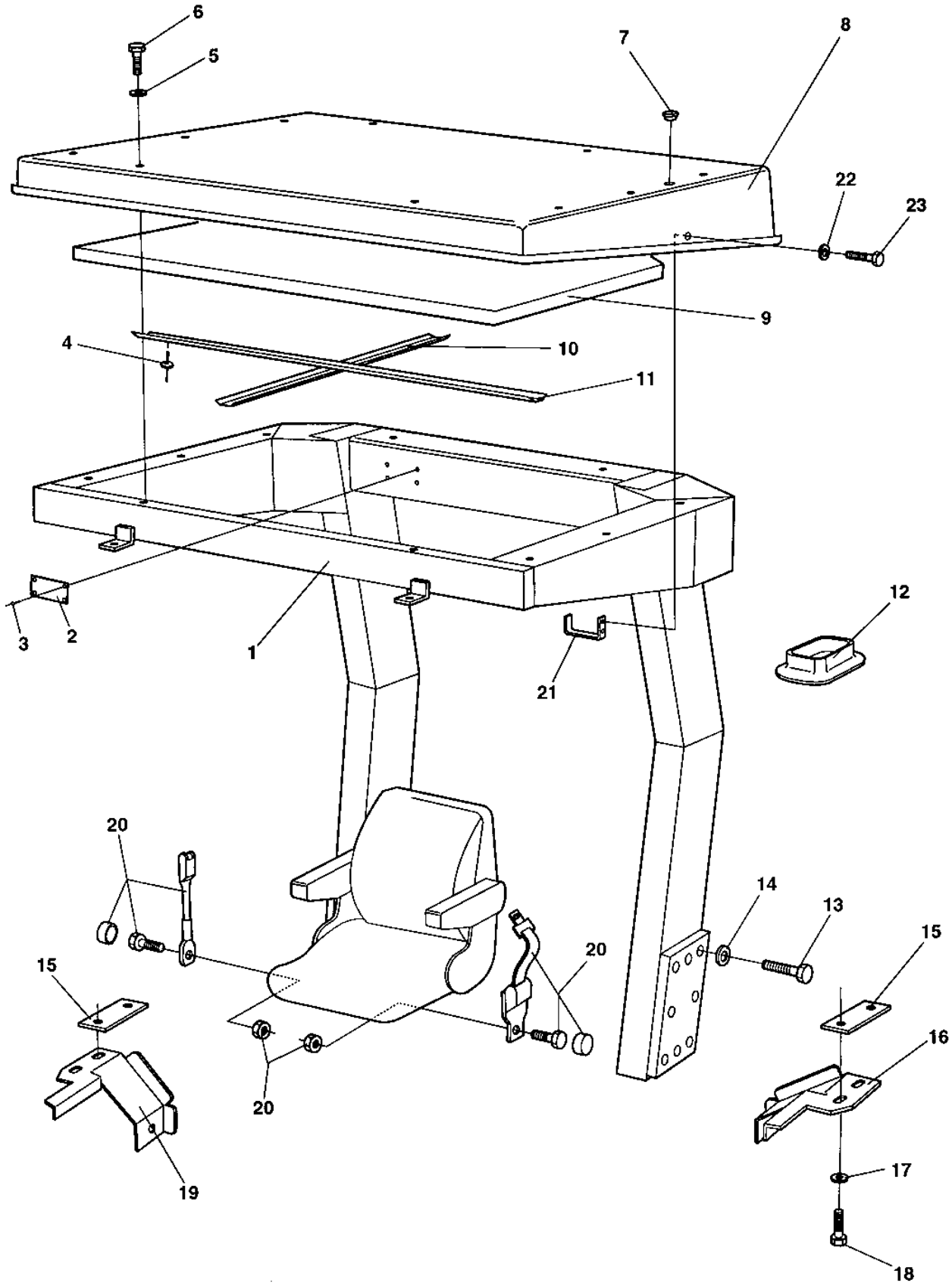

Rops and fops

Item	Part No	Rem	Qty	Description	Code
1	4700373943		1	Rops	
2	4700370803		1	. Sign, rops	
3	4700624016		4	. Blind rivet	C
4	4700904619		12	Blind rivet	C
5	4700904734		19	Washer 8,4x26x4	C
6	4700500239		19	Screw	C
7	4700904180		4	Plug	C
8	4700372745		1	Fops roof	
	4700370792		1	. Sign, fops	
	4700624016		4	. Blind rivet	C
9	4700372678		1	Absorbent	
10	4700376489		1	Absorbent holder	
11	4700376488		1	Absorbent holder	D
12	4700372489		2	Rubber seal	
13	4700500226		12	Screw M20-2.5x180 8,8	C
14	4700904233		12	Steel plain washer	C
15	4700381330		2	Holder	
16	4700381353		1	Holder plate	
17	4700904640		8	Washer 8,4x22x3	C
18	4700500022		8	Screw M8x30H 8.8 A2K	C
19	4700381352		1	Holder plate	
20	4700377677		1	Seat belt 2"	B
	4700379637	A	1	Seat belt 3"	B
21	4700383225		2	Hook	
22	4700904734		4	Washer 8,4x26x4	C
23	4700500100		4	Screw	

A) Option 3"

Cab mounting

17526

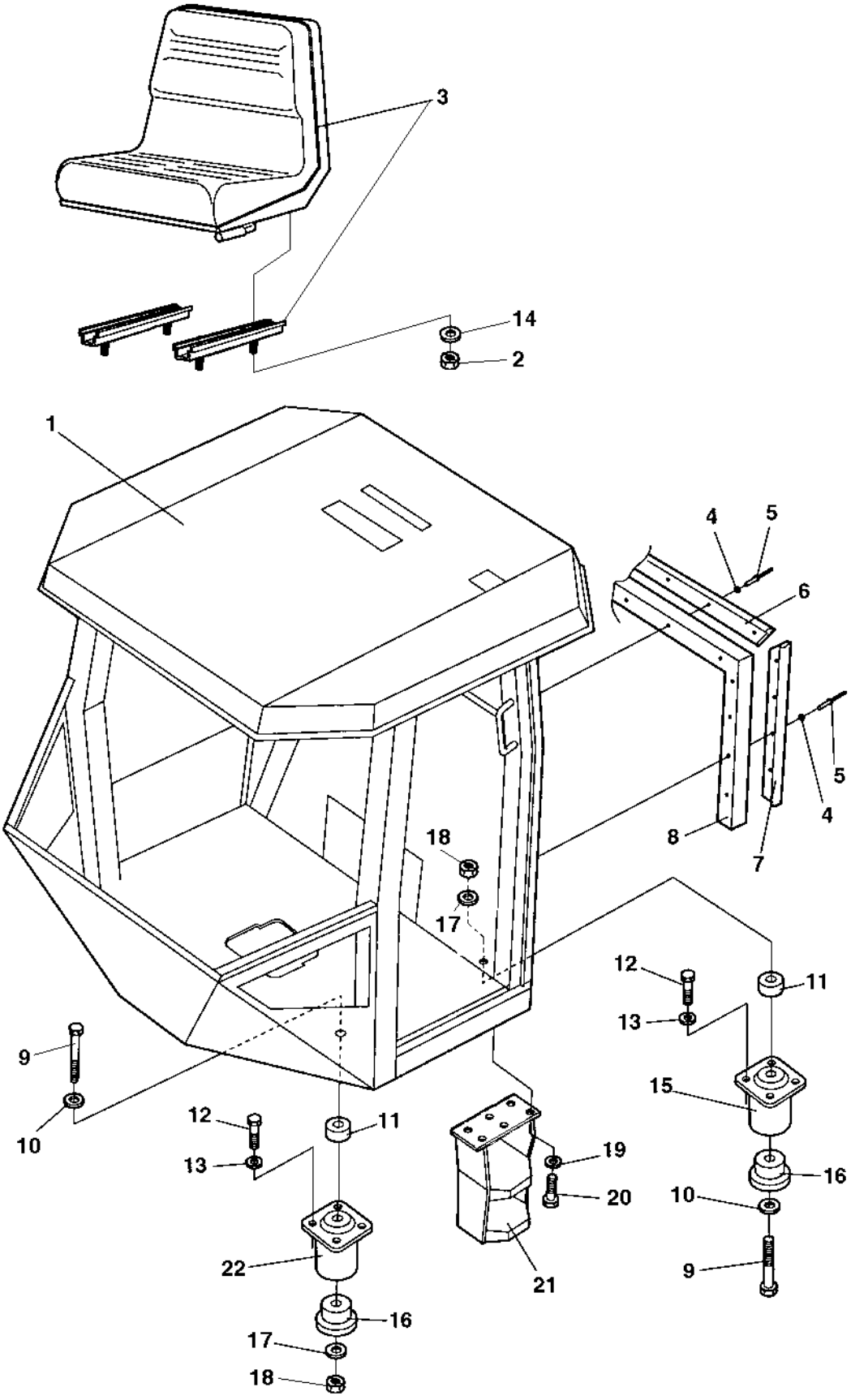

Cab mounting

Item	Part No	Rem	Qty	Description		Code
1				Cab 392479 (Page 144)		
2	4700570005		4	Nut M8		C
3	4700377556		1	Drivers seat, cpl		
	4700377518	D	1	Drivers seat, cpl		D
4	4700927974		13	Washer		
5	4700904433		13	Blind rivet		
6	4700372785		1	List		
7	4700382582		2	List		
8	4700372494	A	N	Rubber strip		
9	4700791218		4	Screw M20x200		
10	4700904233		4	Steel plain washer		C
11	4700384759		4	Spacer		
12	4700500195		16	Screw		C
13	4700904231		16	Steel plain washer		C
14	4700904229		4	Washer 8,4x16x1,5		C
15	4700374606	B	2	Shock absorber	Green	D
16	4700372457		4	Back-up ring		
17	4700903290		4	Washer 21x36x6		C
18	4700901145		4	Lock nut M20-10		
19	4700904230		6	Steel plain washer		C
20	4700500029		6	Hexagon head screw		C
21	4700376255		1	Step		
22	4700374607	C	2	Shock absorber	Yellow	D
23	4700382397		2	Spacer		

A) L=2400 mm
B) Rear
C) Front
D) Option

Cab 392479

Item	Part No	Rem	Qty	Description	Code
130				Cab Screens (Page 146)	
140				Cab Door, left side (Page 150)	
150				Cab Interior rear mirror (Page 152)	
170				Wiper arm with blade, front (Page 154)	
180				Cab Electric (Page 156)	

Cab Screens

18429

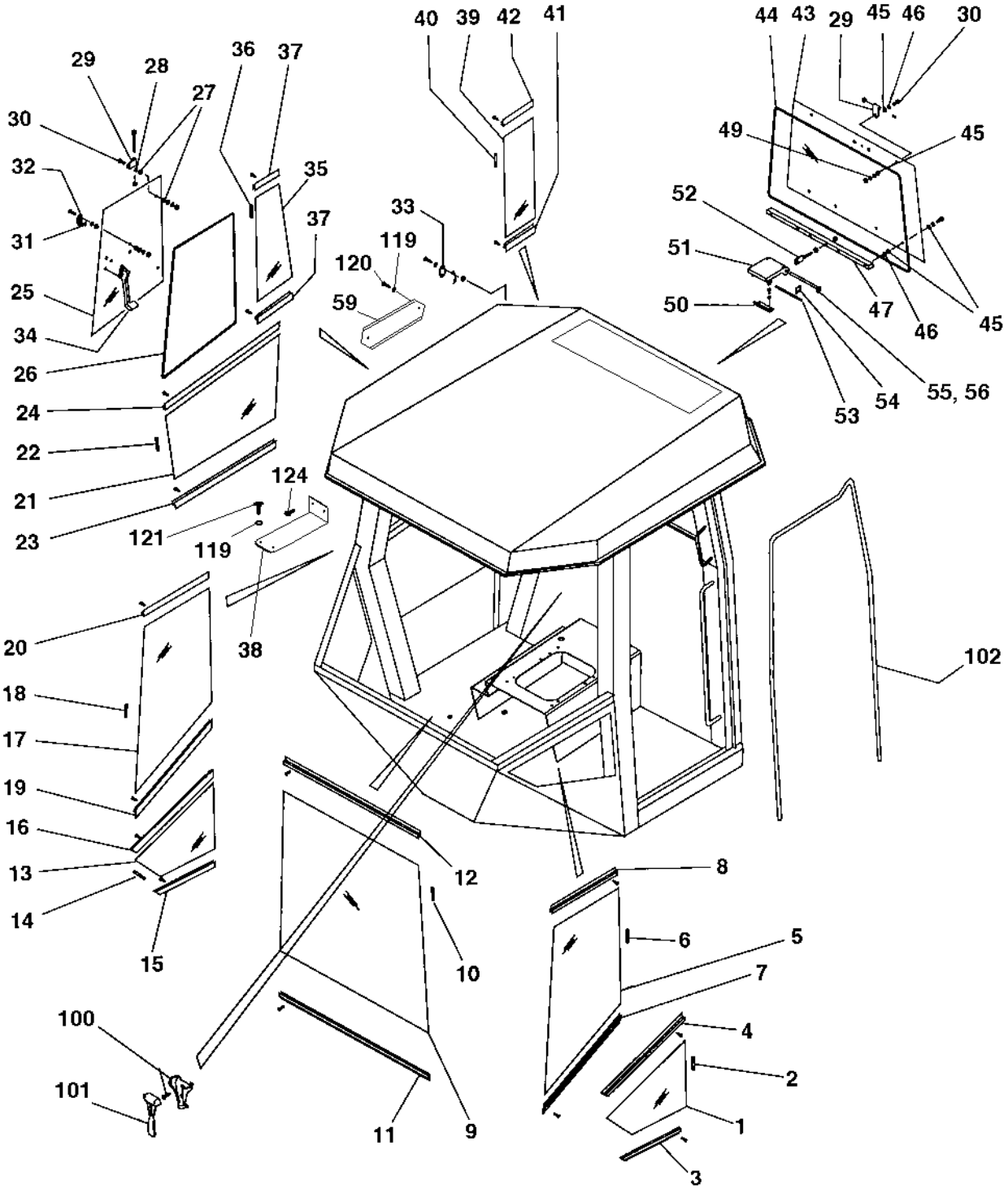

Cab Screens

Item	Part No	Rem	Qty	Description	Code
1	4700937380		1	Screen	
2	4700908545		XL	Seal list	B
3	4700935278		1	List	
4	4700935279		1	List	
5	4700937381		1	Screen, left	
6	4700908545		XL	Seal list	B
7	4700935280		1	List	
8	4700935281		1	List	
9	4700937382		1	Screen	
10	4700908545	D	1	Seal list	B
11	4700935282		1	List	
12	4700935283		1	List	
13	4700937383		1	Screen	
14	4700908545		XL	Seal list	B
15	4700935284		1	List	
16	4700935285		1	List	
17	4700937384		1	Screen	
18	4700908545	C	1	Seal list	B
19	4700935286		1	List	
20	4700935287		1	List	
21	4700937385		1	Screen	
22	4700908545	A	1	Seal list	B
23	4700935288		1	List	
24	4700935289		1	List	
25	4700938290		1	Screen	
26	4700908499	E	1	Rubber list	C
27	4700935271		8	Washer, Flexible rubber	
28	4700935272		8	Washer, Black	
29	4700935273		4	Hinge	
30	4700935274		4	Screw	
31	4700935275		1	Rubber washer	
32	4700935276		1	Bracket	
33	4700935277		1	Lock pin	
34	4700935290		1	Window lock, right	
35	4700938291		1	Screen	
36	4700908545	B	1	Seal list	B
37	4700935291		1	List	
38	4700379608		1	Cover	
39	4700938292		1	Screen	
40	4700908545	B	1	Seal list	B
41	4700935293		1	List	
42	4700938659		1	List	
43	4700937389		1	Screen	
44	4700908499	F	1	Rubber list	C
45	4700935271		12	Washer, Flexible rubber	
46	4700935272		12	Washer, Black	
47	4700935295		1	Screen holder	
49	4700935296		2	Washer	
50	4700935297		1	Bracket	
51	4700935298		2	Bracket	
52	4700935299		1	Bolt	
53	4700935300		1	Shaft	
54	4700935301		2	Lock	

A) L=1100 mm
B) L=1400 mm
C) L=1900 mm
D) L=2100 mm
E) L=2700 mm
F) L=3300 mm

Cab Screens

18431

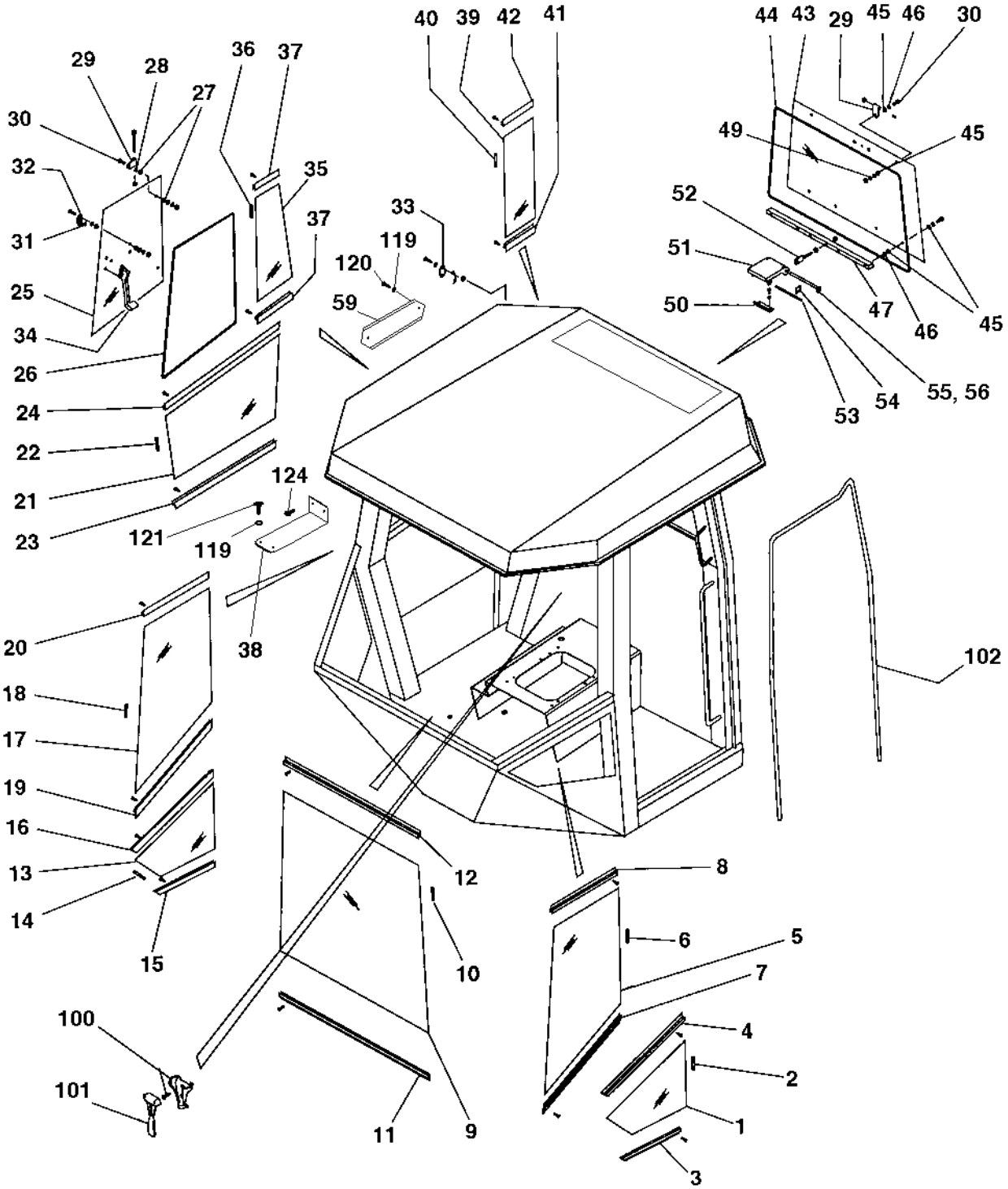

Cab Screens

Item	Part No	Rem	Qty	Description	Code
55	4700935302		1	Rod	
56	4700935303		1	Ring	
59	4700379236		1	Cover	
100	4700908506		1	Holder	C
101	4700908507		1	Emergency hammer	D
102	4700908499	G	1	Rubber list	C
119	4700904229		16	Washer 8,4x16x1,5	C
120	4700500019		14	Screw M8x16H 8.8 A2K	C
121	4700500053		2	Screw M8x20H 8.8	C
124	4700903782		2	Screw M5x12	C

G) L=5 m

Cab Door, left side

18431

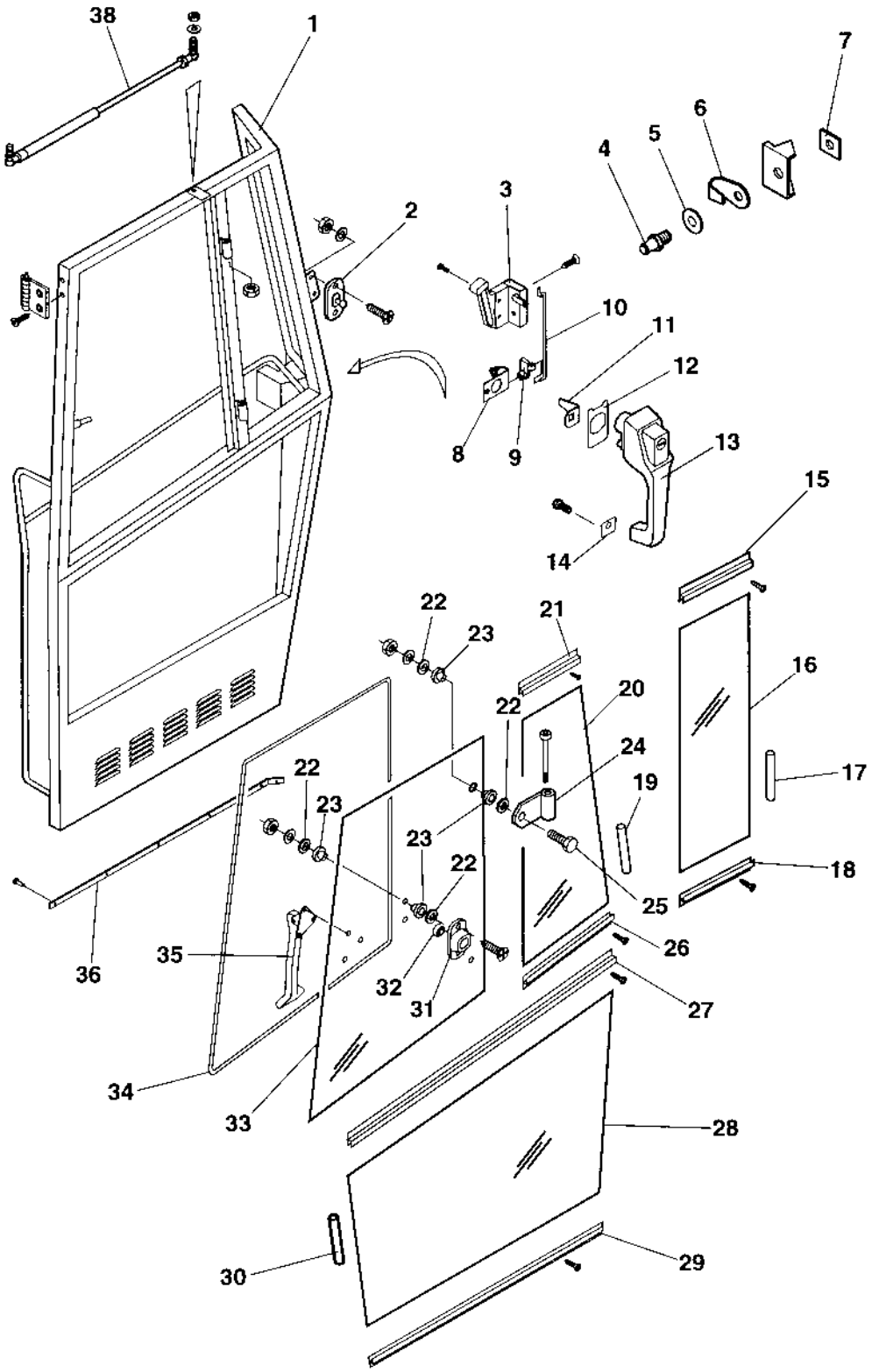

Cab Door, left side

Item	Part No	Rem	Qty	Description	Code
	4700940678		1	Door, cpl	
1	4700390927		1	. Door frame	
2	4700935277		1	. Lock pin	
3	4700938017		1	. Lock	
4	4700908580		1	. Lock pin	C
5	4700908581		1	. Washer	C
6	4700908582		1	. Cover	D
7	4700908583		1	. Bracket	D
8	4700935248		1	. Turning mechanism	
9	4700935249		1	. Retainer	
10	4700935250		1	. Rod	
11	4700935247		1	. Leader	
12	4700935246		1	. Seal	
13	4700935244		1	. Door handle with key	D
14	4700935245		1	. Seal	
15	4700935268		1	. List	
16	4700937391		1	. Screen	
17	4700908545	A	1	. Seal list	B
18	4700935267		1	. List	
19	4700908545	A	1	. Seal list	B
20	4700937392		1	. Screen	
21	4700935270		1	. List	
22	4700935272		8	. Washer, Black	
23	4700935271		8	. Washer, Flexible rubber	
24	4700935273		2	. Hinge	
25	4700935274		2	. Screw	
26	4700935269		1	. List	
27	4700935266		1	. List	
28	4700937390		1	. Screen	
29	4700935265		1	. List	
30	4700908545	B	1	. Seal list	B
31	4700935276		1	. Bracket	
32	4700935275		1	. Rubber washer	
33	4700937393		1	. Screen	
34	4700908499	C	1	. Rubber list	C
35	4700935253		1	. Lock	
36	4700938101		XL	. Brush profile	
38	4700938018		1	. Gas spring	

A) L=1400 mm
B) L=1100 mm
C) L=2700 mm

Cab Interior rear mirror

16967-1

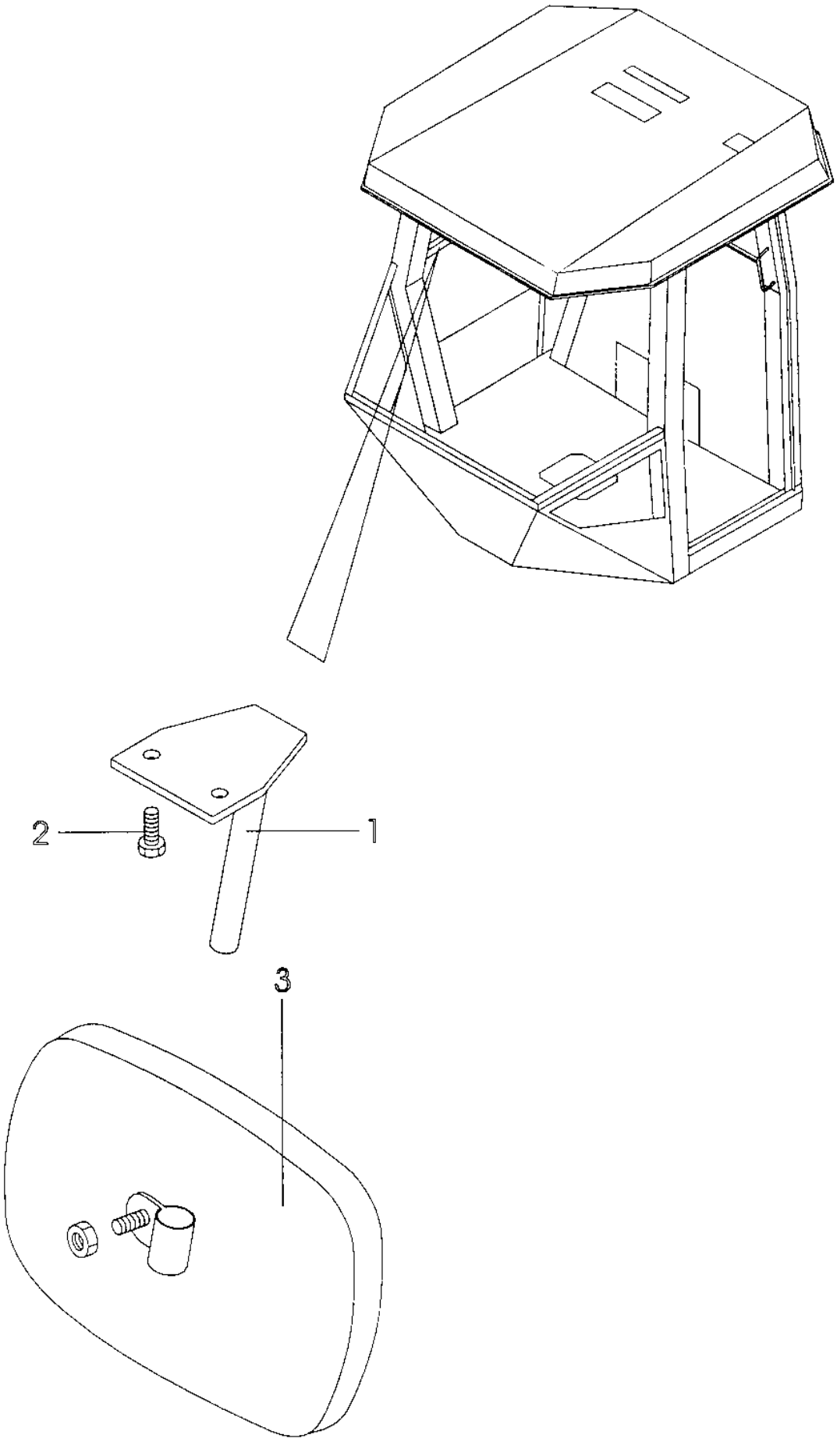

Cab Interior rear mirror

Item	Part No	Rem	Qty	Description	Code
1	4700908623		1	Bracket	D
2	4700535005		2	Screw M5x12	C
3	4700908624		1	Rear mirror	C

Wiper arm with blade, front

16008

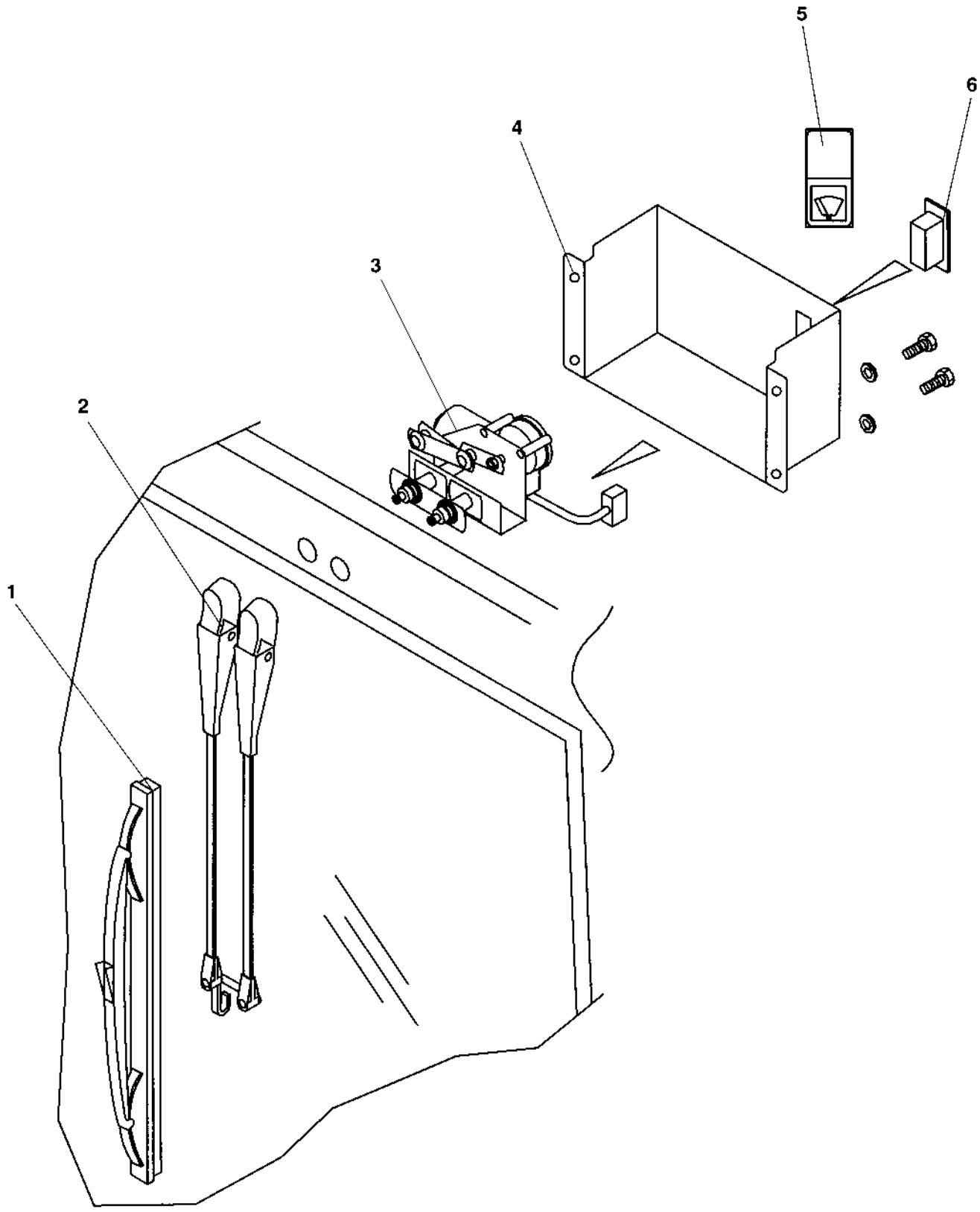

Wiper arm with blade, front

Item	Part No	Rem	Qty	Description	Code
1	4700905306		1	Wiper blade	
2	4700905305		1	Wiper arm	
3	4700905304		1	Wiper motor	
4	4700937871		1	Cover	
5	4700908605		1	Symbol, wiper	D
6	4700908617		1	Switch	B

Cab Electric

16968

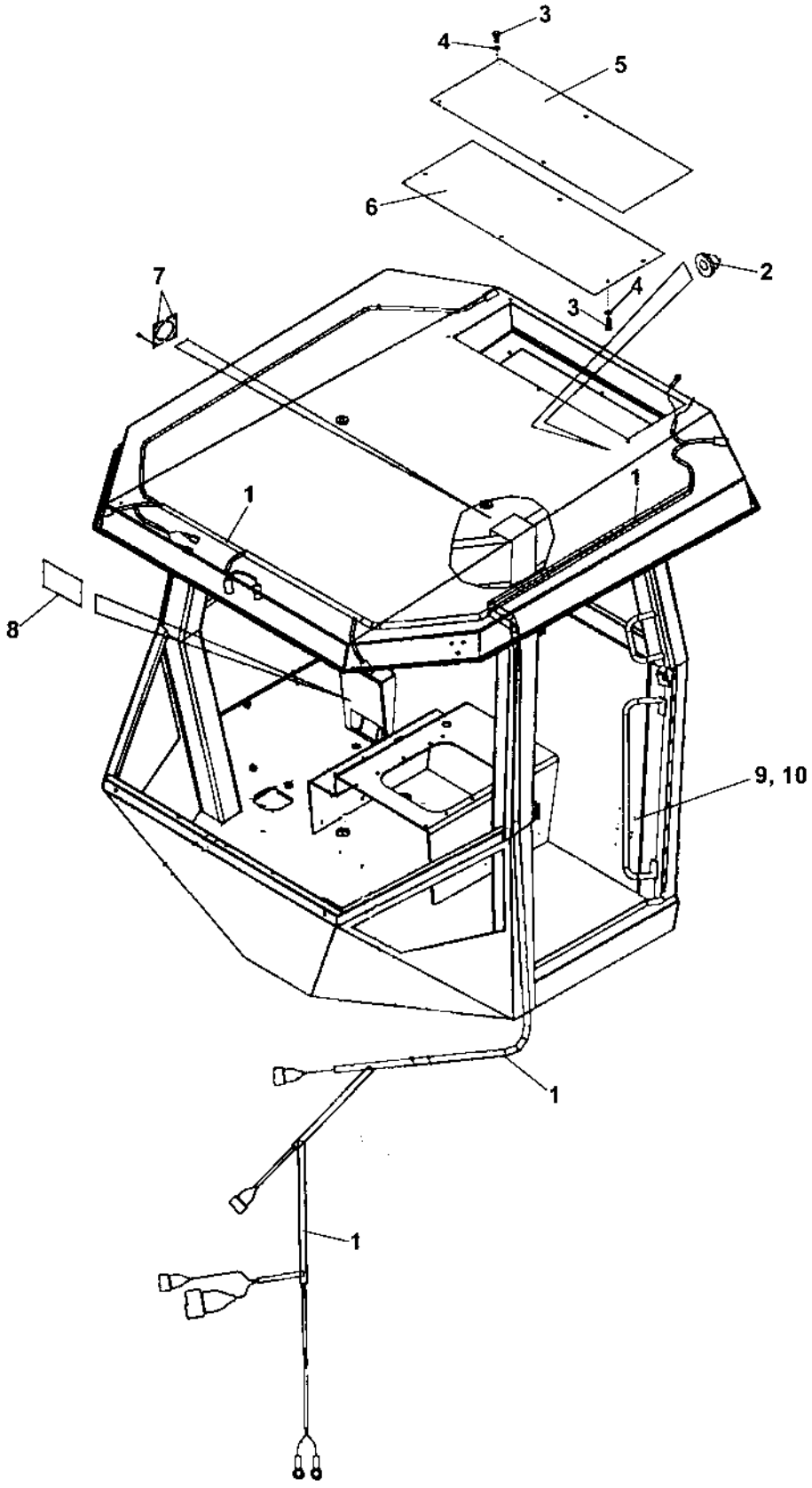

Cab Electric

Item	Part No	Rem	Qty	Description	Code
1	4700937870		1	Cable harness	
2	4700791378		2	Grommet	
3	4700500019		12	Screw M8x16H 8.8 A2K	C
4	4700904229		12	Washer 8,4x16x1,5	C
5	4700938678		1	Cover	D
6	4700938679		1	Cover	D
7	4700935580		2	Bracket	
8	4700391219		1	Gasket	
9			1	Sign, rops	
10			1	Sign, fops	

Decals

Decals

Item	Part No	Rem	Qty	Description	Code
10				Decals (Page 160)	
20				Decals (Page 162)	

Decals

18780

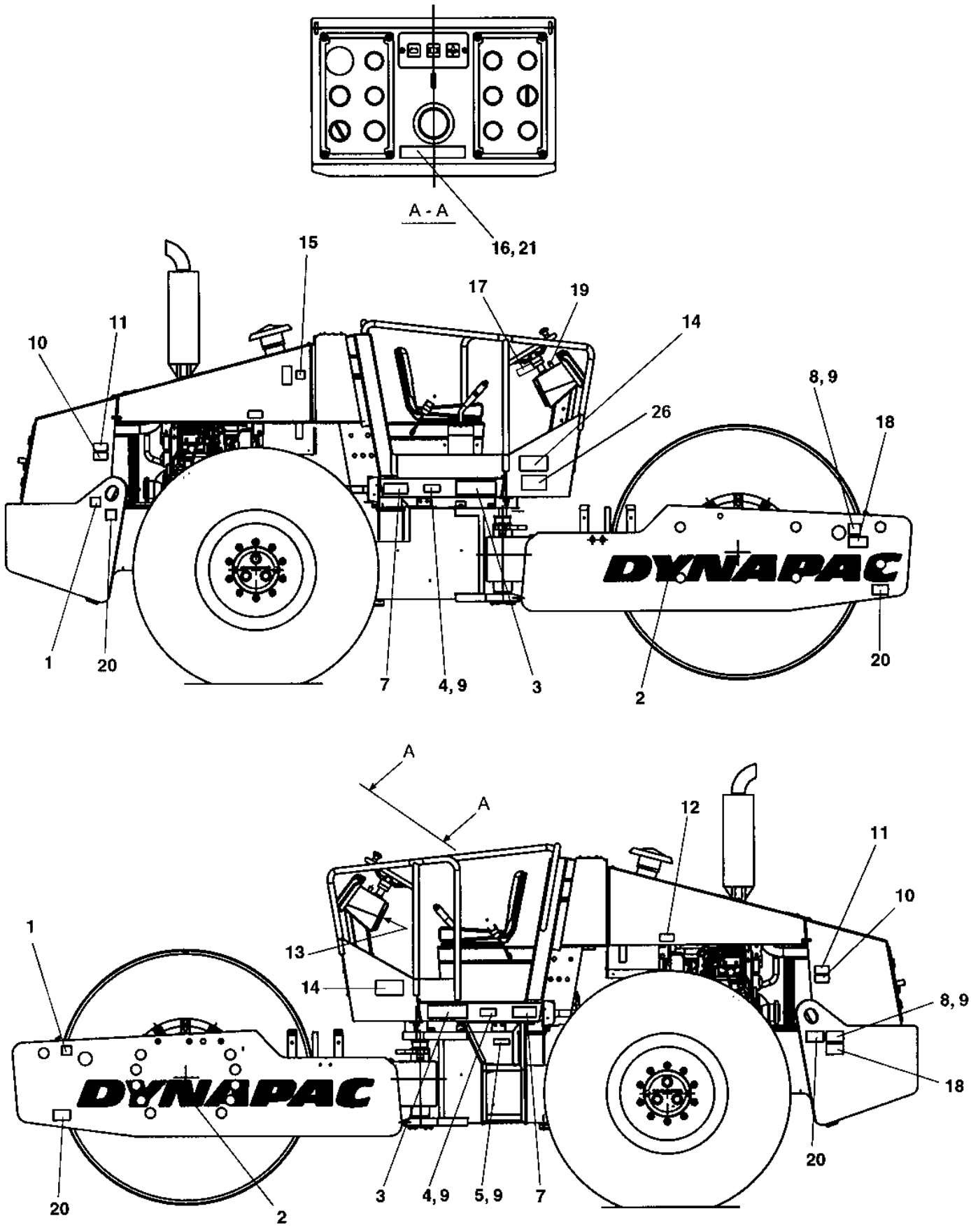

Decals

Item	Part No	Rem	Qty	Description	Code
1	4700588176		2	Decal "LIFT POINT"	
2	4700904098		2	Decal "DYNAPAC" L=1350 mm	
3	4700791161		2	Decal "MODEL CODE"	
4	4700377744		2	Reflector, yellow	D
5			1	Product identification plate	D
		A,C	1	Product identification plate CE	D
		B,C	1	Product identification plate	D
7	4700903459		2	Decal "SAFETY"	D
8	4700904870		2	Lifting sign	D
9	4700624005		12	Blind rivet 3,2x6,1	C
10	4700903424		2	Decal "HOT SURFACE"	D
11	4700903423		2	Decal "SAFETY"	D
12	4700385080		2	Decal "TYRE PRESSURE" 150-170kPa/21-24psi	
13	4700903425		1	Decal "SAFETY MANUAL"	D
14	4700903422		2	Decal "SAFETY"	D
15	4700272373		1	Decal "HYDRAULIC OIL"	D
16	47386084SE		1	Warning plate Swedish	
	47386084EN		1	Warning plate English	
	47386084DE		1	Warning plate German	
	47386084IT		1	Warning plate Italian	
	47386084ES		1	Warning plate Spanish	
	47386084FR		1	Warning plate French	
	47386084NO		1	Warning plate Norwegian	
	47386084DK		1	Warning plate Danish	
	47386084FI		1	Warning plate Finnish	
	47386084PT		1	Warning plate Portuguese	
	47386084NL		1	Warning plate Dutch	
	47386084GR		1	Warning plate Greek	
	47386084IS		1	Warning plate Icelandic	
	47386084CN		1	Warning plate Chinese	
	47386084BR		1	Warning plate Brazil	
17	4700384159		1	Instructions Loading-Unloading	
18	4700908229		2	Safety decal	D
19	4700358881		1	Pad lock	D
20	4700382751		4	Decal "TIE DOWN POINT"	D
21	4700624017		4	Blind rivet	C
22	4700791277		1	Decal "Sound power level" 107dB	D
	4700791276		1	Decal "Sound power level" 106dB	D
25	4700791642		1	Decal "WARNING" Use of starting fluid prohib.	D

A) With CE-Mark
B) With "Year of Mfg"
C) Not available as sparepart

Decals

16956-1

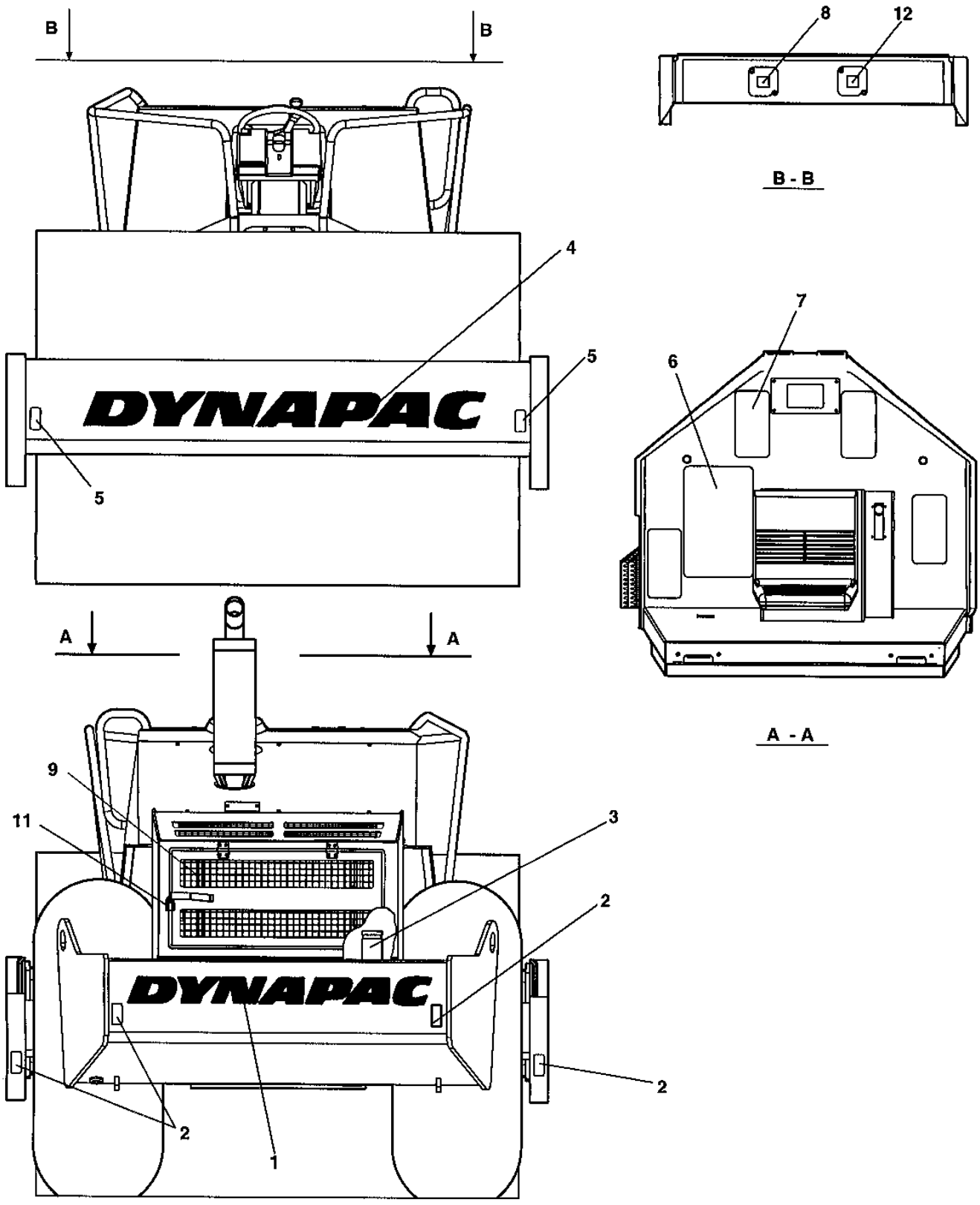

Decals

Item	Part No	Rem	Qty	Description	Code
1	4700904093		1	Decal "DYNAPAC" L=1010 mm	
2	4700377742		4	Reflector, red	D
3	4700991658		1	Decal "FUEL"	D
4	4700904098		1	Decal "DYNAPAC" L=1350 mm	
5	4700377743		2	Reflector, white	D
6	4700373364		1	Slip protection	
7	4700373363		4	Slip protection	
8	4700272372		1	Decal "HYDRAULIC OIL"	D
9	4700904835		1	Decal "BATTERY POWER"	D
11	4700358881		1	Pad lock	D
12	4700388449		1	Decal "Engine coolant fill"	

Standard equipment

Item	Part No	Rem	Qty	Description	Code
10				Standard equipment (Page 166)	

Standard equipment

16957-2

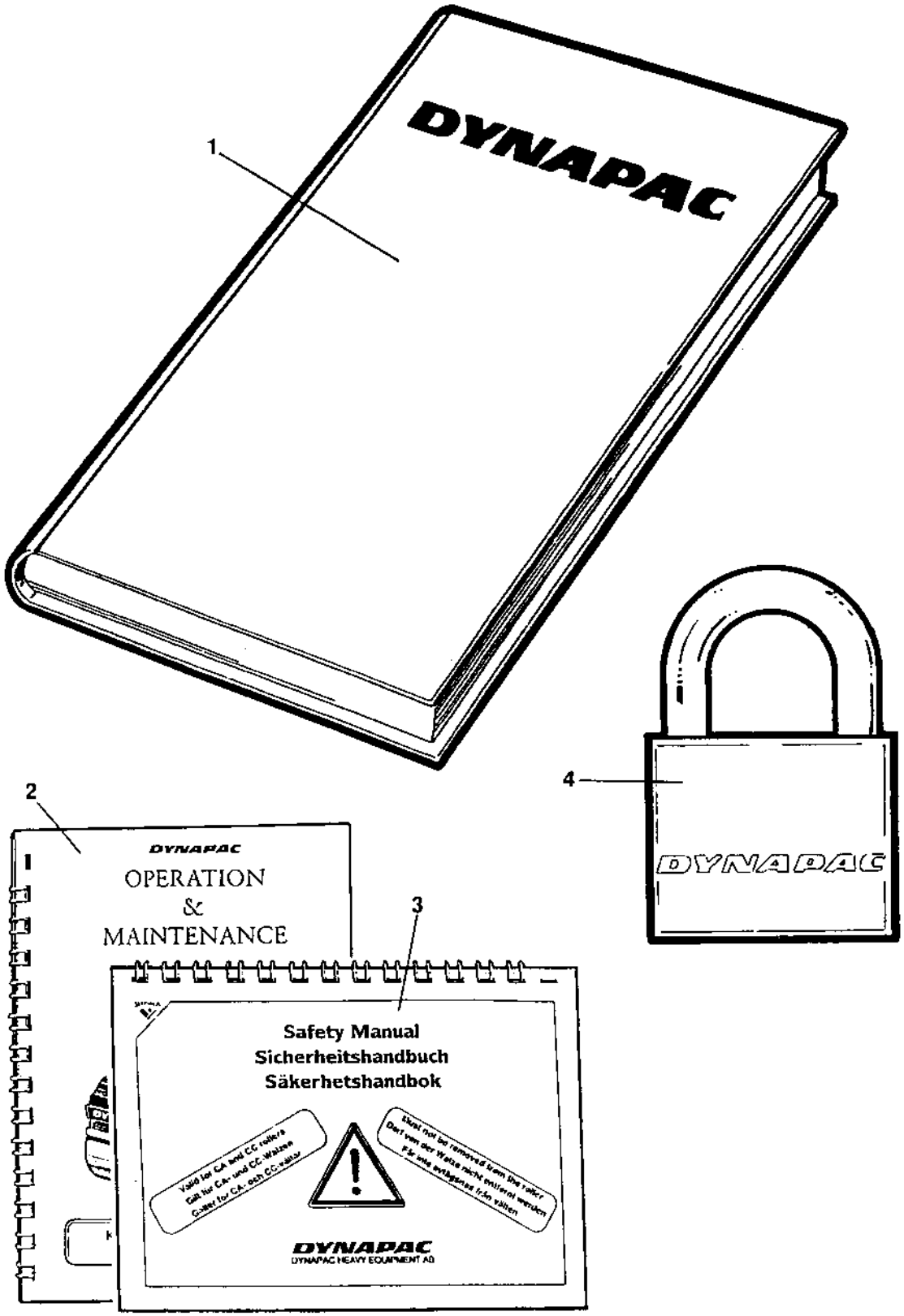

Standard equipment

Item	Part No	Rem	Qty	Description	Code
1			1	Documentation ISCA150PD	
			1	. Warranty registration card	
			1	. Spare parts catalogue SCA150PD	
			1	. Instruction manual Cummins QSB 3.3	
2			1	. Operation / maintenance instruction ICA150	
3			1	. Safety manual RSAFE	
4	4700358881		1	Pad lock	D

Optional equipment

Item	Part No	Rem	Qty	Description	Code
10				Tool equipment (Page 170)	
110				Dy-Mic (Page 172)	
120				Heater, Simple cab (Page 174)	

Tool equipment

15639-1

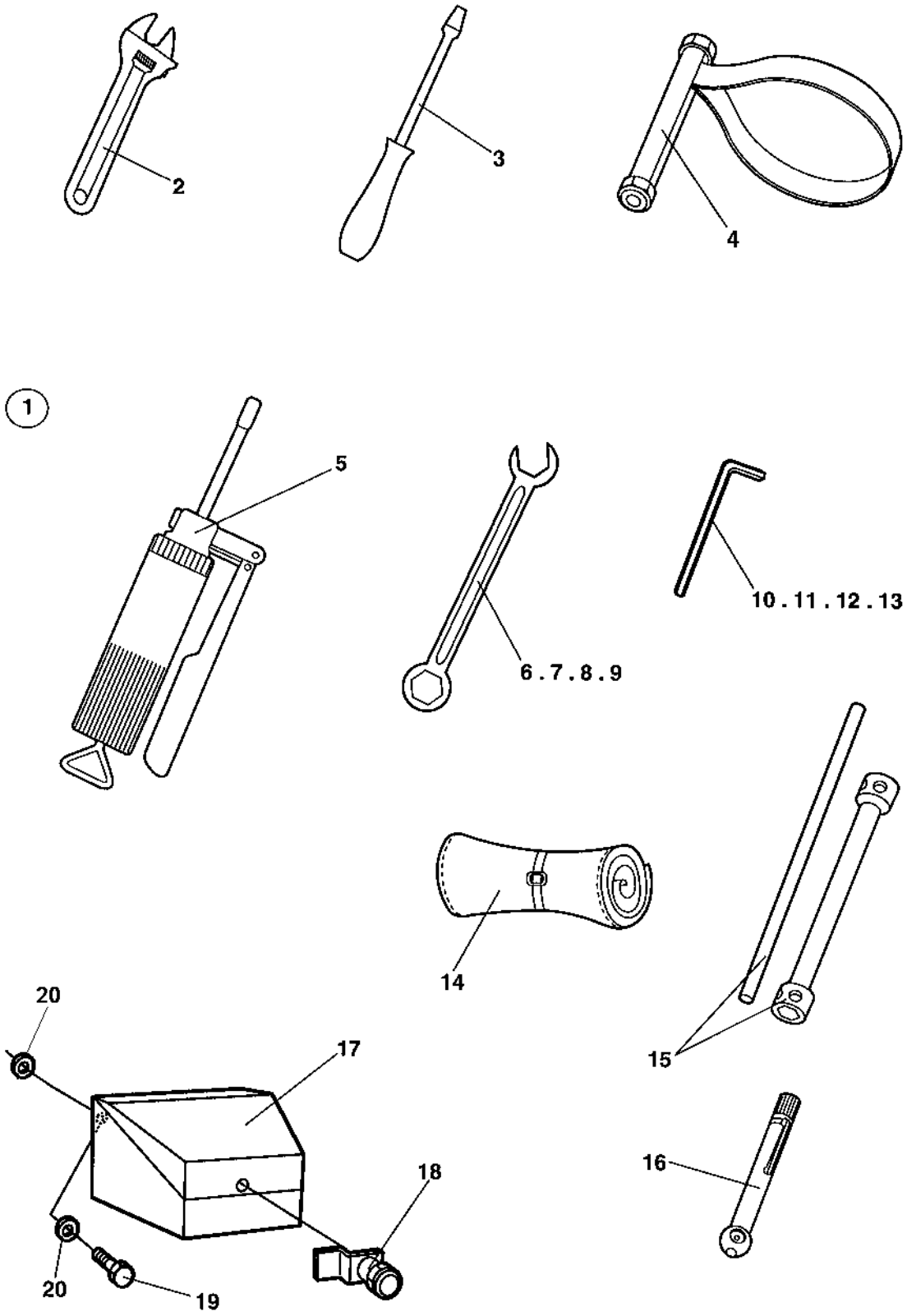

Tool equipment

Item	Part No	Rem	Qty	Description	Code
1	4700355890		1	Tool set Cpl	
2			1	. Adjustable wrench	
3			1	. Screw driver	
4	4700902610		1	. Belt pliers	D
5	4700311016		1	. Grease gun	D
6			1	. Open end spanner 10mm	D
7			1	. Open end spanner 13mm	D
8			1	. Open end spanner 16mm	D
9			1	. Open end spanner 18mm	D
10			1	. Allen wrench 10mm	D
11			1	. Allen wrench 12mm	D
12			1	. Allen wrench 6mm	D
13			1	. Allen wrench 8mm	D
14			1	. Tool bag	D
15			1	. Wheel nut key 30/32mm	D
16	4700901220		1	. Pressure gauge	B
17	4700372837		1	Tool box	
18	4700372658		1	. Lock	D
19	4700500021		3	Screw M8-1,25x25 8.8	C
20	4700904640		6	Washer 8,4x22x3	C

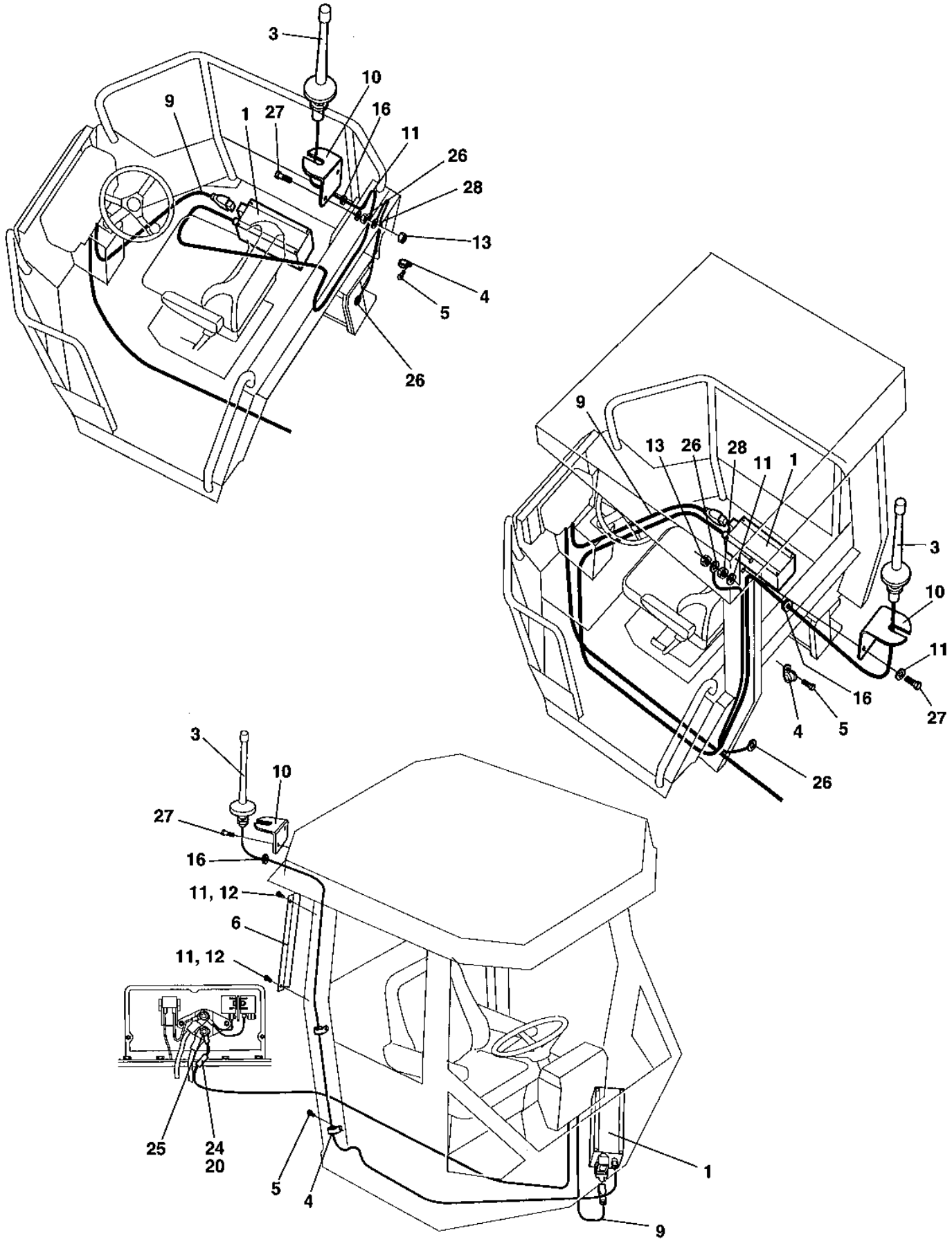
3
10
9
1
27
16
11
26
28
13
4
5
26
9
13
26
28
11
1
3
10
11
16
27
4
5
26
3
10
27
16
11, 12
6
11, 12
25
24
20
5
4
1
9

Dy-Mic

Item	Part No	Rem	Qty	Description	Code
1	4700386390		1	Communicator box	
	4700508002		4	Screw M6x16	
3	4700386391		1	Antenna Cpl	
4	4700921039		4	Pipe clamp	C
5	4700904415		4	Screw	
6	4700386512		1	Cable holder	
9	4700386392		1	Cable harness	
10	4700386506		1	Antenna holder	
11	4700904228		2	Washer 6,4x12x1,5	C
12	4700500040		2	Screw M6-1x20 8,8	C
13	4700586002		4	Lock nut M6 -8	C
16	4700909122		1	Grommet	C
17	4700313102		N	Cable ties	C
18	4700313041		N	Cable ties	C
20	4700901224		1	Fuse 3A	A
24	4700904015		1	Fuse holder	D
25	4700960067		1	Cable clip	
26	4700387797		1	Ground cable	
27	4700541702		2	Screw M6x12	C
28	4700570004		1	Nut M6X1,00 -8 A2K	C

Heater, Simple cab

17823-1

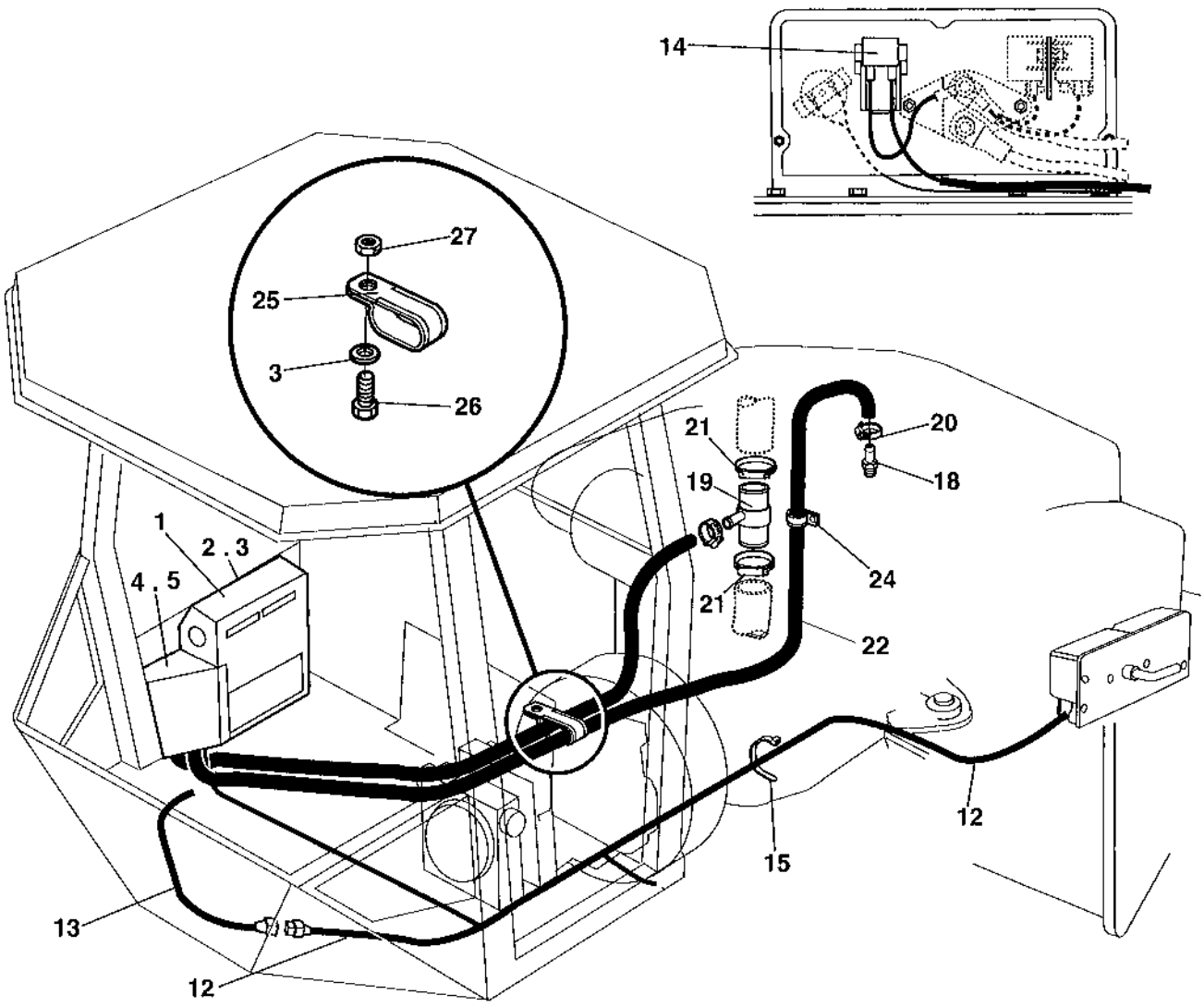

Heater, Simple cab

Item	Part No	Rem	Qty	Description	Code
1	4700379394		1	Heater box (Page 176)	
2	4700500019		4	Screw M8x16H 8.8 A2K	C
3	4700904229		5	Washer 8,4x16x1,5	C
12	4700387466		1	Cable harness	
13	4700387467		1	Cable harness	
14	4700904039		1	Fuse 50A Red High	A
15	4700313102		N	Cable ties	C
18	4700386693		1	Adapter	
19	4700379609		1	T-connector	
20	4700313004		4	Hose clamp	C
21	4700313010		2	Hose clamp	C
22	4700937737	A	2XL	Hose	
24	4700921132		1	Clamp	C
25	4700283711		1	Hose clamp	
26	4700500021		1	Screw M8-1,25x25 8.8	C
27	4700904556		1	Washer 8,4x16x3,0	C

A) L=3600 mm

4700379394 Heater box

18164-1

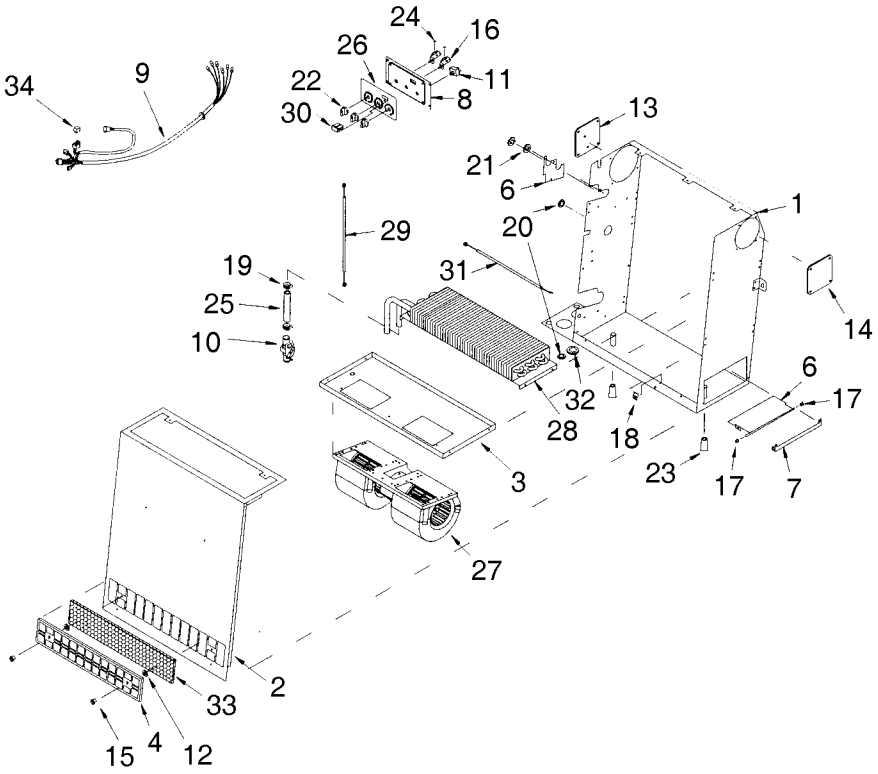

4700379394 Heater box

Item	Part No	Rem	Qty	Description	Code
10	4700939693		1	. Heater control valve	
11	4700938622		1	. Switch	B
16	4700938621		2	. Rotary control	
19	4700313003		2	. Hose clamp	D
24	4700385134		2	. Lock washer	
25	4700384881	A	1	. Hose	
27	4700938638		1	. Fan	C
28	4700938639		1	. Heater coil	
29	4700938645		1	. Bowden cable	
31	4700384762		1	. Wire	
33	4700384761		1	. Air filter element	
34	4700287597		1	. Relay	D

A) L=200 mm

NUMERICAL INDEX

Part Number	Page	Part Number	Page	Part Number	Page
4700100040	19,33	4700330383	43	4700371594	57
4700114036	21,39	4700334122	71,83	4700371774	45
4700116041	23,39	4700334138	73	4700372029	91
4700160105	21,23,39	4700334140	73	4700372044	91
4700160157	83,99	4700334196	111	4700372229	9,15,73
4700160234	83	4700334199	89	4700372457	143
4700160279	83	4700334205	83,97	4700372479	29
4700160344	21,39	4700334389	97	4700372489	141
4700160362	21,39	4700334468	73	4700372494	129,143
4700162008	73	4700334524	97	4700372513	89
4700162017	39	4700335914	71,83	4700372514	89
4700162018	39	4700336742	25,39	4700372635	39
4700162019	43	4700337042	33	4700372639	39
4700167023	21,39	4700337045	19,33	4700372641	39
4700167032	19,33	4700338304	89	4700372658	171
4700202028	35	4700340863	87	4700372678	141
4700202043	45	4700343159	33	4700372745	141
4700205027	45	4700343318	39	4700372757	129
4700212346	77	4700343322	39	4700372784	125
4700212353	75	4700343462	39	4700372785	129,143
4700230515	43	4700343550	117	4700372836	125
4700232039	91	4700343561	39	4700372837	171
4700232097	89	4700343732	71,83	4700372964	137
4700233304	91	4700343744	39	4700373016	125
4700234243	73	4700343775	29	4700373096	125
4700234382	83	4700343801	39	4700373134	83
4700234388	111	4700343872	71	4700373140	125
4700234622	111	4700343907	39	4700373184	119
4700234626	89	4700345243	73	4700373270	71,83
4700234662	89	4700345871	19,33	4700373363	163
4700234843	97	4700345872	19,33	4700373364	163
4700234875	73	4700345873	19,33	4700373395	71
4700234888	97	4700345874	19,33	4700373396	83
4700234909	73	4700345875	19,33	4700373400	129
4700234919	51	4700347119	29	4700373421	33
4700234958	73	4700347512	129	4700373423	71
4700238158	117	4700348213	125	4700373460	29,51
4700244054	51	4700348309	49	4700373507	83
4700246069	45	4700349211	71,83	4700373574	51
4700272372	163	4700349435	125	4700373624	53
4700272373	161	4700349715	39	4700373625	53
4700283711	175	4700349879	91	4700373746	139
4700287597	177	4700349880	91	4700373747	139
4700310008	19	4700355869	137	4700373748	139
4700311016	171	4700355890	171	4700373749	139
4700313001	51	4700356348	111	4700373750	139
4700313002	51	4700357138	15,91	4700373774	83
4700313003	177	4700357488	29	4700373906	139
4700313004	175	4700357643	129	4700373907	139
4700313006	45	4700357855	131	4700373943	141
4700313008	45	4700358388	77,81	4700374028	111
4700313010	45,175	4700358452	121	4700374029	119
4700313041	51,115,125,173	4700358881	161,163,167	4700374030	119
4700313075	45	4700359403	43	4700374059	73
4700313093	53	4700359550	73	4700374398	121
4700313094	53	4700359551	73	4700374606	143
4700313102	73,83,111,125,173	4700359552	73	4700374607	143
	175	4700370229	43	4700374779	39
4700330170	51	4700370231	39	4700374836	39
4700330171	51	4700370365	39	4700374869	29
4700330331	43	4700370792	141	4700374900	33
4700330333	109	4700370803	141	4700374907	39

NUMERICAL INDEX

Part Number	Page	Part Number	Page	Part Number	Page
4700376255	129,143	4700381330	35,141	4700388210	125
4700376340	35	4700381347	35	4700388449	163
4700376349	35	4700381348	35	4700389577	121
4700376354	35	4700381351	125	4700389600	49
4700376366	35	4700381352	141	4700389662	115
4700376488	141	4700381353	141	4700390927	151
4700376489	141	4700381989	35	4700391219	157
4700377009	135	4700382397	143	4700391379	135
4700377010	135	4700382406	35	4700391380	135
4700377011	135	4700382411	35	4700391381	135
4700377012	135	4700382582	129,143	4700391382	135
4700377014	135	4700382751	161	4700391383	135
4700377015	135	4700383225	141	4700391386	135
4700377016	135	4700383326	125	4700391784	131
4700377018	135	4700383452	125	4700391962	53
4700377019	133	4700383705	129	4700392002	89,93
4700377020	133	4700383855	69,99,101	4700392100	93
4700377021	133	4700383973	99	4700392103	93
4700377024	133	4700384159	161	4700392105	93
4700377071	123	4700384163	119	4700392170	45
4700377518	143	4700384443	29	4700392313	45
4700377556	129,143	4700384498	19,33	4700392394	129
4700377677	141	4700384598	69,73,81	4700392771	119
4700377742	163	4700384721	43	4700392772	119
4700377743	163	4700384751	83,85	4700392786	35
4700377744	161	4700384759	143	4700392810	49
4700378335	131	4700384761	177	4700392856	119
4700378745	115	4700384762	177	4700392875	129
4700378759	135	4700384776	35	4700392937	115
4700379236	149	4700384784	73	4700392996	117
4700379394	175,177	4700384789	55,57,59	4700393085	49
4700379480	43	4700384790	71	4700393097	49
4700379482	73	4700384814	45	4700393116	43
4700379531	57	4700384821	45	4700393855	45
4700379532	57	4700384881	177	4700394061	117
4700379545	57	4700384888	133	4700394346	43
4700379546	57	4700385080	161	4700394457	35
4700379547	57	4700385134	177	4700394497	45
4700379548	57	4700385306	45	4700394500	35
4700379549	57	4700385441	31	4700394561	115
4700379550	57	4700385599	117	4700394604	29
4700379608	147	4700385720	39	4700394610	43
4700379609	175	4700385957	89,95	4700394611	43
4700379630	89	4700386272	23	4700394612	43
4700379636	129	4700386286	39	4700394614	49
4700379637	141	4700386390	173	4700394616	49
4700380012	35	4700386391	173	4700394618	53
4700380077	87	4700386392	173	4700394620	45
4700380109	35	4700386506	173	4700394621	45
4700380123	129	4700386512	173	4700394633	45
4700380144	83,87	4700386693	175	4700394680	49
4700380366	133	4700386966	49	4700394686	13,15,49
4700380577	99	4700387129	43	4700394687	15,49
4700380700	99	4700387226	131	4700394713	115
4700380727	129	4700387227	131	4700394793	53
4700380755	35	4700387427	115	4700394794	53
4700380798	123	4700387466	175	4700394863	45
4700380829	73,75,77,79,99	4700387467	175	4700394878	35
4700380963	139	4700387545	131	4700394883	53
4700380964	139	4700387683	117	4700394903	89
4700380993	19,33	4700387720	131	4700394918	49
4700381297	35	4700387797	173	4700394921	49

NUMERICAL INDEX

Part Number	Page	Part Number	Page	Part Number	Page
4700395022	49	4700500053	35,45,49,53,111	4700791110	133
4700395108	53		115,117,119,123	4700791119	91
4700395957	43		125,129,149	4700791120	91
4700396968	117	4700500056	73	4700791141	115
4700416034	133	4700500060	115	4700791161	161
4700450066	35	4700500075	115,117	4700791183	115
4700450067	35	4700500076	39,43	4700791185	117
4700482010	73	4700500077	71	4700791211	117
4700482182	73	4700500079	125	4700791212	73
4700482342	111	4700500091	83	4700791213	99
4700482391	73	4700500100	43,141	4700791218	143
4700482399	97	4700500109	73	4700791226	129
4700482516	97	4700500133	35,39	4700791231	71
4700482543	97	4700500153	139	4700791276	161
4700482727	83	4700500165	43	4700791277	161
4700482766	83	4700500192	91	4700791341	119
4700482889	89	4700500194	39,43,83,125	4700791378	157
4700482898	89	4700500195	129,143	4700791475	35
4700483131	83	4700500208	39	4700791476	131
4700483133	71	4700500209	39	4700791503	115
4700483188	111	4700500210	31,129	4700791525	115
4700483350	83	4700500226	141	4700791578	117
4700483445	111	4700500239	141	4700791582	117
4700483498	89	4700500263	99	4700791583	117
4700483505	89	4700500287	33	4700791584	117
4700483526	73	4700500295	57	4700791585	117
4700483528	89	4700500505	35,131	4700791587	117
4700483547	111	4700502019	83	4700791588	117
4700483551	99	4700502059	83	4700791642	161
4700483553	71	4700502132	73,99	4700791657	117
4700483554	71	4700508002	173	4700791723	117
4700483610	73	4700508019	39	4700791733	117
4700483673	73	4700508029	43	4700791739	117
4700484131	83	4700508068	135	4700792083	117
4700499266	49	4700508079	43	4700792261	57
4700500004	115	4700508092	133	4700792315	117
4700500006	51	4700513012	35	4700792317	117
4700500007	131	4700513017	131	4700792318	117
4700500012	45,119	4700527002	39	4700792319	117
4700500013	45,115,121,129	4700535005	153	4700792413	117
4700500018	33,45,111	4700541526	125	4700792414	117
4700500019	45,83,89,91,149	4700541702	119,121,173	4700792432	117
	157,175	4700570004	115,117,135,173	4700792435	117
4700500021	45,49,73,121,133	4700570005	115,143	4700792461	117
	139,171,175	4700570006	91	4700792462	117
4700500022	35,139,141	4700570007	39	4700792463	117
4700500023	35	4700570015	39	4700792544	45
4700500025	43,115	4700586001	35,115,133	4700792549	35
4700500027	73	4700586002	35,45,115,117,123	4700792677	115
4700500028	39,45,71,73,83		139,173	4700792682	115
4700500029	29,43,51,89,115	4700586003	49,115,121,129	4700801244	89
	129,131,143		133,139	4700801631	31
4700500030	43,71,83,115,137	4700586018	119	4700813391	29
4700500031	35,53	4700586019	43,135	4700813434	115
4700500033	71,83	4700586022	31,39	4700813444	89
4700500037	33	4700588176	161	4700813499	73
4700500040	35,45,49,119,123	4700600016	93	4700813500	71,83,89
	173	4700624005	161	4700813791	49
4700500043	29	4700624016	141	4700813822	75,81
4700500046	39,73,89	4700624017	161	4700813828	77
4700500047	35	4700635061	29,93	4700815056	39
4700500048	49,137	4700747282	51	4700815680	31

NUMERICAL INDEX

Part Number	Page	Part Number	Page	Part Number	Page
4700815681	31	4700903423	161	4700904433	129,143
4700900229	73	4700903424	161	4700904486	45
4700900430	83	4700903425	161	4700904504	35
4700900552	97	4700903436	119	4700904543	119
4700900775	39	4700903459	161	4700904551	45
4700900806	73	4700903570	81	4700904556	45,49,53,115,133
4700900957	65,107	4700903571	81		175
4700901145	57,129,143	4700903575	81	4700904557	29,115
4700901157	83	4700903631	115	4700904563	135
4700901190	125	4700903632	115	4700904567	35,91
4700901220	171	4700903640	115	4700904619	141
4700901224	123,173	4700903641	115	4700904637	43,51,71,83,89
4700901225	117	4700903714	45		115
4700901227	117	4700903727	129	4700904638	43,73,99
4700901228	117	4700903768	115	4700904639	45
4700901369	119	4700903782	117,149	4700904640	35,43,53,119,141
4700901385	87	4700903925	83		171
4700901386	87	4700903945	135	4700904653	131
4700901387	87	4700903946	135	4700904663	19
4700901389	87	4700903947	135	4700904695	51
4700901390	87	4700903956	117	4700904703	43,83
4700901453	75,81	4700903985	57	4700904734	141
4700901454	75	4700904004	71	4700904767	83
4700901455	81	4700904005	73,89,99	4700904773	83
4700901465	81	4700904015	173	4700904774	83
4700901467	81	4700904032	115	4700904781	83
4700901475	77	4700904036	115	4700904793	99
4700901482	77	4700904037	115	4700904835	163
4700901718	75	4700904038	115,119	4700904870	161
4700901721	75	4700904039	175	4700904910	123
4700901722	75	4700904060	49	4700904985	51
4700901725	77	4700904076	45,47	4700905304	155
4700901727	77	4700904093	163	4700905305	155
4700901728	77	4700904098	161,163	4700905306	155
4700901767	117	4700904180	141	4700907163	77
4700901833	59	4700904206	125	4700908136	45,111
4700901834	101	4700904213	73	4700908217	77
4700901987	67,109	4700904228	35,45,49,115,119	4700908229	161
4700902123	137		121,123,129,133	4700908378	75
4700902125	111		139,173	4700908383	85
4700902166	35,45,53,129,131	4700904229	33,43,45,73,83	4700908399	49
4700902203	129		89,91,111,115,117	4700908432	75,77,81
4700902227	119		121,123,125,129	4700908439	77
4700902284	115		133,139,143,149	4700908448	77
4700902285	35,45,125		157,175	4700908499	147,149,151
4700902287	53	4700904230	29,39,45,49,51	4700908506	149
4700902288	125		53,73,83,115,119	4700908507	149
4700902379	35		129,131,137,143	4700908545	147,151
4700902496	125	4700904231	33,35,39,83,89	4700908580	151
4700902610	171		125,129,143	4700908581	151
4700902624	85	4700904232	39,43	4700908582	151
4700902642	85	4700904233	31,39,57,129,141	4700908583	151
4700902655	87		143	4700908605	155
4700902688	85	4700904241	89	4700908617	155
4700902724	85	4700904281	35,51,115,131	4700908623	153
4700902792	85	4700904282	73	4700908624	153
4700902928	75,81	4700904292	43	4700908773	77,81
4700903052	77	4700904314	119	4700909122	173
4700903190	51	4700904340	139	4700909239	75
4700903192	125,129	4700904346	45	4700909252	81
4700903290	31,129,143	4700904352	45,73	4700909253	81
4700903422	161	4700904415	173	4700909257	77

NUMERICAL INDEX

Part Number	Page	Part Number	Page	Part Number	Page
4700909349	75,77	4700926736	39	4700935299	147
4700909373	75	4700926781	67,109	4700935300	147
4700909375	75,77	4700926985	45	4700935301	147
4700909376	75	4700927233	135	4700935302	147
4700909377	75	4700927350	87	4700935303	149
4700909378	75	4700927358	85	4700935429	95
4700909379	75	4700927974	129,143	4700935533	81
4700909384	75	4700928830	137	4700935580	157
4700909385	75	4700929023	115	4700935613	137
4700909386	75	4700929123	89	4700935614	137
4700909387	75	4700929226	71,83	4700935617	81
4700909388	75	4700929447	21,23,39	4700935618	81
4700909389	75	4700929648	59,101	4700935623	81
4700909390	75	4700929712	59	4700935624	81
4700909395	75	4700929863	19	4700935625	81
4700909396	75	4700930151	125	4700935626	81
4700909398	75	4700935158	85	4700935627	81
4700909399	75,77	4700935159	85	4700935629	81
4700909402	75	4700935187	85	4700935630	81
4700909403	75	4700935190	85	4700935632	81
4700909405	75	4700935192	85	4700935633	81
4700909406	75	4700935219	85	4700935634	81
4700909409	75	4700935244	151	4700935741	81
4700909410	77	4700935245	151	4700935857	77
4700909411	77	4700935246	151	4700936020	67,109
4700909428	77	4700935247	151	4700936023	63,105
4700909429	77	4700935248	151	4700936052	105
4700909432	77	4700935249	151	4700936053	63,105
4700909436	77	4700935250	151	4700936054	63,105
4700909514	85	4700935253	151	4700936055	63,105
4700909544	61,103	4700935265	151	4700936056	63,105
4700909547	65,107	4700935266	151	4700936097	65,107
4700909582	101	4700935267	151	4700936307	85
4700909583	101	4700935268	151	4700936308	85
4700909584	101	4700935269	151	4700936393	85
4700909596	61,67,103,109	4700935270	151	4700936394	85
4700909607	61,67,103	4700935271	147,151	4700936421	85
4700909616	65,107	4700935272	147,151	4700936552	75
4700909630	59	4700935273	147,151	4700936553	75
4700909631	59	4700935274	147,151	4700936567	77
4700909632	59	4700935275	147,151	4700936568	77
4700910161	89	4700935276	147,151	4700936579	77
4700910995	33	4700935277	147,151	4700936686	85
4700921031	45	4700935278	147	4700936727	71
4700921039	119,121,173	4700935279	147	4700936728	71
4700921050	45	4700935280	147	4700936803	85
4700921080	115	4700935281	147	4700937136	75
4700921084	45	4700935282	147	4700937138	75
4700921104	115	4700935283	147	4700937139	75
4700921132	175	4700935284	147	4700937140	75
4700922552	39	4700935285	147	4700937141	77
4700923008	51	4700935286	147	4700937142	77
4700923087	75,77	4700935287	147	4700937143	77
4700923371	73	4700935288	147	4700937145	77
4700923384	73,99	4700935289	147	4700937149	77
4700924791	139	4700935290	147	4700937153	77
4700924875	35	4700935291	147	4700937159	77
4700925802	119	4700935293	147	4700937211	85
4700926116	63,105	4700935295	147	4700937215	85
4700926214	19,33	4700935296	147	4700937218	85
4700926537	133	4700935297	147	4700937219	85
4700926658	77	4700935298	147	4700937232	85

NUMERICAL INDEX

Part Number	Page	Part Number	Page	Part Number	Page
4700937233	85	4700938986	61,103	4700939270	109
4700937236	85	4700938987	61,103	4700939384	109
4700937237	85	4700938988	63,105	4700939385	109
4700937256	87	4700938989	63,105	4700939386	109
4700937257	87	4700938990	63,105	4700939387	109
4700937258	87	4700938991	63,105	4700939693	177
4700937259	87	4700938992	63,105	4700940374	135
4700937260	87	4700938994	63,105	4700940451	117
4700937261	87	4700938995	63,105	4700940505	85
4700937264	87	4700938996	63,105	4700940506	85
4700937265	87	4700938997	63,105	4700940674	85
4700937280	81	4700938998	63,105	4700940678	151
4700937380	147	4700938999	63,105	4700945407	135
4700937381	147	4700939002	67,109	4700945729	135
4700937382	147	4700939003	67,109	4700945776	85
4700937383	147	4700939004	67,109	4700945777	51
4700937384	147	4700939005	67	4700945906	79
4700937385	147	4700939006	67,109	4700945951	77
4700937389	147	4700939007	67,109	4700950301	9,13,15,51
4700937390	151	4700939008	67,109	4700950302	9,13,15,43
4700937391	151	4700939009	67,109	4700950303	43
4700937392	151	4700939010	67,109	4700950304	43
4700937393	151	4700939011	67,109	4700950315	43
4700937673	87	4700939012	67,109	4700950334	45
4700937737	175	4700939013	67,109	4700950335	45
4700937830	75	4700939014	67,109	4700950336	45
4700937857	77	4700939015	67,109	4700950337	45
4700937870	157	4700939016	67,109	4700950400	5,7,9
4700937871	155	4700939017	67,109	4700950401	5,7,13
4700937993	87	4700939018	67,109	4700950403	5,7,15
4700937995	87	4700939019	67,109	4700950565	77
4700938017	151	4700939020	67,109	4700960067	173
4700938018	151	4700939021	65,107	4700960727	115
4700938040	87	4700939022	65,107	4700989151	91
4700938041	87	4700939023	65,107	4700991658	163
4700938042	87	4700939024	65,107	4700999011	121
4700938101	151	4700939025	65,107	4700999027	117
4700938251	77	4700939026	65,107	47386084BR	161
4700938252	77	4700939027	65,107	47386084CN	161
4700938253	77	4700939028	65,107	47386084DE	161
4700938290	147	4700939029	65,107	47386084DK	161
4700938291	147	4700939030	65,107	47386084EN	161
4700938292	147	4700939031	65,107	47386084ES	161
4700938558	17,19	4700939032	65,107	47386084FI	161
4700938621	177	4700939033	65,107	47386084FR	161
4700938622	177	4700939034	65,107	47386084GR	161
4700938638	177	4700939035	65,107	47386084IS	161
4700938639	177	4700939036	65,107	47386084IT	161
4700938645	177	4700939037	65,107	47386084NL	161
4700938659	147	4700939038	65,107	47386084NO	161
4700938678	157	4700939039	65,107	47386084PT	161
4700938679	157	4700939068	9,11,13,15,43	47386084SE	161
4700938755	77	4700939070	15	4812110216	119
4700938876	17,25	4700939076	5,7,11	4812110517	49
4700938891	17,23	4700939168	85	4812155075	129
4700938898	17,21	4700939236	81		
4700938980	61,103	4700939237	81		
4700938981	61,103	4700939238	81		
4700938982	61,103	4700939239	81		
4700938983	61,103	4700939240	81		
4700938984	61,103	4700939241	81		
4700938985	61,103,109	4700939242	81		