DYNAPAC
CC222CHF

SPARE PARTS CATALOGUE

SCC222CHF-2EN2

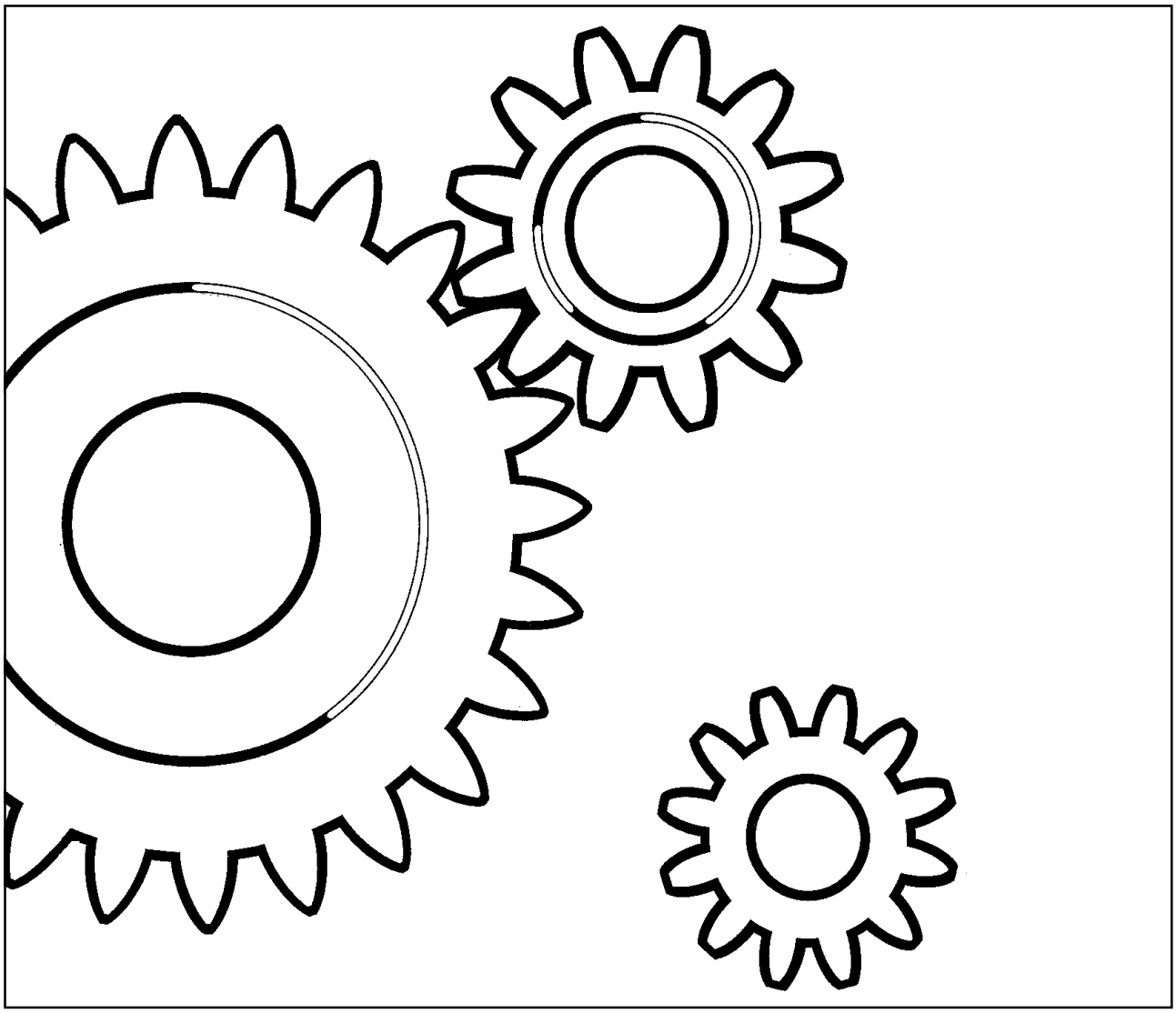

DYNAPAC
Part of the Atlas Copco Group

Box 504, SE-371 23 Karlskrona, Sweden
Phone: +46 455 30 60 00, Fax: +46 455 30 60 10
www.dynapac.com

DYNAPAC
Part of the Atlas Copco Group

Vibratory Roller
CC222CHF

Spare Parts Catalogue
SCC222CHF-2EN2

Valid from roller serial number:

61812100

Diesel engines:

Deutz BF04L 2011 / TD2011 L04 I

Published catalogue issues valid for these rollers:

Catalogue	*Issue date*	*Valid for serial numbers*
SCC222CHF-2EN1	*2007 - 04*	*Replaced by SCC222CHF-2EN2*
SCC222CHF-2EN2	*2008 - 04*	**61812100 -*

We reserve the right to change specifications without notice.
Printed in Sweden.

DYNAPAC
Part of the Atlas Copco Group

RESERVDELSBESTÄLLNING

Följande uppgifter ska lämnas vid beställning av reservdelar för att undvika leveransfel:

1. Maskintyp.
2. Vältens serienummer.
3. Antal av önskad reservdel.
4. Reserdelens artikelnummer.
5. Reservdelens benämning.
6. Måttuppgifter vid beställning av metervara.

ORDERING SPARE PARTS

To avoid errors in delivery, please give the following information when ordering spare parts:

1. Type of machine.
2. Roller serial number.
3. Quantity required.
4. Part number.
5. Parts denomination.
6. Dimensions when ordering per length.

ERSATZTEILBESTELLUNG

Zur Vermeidung von Fehllieferungen sind bei der Bestellung von Ersatzteilen folgende Angaben zu machen:

1. Maschinentyp.
2. Herstellungsnummer.
3. Bestellmenge. (Quantity)
4. Ersatzteilnummer. (Part Nº)
5. Ersatzteilbenennung. (Denomination)
6. Massangaben bei Bestellung von Meterware.

ORDINI DI RICAMBI

Per evitare errori nelle consegne di ricambi, Vi preghiamo di comunicarci le seguenti informazioni al momento dell 'ordinazione:

1. Tipo di macchina.
2. Numero di serie della macchina.
3. Quantità dei pezzi desiderati. (Quantity)
4. Numero di codice del pezzo. (Part Nº)
5. Descrizione del pezzo di ricambio. (Denomination)
6. Misura, in caso di ordine per metro.

PEDIDO DE RECAMBIOS

Para evitar errores en las entregas, deberán indicarse los siguientes datos al hacer un pedido de recambios:

1. Tipo de máquina.
2. Número de serie.
3. Cantidad de piezas deseadas. (Quantity)
4. Número de artículo de la pieza de recambio. (Part Nº)
5. Denominación de la pieza. (Denomination)
6. Indíquese la medida al solicitar un artículo que se expide por metros.

COMMANDE DE PIECES DE RECHANGE

Les indications suivantes doivent être fournies lors de la commande de piéces de rechange, afin d'éviter toute erreur de livraison:

1. Type de machine.
2. Numéro de série.
3. Quantité désirée de pièce de rechange. (Quantity)
4. Numéro de la piéce de rechange. (Part Nº)
5. Dénomination de la piéce de rechange. (Denomination)
6. Longueur en cas de commande au mètre.

YOUR AGENT/DEALER:

Text pages

The text pages is structured as the picture on the right.

1. This is the remarks for specific items and the descriptions of the remarks is at the bottom of the parts list.

2. Parts indicated by a dot and moved to the right are included when buying the assembled unit above.

3. Spare parts and service code for a specific part, mainly for internal use at Dynapac. "A" = Service part, "B" = Fast moving part, "C" = Suggested exchanged part and "D" = Regular spare part.

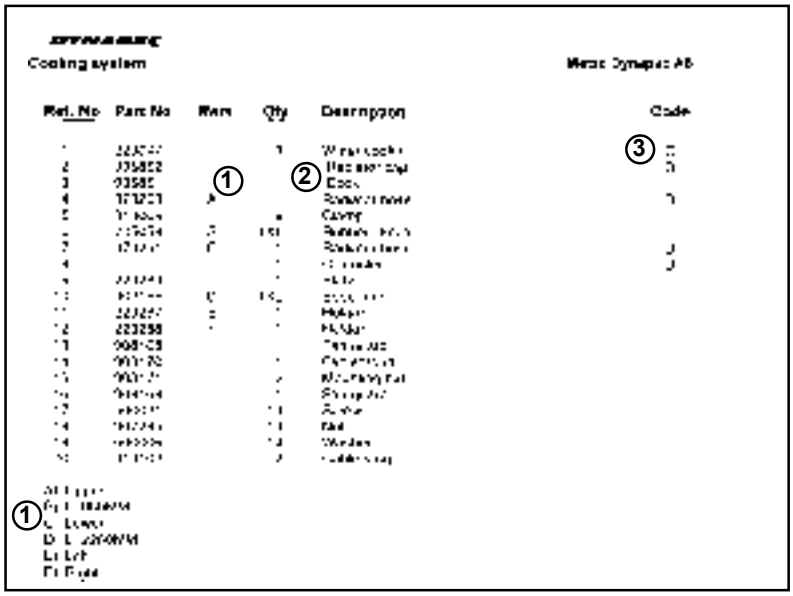

Changes

PARTS INFO	SERVICE INFO	GROUP	PAGE	NOTES

Notes

Notes

PÄRMETIKETT

För att undvika fel vid reservdelsbeställning finns här nedan två etiketter som passar i fickorna på pärmarnas ryggar. På dessa kan man se från vilket vältnummer av aktuell maskin reservdelskatalogen gäller. Gör så här:

1. Tag denna sida ur pärmen.
2. Klipp ut etiketten till **VÄNSTER** (1) och sätt in den i fickan på **DENNA** pärmens rygg.
3. Finns det en etikett till **HÖGER** (2), kan denna användas på pärmen för **FÖREGÅENDE** utgåva av denna katalog.
4. Kasta detta papper.

BINDER LABEL

To avoid errors when ordering spare parts use the labels below to identify the catalogues on the back of the binder. The label contain the serial number range for which the catalogue is valid. Do like this:

1. Remove this page from the binder.
2. Cut out the **LEFT** label (1) and put it on **THIS** binders back.
3. If there is a label to the **RIGHT** (2), it can be used on the binder for **PRECEDING** issue of this catalogue.
4. Throw away this paper.

KATALOG-BESCHRIFTUNG

Zur Vermeidung von Fehlen bei der Ersatzteilbestellung benutzen Sie bitte die unteren Beschriftungen, um die Kataloge auf der Rückseite zu kennzeichen. Auf der Beschriftung ist angegaben, für welche Maschinennummern der jeweilige Katalog gültig ist. Ablauf:

1. Nehmen Sie dieses Blatt aus dem Katalog.
2. Schneiden Sie die **LINKE** Beschriftung (1) aus. Schieben Sie die Beschriftung in die tasche auf **DEM** Katalogrücke.
3. Sollte die Beschriftung unten **RECHTS** (2) mitgeliefert werden, kennzeichen Sie damit bitte die **ÄLTERE** Ausführung dieses Kataloges.
4. Den Rest dieses Blattes bitte vernichten.

ETICHETTA POSTA SUL RACCOGLITORE

Per evitare errori quando ordinate pezzi di ricambio, usate le etichette in calce che servono ad identificare i cataloghi sul retro del raccoglitore. L'etichetta indica il numero di matricola delle maccine prese in considerazione nel catalogo.

1. Rimuovete questa pagina dal raccoglitore.
2. Ritagliate l'etichetta posta a **SINISTRA** (1) e ponetela sul retro **DEL** raccoglitore.
3. Se trovate anche un'etichetta sulla **DESTRA** (2), ritagliatela e ponetela sul raccoglitore relativo alla **PRECEDENTE** edizione del catalogo.
4. Distruggete questo foglio.

ETIQUETA PARA LA CARPETA

Para evitar errores al pedir repuestos utilicen las etiquetas abajo descritas para identificar los catálogos en la parte trasera de la carpeta. En la etiqueta se ven los números de referencia de la serie para la cual es válido el catálogo. Instrucciones:

1. Quitar esta página de la carpeta.
2. Corta la etiqueta **IZQUIERDA** (1) y ponerla est **ESTA** carpeta en la parte trasera.
3. Si hay una etiqueta en la parte **DERECHA** (2) se puede utilizar en la carpeta para el catálogo que **PRECEDE** a esta.
4. Tirar esta hoja.

ETIQUETAGE DU CATALOGUE

Afin d'éviter des erreurs lors de commandes de pièces de rechange, nous vous conseillons d'apposer les marquages ci-dessous à l'arrière du classeur, pour identifier les catalogues. Ce marquage indique les numéros de série pour lesquels le catalogue est adapté. Il convient de procéder de la façon suivante:

1. Retirez cette page du classeur.
2. Découpez l'étiquette de **GAUCHE** (1), et apposez-la à l'arrière de **CE** catalogue.
3. Si il y a une étiquette à **DROITE** (2), vous pourrez l'apposer sur le classeur de l'edition **PRECEDENTE** du catalogue.
4. Détruire cetta feuille.

1.

CC222CHF

Catalogue **SCC222CHF-2EN2**
Valid **from** serial number:
***61812100* -**

TABLE OF CONTENTS

Page

CC222CHF SN 61812100 - 2

Service kits 4

Service kits 6
940237 Service kit 50h, Deutz 4cyl 2011 8
940238 Service kit 500h, Deutz 4cyl 2011 10
940239 Service kit 1000h, Deutz 4cyl 2011 12

Repair kits 14

Repair kits 16
945721 Eccentric shaft kit 18
938891 Drum rotation kit 20
945717 Shock absorber kit, drum CC222/322,CG223 22
938558 Steering hitch kit 24

Frame 26

Frames 28
Covers, ladders 30
Scrapers, standard, front drum 32
Scrapers, spring loaded, front drum 34
Scrapers, wheels 38
Sprinkler mat Option 40
Articulated link 42
Structure 44
Noise suppression Left hood 48
Sprinkler system Tanks 50
Sprinkler system, front 54
Sprinkler system, rear Up to 61812162 58
Sprinkler system, rear From 61812163 62
Protective cover Combi wheels 66

Drum 68

Drum 70
Wheels, rear 72

Engine 74

Diesel engine Deutz BF04L 2011 Up to 61812399 76
Diesel engine Deutz TD2011 L04 I From 61812400 78
Intake system 80
Fuel system 82
Exhaust system 84

Hydraulic system 86

Propulsion system Pump 88
Propulsion system Motors 90
Vibration system Pump 92
Vibration system Motor 94
374494 Oil cooler cpl 96
Steering system Up to 61812399 98
Steering system From 61812400 102
359139 Pilot valve 106
Offset drum Option 108
380780 Direction control valve 110
373403 Cylinder Offset drum 112
Brake system 114

Electrical equipment 116

TABLE OF CONTENTS

Page

Electrical equipment 118
Electrical equipment Additional for cab 122
Electric battery switch 124
Instrument box 126
Instrument panel, main 128
Speed and frequency Sensors 130
Instrument panel Upper left 132
Instrument panel Upper right 134
Instrument panel Lower left 136
Instrument panel Lower right 138
Instrument panel Relay, fuses 140
Emergency stop panel 142
Driving lights Direction & licenseplate light 144
Working lights with/without Rops 146
Protecting cover, Headlight 148
Working lights, cab 150
Rotating beacon 152
Tachograph 154
Offset drum Electrical equipment 156

Drivers platform 158

Drivers platform 160
Drivers platform For cab 162
Drivers seat, turn-over 164
Drivers seat, turn-over in cab 166
391163 Steering column 168
Cross sliding Controls 170
Cross sliding Carrier 172
Forward and reverse control 174
Speed limiter Option 176
Engine controls Up to 61812399 178
Engine controls From 61812400 180
Rear mirror 182
Rops and fops With seat belt 184
Canopy 186
Cab, asymmetric 188
Cab, interior 190
Cab, screens 192
Cab, inside panels 194
Cab, wipers, right side 196
Cab, wipers, front and rear 198
Cab, door, left side 200
Cab, door, left side (3-split) 202
Cab, heater and, fan system 204
385769 Heater unit 206
Cab, roof mounted, electrical switches 208
Cab, symmetric 210
Cab Interior 212
Cab Screens 214
Cab Inside panels 216
Cab, wipers, front and rear 198
Cab, door, left side 200
Cab, door, left side (3-split) 202
Cab, heater and, fan system 204
385769 Heater unit 206
Cab, roof mounted, electrical switches 208
Cab, equipment 218
Cab, water tank wipers 220
Exterior rear mirrors 222
Radio and cassette/cd player 224

TABLE OF CONTENTS

Page

Decals 226

Plates and decals 228

Standard equipment 232

Standard equipment 234

Optional equipment 236

Eyelet 238
SMV-sign, Plate holder 240
Air conditioner assembly 242
Condensor assembly 246
385766 Heater/AC unit 248
Roof hatch 250
Tool equipment 252
Edge cutter, cpl 254
Edge cutter 256
Edge cutter Hydraulics without offset 258
Edge cutter Hydraulics with offset 260
Edge cutter Sprinkler system 262
Asphalt temperature meter 264

50
60
90
91
70
30
80
DYNAPAC
CC 222
DYNAPAC
20
10

Ref. No.	Part No.	Rem.	Qty	Description	Code
				Service kits (Page 4)	
				Repair kits (Page 14)	
10				Frame (Page 26)	
20				Drum (Page 68)	
30				Engine (Page 74)	
50				Hydraulic system (Page 86)	
60				Electrical equipment (Page 116)	
70				Drivers platform (Page 158)	
80				Decals (Page 226)	
90				Standard equipment (Page 232)	
91				Optional equipment (Page 236)	

Service kits

Ref. No.	Part No.	Rem.	Qty	Description	Code
-1				Service kits (Page 6)	

Service kits

Ref. No.	Part No.	Rem.	Qty	Description	Code
1	940237			Service kit (Page 8)	50h, Deutz 4cyl 2011
2	940238			Service kit (Page 10)	500h, Deutz 4cyl 2011
3	940239			Service kit (Page 12)	1000h, Deutz 4cyl 2011

940237 Service kit 50h, Deutz 4cyl 2011

17423

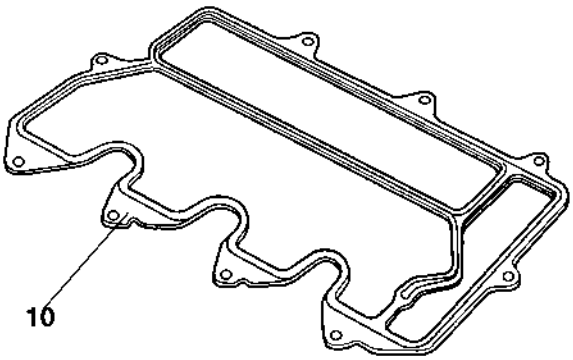

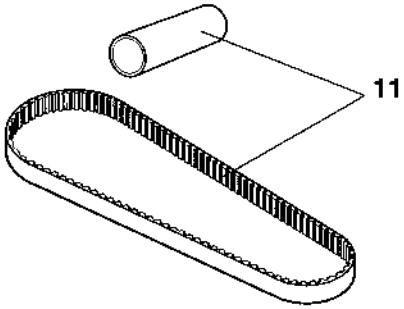

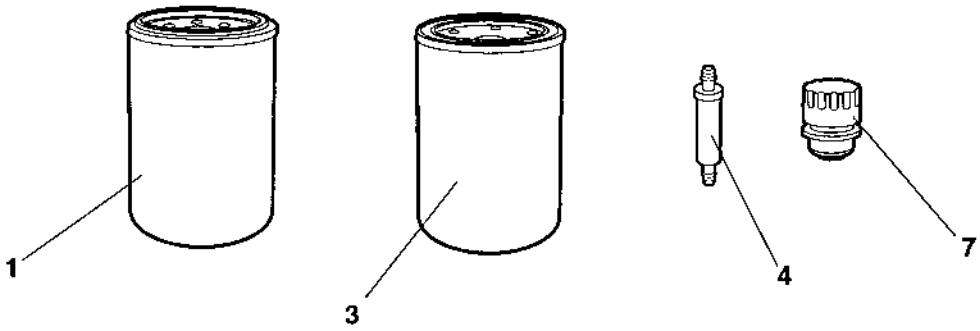

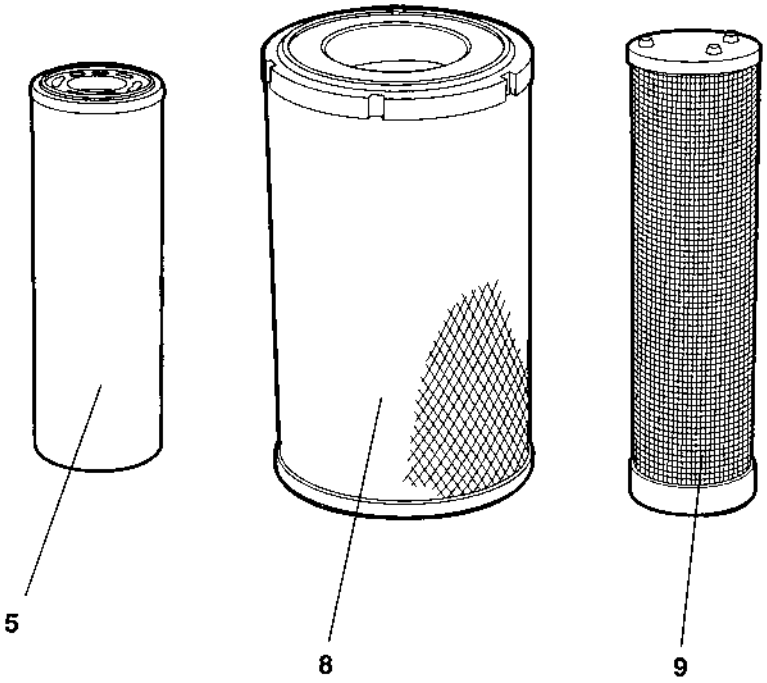

940237 Service kit 50h, Deutz 4cyl 2011

Ref. No.	Part No.	Rem.	Qty	Description	Code
1	939515		1	Oil filter	A
3	903938		1	Fuel filter	A
4	929322		1	Fuel strainer	A
5	372229		1	Hydraulic oil filter element	A

940238 Service kit 500h, Deutz 4cyl 2011

17423

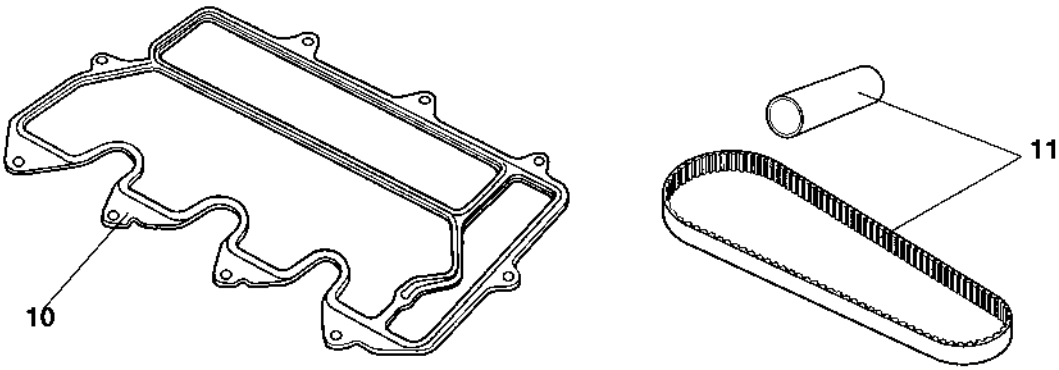

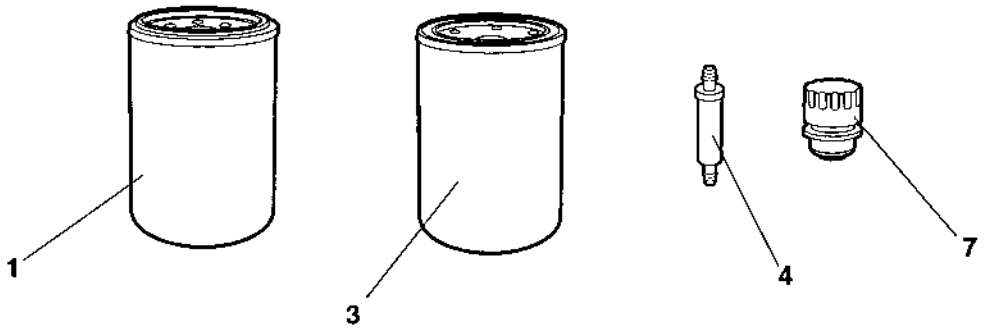

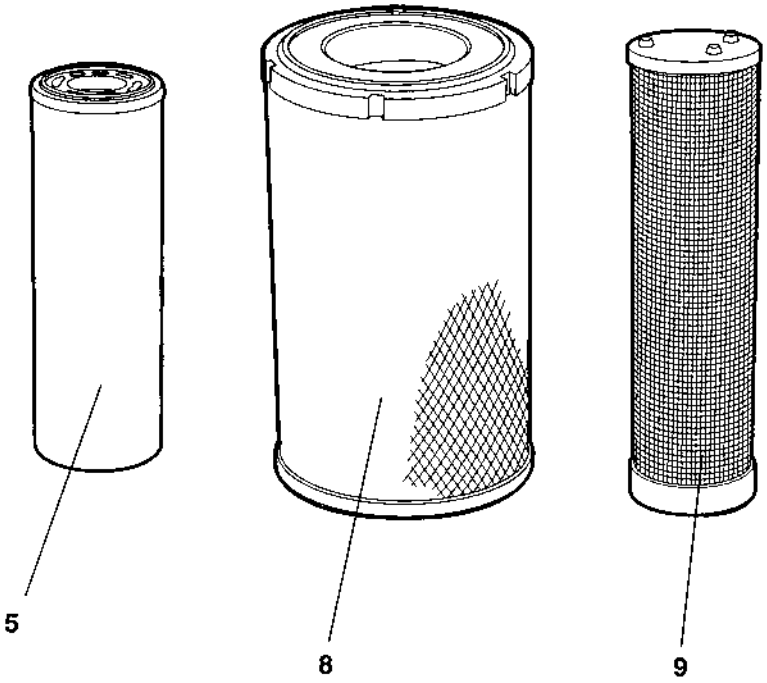

940238 Service kit 500h, Deutz 4cyl 2011

Ref. No.	Part No.	Rem.	Qty	Description	Code
1	939515		1	Oil filter	A

940239 Service kit 1000h, Deutz 4cyl 2011

17423

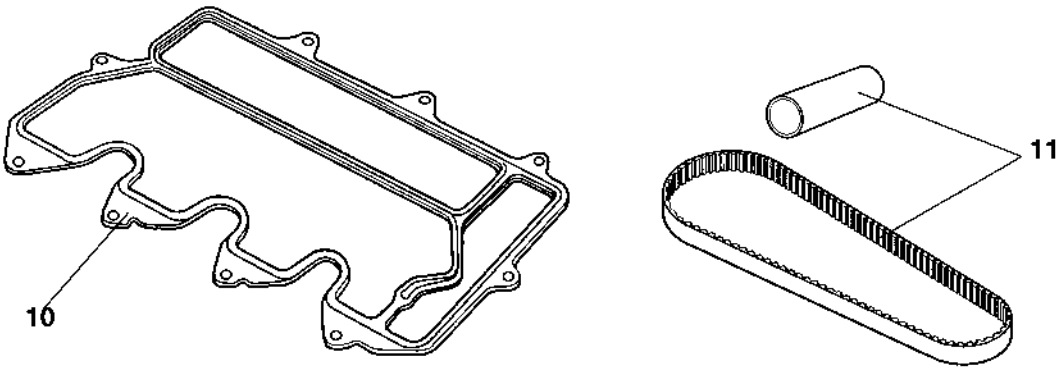

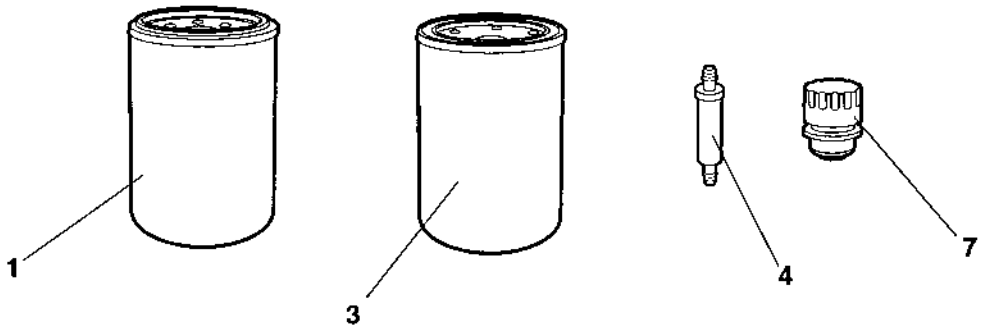

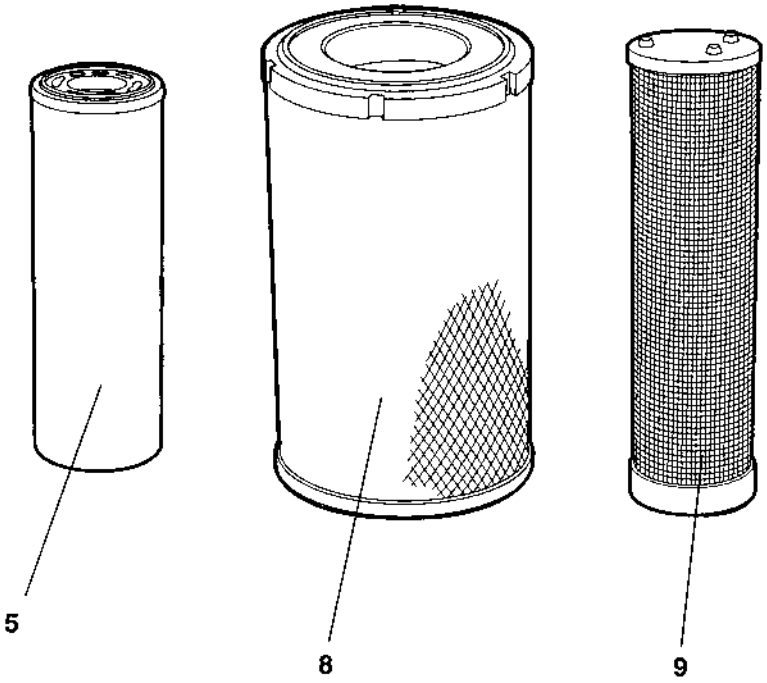

940239 Service kit 1000h, Deutz 4cyl 2011

Ref. No.	Part No.	Rem.	Qty	Description	Code
1	939515		1	Oil filter	A
3	903938		1	Fuel filter	A
4	929322		1	Fuel strainer	A
5	372229		1	Hydraulic oil filter element	A
7	357138		1	Ventilating filter	A
8	908400		1	Main filter	A
9	908401		1	Safety filter	A
10	940235		1	Valve cover gasket	

Repair kits

Ref. No.	Part No.	Rem.	Qty	Description	Code
-1				Repair kits (Page 16)	

Repair kits

Ref. No.	Part No.	Rem.	Qty	Description	Code
1	945721		1	Eccentric shaft kit (Page 18)	
2	938891		1	Drum rotation kit (Page 20)	
4	945717		1	Shock absorber kit, drum (Page 22)	CC222/322,CG223
5	938558			Steering hitch kit (Page 24)	

945721 Eccentric shaft kit

945721

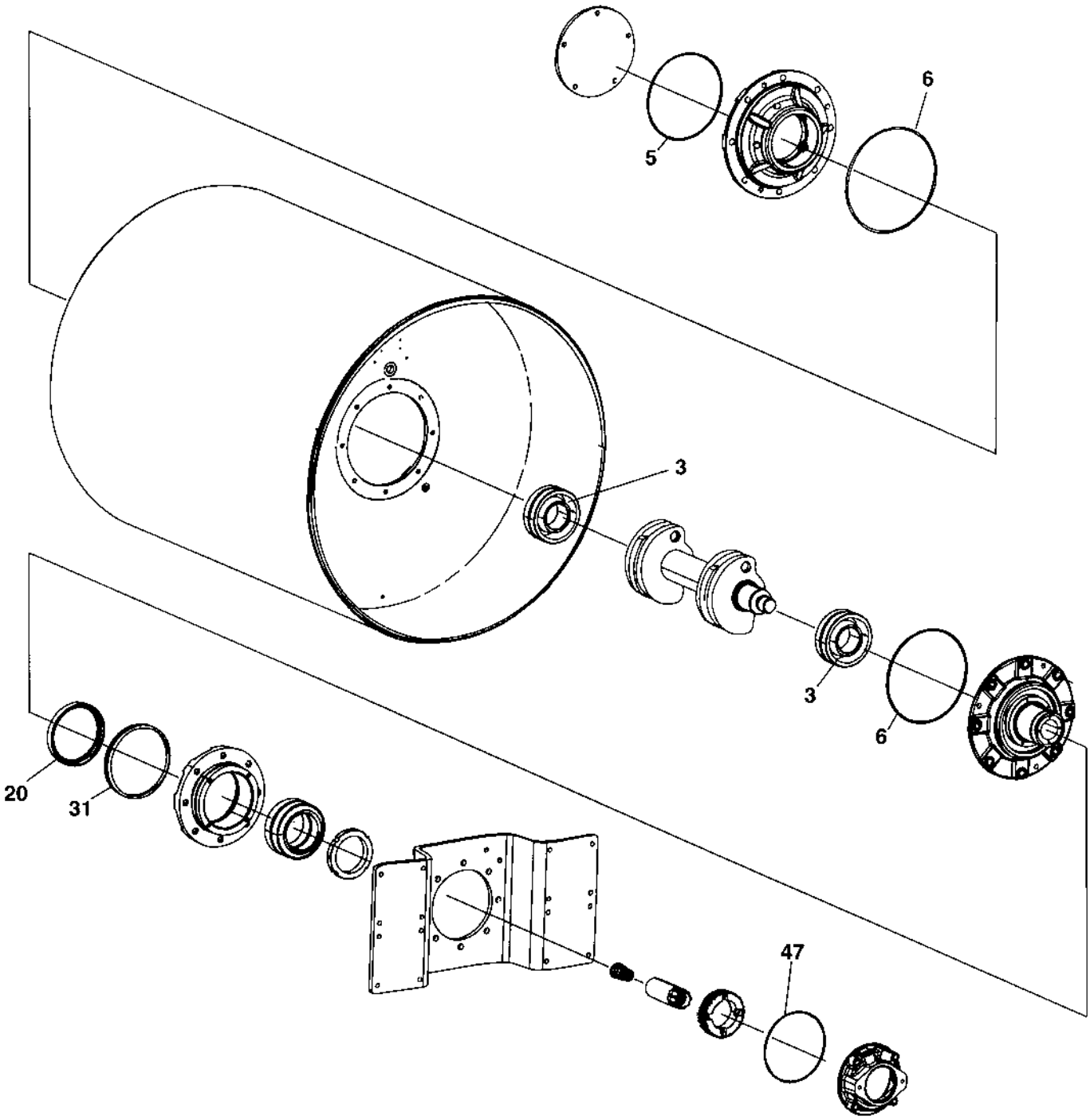

945721 Eccentric shaft kit

Ref. No.	Part No.	Rem.	Qty	Description	Code
3	114060		2	Spherical roller bearing	D
5	160045		1	O-ring 70	
6	160344		2	O-ring 70	D
20	386272		1	Sealing	D
31	929447		1	V-ring	D
47	160105		1	O-ring 70	D

938891 Drum rotation kit

RAMLAGER

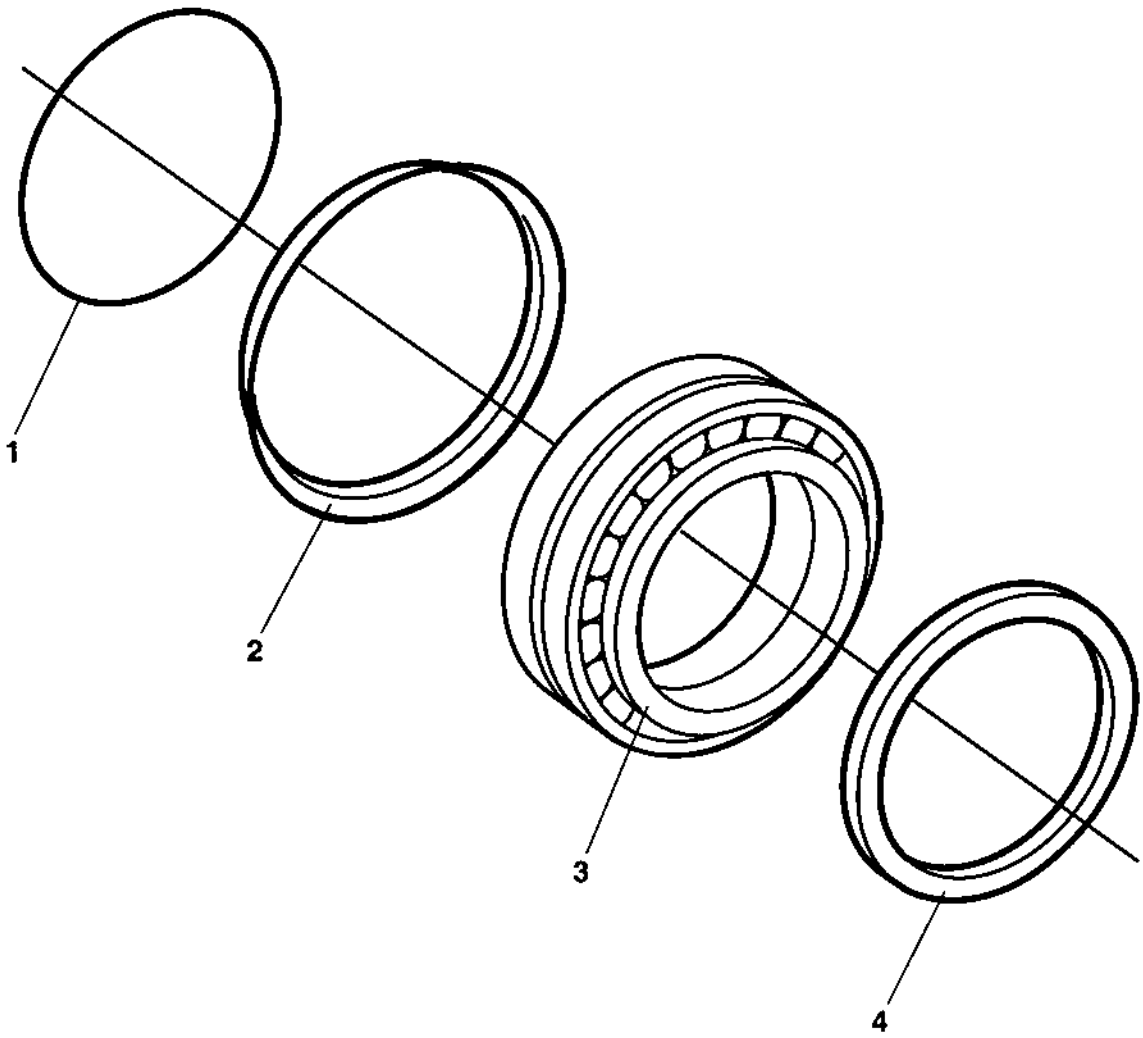

938891 Drum rotation kit

Ref. No.	Part No.	Rem.	Qty	Description	Code
1	160105		1	O-ring 70	D
2	929447		1	V-ring	D
3	116041		1	Taper roller bearing	D
4	386272		1	Sealing	D

945717 Shock absorber kit, drum CC222/322,CG223

945717

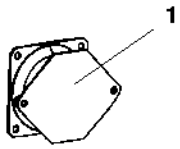

945717 Shock absorber kit, drum CC222/322,CG223

Ref. No.	Part No.	Rem.	Qty	Description	Code
1	394250		6	Shock absorber	B
2	394251		4	Shock absorber	

938558 Steering hitch kit

938558

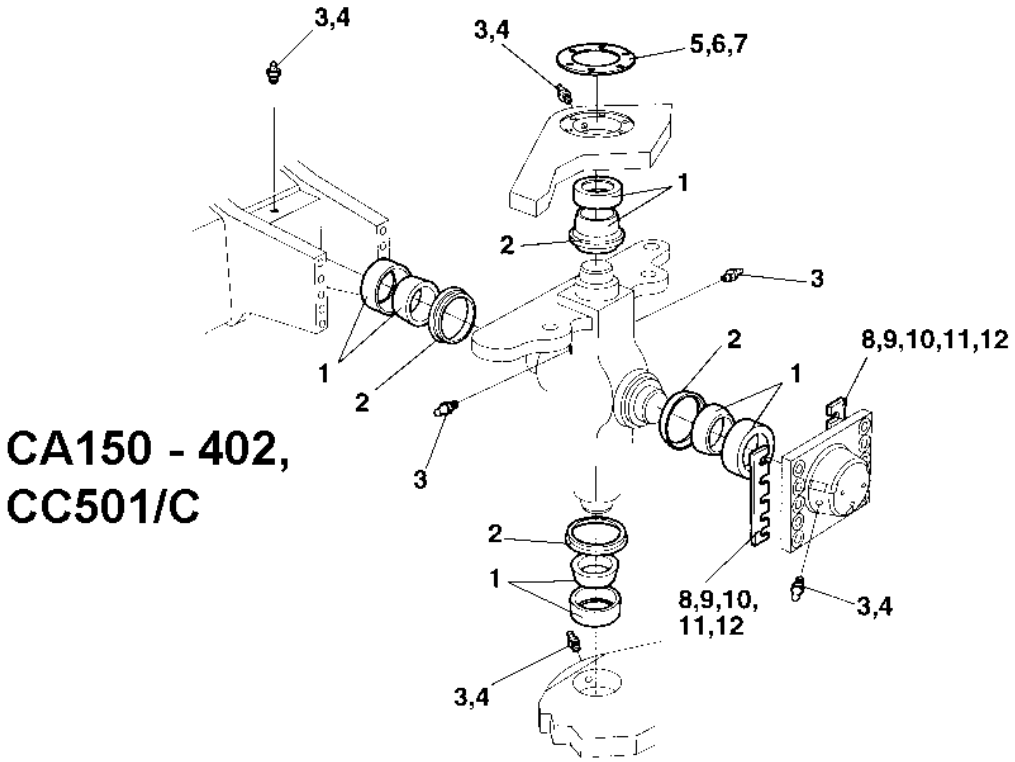

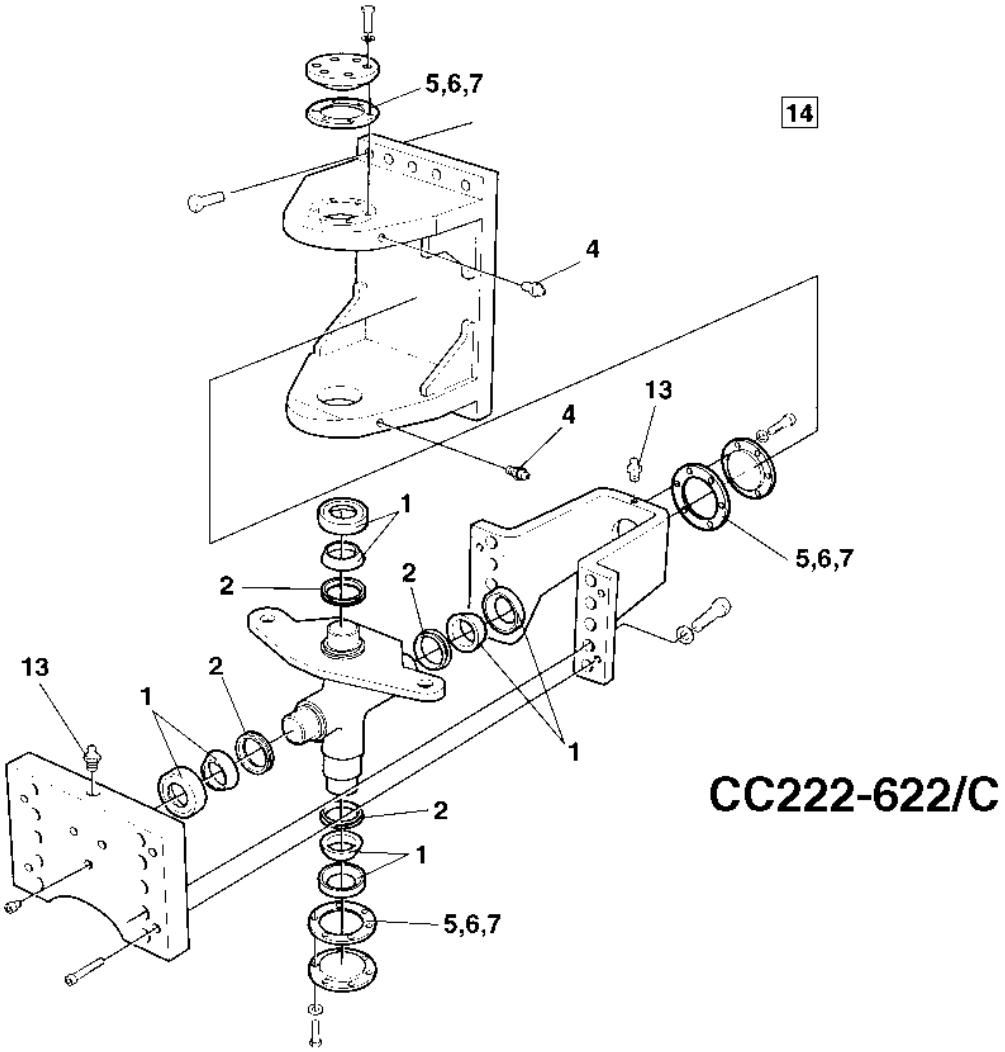

938558 Steering hitch kit

Ref. No.	Part No.	Rem.	Qty	Description		Code
1	100040		4	Axial ball bearing		D
2	167032		4	Lip-type oil seal		D
3	310008	2	3	Grease nipple		D
4	926214		2	Grease fitting		D
5	337045		3	Shim	T=1,0 mm	D
6	345874		3	Shim	T=0,35 mm	D
7	345875		3	Shim	T=0,10 mm	D
8	345871	1	2	Shim	T=1,0 mm	D
9	345872	1	2	Shim	T=0,35 mm	D
10	345873	1	2	Shim	T=0,10 mm	D
11	380993	1	2	Shim	T = 2,0 mm	D
12	384498	1	2	Shim	T = 0,15 mm	D
13	929863	3	1	Grease nipple		D
14	904663		1	Lube grease	" DYNAPAC special approved "	
15			1	Instructions		

1) Valid for CA150-402 and CC501/C
2) Valid for CC501/C
3) Valid for CC222/232/322/422/432/522/622/C

Frame

Ref. No.	Part No.	Rem.	Qty	Description	Code
10				Frames (Page 28)	
15				Covers, ladders (Page 30)	
20				Scrapers, standard, front drum (Page 32)	
25				Scrapers, spring loaded, front drum (Page 34)	
26				Scrapers, wheels (Page 38)	
35			1	Sprinkler mat (Page 40)	Option
40				Articulated link (Page 42)	
50				Structure (Page 44)	
58				Noise suppression (Page 48)	Left hood
60				Sprinkler system (Page 50)	Tanks
70				Sprinkler system, front (Page 54)	
72				Sprinkler system, rear Up to 61812162 (Page 58)	
				Sprinkler system, rear From 61812163 (Page 62)	
75				Protective cover (Page 66)	Combi wheels

Frames

18471

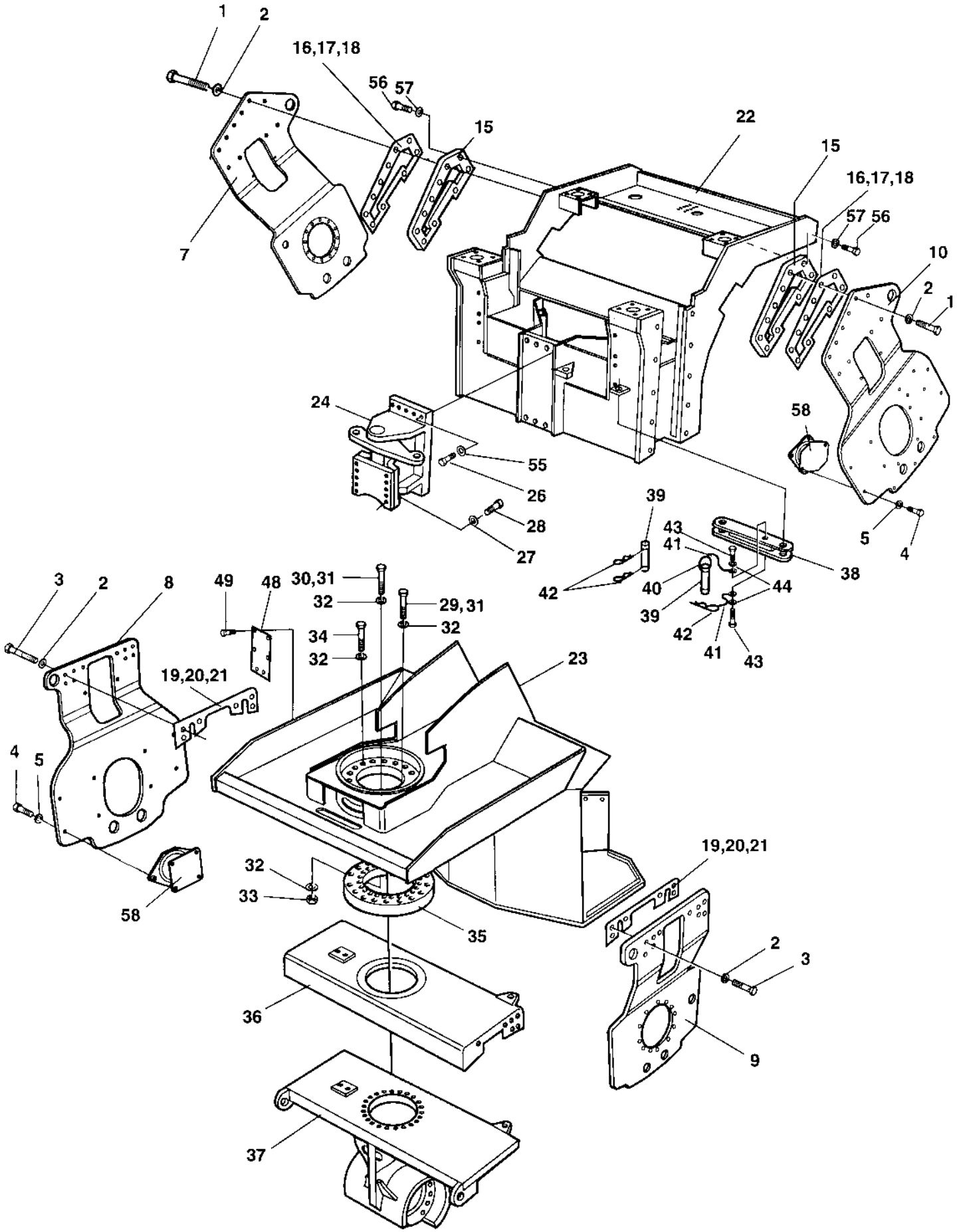

Frames

Ref. No.	Part No.	Rem.	Qty	Description		Code
1	500199		20	Screw	M16-2x110 8,8	
2	904232		20	Washer	17x30x3	
3				Not used on this model		
4	500111		16	Screw	M12x55 8,8	
5	904231		32	Washer	13x24x2	
7	391290	B	1	Fork		
8				Not used on this model		
9				Not used on this model		
10	391981	E	1	Fork		
15	359511		2	Spacer block		
16	359512		N	Shim	T=5 mm	
17	359513		N	Shim	T=3 mm	
18	359514		N	Shim	T=1mm	
19				Not used on this model		
20				Not used on this model		
21				Not used on this model		
22	359232	G	1	Frame		
23	376537	H	1	Frame		
24			1	Articulated link (Page 42)		
26	925208		10	Screw	M20x90	
27	904233		10	Washer	21x36x3	
28	928850		10	Screw	M20-2,5x120 10,9	
29				Not used on this model		
30				Not used on this model		
31	947712		28	Screw		
32	904231		52	Washer	13x24x2	
33				Not used on this model		
34	500269		24	Screw	M12-1,75x50 10,9	
35	359314		1	Spacer ring		
			1	Bearing, offset		
36				Not used on this model		
37	359704		1	Yoke		
38	359589		1	Safety rod		
39	347119		2	Shaft		D
40	357488		1	Spring		
41	343775		2	Wire		
42	635061		3	Hair clip		D
43	500191		2	Screw	M10x14	
44	904230		2	Washer	10,5X22X2	
48	359588		1	Cover		
49	904357		6	Screw		
55	904233		10	Washer	21x36x3	
56	500109		4	Screw	M10-1,5x65 8,8	
57	904230		4	Washer	10,5X22X2	
58			6	Shock absorber		

B) Front left hand
E) Front right hand
G) Front
H) Rear

Covers, ladders

17498

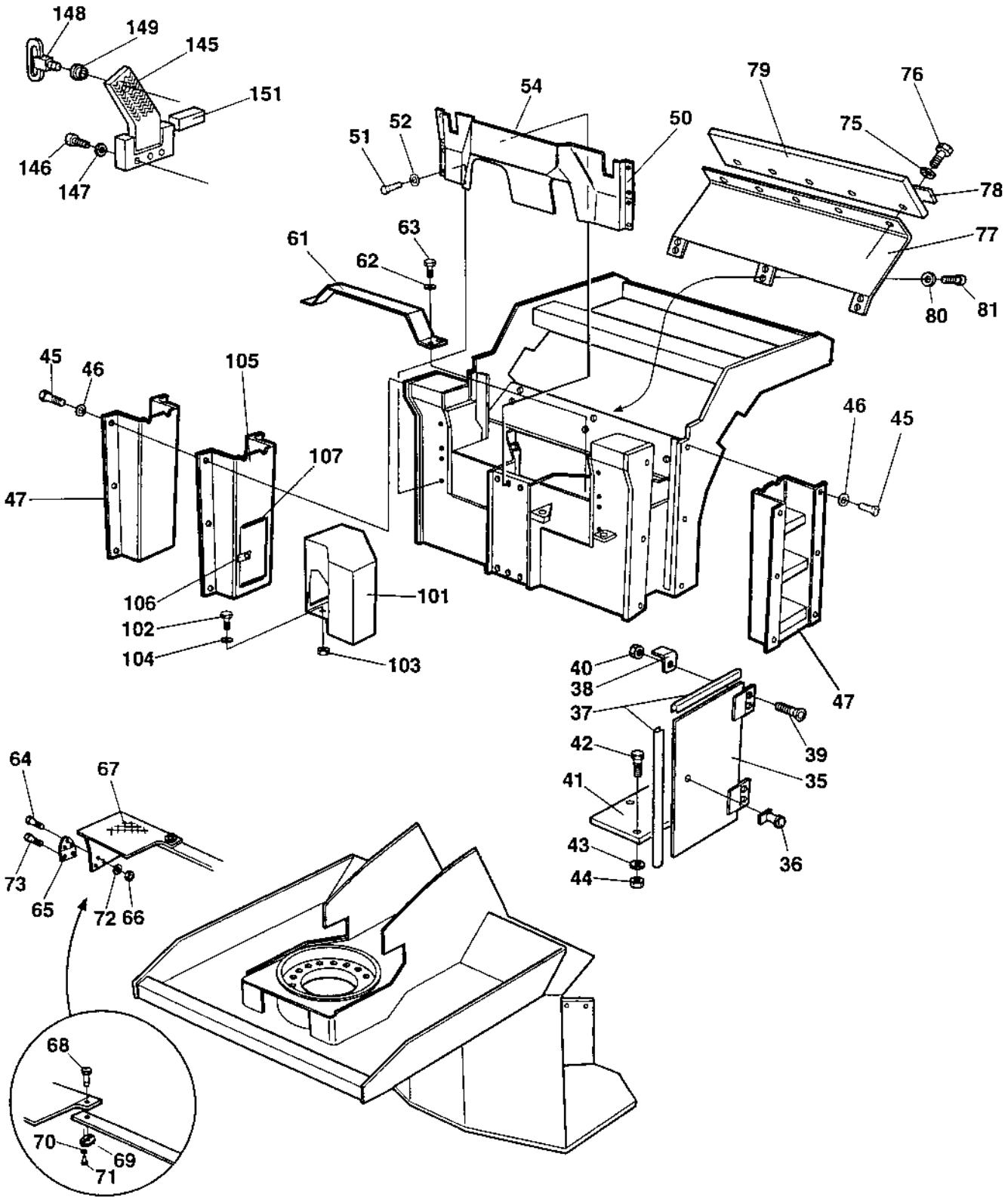

Covers, ladders

Ref. No.	Part No.	Rem.	Qty	Description		Code
35	372698		1	Door		
	386037		1	Door	with storage	
36	372658		1	Lock		
	902866		1	.Key	Marked "455"	D
37	202028	B	2XL	Edge trim		
38	372699		2	Spacer		
39	513028		4	Screw		
40	586002		4	Lock nut	M6	
41	372832		1	Cover		
42	500040		3	Screw	M6-1x20 8,8	
43	904228		3	Washer		
44	570004		3	Nut	M6	
45	500053		12	Screw	M8-1,25x20 8.8	
46	791304		12	Washer		
47	359583		2	Ladder		
50	384907		1	Cover		
51	500040		8	Screw	M6-1x20 8,8	
52	904639		8	Washer	6,7x14x1,5	
54	902166	C	1XL	Edge trim	3-5	
61	359565		1	Cover plate		
62	600008		4	Washer		
63	500043		4	Screw	M10x16H 8,8	
64	513008		6	Screw		
65	928041		2	Hinge		D
66	570004		6	Nut	M6	
67	372867		1	Step		
68	903733		1	Quick lock		
69	926985		1	Quick lock washer		
70	900569		2	Washer		
71	791709		2	Pop rivet		
72	904228		6	Washer		
73	904718		4	Wing screw		
75	904556		5	Washer	8,4x16x3,0	
76	500053		5	Screw	M8-1,25x20 8.8	
77	373124		1	Cover		
78	373130		1	Holder plate		
79	373129		1	Rubber protection		
80	904557		6	Washer	10,5x22x4	
81	500028		6	Screw	M10-1,5x25 8,8	
101	370688		1	Tool box		
102	500015		3	Screw	M6-1x30 8,8	
103	586002		3	Lock nut	M6	
104	615076		3	Washer	7,0x25x1,5	
105	373152		1	Ladder		
106	372658		1	Lock		
	902866		1	.Key	Marked "455"	D
107	202028	F	1XL	Edge trim		
145	370686	G	1	Step		
146	500030		3	Screw	M10-1,5x35H 8,8	
147	603023		3	Washer	M10,5x22x4	
148	475064		1	Lock		
149	927233		1	Nut		
151	370820		1	Rubber cloth		

B) L=1,4 m
C) Length as required
F) L=1,0 m
G) Front left

Scrapers, standard, front drum

18179

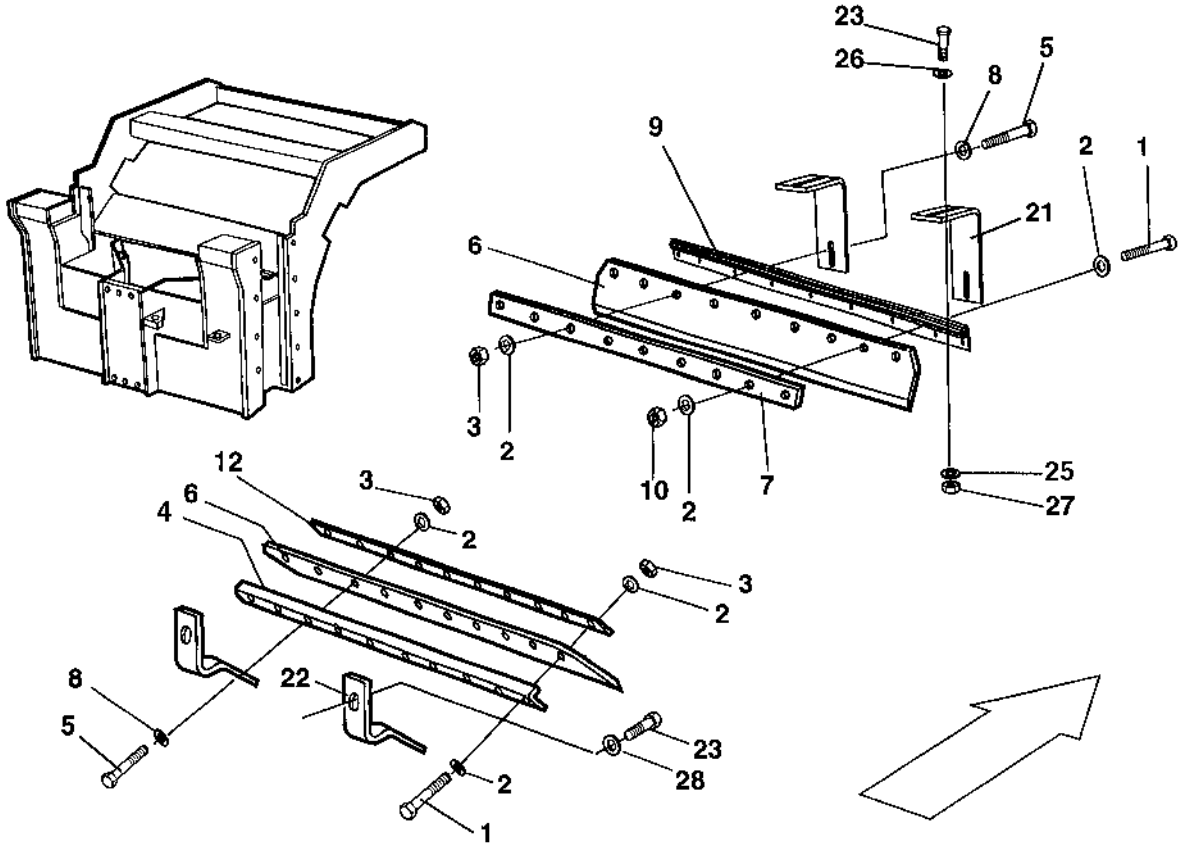

Scrapers, standard, front drum

Ref. No.	Part No.	Rem.	Qty	Description		Code
1	500056		14	Screw	M12x45 8,8	
2	904231		32	Washer	13x24x2	
3	586019		11	Lock nut	M12	
4	388487		1	Bracket		
5	500049		4	Screw	M12-1,75x60 8.8	
6	388489		1	Scraper		
7	359458		1	Scraper bracket		
8	904703		4	Washer	13x24x4	
9	388482		1	Sprinkler pipe		
10	791963		7	Lock nut	M12	
11	359351		1	Scraper		B
12	388488		1	Bracket		
21	378396		2	Scraper bracket		
22	359454		2	Scraper bracket		
23	500031		8	Screw	M10-1,5x40 8,8	
25	904557		4	Washer	10,5x22x4	
26	904230		4	Washer	10,5X22X2	
27	570006		4	Nut	M10	
28	359434		4	Spacer sleeve		

Scrapers, spring loaded, front drum

18182-1

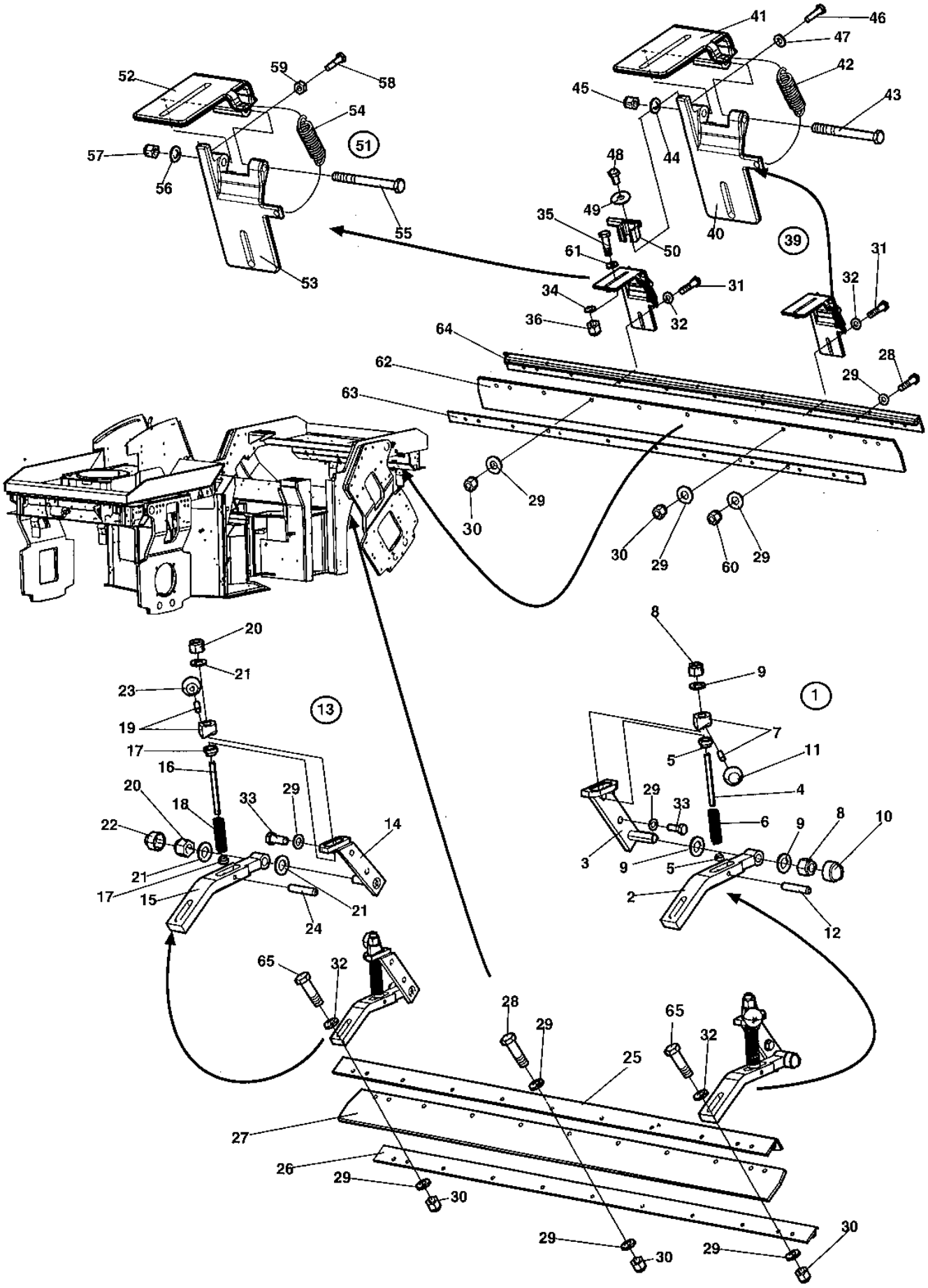

Scrapers, spring loaded, front drum

Ref. No.	Part No.	Rem.	Qty	Description	Code
1	388355	1	1	Scraper bracket	
	376725	2	1	Scraper bracket	
2			1	.Bracket	
3			1	.Bracket	
4	376728		1	.Shaft	
5	388344		2	.Guide	
6	388345		1	.Spring	
7	376729		1	.Release device	
8	586021		2	.Nut	M16
9	904232		3	.Washer	17x30x3
10	791755		1	.Nut protection	
11	312005		1	.Ball knob	
12	792129		1	.Pin	
13	388340	3	1	Scraper bracket	
	376726	4	1	Scraper bracket	
14			1	.Scraper bracket	
15			1	.Scraper bracket	
16	376728		1	.Shaft	
17	388344		2	.Guide	
18	388345		1	.Spring	
19	376729		1	.Release device	
20	586021		2	.Nut	M16
21	904232		3	.Washer	17x30x3
22	791755		1	.Nut protection	
23	312005		1	.Ball knob	
24	792129		1	.Pin	
25	388487		1	Bracket	
26	388488		2	Bracket	
27	388489		2	Scraper	
28	500056		14	Screw	M12x45 8,8
29	904231		36	Washer	13x24x2
30	586019		11	Lock nut	M12
31	500049		2	Screw	M12-1,75x60 8.8
32	904703		4	Washer	13x24x4
33	500046		4	Screw	M12x30H 8,8 FZB
34	904557		4	Washer	10,5x22x4
35	500031		4	Screw	M10-1,5x40 8,8
36	570006		4	Nut	M10
39	387690		1	Scraper bracket, cpl	
40			1	.Scraper bracket	
41			1	.Scraper bracket	
42	390809		1	.Extension spring	
43	500267		1	.Screw	M12x120 8,8 FZB
44	904231		1	.Washer	13x24x2
45	586019		1	.Lock nut	M12
46	500240		1	.Screw	M10x40H 8,8
47	570006		1	.Nut	M10
48	500003		1	.Screw	
49	928381		1	.Washer	6,4x18x1,6
50	388490		1	.Release device	
51	387693		1	Scraper bracket, cpl	
52			1	.Scraper bracket	
53			1	.Scraper bracket	
54	390809		1	.Extension spring	
55	500267		1	.Screw	M12x120 8,8 FZB
56	904231		1	.Washer	13x24x2

1) Replaced with PN 376725.
2) Replaces PN 388355.
3) Replaced by PN 376726.
4) Replaces PN 388340.

Scrapers, spring loaded, front drum

18182-1

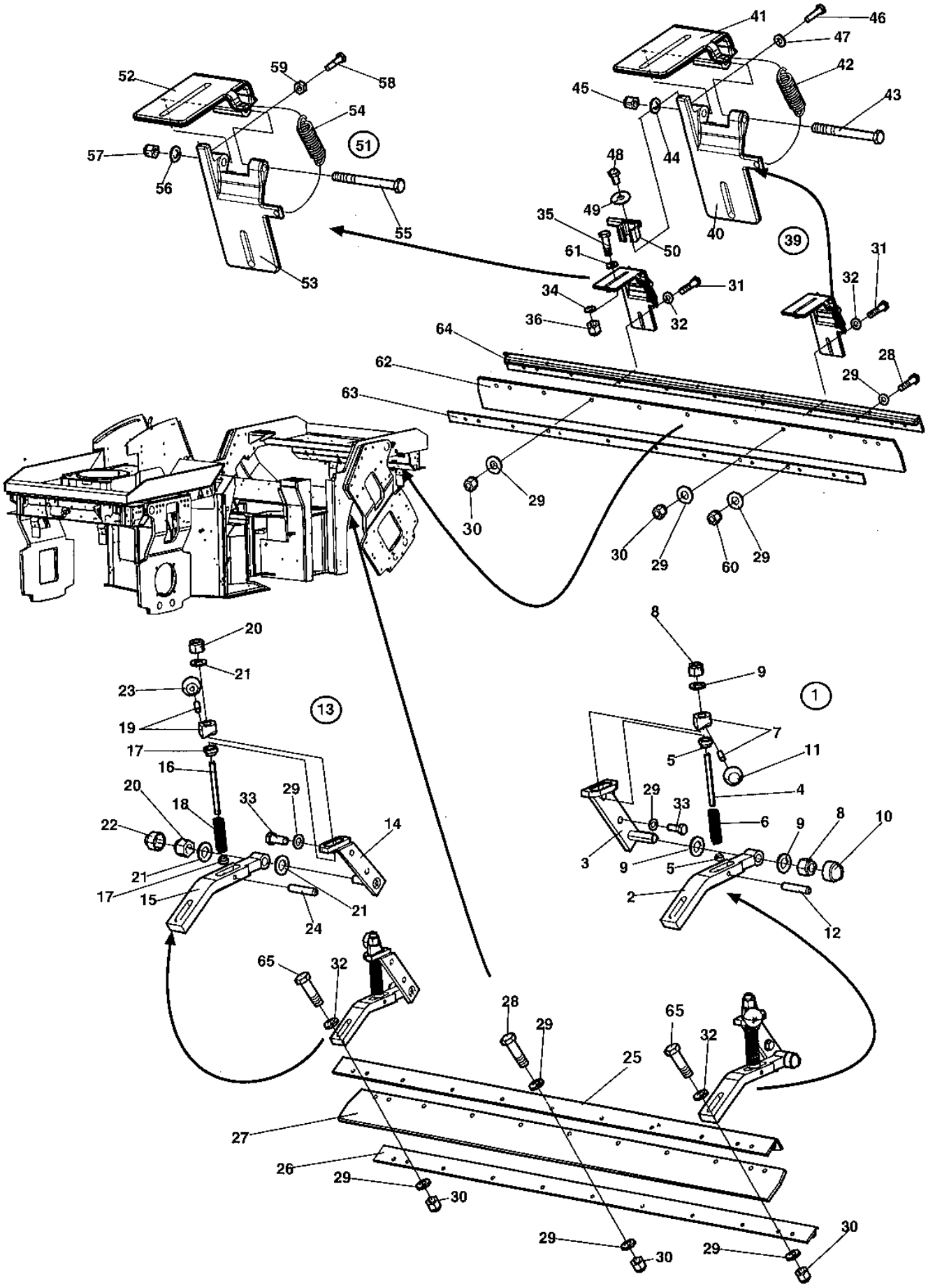

Scrapers, spring loaded, front drum

Ref. No.	Part No.	Rem.	Qty	Description		Code
57	586019		1	.Lock nut	M12	
58	500240		1	.Screw	M10x40H 8,8	
59	570006		1	.Nut	M10	
60	791963		7	Lock nut	M12	
61	904230		4	Washer	10,5X22X2	
62	359351		1	Scraper		B
63	359458		1	Scraper bracket		
64	388482		1	Sprinkler pipe		
65	500133		2	Screw	M12x70	

Scrapers, wheels

17663

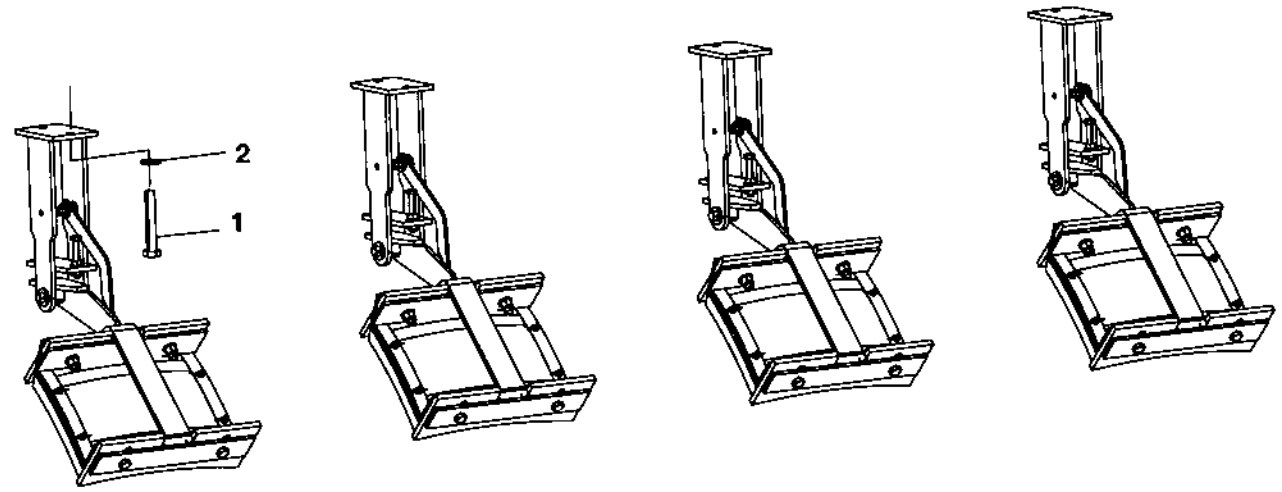

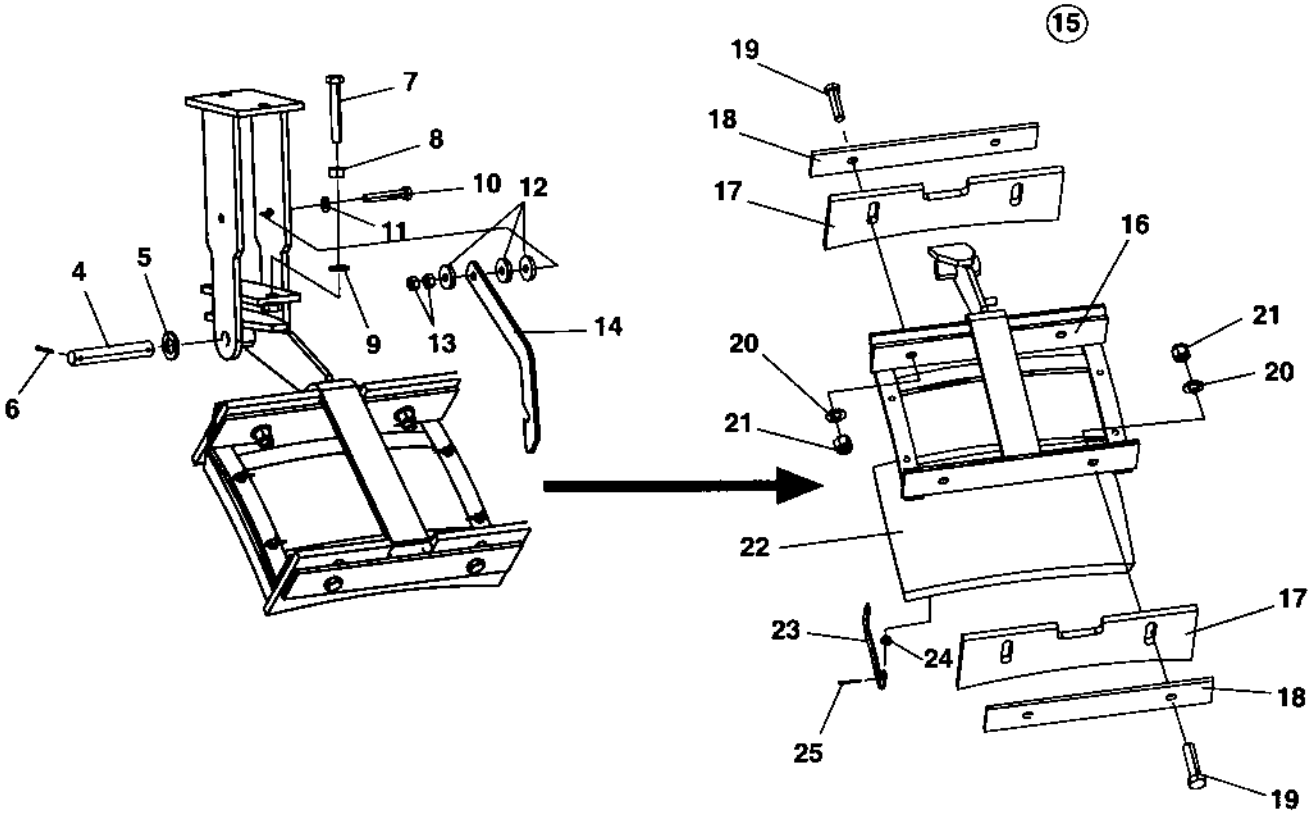

Scrapers, wheels

Ref. No.	Part No.	Rem.	Qty	Description		Code
1	500046		8	Screw	M12x30H 8,8 FZB	
2	904231		8	Washer	13x24x2	
3	383016		4	Holder		
4	251729		4	Shaft		
5	904232		8	Washer	17x30x3	
6	630008		8	Pin		D
7	500296		4	Screw		
8	570006		4	Nut	M10	
9	904230		4	Washer	10,5X22X2	
10	500025		4	Screw	M8-1,25x50 8,8	
11	904229		4	Washer		
12	603009		12	Washer		
13	570005		8	Nut	M8	
14	383852		4	Stop		
15			4	Scraper, cpl		
16	383389		1	.Scraper holder		
17	383390		1	.Scraper		
18	383391		1	.Bracket		
19	500056		4	.Screw	M12x45 8,8	
20	904231		4	.Washer	13x24x2	
21	586019		4	.Lock nut	M12	
22	263772		1	.Mat		B
23	267791		2	.Mat holder		D
24	904228		4	.Washer		
25	630035		4	.Split pin		D

Sprinkler mat Option

15809

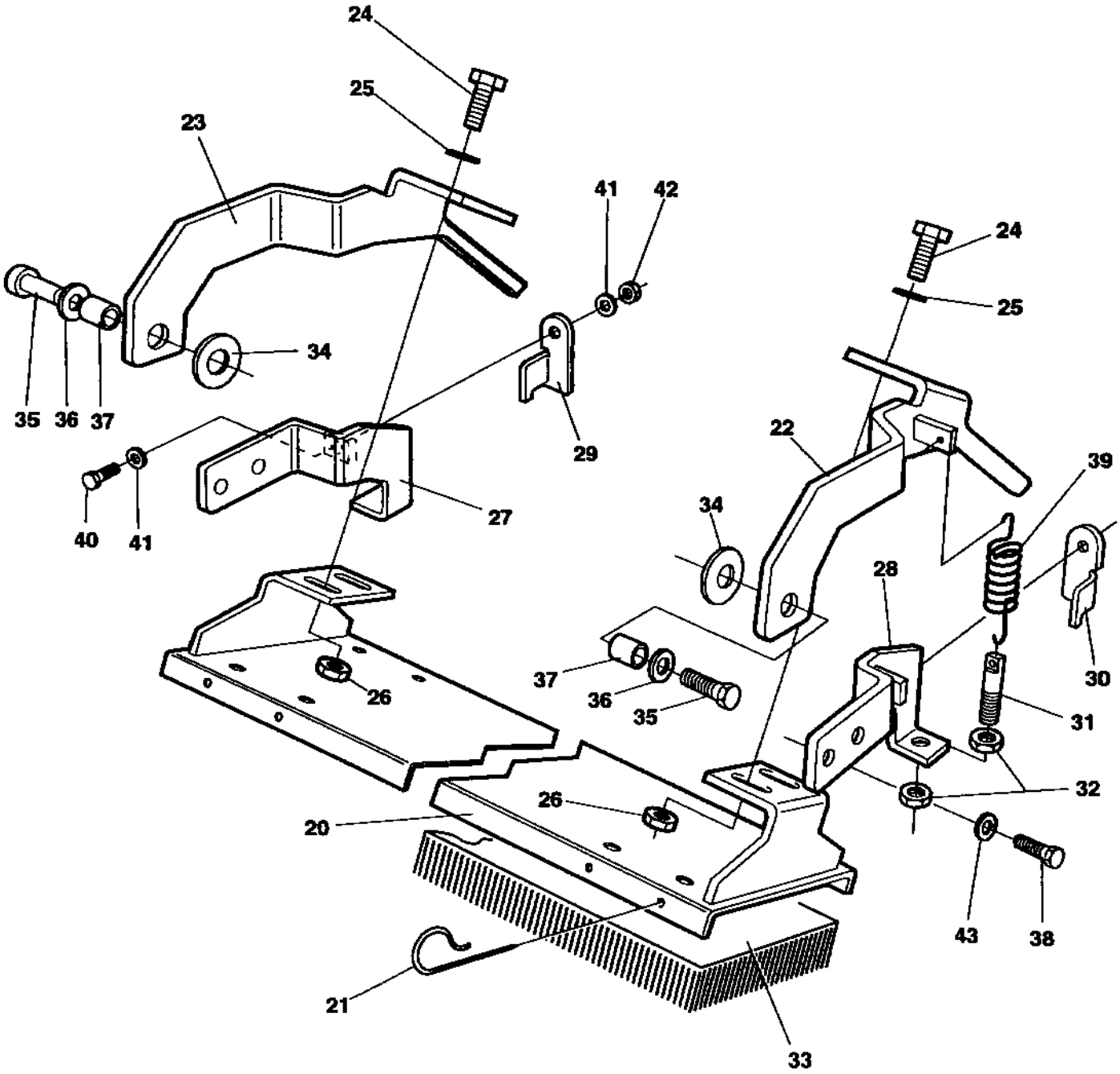

Sprinkler mat Option

Ref. No.	Part No.	Rem.	Qty	Description		Code
		2	1	Mat holder cpl		D
20	371353		1	.Mat holder		
21	358825		20	.Pin		
22	371760		1	.Rod end		
23	371757		1	.Rod end		
24	500047		4	.Screw	M8-1,25x35 8,8	
25	603019		8	.Washer		
26	570005		4	.Nut	M8	
27	371762		1	.Holder, left		
28	371765		1	.Holder, right		
29	371768		1	.Stop		
30	371769		1	.Stop		
31	358684		2	.Spring collar		
32	573005		4	.Nut		
33	903185		1	.Mat		B
34	615061		2	.Washer		
35	500031		2	.Screw	M10-1,5x40 8,8	
36	600008		2	.Washer		
37	371767		2	.Spacer		
38	500028	A	4	.Screw	M10-1,5x25 8,8	
39	371770		2	.Spring		
40	500075		2	.Screw	M6-1,0x25 8.8	
41	600004		4	.Washer		
42	586002		2	.Lock nut	M6	
43	600008		4	.Washer		

2) The quantity is for 1 (one) drum.
A) To frame side

Articulated link

15659-1

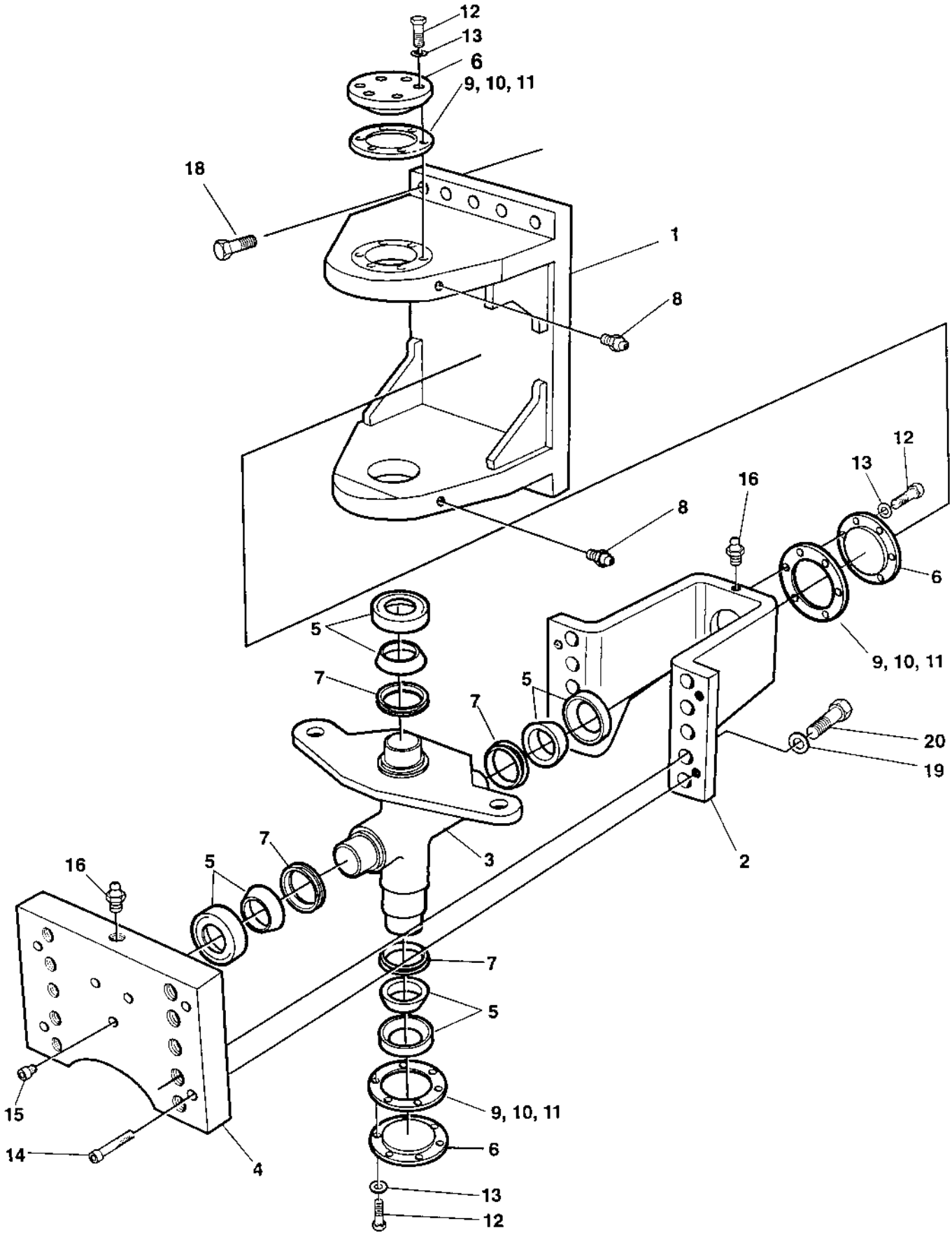

Articulated link

Ref. No.	Part No.	Rem.	Qty	Description		Code
1	375659		1	Hitch link		
2	359131		1	Hitch link		
3	359591		1	Hitch		
4	375661		1	Hitch bracket		
5	100040		4	Axial ball bearing		D
6	337042		3	Bearing cover		
7	167032		4	Lip-type oil seal		D
8	926214		2	Grease fitting		D
9	337045		N	Shim	T=1,0 mm	D
10	345874		N	Shim	T=0,35 mm	D
11	345875		N	Shim	T=0,10 mm	D
12	500037		18	Screw	M12-1,75x35 8,8	
13	904231		18	Washer	13x24x2	
14	508042		4	Screw		
15	910995		3	Stop screw		
16	929863		2	Grease nipple		D
18			10	Screw		D
19			10	Washer		D
20			10	Screw		D

Structure

18286

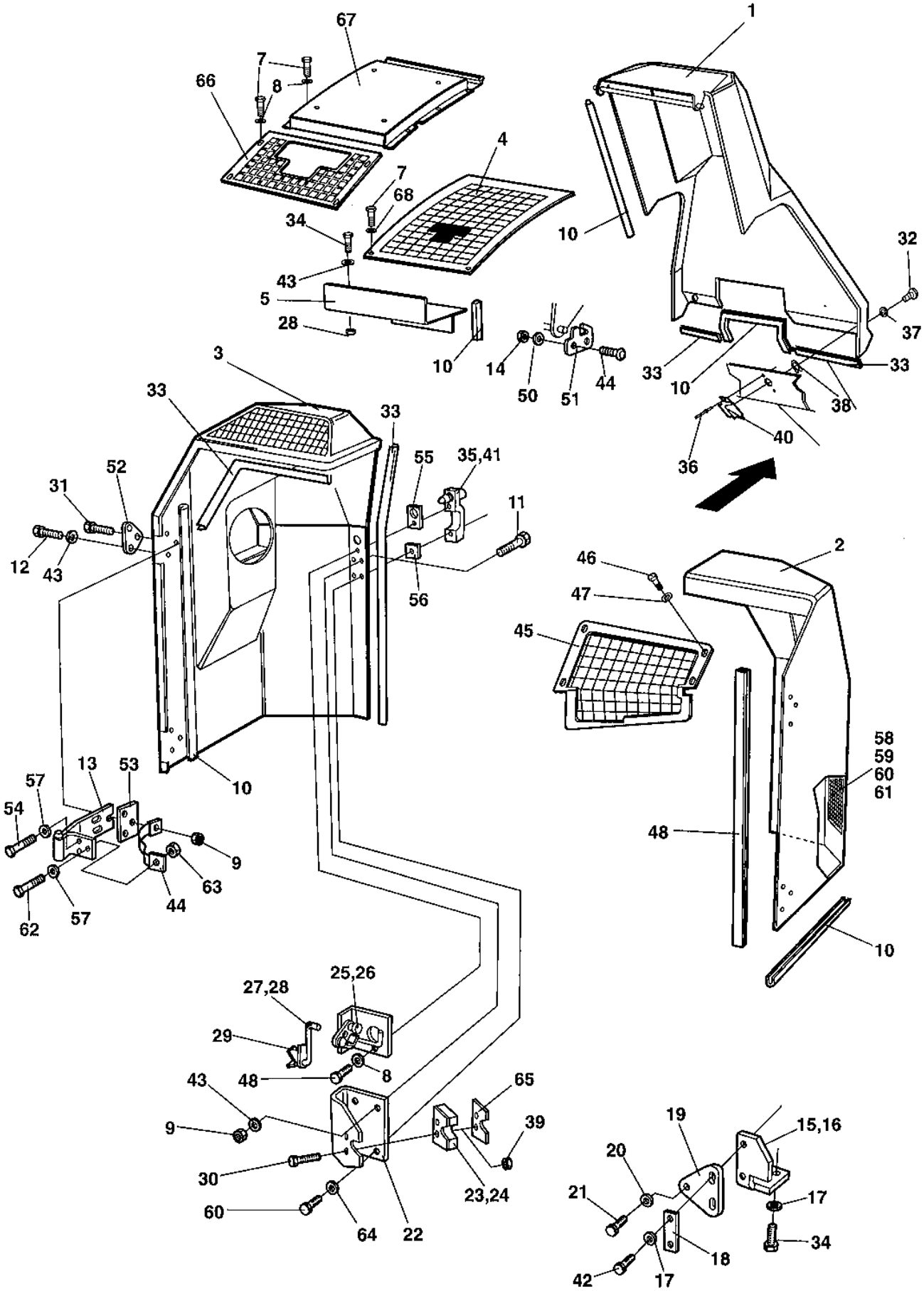

Structure

Ref. No.	Part No.	Rem.	Qty	Description		Code
1	386994		1	Cover		
	945231		1	Center cover w absorbent, cpl	CE-2006	
2	945227	A	1	Engine hood, cpl		
	945229	A	1	Engine hood w absorbent, cpl	CE-2006	
3	945228	B	1	Engine hood, cpl		
	945230	B	1	Engine hood w absorbent, cpl	CE-2006	
	950279	B,1	1	Engine hood, cpl	Tier 3	
	387087		1	.Grid		
	901767		6	.Screw	ST3,5x9,5 Black	
4	374495		1	Grid		
5	375252		1	Cover plate		
6	902166	C	1XL	Edge trim	3-5	
7	500013		10	Screw	M6-1x16 8,8	
8	904228		2	Washer		
9	586003		10	Lock nut	M8	
10	902166	C	6XL	Edge trim	3-5	
11	902520		6	Screw		
12	500047		8	Screw	M8-1,25x35 8,8	
13	381675		4	Hinge		
14	586002		4	Lock nut	M6	
15	372898	A	1	Bracket		
16	372894	B	1	Bracket		
17	904734		8	Washer	8,4x26x4	
18	371523		2	Bracket		
19	372893		2	Bracket		
20	387487		2	Lock pin		
21	904231		2	Washer	13x24x2	
22	371659		2	Bracket		
23	371380	E	1	Lock		
24	371381	F	1	Lock		D
25	371449	F	1	Locking device		
26	371450	E	1	Locking device		
27	371451	E	1	Coupling link		
28	371452	F	1	Coupling link		
29	371569		2	Locking device		
30	535053		4	Screw		
31	500024		4	Screw	M8x45	
32	903340		2	Trunnion		
33	202057	C	4XL	Edge trim		D
34	500053		8	Screw	M8-1,25x20 8.8	
35	371389	E	1	Grab handle		
	902866		1	.Key	Marked "455"	D
36	923253		4	Rivet		
37	903341		2	Washer		
	904076		1XL	.Edge trim		
38	903857		2	Washer		
39	902284		4	Nut	M5	
40	903344		2	Lock		
41	371390	F	1	Grab handle		
	902866		1	.Key	Marked "455"	D
42	500021		4	Screw	M8-1,25x25 8.8	
43	904229		20	Washer		
44	373422		4	Metal strapping		

1) Valid for machines with Tier 3 engine, Deutz TD 2011 L04 I.
A) Right
B) Left
C) Length as required
E) Right hood
F) Left hood

Structure

18286

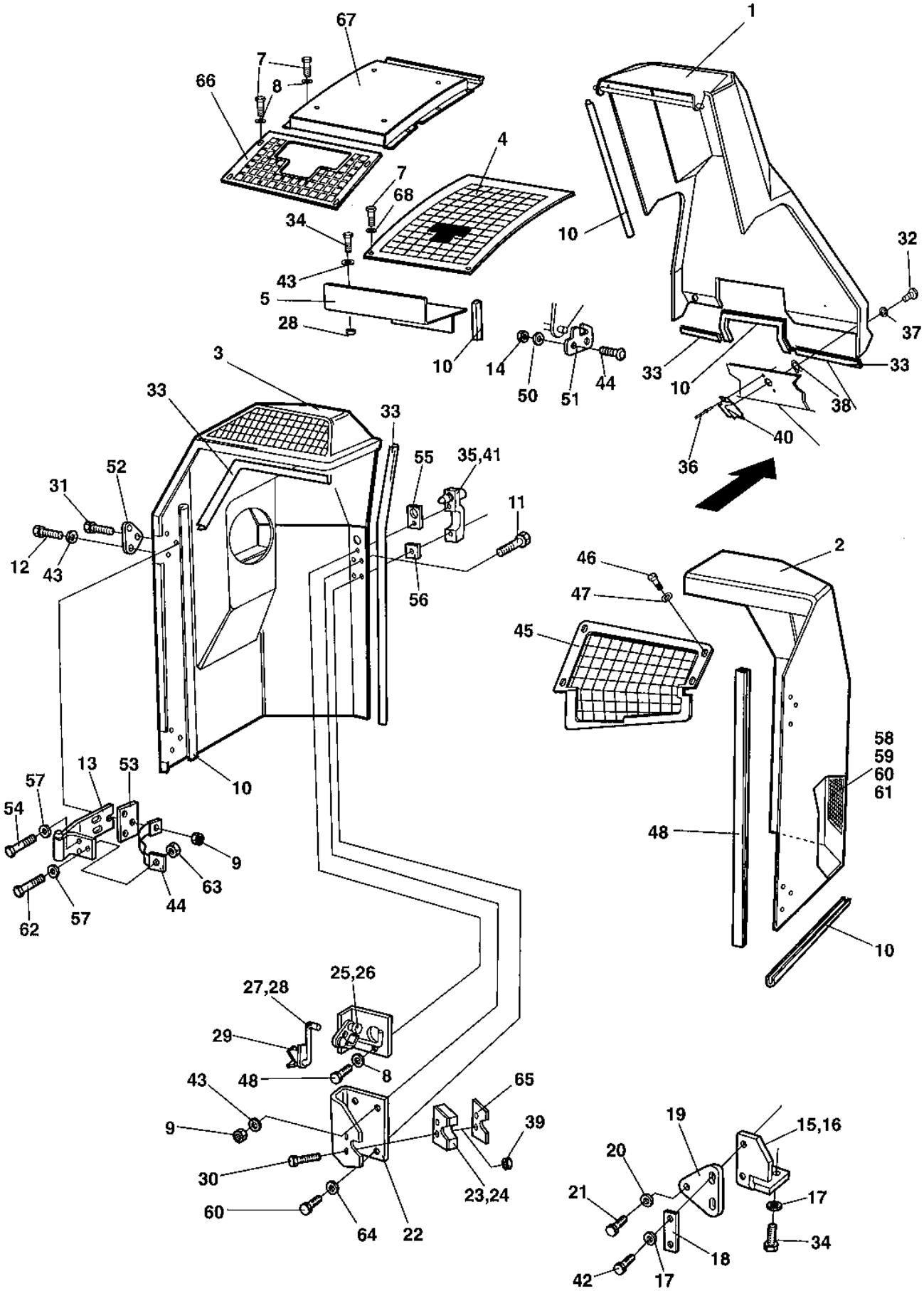

Ref. No.	Part No.	Rem.	Qty	Description	Code
45	380162		1	Grid	
46	500012		4	Screw	M6x12
47	904735		4	Washer	
48	287724	C	2XL	Edge trim	
49	903856		4	Bolt	M06x30
50	904735		4	Washer	
51	372126		2	Cover holder	
52	372675		4	Washer	
53	372566		4	Bracket	
54	500021		8	Screw	M8-1,25x25 8.8
55	903937		2	Rubber gasket	
56	903936		2	Rubber gasket	
57	904556		12	Washer	8,4x16x3,0
58	374496		1	Grid	
59	904228		12	Washer	
60	500075		10	Screw	M6-1,0x25 8.8
61	586002		6	Lock nut	M6
62	500022		4	Screw	M8-1,25x30 8,8
63	570005		4	Nut	M8
64	904639		2	Washer	6,7x14x1,5
65	388026		2	Guide	
66	379509		1	Grid	CE-2006
67	378973		1	Exhaust hood, cpl	CE-2006
	378849		1	.Absorbent	
	904209		4	.Screw	
	373476		4	.Insulating washer	
	904076		1XL	.Edge trim	
68	928381		10	Washer	6,4x18x1,6

C) Length as required

Noise suppression Left hood

17260

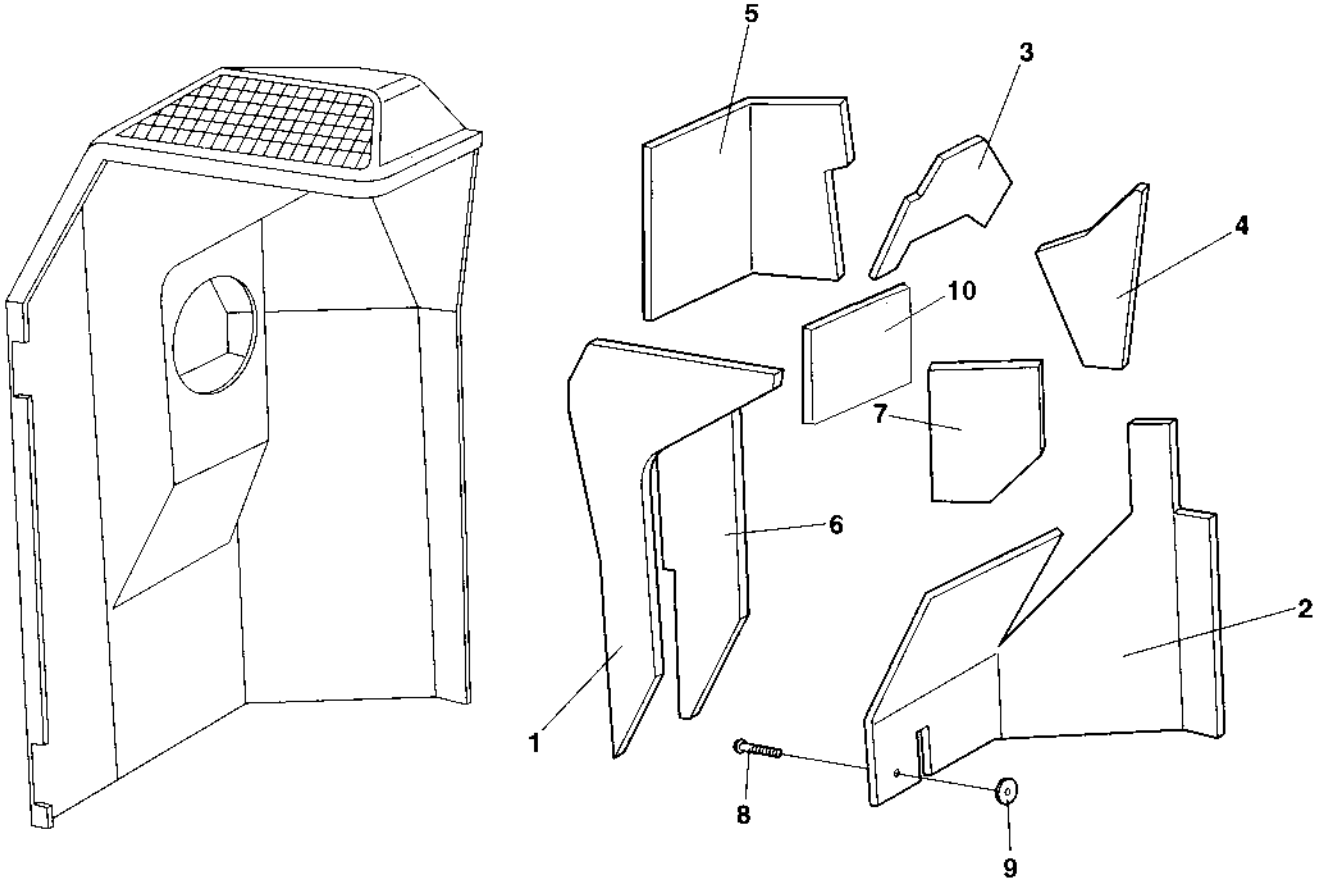

Noise suppression Left hood

Ref. No.	Part No.	Rem.	Qty	Description	Code
1	374787		1	Absorbent	
2	374788		1	Absorbent	
3	374789		1	Absorbent	
4	374790		1	Absorbent	
5	374978		1	Absorbent	
6	374979		1	Absorbent	
7	373187		1	Absorbent	
8	904209		16	Screw	
9	373476		18	Insulating washer	
10	379457		1	Absorbent	CE-2006

Sprinkler system Tanks

18278

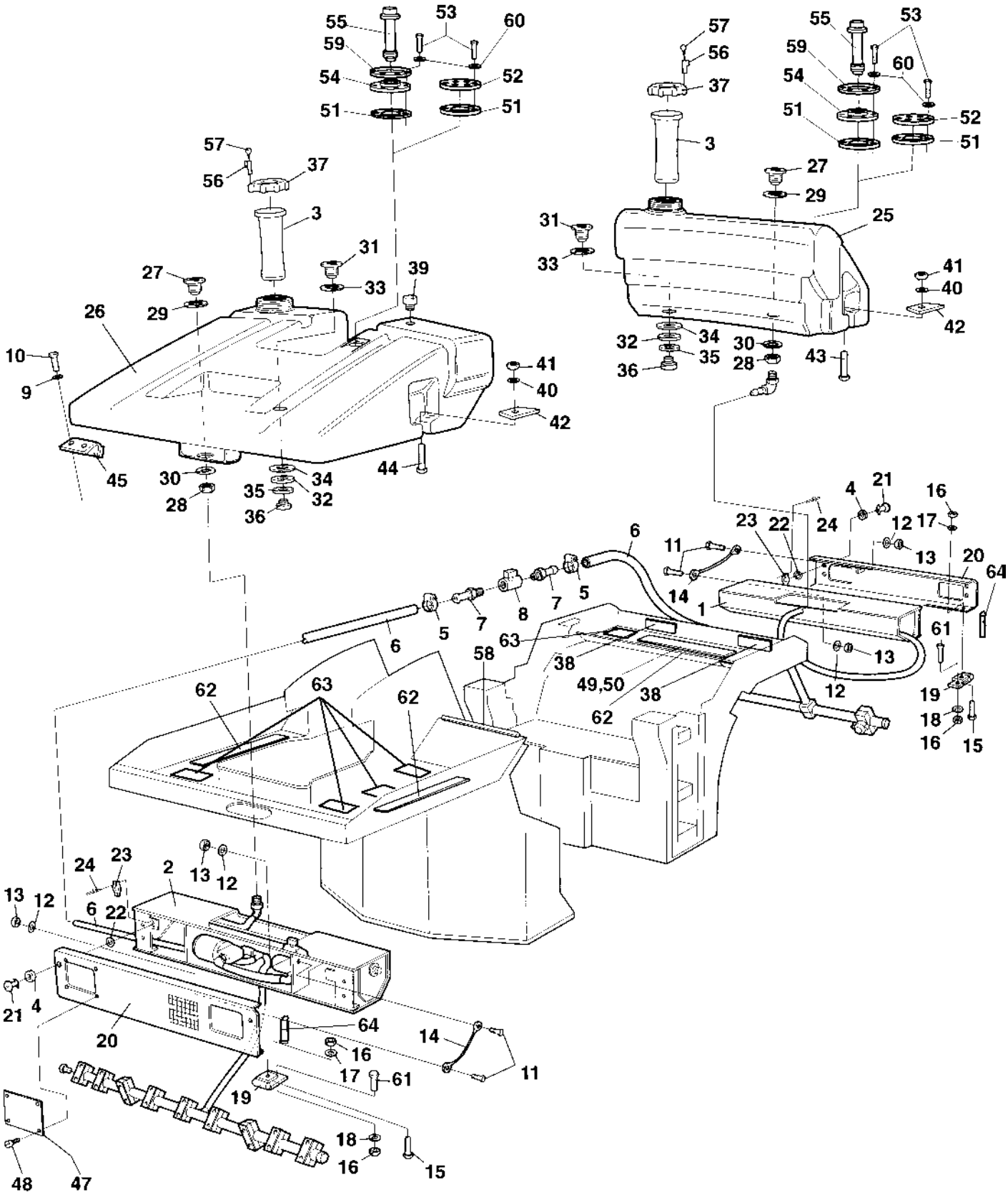

Sprinkler system Tanks

Ref. No.	Part No.	Rem.	Qty	Description		Code
1				Sprinkler system, front (Page 54)		
2				Sprinkler system, rear Up to 61812162 (Page 58)		
			1	Sprinkler system, rear From 61812163 (Page 62)		
3	358846		2	Strainer		D
4	904913		4	Washer	Neopren	
5	313001		2	Hose clamp		
6	244054	E	2XL	Hose reinforced		
7	924544		2	Hose connection		
8	925599		1	Valve		
9	904556		4	Washer	8,4x16x3,0	
10	500022		4	Screw	M8-1,25x30 8,8	
11	500053		4	Screw	M8-1,25x20 8.8	
12	904229		4	Washer		
13	586003		4	Lock nut	M8	
14	381619		2	Wire		
15	513012		8	Screw	M6x20 10,9	
16	586002		20	Lock nut	M6	
17	928467		8	Washer		
18	904228		12	Washer		
19	928041		4	Hinge		D
20	385339		2	Cover		
21	904914		4	Tap		
22	903342		4	Retaining ring		
23	903344		4	Lock		
24	923253		8	Rivet		
25	359001	A	1	Water tank		
26	359002	B	1	Water tank		
	902916	3	1	.Adapter kit		
27			1	..Connector		
28			1	..Nut		
29			1	..Sealing		
30			1	..Washer		
	902917	3	1	.Adapter kit		
31			1	..Connector		
32			1	..Nut		
33			1	..Sealing		
34			1	..Washer		
	902918	3	1	.Plug kit		
35			1	..Gasket		
36			1	..Plug		
37	359003	3	1	.Cap		D
38	202041	F	2XL	Rubber strip		
39	357138		1	Ventilating filter		A
40	904232		4	Washer	17x30x3	
41	570008		4	Nut	M16 -8	
42	359444		4	Holder, cpl		
43	904405		2	Screw		
44	904405		2	Screw		
45	359446		2	Holder		
47	374545		4	Cover		
48	791916		16	Screw		
49	382337		3	Rubber cloth		

3) Included in both sprinkling tanks, item 25 & 26
A) Front
B) Rear
E) Length as required
F) L=645 mm

Sprinkler system Tanks

18278

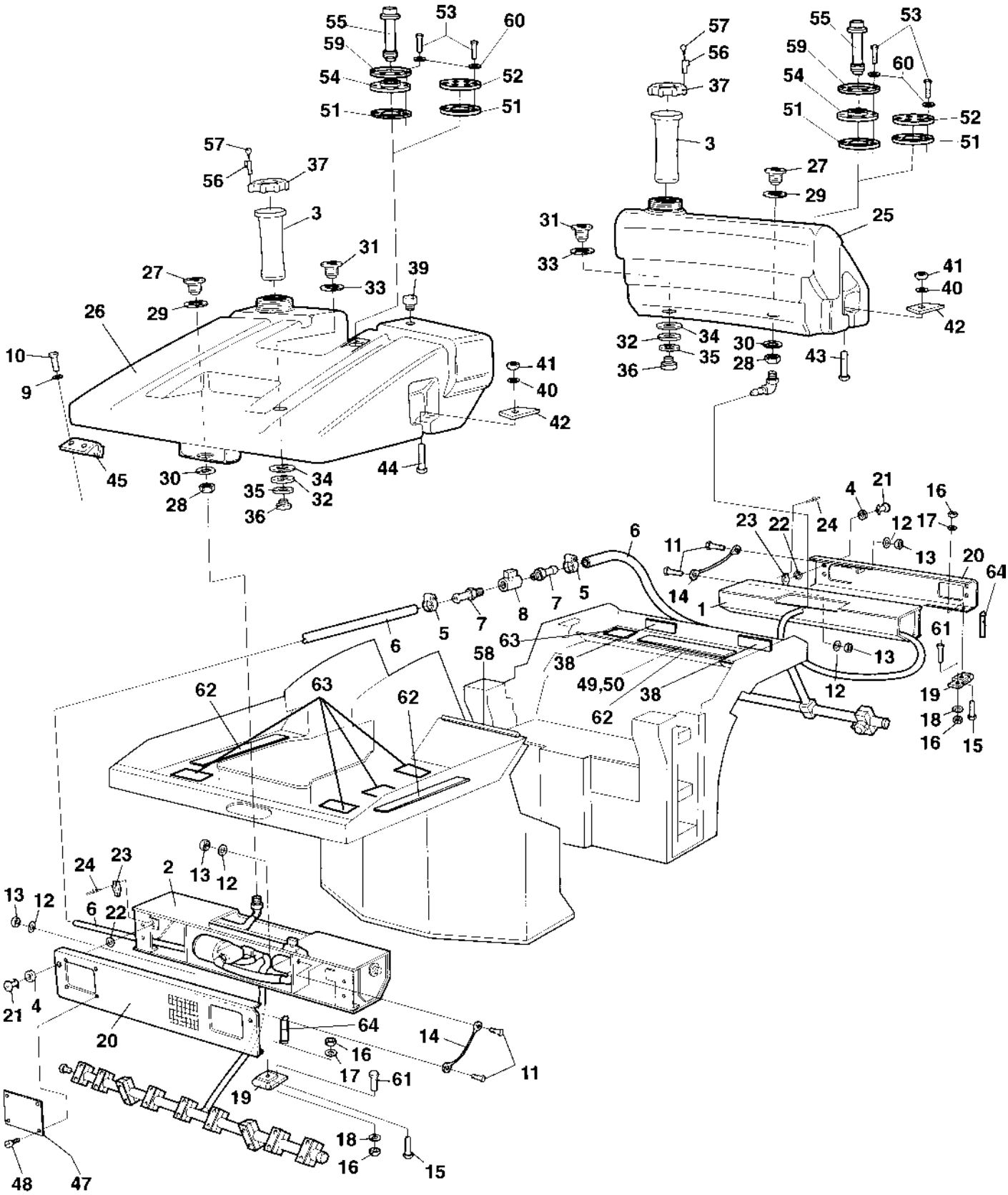

Sprinkler system Tanks

Ref. No.	Part No.	Rem.	Qty	Description		Code
50	904901		3	Tape		
51	370746		2	Gasket		
52	370747		2	Cover		
53	904206		10	Screw	M6X16	
54	370745	C	2	Flange, cpl	Gasket included	
55	382157	C	2	Level sender		
56	370699	C	2	Lock		
57		D	1	.Key		
58	202043	E	2XL	Rubber strip		
59	372718		2	Lid		
60	904228		10	Washer		
61	928784		12	Screw		
62	381666		4	Cellular plastic sheet		
63	381665		7	Cellular plastic sheet		
64	297018	E	4XL	Rubber strip		

C) Option
D) 2 pcs incl. in 56
E) Length as required

Sprinkler system, front

18474-1

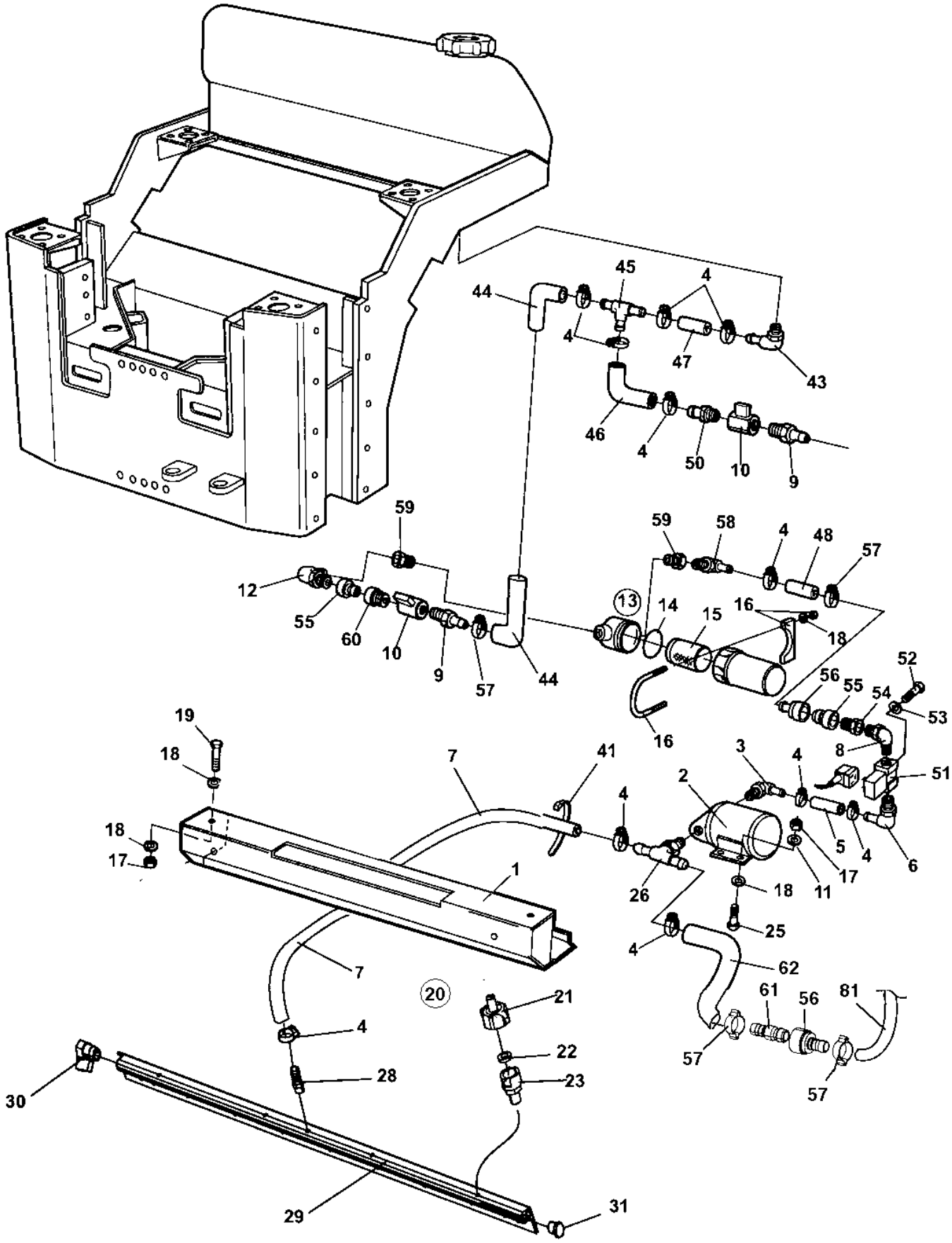

Sprinkler system, front

Ref. No.	Part No.	Rem.	Qty	Description		Code
1	382425		1	Sprinkler box		
2	383697	3	1	Water pump		
3	923734		1	Hose connection		
4	313002		10	Hose clamp	13-20 mm	
5	904878	B	1XL	Hose reinforced		
6	901431		1	Hose connection		
7	904878	A	1XL	Hose reinforced		
8	791134		1	Elbow 90		
9	924544		2	Hose connection		
10	925599		2	Valve		
11	904556		4	Washer	8,4x16x3,0	
12	901298		1	Connector		
13	791130	5	1	Strainer cpl Up to 61x12162		
	393272		1	Strainer cpl From 61x12163		
14	938307		1	.O-ring Up to 61x12162		
	791959		1	.O-ring From 61x12163		
15	938306		1	.Strainer Up to 61x12162		
	791949		1	.Filter element From 61x12163		B
16	313036		1	Clamp Up to 61x12162		D
	313086		1	Clamp From 61x12163		
17	570005		12	Nut	M8	
18	904229		12	Washer		
19	500022		6	Screw	M8-1,25x30 8,8	
20	392011		3	Spraying nozzle, cpl		
21	392509		1	.Retainer, nozzle, strainer, yellow	0.8	
	393697		1	..Nozzle and strainer, yellow	0.8	
	390615	N	1	..Nozzle and strainer, blue	1.0	
	390616	N	1	..Nozzle and strainer, red	1.2	
	390619	N	1	..Nozzle and strainer, brown	1.3	
22	392510		1	.Gasket		
23	392508		1	.Housing		
25	500020		4	Screw	M8-1,25x22 8,8	
26	903626		1	Connector		
27	382752		2	Bracket		
28	791977		1	Hose connection		
29		2	1	Sprinkler pipe/bracket		
30	233215		1	Ball valve		
31	791974		1	Plug threaded		
41	313041		N	Cable ties	L=186 mm	
43	924996		1	Hose connection		D
	924544	4	1	Hose connection		
44	904878	E	1XL	Hose reinforced		
	904878	J,4	1XL	Hose reinforced		

2) See section for scrapers.
3) New version with Cannon connection
4) Valid for rollers with eyelet.
5) Replaced as Spare part by PN 393328, Water strainer rebuild kit.
A) L=0,38 m
B) L=0,20 m
E) L=0,08 m
J) L=0,40 m
N) Option

Sprinkler system, front

18474-1

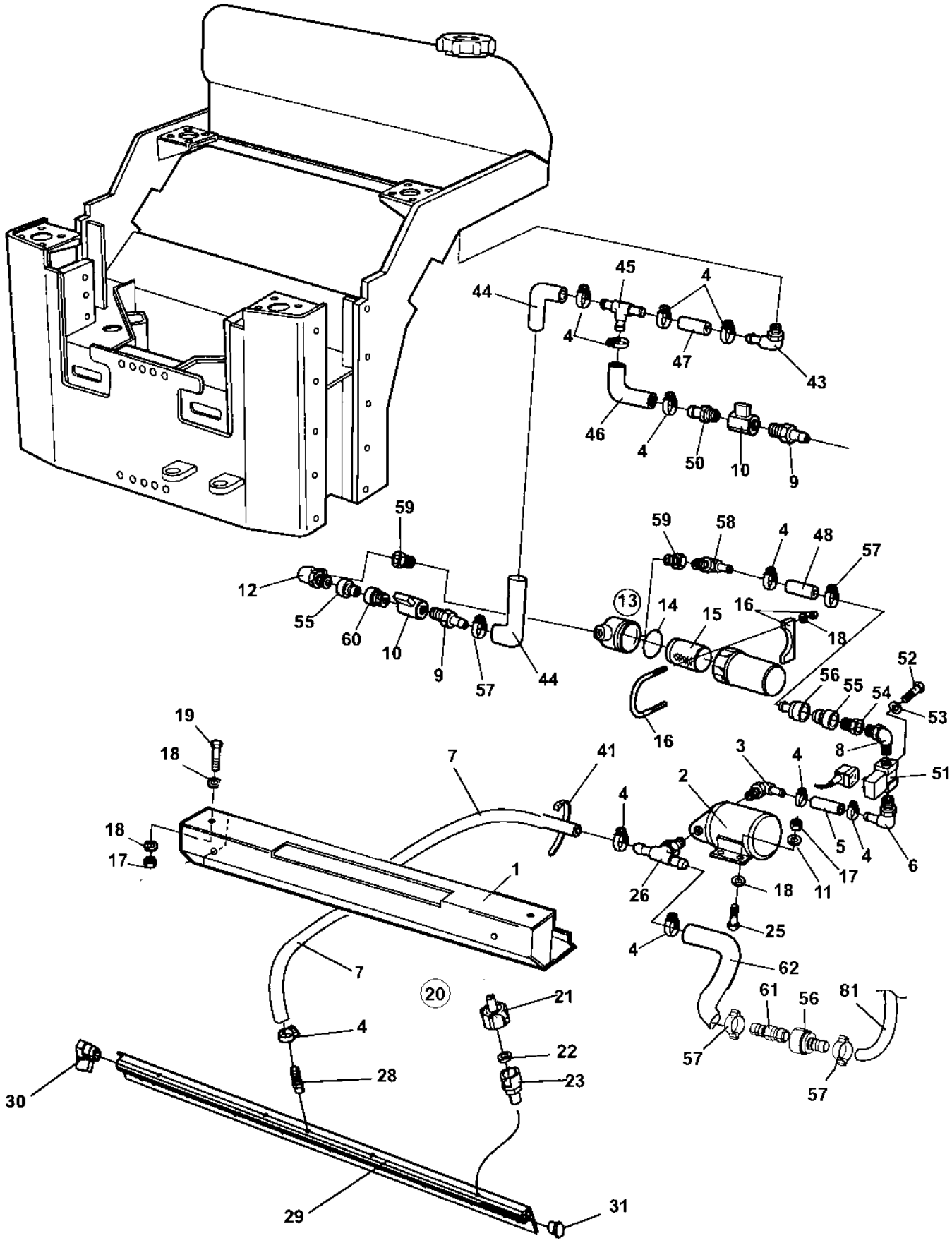

Sprinkler system, front

Ref. No.	Part No.	Rem.	Qty	Description		Code
45	923735		1	Hose connection		
46	904878	F	1XL	Hose reinforced		
47	904878	G	1XL	Hose reinforced		
	904878	K,4	1XL	Hose reinforced		
48	904878	H	1XL	Hose reinforced		
	904878	L,4	1XL	Hose reinforced		
50	924544		1	Hose connection		
51	287713		1	Solenoid valve		
52	500002		2	Screw	M4-0,7x12H 8.8	
53	904698		2	Washer		
54	791135		1	Connector		
55	791128		2	Quick coupling		
56	791126		2	Quick coupling		
57	814071		5	Hose clamp		
58	924996		1	Hose connection		D
59	903886		2	Adapter		
60	791125		1	Quick coupling		
61	791127		1	Quick coupling		
62	904878	O	1XL	Hose reinforced		
80		I	1	Sprinkling tank, front		
81		I	1	Plastic hose		

4) Valid for rollers with eyelet.
F) L=0,78 m
G) L=0,17 m
H) L=0,53 m
I) See sprinkler systems, tanks
K) L=0,12 m
L) L=0,60 m
O) L=0,3 m

Sprinkler system, rear

17666-1

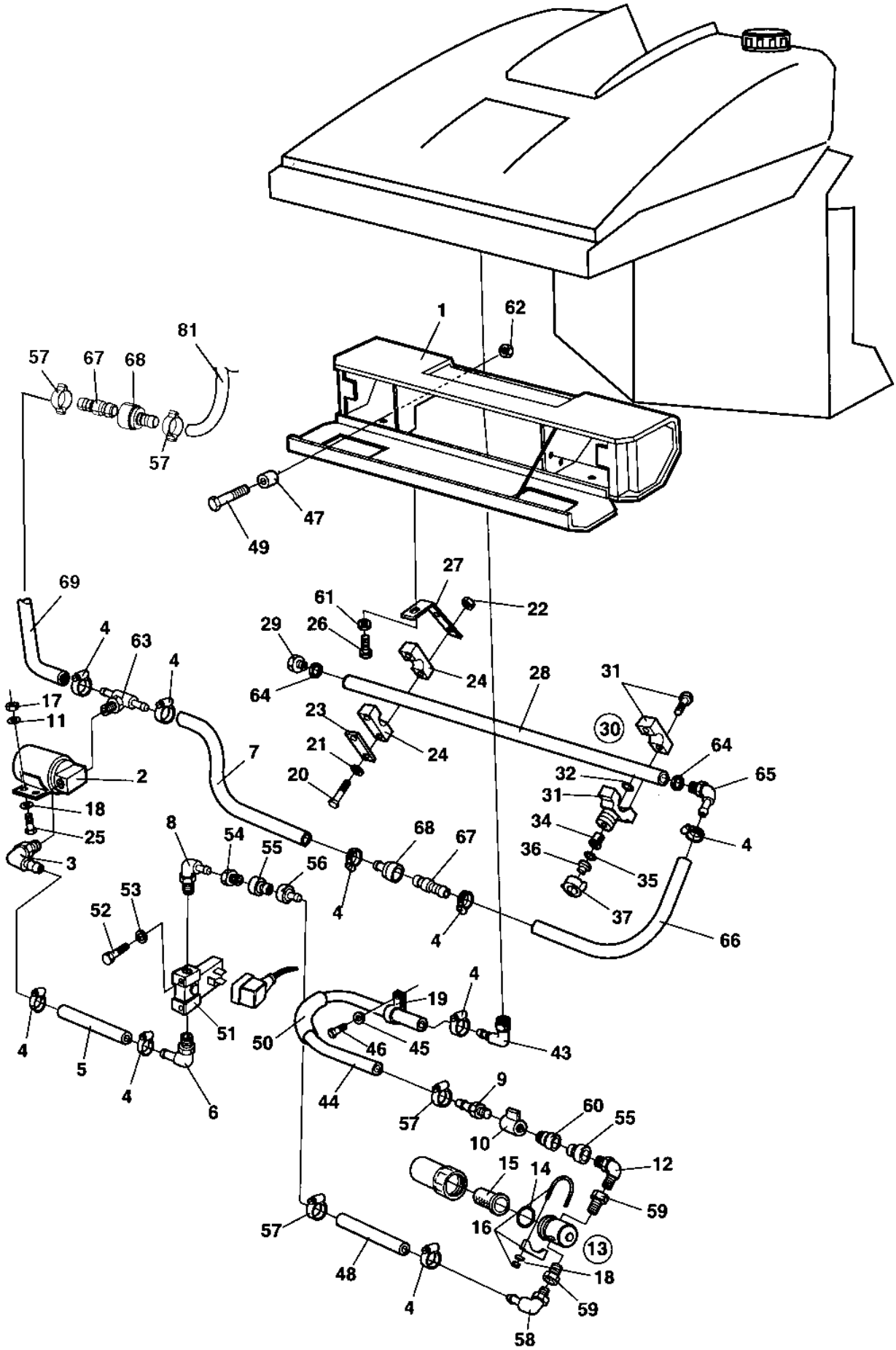

Sprinkler system, rear

Ref. No.	Part No.	Rem.	Qty	Description		Code
1	382425			Sprinkler box		
2	383697	3	1	Water pump		
3	923734		1	Hose connection		
4	313002		10	Hose clamp	13-20 mm	
5	904878	B	1XL	Hose reinforced		
6	901431		1	Hose connection		
7	904878	A	1XL	Hose reinforced		
8	791134		1	Elbow 90		
9	924544		1	Hose connection		
10	925599		1	Valve		
11	904556		4	Washer	8,4x16x3,0	
12	901298		1	Connector		
13	791130		1	Strainer cpl		
14	938307		1	.O-ring		
15	938306		1	.Strainer		
16	313036		1	Clamp		D
17	570005		10	Nut	M8	
18	904229		9	Washer		
19	921047		1	Clamp		
20	500016		4	Screw	M6-1,0x55 8,8	
21	904228		4	Washer		
22	586002		4	Lock nut	M6	
23	923859		2	Cover plate		
24	923876		2	Clamp		
25	500053		4	Screw	M8-1,25x20 8.8	
26	500051		2	Screw	M12-1,75x25 8,8	
27	384820		2	Bracket		
28	383129		1	Sprinkler pipe		
29	384775		1	Plug		
30	382586		4	Sprinkler, cpl		D
31	923680		1	.Nozzle clamp		D
32	923962		1	..O-ring		D
34	499444		1	.Strainer		D
35	904116		1	.Gasket		
36	903540		1	.Nozzle body	Green	D
37	923681		1	.Quick coupling, black		
38	923680		1	Nozzle clamp		D
39	923962		1	.O-ring		D
40	904116		1	Gasket		
41	929419		1	Coupling		
42	901431		1	Hose connection		
43	924996		1	Hose connection		D
44	904878	D	1XL	Hose reinforced		
45	904281		1	Washer	5,3x10x1	
46	500041		1	Screw		
47	359434		8	Spacer sleeve		
48	904878	E	1XL	Hose reinforced		
49	500031		8	Screw	M10-1,5x40 8,8	
50	901191	F	1XL	Protective hose		
51	287713		1	Solenoid valve		
52	500002		2	Screw	M4-0,7x12H 8.8	

3) New version with Cannon connection
A) L=0,52 m
B) L=0,20 m
D) L=0,65 m
E) L=0,53 m
F) L=0,60 m

Sprinkler system, rear

17666-1

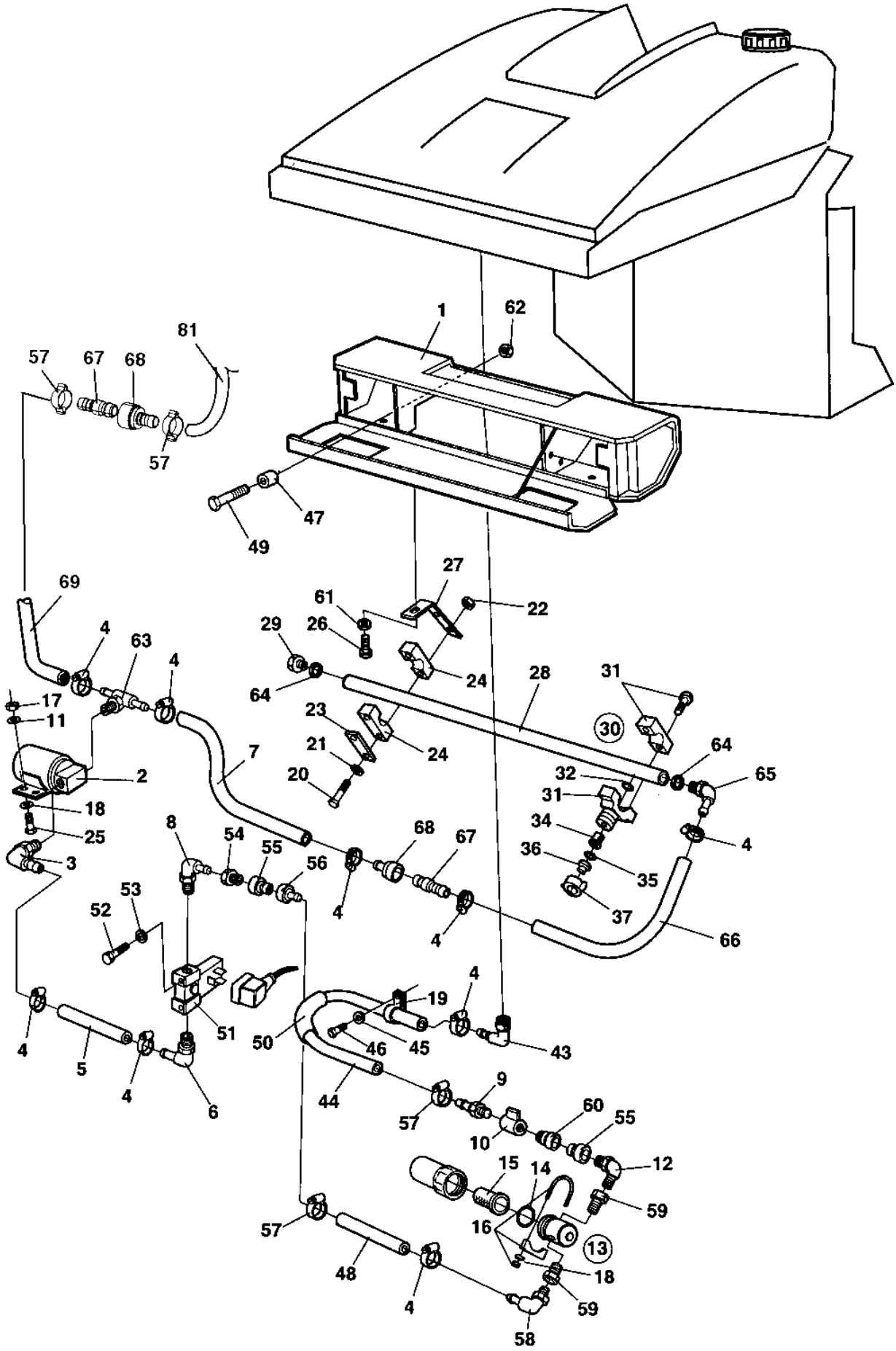

Sprinkler system, rear

Ref. No.	Part No.	Rem.	Qty	Description		Code
53	904698		2	Washer		
54	791135		1	Connector		
55	791128		2	Quick coupling		
56	791126		1	Quick coupling		
57	814071		4	Hose clamp		
58	924996		1	Hose connection		D
59	903886		2	Adapter		
60	791125		1	Quick coupling		
61	904703		2	Washer	13x24x4	
62	570006		2	Nut	M10	
63	903626		1	Connector		
64	903769		2	Sealing		
65	923684		1	Hose connection		
66	904878	C	1XL	Hose reinforced		
67	791127		1	Quick coupling		
68	791126		1	Quick coupling		
69	904878	I	1XL	Hose reinforced		
80		H	1	Sprinkling tank, rear		
81		H	1	Plastic hose		

C) L=0,50 m
H) See Sprinkler systems, tanks
I) L=0,30 m

Sprinkler system, rear

17666-1

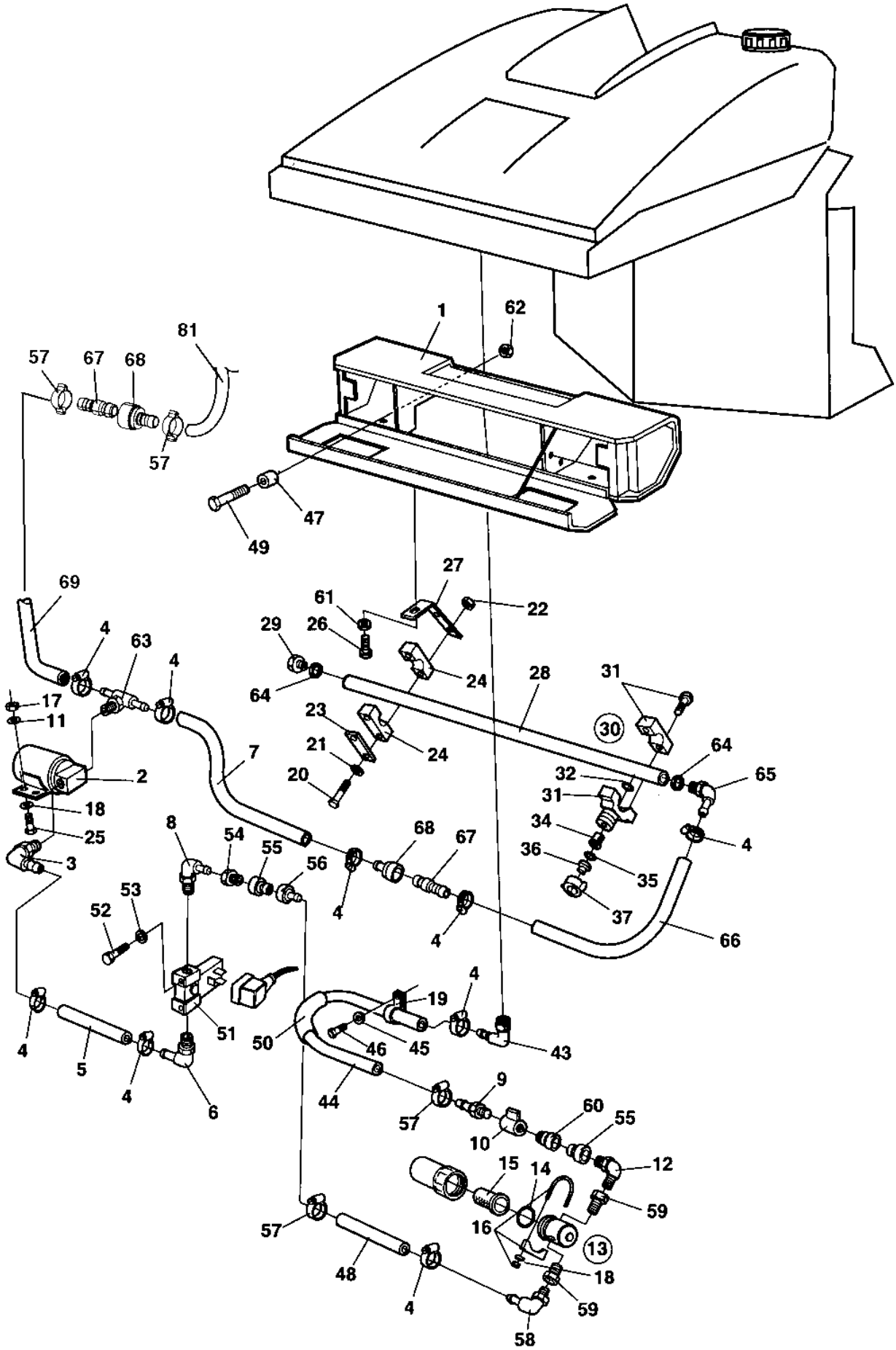

Sprinkler system, rear

Ref. No.	Part No.	Rem.	Qty	Description		Code
1	382425			Sprinkler box		
2	383697	3	1	Water pump		
3	923734		1	Hose connection		
4	313002		10	Hose clamp	13-20 mm	
5	904878	B	1XL	Hose reinforced		
6	901431		1	Hose connection		
7	904878	A	1XL	Hose reinforced		
8	791134		1	Elbow 90		
9	924544		1	Hose connection		
10	925599		1	Valve		
11	904556		4	Washer	8,4x16x3,0	
12	901298		1	Connector		
13	393272		1	Strainer cpl		
14	791959		1	.O-ring		
15	791949		1	.Filter element		B
16	313086		1	Clamp		
17	570005		10	Nut	M8	
18	904229		9	Washer		
19	921047		1	Clamp		
20	500016		4	Screw	M6-1,0x55 8,8	
21	904228		4	Washer		
22	586002		4	Lock nut	M6	
23	923859		2	Cover plate		
24	923876		2	Clamp		
25	500053		4	Screw	M8-1,25x20 8.8	
26	500051		2	Screw	M12-1,75x25 8,8	
27	384820		2	Bracket		
28	383129		1	Sprinkler pipe		
29	384775		1	Plug		
30	382586		4	Sprinkler, cpl		D
31	923680		1	.Nozzle clamp		D
32	923962		1	..O-ring		D
34	499444		1	.Strainer		D
35	904116		1	.Gasket		
36	903540		1	.Nozzle body	Green	D
37	923681		1	.Quick coupling, black		
38	923680		1	Nozzle clamp		D
39	923962		1	.O-ring		D
40	904116		1	Gasket		
41	929419		1	Coupling		
42	901431		1	Hose connection		
43	924996		1	Hose connection		D
44	904878	D	1XL	Hose reinforced		
45	904281		1	Washer	5,3x10x1	
46	500041		1	Screw		
47	359434		8	Spacer sleeve		
48	904878	E	1XL	Hose reinforced		
49	500031		8	Screw	M10-1,5x40 8,8	
50	901191	F	1XL	Protective hose		
51	287713		1	Solenoid valve		
52	500002		2	Screw	M4-0,7x12H 8.8	

3) New version with Cannon connection
A) L=0,52 m
B) L=0,20 m
D) L=0,65 m
E) L=0,53 m
F) L=0,60 m

Sprinkler system, rear

17666-1

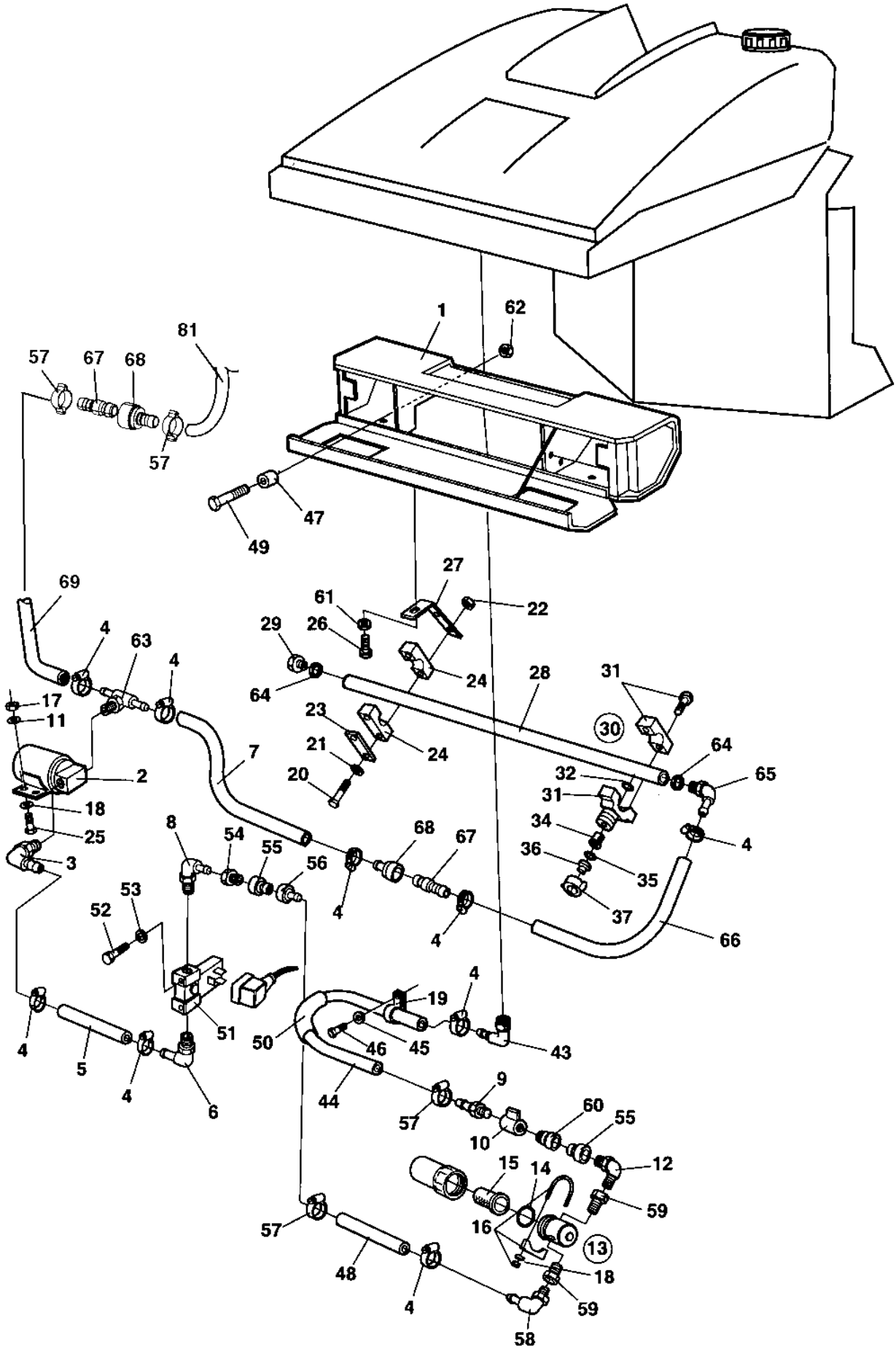

Sprinkler system, rear

Ref. No.	Part No.	Rem.	Qty	Description		Code
53	904698		2	Washer		
54	791135		1	Connector		
55	791128		2	Quick coupling		
56	791126		1	Quick coupling		
57	814071		4	Hose clamp		
58	924996		1	Hose connection		D
59	903886		2	Adapter		
60	791125		1	Quick coupling		
61	904703		2	Washer	13x24x4	
62	570006		2	Nut	M10	
63	903626		1	Connector		
64	903769		2	Sealing		
65	923684		1	Hose connection		
66	904878	C	1XL	Hose reinforced		
67	791127		1	Quick coupling		
68	791126		1	Quick coupling		
69	904878	I	1XL	Hose reinforced		
80		H	1	Sprinkling tank, rear		
81		H	1	Plastic hose		

C) L=0,50 m
H) See Sprinkler systems, tanks
I) L=0,30 m

Protective cover Combi wheels

15749

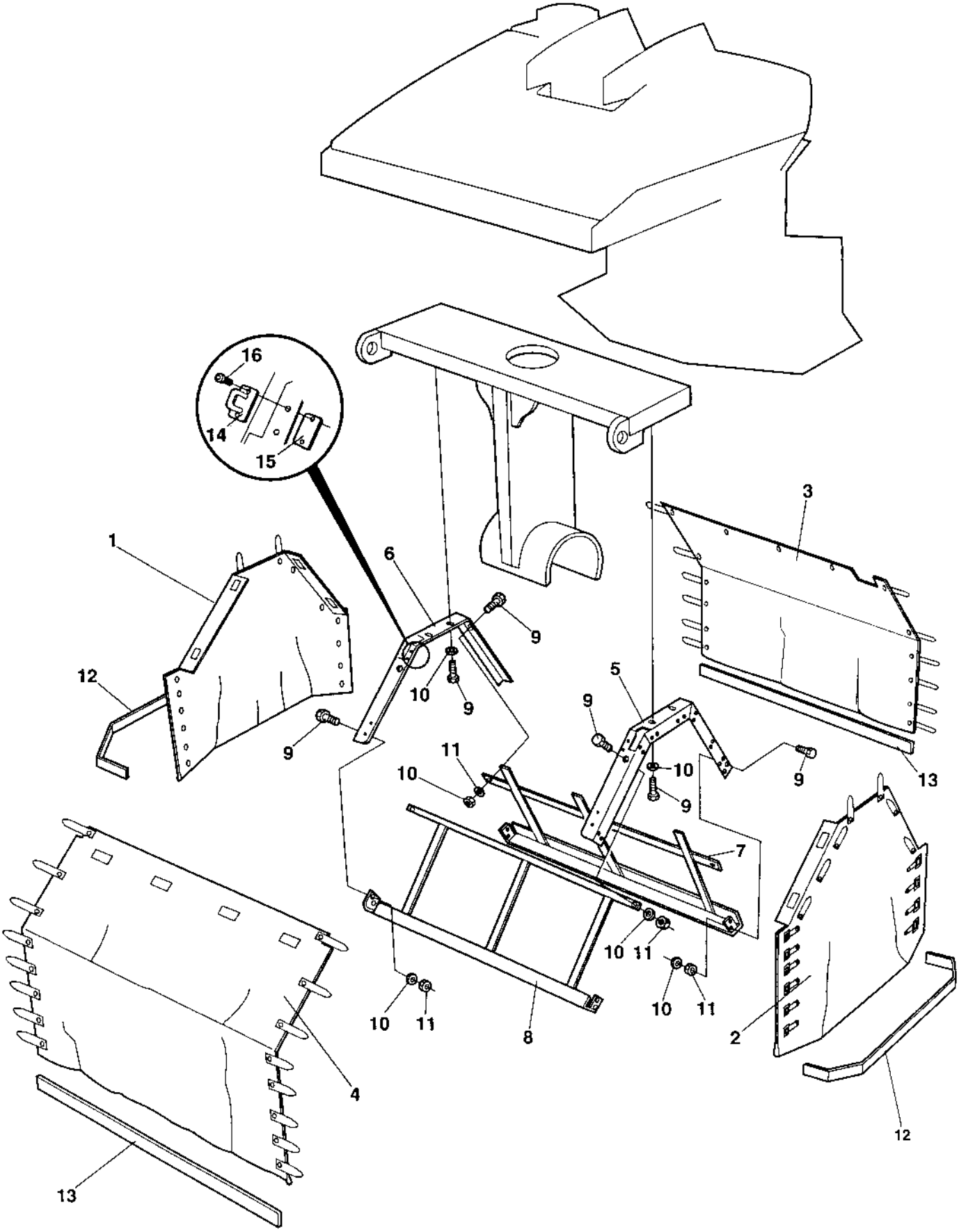

Protective cover Combi wheels

Ref. No.	Part No.	Rem.	Qty	Description		Code
1	371148	A	1	Protecting cover		
	381788	1,A	1	Protecting cover		
2	371149	B	1	Protecting cover		
	381789	1,B	1	Protecting cover		
3	371150	C	1	Protecting cover		
	381790	1,C	1	Protecting cover		
4	371151	D	1	Protecting cover		
	381791	1,D	1	Protecting cover		
5	371132	B	1	Bracket		
6	371136	A	1	Bracket		
7	371141	C	1	Bracket		
8	371145	D	1	Bracket		
9	500053		20	Screw	M8-1,25x20	8.8
10	600006		20	Washer		
11	586003		12	Lock nut	M8	
12	371736	E	2	Protective cover anchor		
13	371735	F	2	Protective cover anchor		
14	901634		25	Retainer		
15	372265		25	Bracket		
16	903658		50	Screw	M5x10	

1) 150 mm shorter, only interchangeable to the long version items 1 to 4 together.
A) Left
B) Right
C) Front
D) Rear
E) Right/left
F) Front/rear

Drum

Ref. No.	Part No.	Rem.	Qty	Description	Code
10			1	Drum (Page 70)	
20				Wheels, rear (Page 72)	

Drum

18465

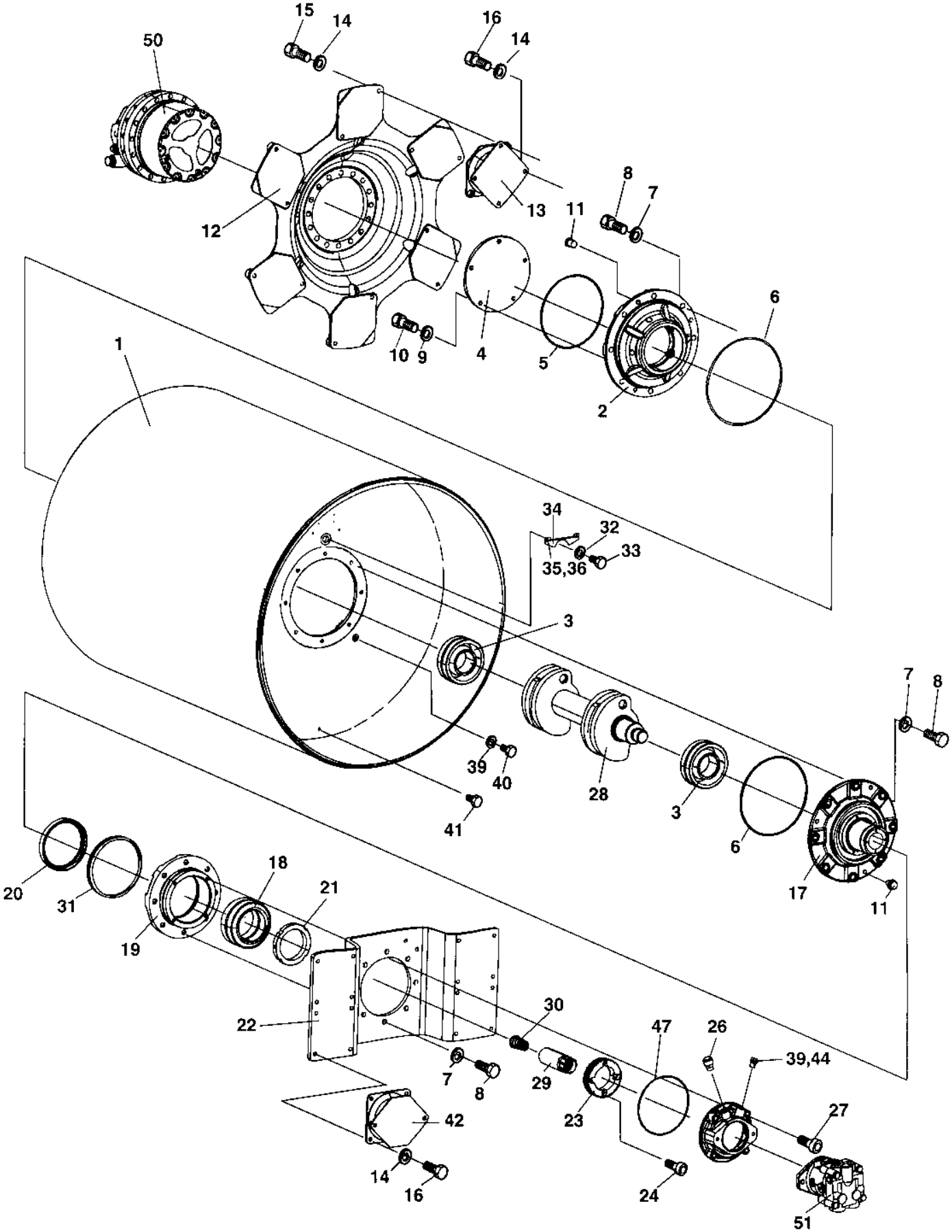
15
14
16
14
50
8
7
13
11
12
6
1
10
9
4
5
2
34
32
33
35,36
3
7
8
39
40
28
3
41
6
17
11
18
20
21
31
19
30
22
47
26
39,44
7
8
29
23
27
42
14
16
24
51

Drum

Ref. No.	Part No.	Rem.	Qty	Description		Code
1	392114		1	Drum		
2	391280		1	Bearing housing		
3	114060		2	Spherical roller bearing		D
4	391029		1	Cover		
5	160045		1	O-ring 70		
6	160344		2	O-ring 70		D
7	904232		24	Washer	17x30x3	
8	500076		24	Screw	M16x55	
9	904230		5	Washer	10,5X22X2	
10	500028		5	Screw	M10-1,5x25 8,8	
11	900775		6	Plug		
12	391286		1	Drive disc		
13	394250		6	Shock absorber		B
14	904231		57	Washer	13x24x2	
15	925519		12	Screw		
16	500051		40	Screw	M12-1,75x25 8,8	
17	391277		1	Bearing housing		
18	116041		1	Taper roller bearing		D
19	343318		1	Bearing housing		D
20	386272		1	Sealing		D
21	390897		1	Shaft nut		
22	392405		1	Holder plate		
23	391292	1	1	Gear wheel		
24	508048	1	4	Screw	M08x030H 8.8	
25	390160		1	Motor adapter		
26	926736		1	Breather	M14	B
27	500049		4	Screw	M12-1,75x60 8.8	
28	392120		1	Eccentric shaft		
29	381027		1	Splined sleeve		
30	349715		1	Spring		
31	929447		1	V-ring		D
32	162017		1	Seal ring	M30	D
33	343744		1	Magnetic plug	M30	D
34	359955		1	Drop plate		
35	904229		2	Washer		
36	500019		2	Screw		
37	343801		1	Sign plate		
38	527002		4	Drive screw		
39	162027		2	Sealing	M12	D
40	344196		1	Plug	M12	D
41	500163		1	Screw	M12x16	
42	394251		4	Shock absorber		
44	903726		1	Steel plug threaded		
47	160105		1	O-ring 70		D
50			1	Drum gear		D
51			1	Vibration motor		D

1) Only on front drum.

Wheels, rear

15673-2

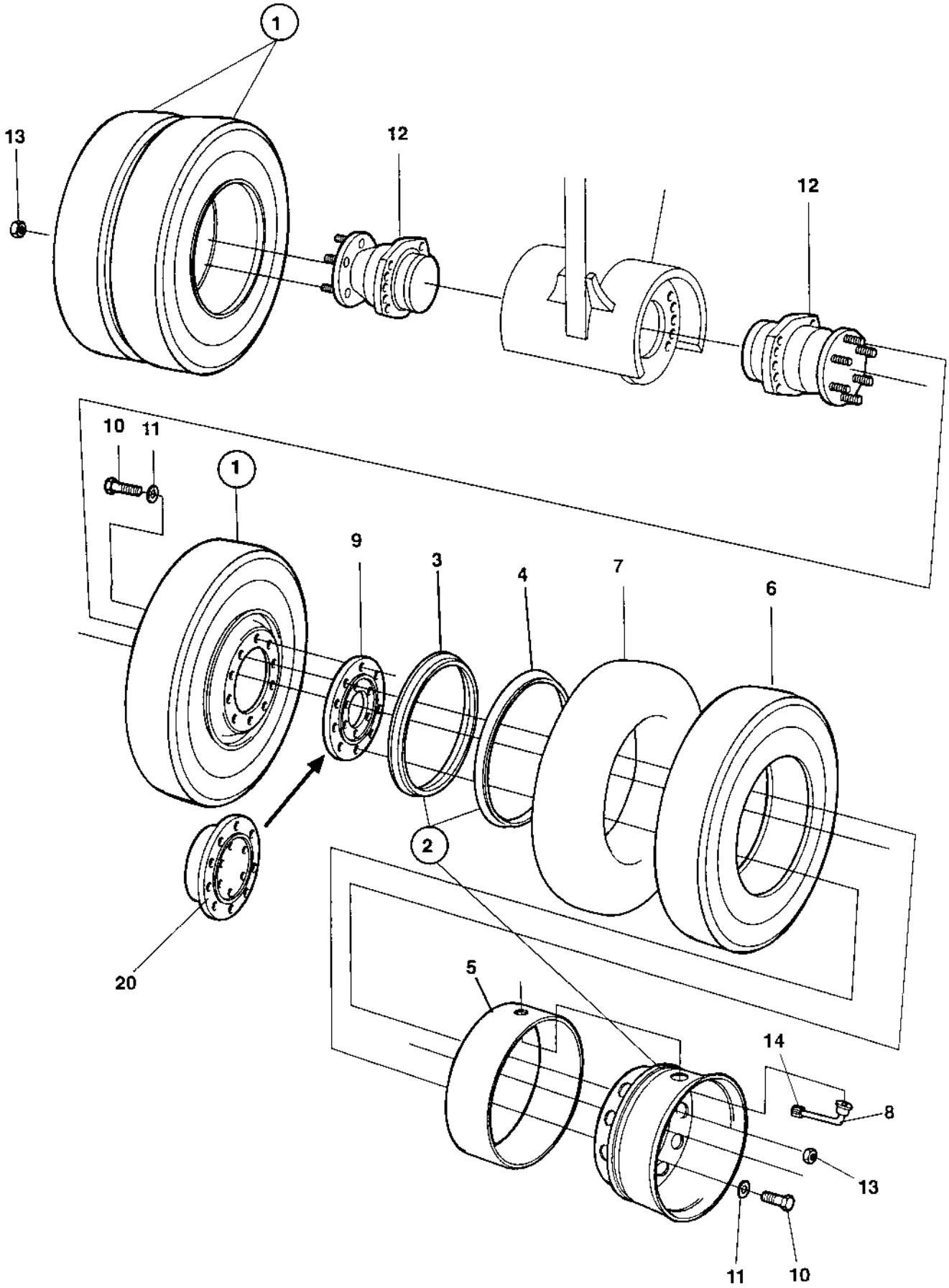

Wheels, rear

Ref. No.	Part No.	Rem.	Qty	Description		Code
1	383827		4	Wheel		
2	901329		1	.Rim cpl		
3	901636		1	..Lock ring		
4	901637		1	..Side ring		
5	901331		1	.Rim liner		D
6	904763		1	.Tyre, smooth	Bridgestone	B
7	901333		1	.Tyre tube		D
8	901335		1	.Valve		B
9				Not used on this model		B
10	500206		20	Screw	M20-2,5X60 8.8	
11	902252		20	Washer		
12			2	Hydraulic motor		
13			12	Nut		
14	791152		2	Tyre inflate extender		
20	379109		2	Spacer		

Engine

Ref. No.	Part No.	Rem.	Qty	Description		Code
10				Diesel engine Up to 61812399 (Page 76)	Deutz BF04L 2011	
				Diesel engine From 61812400 (Page 78)	Deutz TD2011 L04 I	
20				Intake system (Page 80)		
30				Fuel system (Page 82)		
40				Exhaust system (Page 84)		

Diesel engine Deutz BF04L 2011

17153

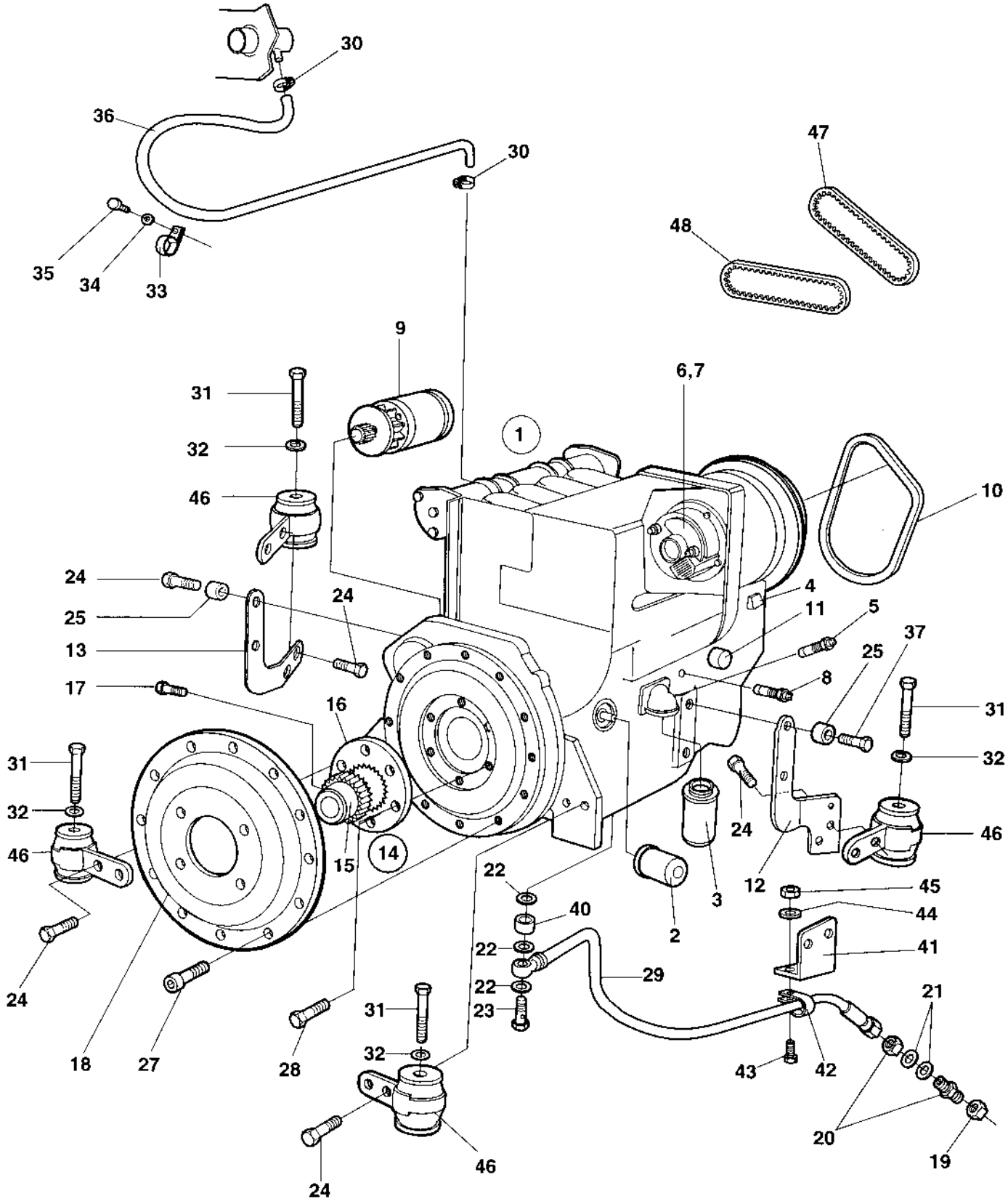

Diesel engine Deutz BF04L 2011

Ref. No.	Part No.	Rem.	Qty	Description		Code
1	388502		1	Diesel engine		
	395293	I	1	Diesel engine		
	395291	I	1	Diesel engine	CE	
	395292	I	1	Diesel engine	USA	
2	939515		1	.Oil filter		A
3	903938		1	.Fuel filter		A
4	909369		1	.Solenoid		D
5	908295		1	.Oil temp guard		D
6	939837		1	.Alternator		C
7	939478		1	..Charging regulator		D
	940222		1	..Charging regulator	13.8V	
8	939838		1	.Oil pressure switch		D
9	940980		1	.Starter		
10	939839		1	.V-belt		A
11	936147	A	1	.Strainer		A
12	382351	B	1	Engine bracket		
13	372869	C	1	Engine bracket		
14	359402		1	Coupling, cpl		
15			1	.Hub		
16	902843		1	.Flange		D
17	508095		1	.Screw		
18	359403		1	Pump bracket		
19	330383		1	Cap hydraulic		
20	230515		1	Connector		
21	904233		2	Washer	21x36x3	
22	330331		3	Washer	18,2x23,9x1,5	
23	747691		1	Hollow screw		
24	500274		10	Screw		
25	357275		4	Steel tube part		
27	508096		9	Screw	M10-1,5x25H 8,8	
28	500021		6	Screw	M8-1,25x25 8.8	
29	372791	D	1	Hydraulic hose		
30	313002		2	Hose clamp	13-20 mm	
31	500122		4	Screw		
32	904231		4	Washer	13x24x2	
33	921132		1	Clamp		
34	904229		1	Washer		
35	500019		1	Screw		
36	791969		1	Hose		
37	500050		2	Screw		
40	372588		1	Spacer		
41	372792		1	Bracket		
42	921063		1	Clamp		
43	500040		1	Screw	M6-1x20 8,8	
44	570004		1	Nut	M6	
45	904228		1	Washer		
46	903320	G	4	Shock absorber		D
47	939840	G,H	1	Toothed belt kit		B
48	939976	G	1	Toothed belt		

A) Fuel lift pump
B) Front
C) Rear
D) Engine oil drain
G) Included in item 1
H) Belt and roller
I) Exemption engine.

Diesel engine Deutz TD2011 L04 I

17153

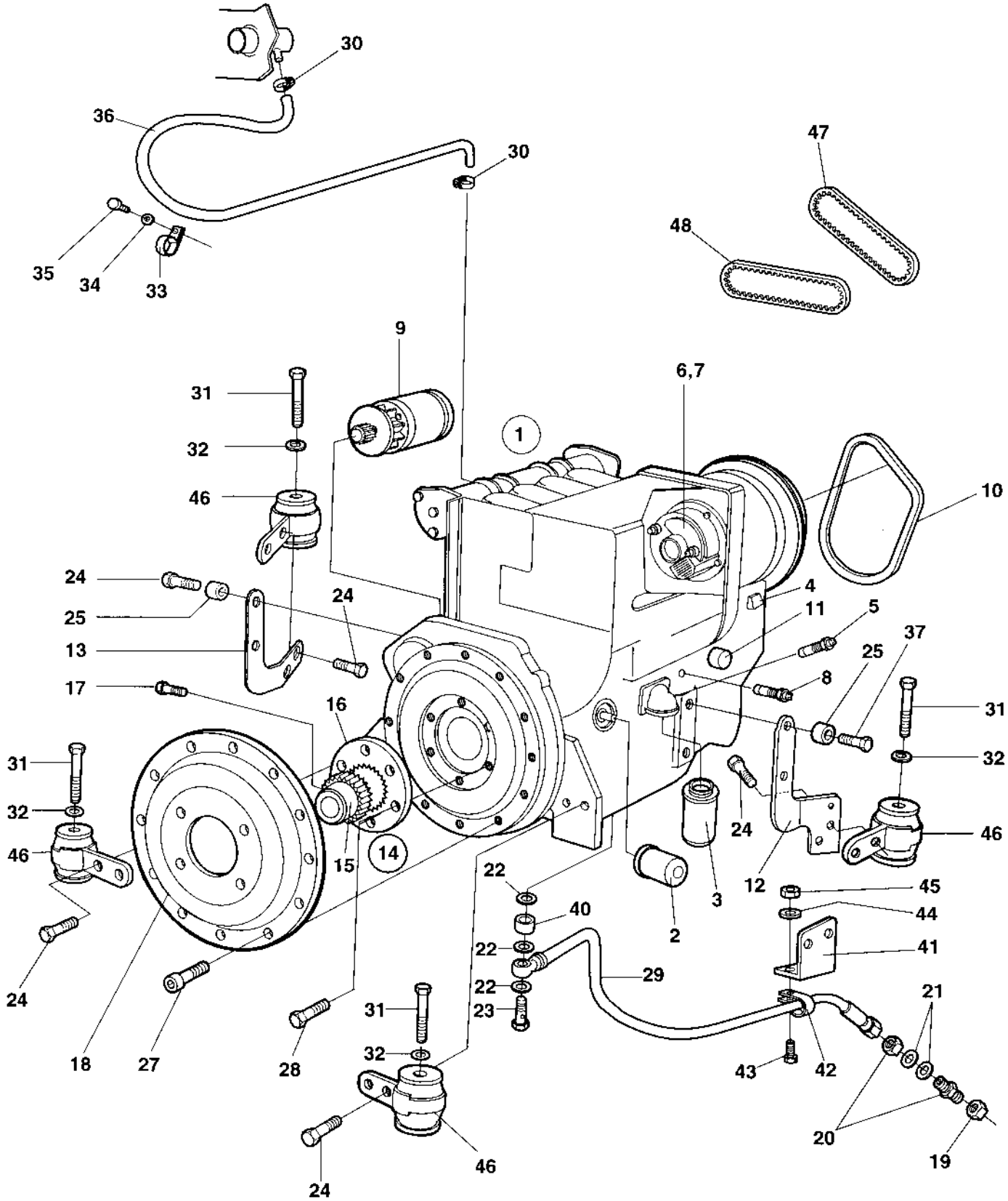

Diesel engine Deutz TD2011 L04 I

Ref. No.	Part No.	Rem.	Qty	Description		Code
1	395504		1	Diesel engine		
2	939515		1	.Oil filter		A
3	903938		1	.Fuel filter		A
4	909369		1	.Solenoid		D
5	908295		1	.Oil temp guard		D
6	939837		1	.Alternator		C
7	939478		1	..Charging regulator		D
	940222		1	..Charging regulator	13.8V	
8	939838		1	.Oil pressure switch		D
9	940980		1	.Starter		
10	939839		1	.V-belt		A
11	936147	A	1	.Strainer		A
12	382351	B	1	Engine bracket		
13	372869	C	1	Engine bracket		
14	359402		1	Coupling, cpl		
15			1	.Hub		
16	902843		1	.Flange		D
17	508095		1	.Screw		
18	359403		1	Pump bracket		
19	330383		1	Cap hydraulic		
20	230515		1	Connector		
21	904233		2	Washer	21x36x3	
22	330331		3	Washer	18,2x23,9x1,5	
23	747691		1	Hollow screw		
24	500274		10	Screw		
25	357275		4	Steel tube part		
27	508096		9	Screw	M10-1,5x25H 8,8	
28	500021		6	Screw	M8-1,25x25 8.8	
29	372791	D	1	Hydraulic hose		
30	313002		2	Hose clamp	13-20 mm	
31	500122		4	Screw		
32	904231		4	Washer	13x24x2	
33	921132		1	Clamp		
34	904229		1	Washer		
35	500019		1	Screw		
36	791969		1	Hose		
37	500050		2	Screw		
40	372588		1	Spacer		
41	372792		1	Bracket		
42	921063		1	Clamp		
43	500040		1	Screw	M6-1x20 8,8	
44	570004		1	Nut	M6	
45	904228		1	Washer		
46	903320	G	4	Shock absorber		D
47	939840	G,H	1	Toothed belt kit		B
48	939976	G	1	Toothed belt		

A) Fuel lift pump
B) Front
C) Rear
D) Engine oil drain
G) Included in item 1
H) Belt and roller

Intake system

17154

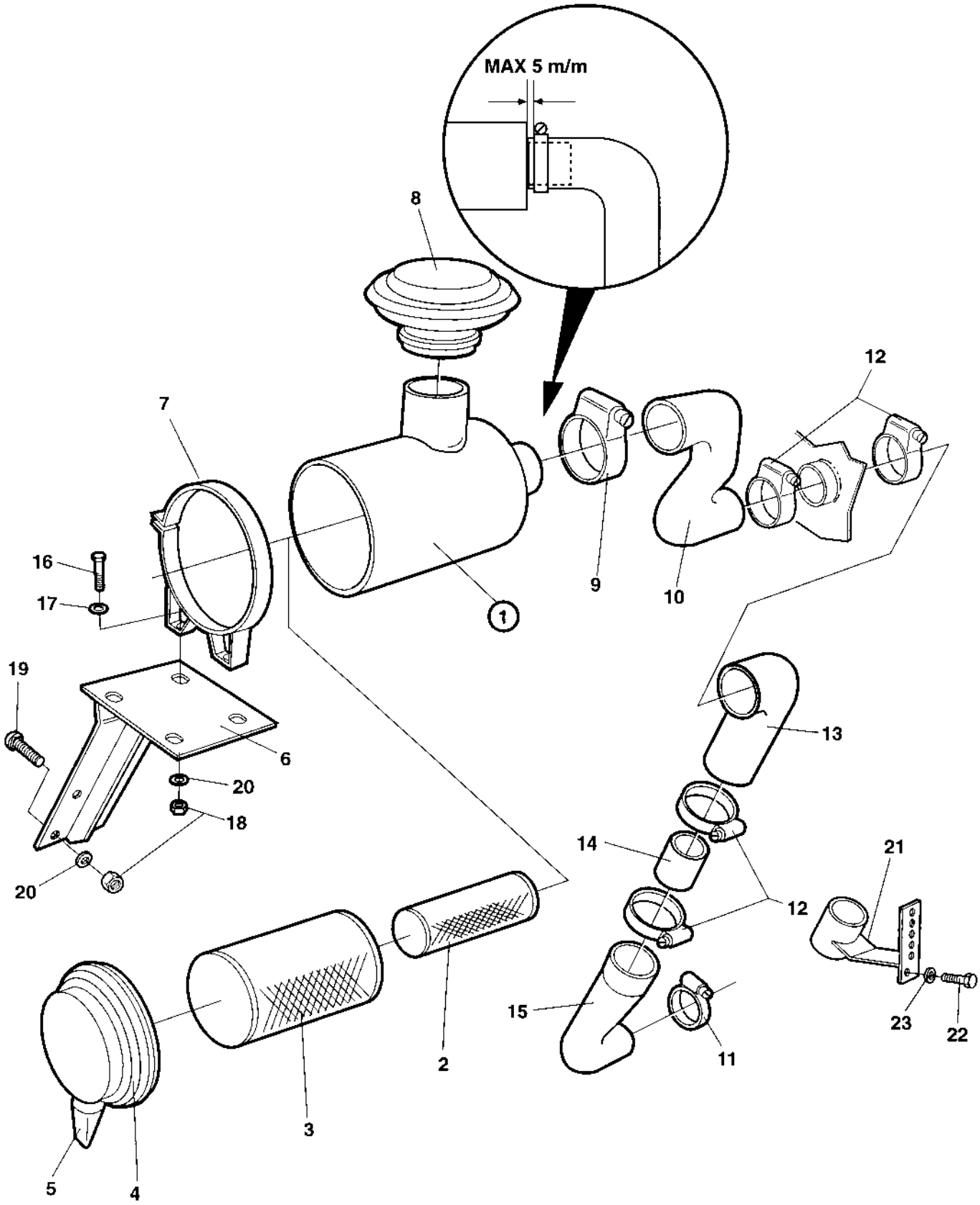

Intake system

Ref. No.	Part No.	Rem.	Qty	Description		Code
1	370878		1	Air cleaner, cpl		
2	908401		1	.Safety filter		A
3	908400		1	.Main filter		A
4	908452		1	.Cover		
5	908399		1	.Vacuator valve		D
6	373890		1	Bracket		
7	813791		2	Mounting band		
8	499266		1	Protection cover		
9	904060		1	Hose clamp		
10	373523		1	Hose		
11	904104		1	Clamp		
12	904059		4	Hose clamp		
13	394009		1	Rubber hose		
14				Not used on this model		
15	359502		1	Rubber hose		
16	500029		4	Screw	M10-1,5x30 8.8	
17	904637		4	Washer	10x18x2	
18	586018		8	Lock nut	M10	
19	903744		4	Carriage screw		
20	904557		8	Washer	10,5x22x4	
21	382118		1	Hose holder		
22	500053		1	Screw	M8-1,25x20 8.8	
23	904556		1	Washer	8,4x16x3,0	

Fuel system

18245

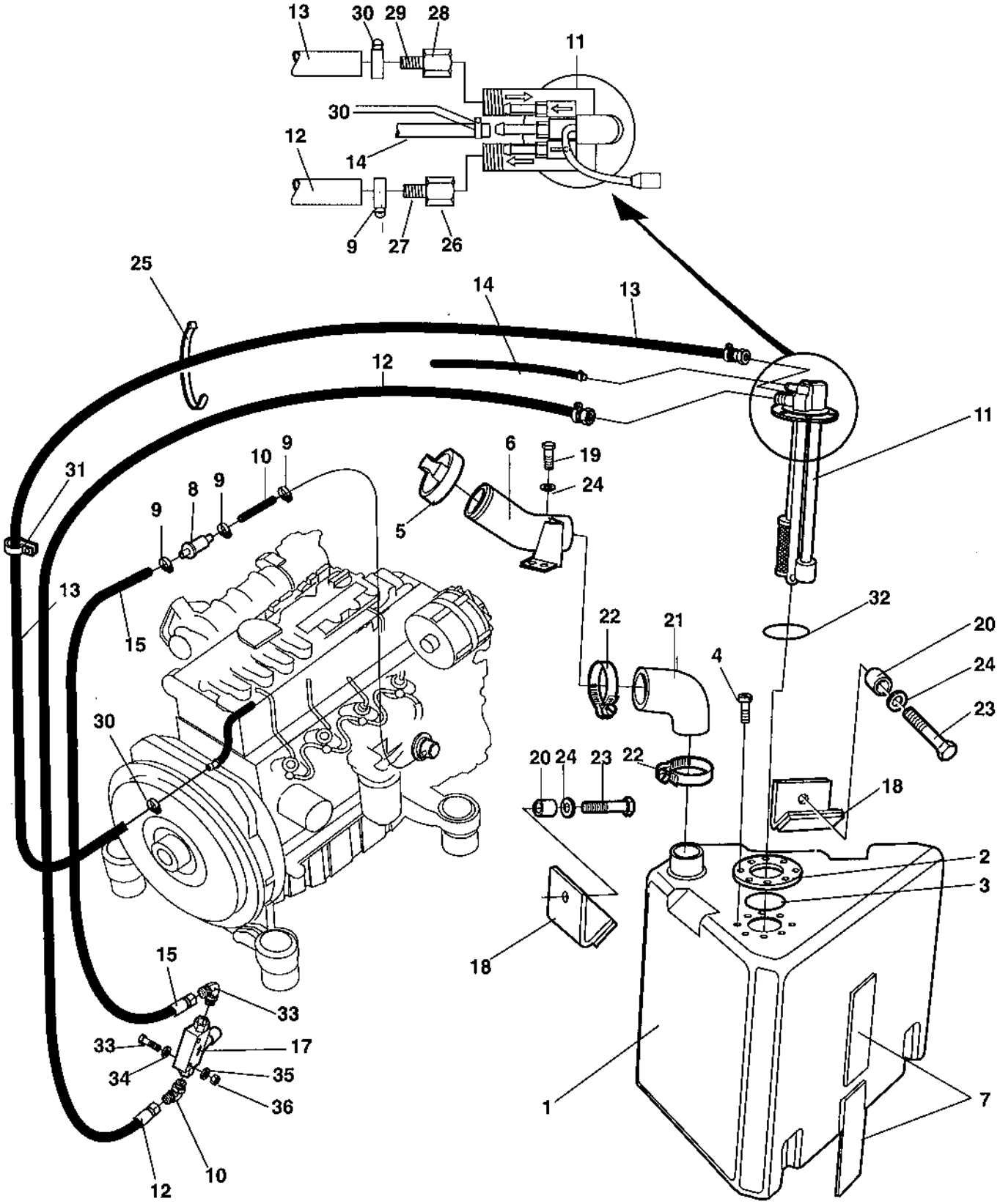

Fuel system

Ref. No.	Part No.	Rem.	Qty	Description		Code
1	359522		1	Fuel tank		
2	380447		1	Flange	2 mm	
3	160058		1	O-ring		D
4	792274		8	Screw	M6x14	
5	373304		1	Cap		D
	902866		1	.Key	Marked "455"	D
6	373302		1	Filling pipe		
7	357459		11	Rubber cloth		
8	929322		1	Fuel strainer		A
9	313001		5	Hose clamp		
10	904985	E	1XL	Fuel hose		D
11	386058		1	Level sender		D
12	377699	2	1	Fuel hose		D
	904985	3,F	1XL	Fuel hose		D
13	904984	G	1XL	Fuel hose		D
14	371254	H	1	Plastic hose		
15	377673	2	1	Fuel hose		
16	791431	2	2	Elbow 90, O-ring		
17	940259	1,2	1	Fuel supply pump		
18	359618		2	Holder		
19	500048		2	Screw	M10-1,5x20 8.8	
20	359434		2	Spacer sleeve		
21	359390		1	Rubber hose		
22	313038		2	Hose clamp		
23	500030		2	Screw	M10-1,5x35H 8,8	
24	904230		4	Washer	10,5X22X2	
25	925802		N	Cable ties	L=142 mm	
26	903685		1	Hose connection socket		
27	903683		1	Hose connection		
28	903684		1	Hose connection socket		
29	904211		1	Hose connection		
30	313075		1	Hose clamp		
31	921080		1	Clamp		
32	904707		1	O-ring		D
33	500016	2	2	Screw	M6-1,0x55 8,8	
34	904228	2	4	Washer		
35	904735	2	2	Washer		
36	586002	2	2	Lock nut	M6	

1) Now delivered with engine.
2) Included in modification kit PN 377717.
3) Used when no Fuel supply pump is used.
E) L=0,05 m
F) L=1,55 m, suction
G) L=1,55 m, return
H) L=450 mm, breather

Exhaust system

15666-3

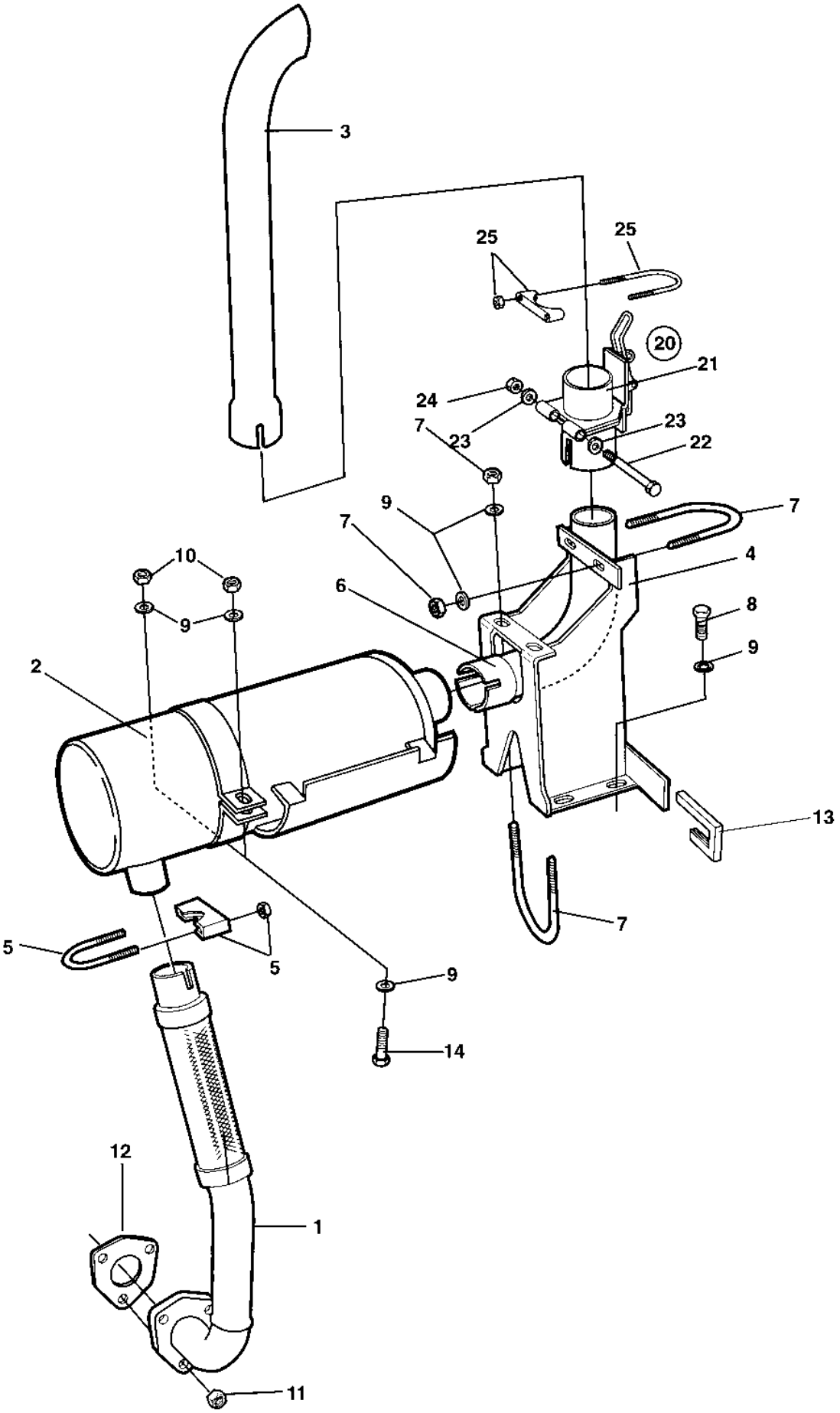

Exhaust system

Ref. No.	Part No.	Rem.	Qty	Description		Code
1	359497		1	Exhaust pipe		D
2	370765		1	Muffler		D
3	370491		1	Exhaust pipe		
4	359490		1	Bracket		
5	313036		1	Clamp		D
6	370618		1	Exhaust pipe		D
7	313094		2	Pipe clamp		
8	500053		4	Screw	M8-1,25x20 8.8	
9	904556		12	Washer	8,4x16x3,0	
10	586003		2	Lock nut	M8	
11	570005		3	Nut	M8	
12	359500		1	Gasket		D
13	902166	A	1XL	Edge trim	3-5	
14	500022		2	Screw	M8-1,25x30 8,8	
20	373694	B	1	Hinged exhaust pipe, cpl		
21			1	.Hinged exhaust pipe		
22	500267		1	.Screw	M12x120 8,8 FZB	
23	904231		2	.Washer	13x24x2	
24	586019		1	.Lock nut	M12	
25	313094		1	Pipe clamp		

A) L=750 mm
B) Option

Hydraulic system

Ref. No.	Part No.	Rem.	Qty	Description		Code
210				Propulsion system (Page 88)	Pump	
215				Propulsion system (Page 90)	Motors	
410				Vibration system (Page 92)	Pump	
415				Vibration system (Page 94)	Motor	
500	374494		1	Oil cooler cpl (Page 96)		C
600				Steering system Up to 61812399 (Page 98)		
				Steering system From 61812400 (Page 102)		
620	359139		1	Pilot valve (Page 106)		C
670				Offset drum (Page 108)	Option	
672	380780		1	Direction control valve (Page 110)		
675	373403		1	Cylinder (Page 112)	Offset drum	C
810				Brake system (Page 114)		

Propulsion system Pump

17389

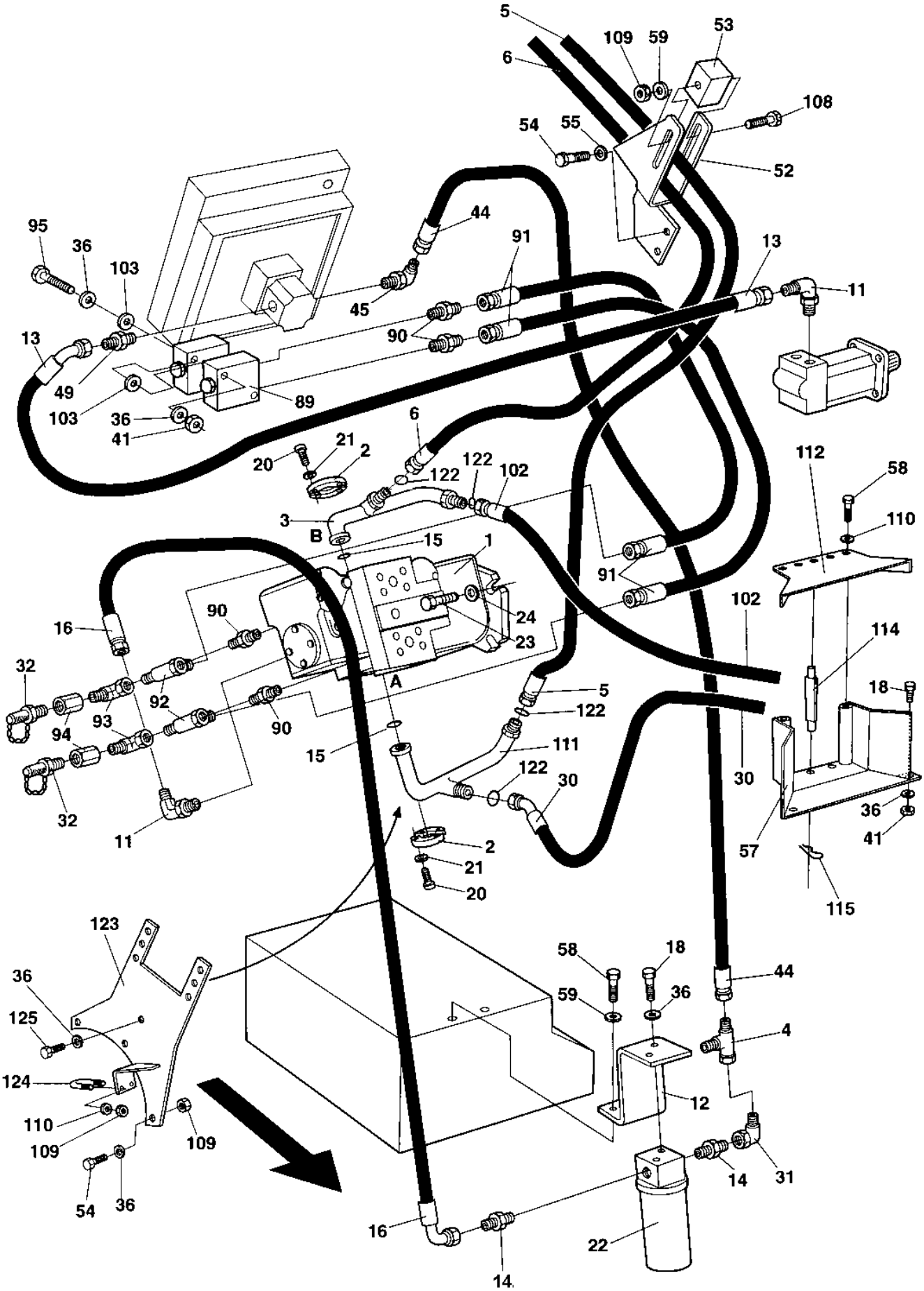

Propulsion system Pump

Ref. No.	Part No.	Rem.	Qty	Description		Code
1	393336		1	Hydraulic pump		C
2	929226		4	Flange half		
3	382113		1	Connector		
4	234243		1	T-connector		
5	483326		1	Hydraulic hose		
6	382160		1	Hydraulic hose		
11	334604		2	Elbow 90, O-ring		
12	359557		1	Holder plate		
13	483124		1	Hydraulic hose		
14	334468		2	Adapter		
15	904004		2	O-ring		D
16	483071		1	Hydraulic hose		
18	500028		4	Screw	M10-1,5x25 8,8	
20	502037		8	Screw	3/8"-16UNCx1.1/2" 8.8	
21	904637		8	Washer	10x18x2	
22			1	Hydraulic oil filter		
	359551		1	.Filter head		
	372229	A	1	.Hydraulic oil filter element		A
	359552	B	0	Cleaning filter element	Maximum 50 hours use	
23	500194		4	Screw	M12x40H 8.8	
24	904213		4	Washer	13x30x4	
30	484082		1	Hydraulic hose		D
31	334155		1	Elbow 90		
32	923405		2	Measuring nipple		D
36	904230		12	Washer	10,5X22X2	
41	570006		4	Nut	M10	
44	482955		1	Hydraulic hose		
45	334237		1	Adapter		
49	904110		1	Connector		
52	382232		1	Hose clamp		
53	372912		1	Hose clamp		
54	500029		5	Screw	M10-1,5x30 8.8	
55	904557		2	Washer	10,5x22x4	
57	374163		1	Hose clamp		
58	500021		4	Screw	M8-1,25x25 8.8	
59	904640		3	Washer	8,4x22x3	
89	393338		1	Flushing valve		
90	791409		4	Straight connector orfs		
91	483905		2	Hydraulic hose		
92	791414		2	T-connection, O-ring with swivel		
93	791401		2	Elbow 90, O-ring with swivel		
94	791847		2	Straight connector		
95	500077		2	Screw		
102	484073		1	Hydraulic hose		D
103	904557		4	Washer	10,5x22x4	
108	903989		1	Bolt		
109	570005		3	Nut	M8	
110	904229		4	Washer		
111	375272		1	Connector		
112	374165		1	Cover		
114	374200		3	Spacer		
115	924585		3	Cotter pin		
122	904010		4	O-ring		
123	382057		1	Bracket		
124	904845		1	U-bolt		
125	500091		1	Screw	M10-1,5x50 8,8	

A) Replacement
B) Cleaning

Propulsion system Motors

18497

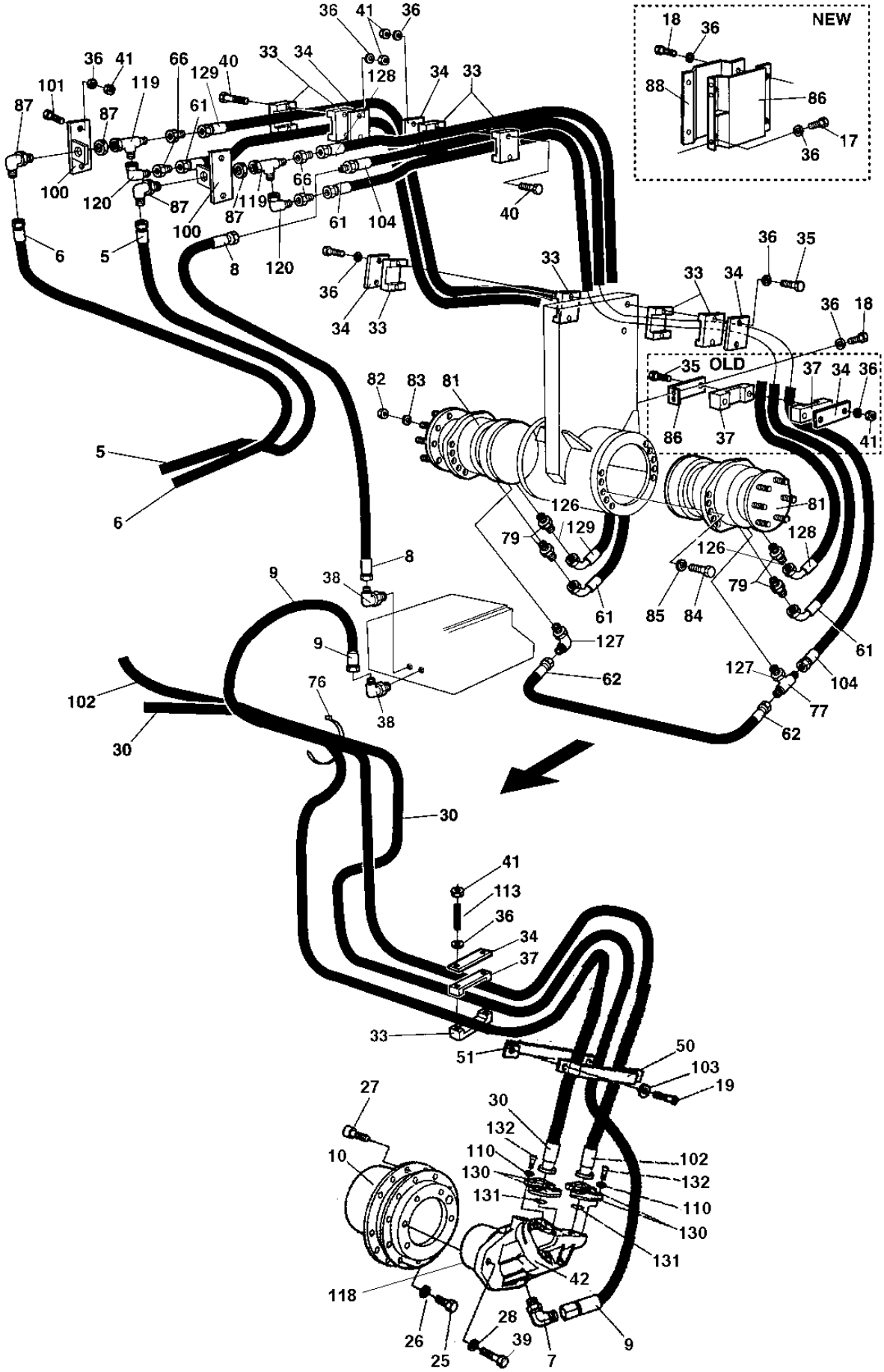

Propulsion system Motors

Ref. No.	Part No.	Rem.	Qty	Description		Code
5		2	1	Hydraulic hose		
6		2	1	Hydraulic hose		
7	928908		1	Adapter		
8	483073		1	Hydraulic hose		D
9	484086		1	Hydraulic hose		D
10	391329		1	Gear box		
17	500027		3	Screw	M10-1,55x22 8.8	
18	500028		4	Screw	M10-1,5x25 8,8	
19	513014		2	Screw	M10-1,5x30 10.9	
25	928371		12	Screw		
26	904214		12	Washer	15x30x4	
27	928022		16	Screw		
28	383023		2	Spacer sleeve		
30		2	1	Hydraulic hose		
33	343872		9	Hose clamp		D
34	335914		5	Cover plate		
35	500192		4	Screw	M10x80	
36	904230		21	Washer	10,5X22X2	
37	343732		2	Hose clamp		
38	801198		2	Elbow 90		
39	500056		2	Screw	M12x45 8,8	
40	903524		4	Bolt		
41	570006		10	Nut	M10	
42	391330		1	Hydraulic motor		
50	383462		1	Hose clamp		
51	383461		1	Hose clamp		
61	483952		2	Hydraulic hose		D
62	482167		1	Hydraulic hose		
66	904585		4	Reducer		
76	313102		N	Cable ties		
77	334135		1	Tee-connector		
79	904578		4	Connector		
81	379006		2	Hydraulic motor		C
82	929236		12	Nut		
83	903290		12	Washer	21x36x6	
84	500070		20	Screw	M16x50	
85	904232		20	Washer	17x30x3	
86	381711		1	Bracket		
87	904787	B	2	Connector		
88	381736		1	Hose clamp		
100	370620		2	Hose clamp		
101	903715		4	Screw		
102		2	1	Hydraulic hose		
103	904557		2	Washer	10,5x22x4	
104	392616		1	Hydraulic hose		D
110	904229		8	Washer		
113	904056		2	Stud		
118	792387		1	O-ring		D
119	904496		2	Connector		
120	904584		2	Elbow connector 90		
126	904781		2	Adapter		
127	334121		2	Straight connector		
128	483953		1	Hydraulic hose		
129	483328		1	Hydraulic hose		
130	900430		4	Flange half		
131	904003		2	O-ring		
132	900777		8	Screw		

2) See section " Propulsion system, pump "
B) Bulkhead

Vibration system Pump

18495

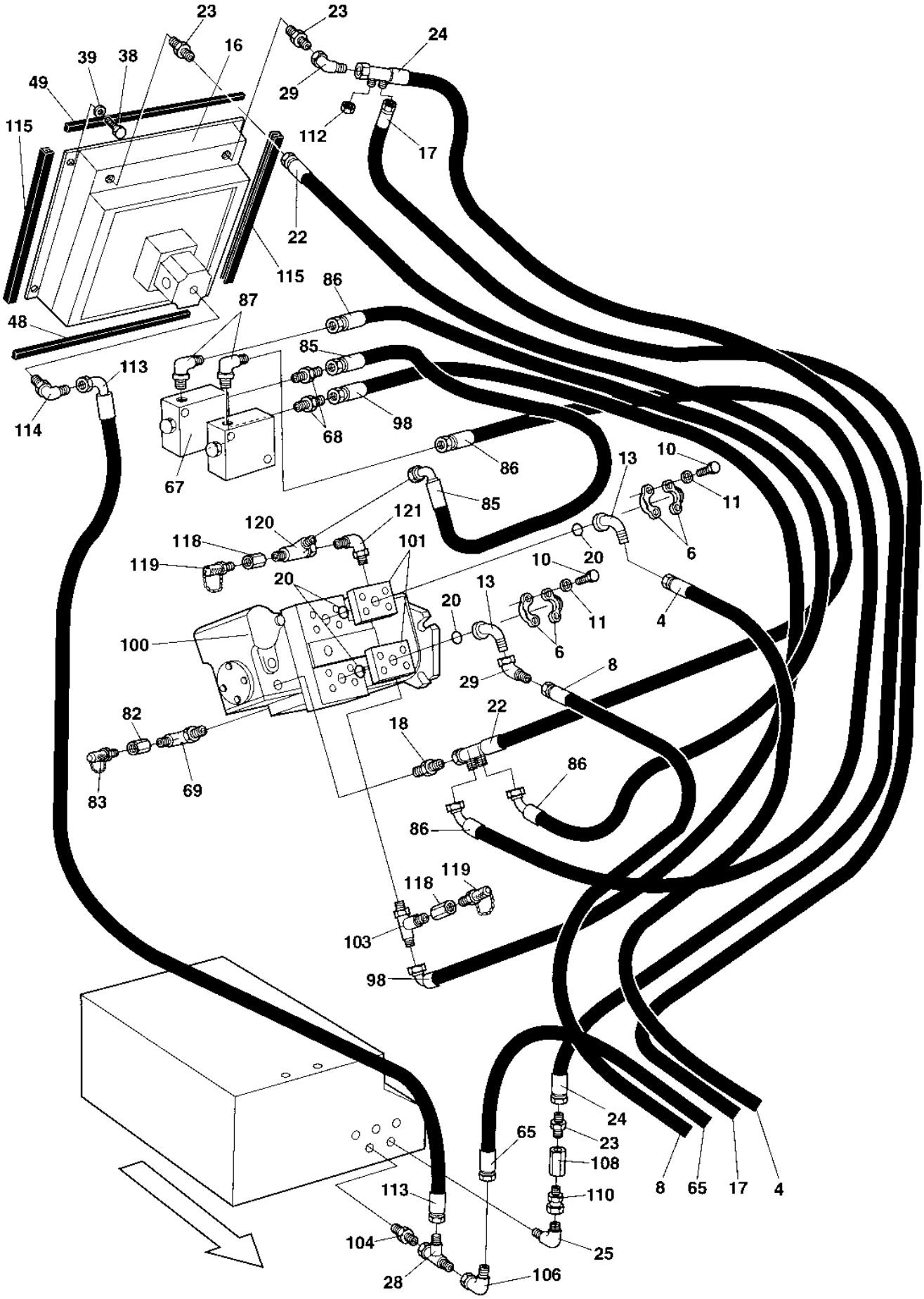

Vibration system Pump

Ref. No.	Part No.	Rem.	Qty	Description		Code
4	483057		1	Hydraulic hose		D
6	929226		4	Flange half		
8	483054		1	Hydraulic hose		D
10	502042		8	Screw		
11	904637		8	Washer	10x18x2	
13	903553		2	Connector		
16	374494		1	Oil cooler cpl (Page 96)		C
17	483410		1	Hydraulic hose		D
18	334138		1	Adapter		
20	904004		4	O-ring		D
22	375283		1	Hydraulic hose		
23	334156		3	Adapter		
24	375284		1	Hydraulic hose		
25	334128		1	Elbow 90G		
28	334234		1	Tee-connector		
29	334248		2	Elbow 45, O-ring		
38	500021		2	Screw	M8-1,25x25 8.8	
39	904556		4	Washer	8,4x16x3,0	
48	902379	A	1XL	Edge trim		
49	297018	A	1XL	Rubber strip		
65	483144		1	Hydraulic hose		D
67	393338		1	Flushing valve		
68	791409		2	Straight connector orfs		
69	334389		1	Connector		
82	433830401		1	Connector		
83	910161		1	Measuring nipple		D
85	483800		1	Hydraulic hose		
86	482892		2	Hydraulic hose		
87	334445		2	Connector		
98	483802		1	Hydraulic hose		
100		C	1	Hydraulic pump		
101	375285		2	Connection block		
103	791746		1	Tee-connector		
104	234349		1	Connector		
106	334524		1	Connector		
108	903774		1	Check valve		
110	330438		1	Straight connector		
112	230400		1	Cap		D
113	483409		1	Hydraulic hose		
114	334563		1	Adapter		
115	904726	B	2XL	Rubber strip		
118	791847		2	Straight connector		
119	923405		2	Measuring nipple		D
120	791414		1	T-connection, O-ring with swivel		
121	791846		1	Elbow 90, O-ring with swivel		

A) L=0.385 m
B) L=0.35 m
C) Incl. in propulsion pump

Vibration system Motor

15869

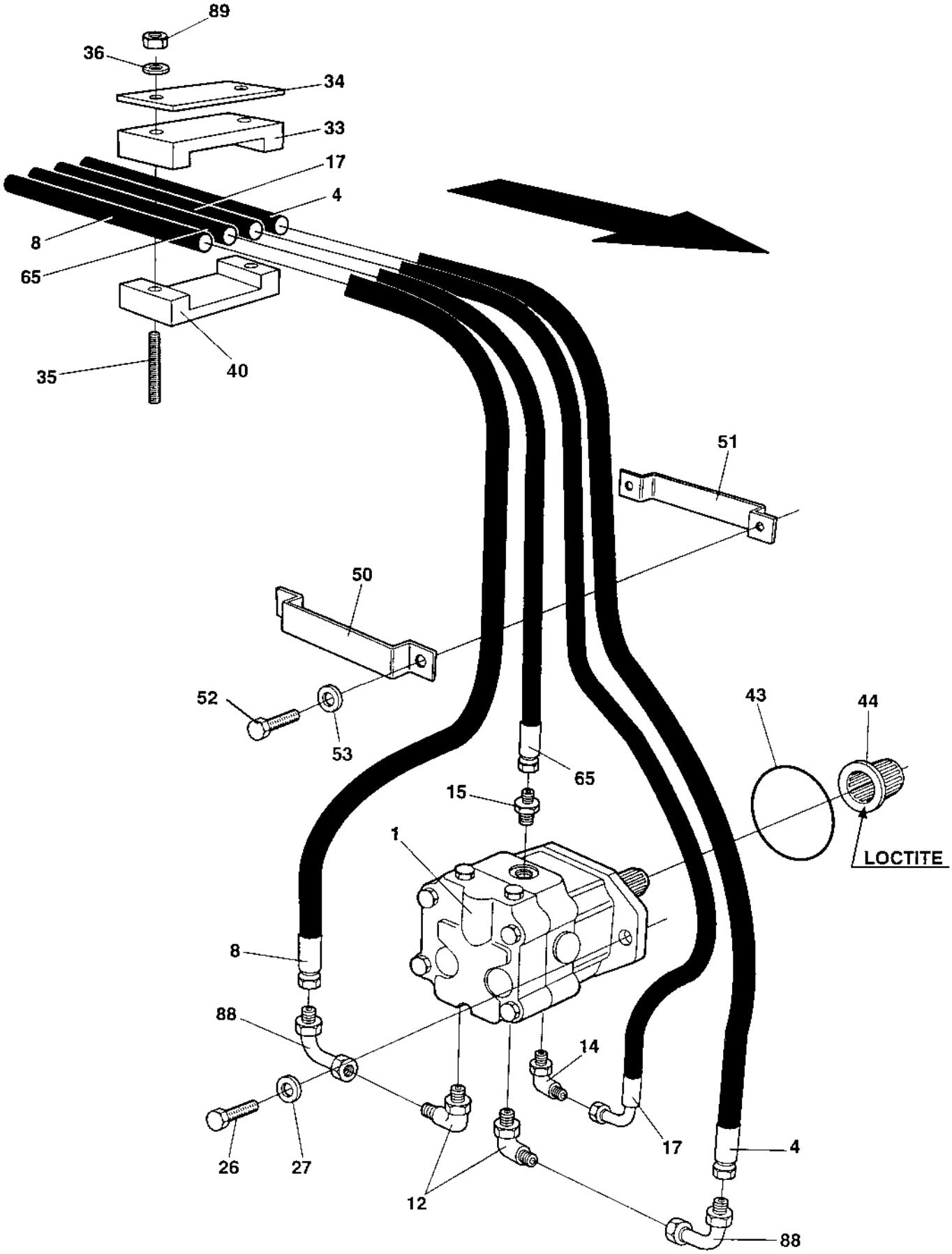

Vibration system Motor

Ref. No.	Part No.	Rem.	Qty	Description		Code
1	391331		1	Hydraulic motor, Cpl		C
4		1	1	Hydraulic hose		C
8		1	1	Hydraulic hose		C
12	334118		2	Elbow 90 with O-ring		
14	813444		1	Elbow 90, O-ring		
15	334121		1	Straight connector		
17		1	1	Hydraulic hose		
26	500046		2	Screw	M12x30H 8,8 FZB	
27	904213		2	Washer	13x30x4	
33	343872		2	Hose clamp		D
34	335914		2	Cover plate		
35	904056		4	Stud		
36	904230		4	Washer	10,5X22X2	
40	343872		2	Hose clamp		D
43	160279		1	O-ring		D
44	340862		1	Splined sleeve		
50	383460		1	Hose clamp		
51	383462		1	Hose clamp		
52	500030		2	Screw	M10-1,5x35H 8,8	
53	904557		2	Washer	10,5x22x4	
65		1	1	Hydraulic hose		
88	372682		2	Connector		
89	570006		4	Nut	M10	

1) See section " Vibration system, pump "

374494 Oil cooler cpl

16055

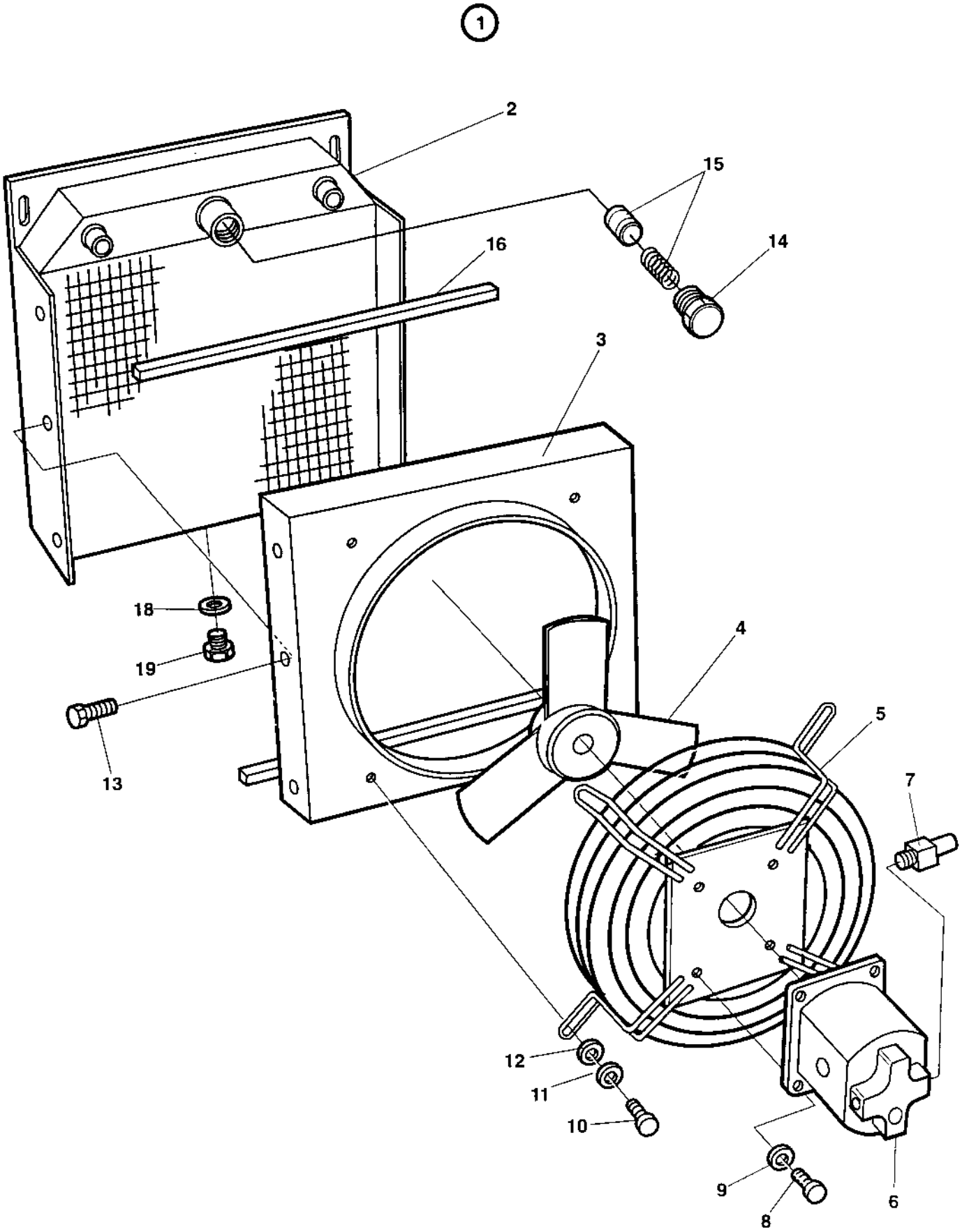

374494 Oil cooler cpl

Ref. No.	Part No.	Rem.	Qty	Description	Code
1			1	Oil cooler cpl	
2	935780		1	.Oil cooler	
3	935782		1	.Fan shroud	
4	935781		1	.Fan	
5	359223		1	.Grid	
6	359226		1	.Hydraulic motor	D
	902882		1	..Seal kit	D
	935783		1	..Key	D
7			1	..Valve	D
8			4	.Screw	D
9			4	.Washer	D
10			4	.Screw	D
11			4	.Washer	D
12			4	.Washer	D
13			6	.Screw	D
14	359225		1	.Plug	
15	359224		1	.Valve	
16			1	.Rubber seal	
18	160024		1	.O-ring	
19	332038		1	.Plug	

Steering system

18244

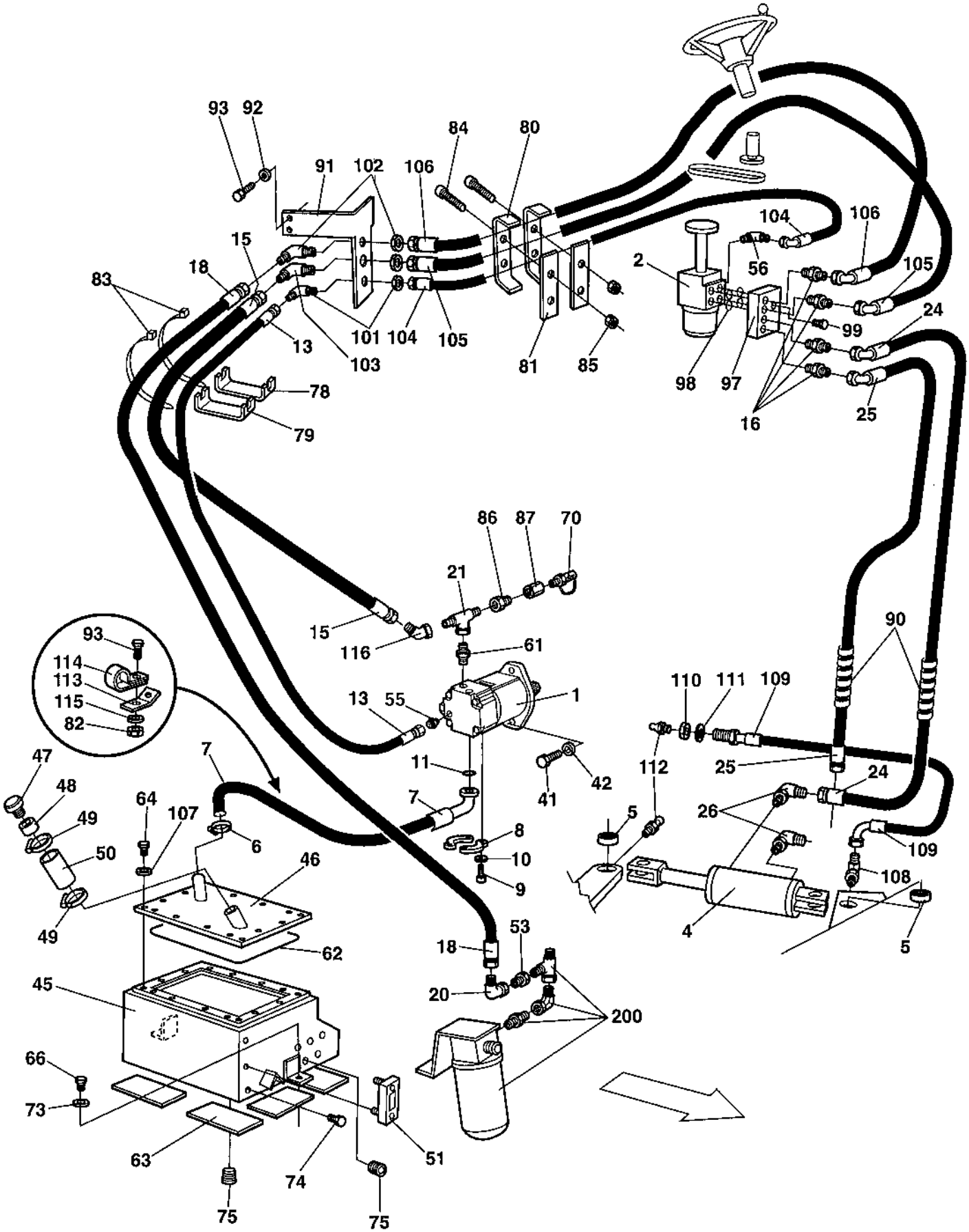

Steering system

Ref. No.	Part No.	Rem.	Qty	Description		Code
1	376916		1	Hydraulic pump		
2	359139		1	Pilot valve (Page 106)		C
4	392002		1	Steering cylinder		
5	813316		2	Ball bushing		D
6	923378		1	Hose clamp		
7	376040		1	Hydraulic hose		
8	232119		2	Split flange		
9	500029		4	Screw	M10-1,5x30 8.8	
10	904637		4	Washer	10x18x2	
11	813443		1	O-ring		D
13	483698		1	Hydraulic hose		
15	482990		1	Hydraulic hose		
16	924731		4	Connector		
18	482995		1	Hydraulic hose		
20	334524	A	1	Connector		
21	234953		1	Tee-connector		
24	482917		1	Hydraulic hose		D
25	482918		1	Hydraulic hose		D
26	334420		2	Elbow 90		
41	508096		2	Screw	M10-1,5x25H 8,8	
42	904637		2	Washer	10x18x2	
45	359632		1	Hydraulic oil tank		
46	359639		1	Cover		
47	357138		1	Ventilating filter		A
48	357139		1	Connector		
49	313008		2	Hose clamp		D
50	205067	C	1XL	Rubber hose		
51	989151		1	Oil level glass		D
53	929122		1	Reducing		
55	334143		1	Straight connector		
56	334203		1	Elbow 90, O-ring		
61	334121		1	Straight connector		
62	357141		1	O-ring		
63	357459		6	Rubber cloth		
64	500053		14	Screw	M8-1,25x20 8.8	
66	500028		2	Screw	M10-1,5x25 8,8	
70	910161		1	Measuring nipple		D
73	904567		2	Washer	10,5x28x6 HB305	
74	232122		1	Plug	3/4NPTF	
75	892446		2	Plug		
78	359647	D	N	Hose clamp		
79	359648	E	N	Hose clamp		
80	359649		2	Hose clamp		
81	359650		2	Hose clamp		
82	902286		1	Lock nut		
83	313102		N	Cable ties		
84	500061		4	Screw	M6-1X35 8,8	
85	902285		4	Lock nut		
86	334461		1	Reducing		
87	433830401		1	Connector		
88	502036		4	Screw	3/8"-16UNCx11/4"8.8	
89	904567		4	Washer	10,5x28x6 HB305	
90	903082	G	2XL	Hose shield		
91	371519		1	Holder plate		
92	904556		1	Washer	8,4x16x3,0	

A) At filter
C) L=0,250 m
D) 106/30/18 mm
E) 90/30/20 mm
G) L=0,350 m

Steering system

18244

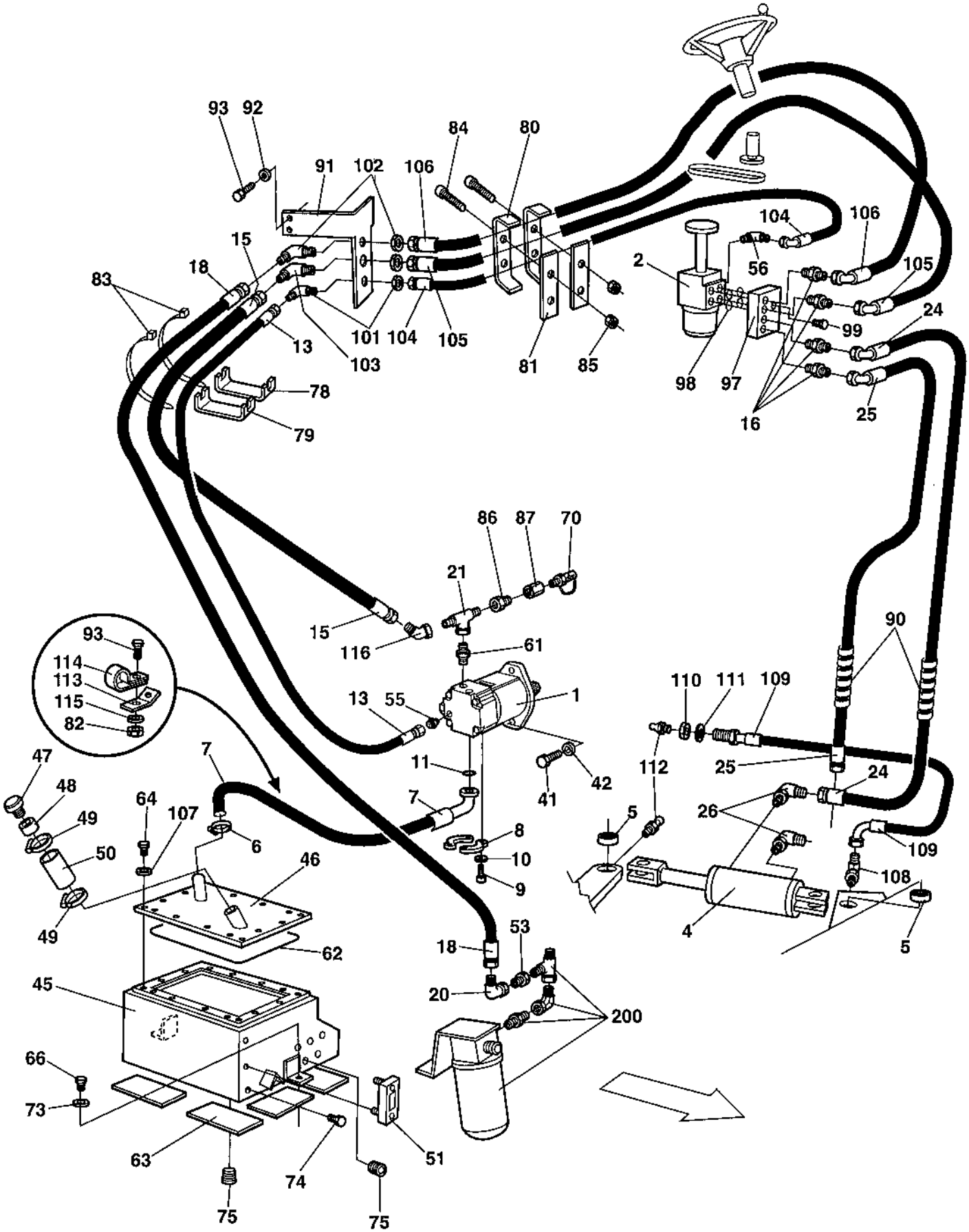

Steering system

Ref. No.	Part No.	Rem.	Qty	Description		Code
93	500021		3	Screw	M8-1,25x25 8.8	
97	370155		1	Valve block		
98	160287		4	O-ring		D
99	903773		2	Screw	M10x1x50 8,8	
101	235002		1	Connector		
102	904115		1	Bulkhead elbow		D
103	234512		1	Bulkhead union		
104	482257		1	Hydraulic hose		
105	482992		1	Hydraulic hose		
106	482993		1	Hydraulic hose		
107	603009		14	Washer		
108	371669		1	Straight connector		
109	903812		1	Hydraulic hose		
110	903831		1	Nut	M12	
111	904231		1	Washer	13x24x2	
112	926214		2	Grease fitting		D
113	372680		1	Bracket		
114	921119		1	Pipe clamp		
115	904229		1	Washer		
116	234662		1	Elbow 45		
200				Existing parts		

Steering system

18244

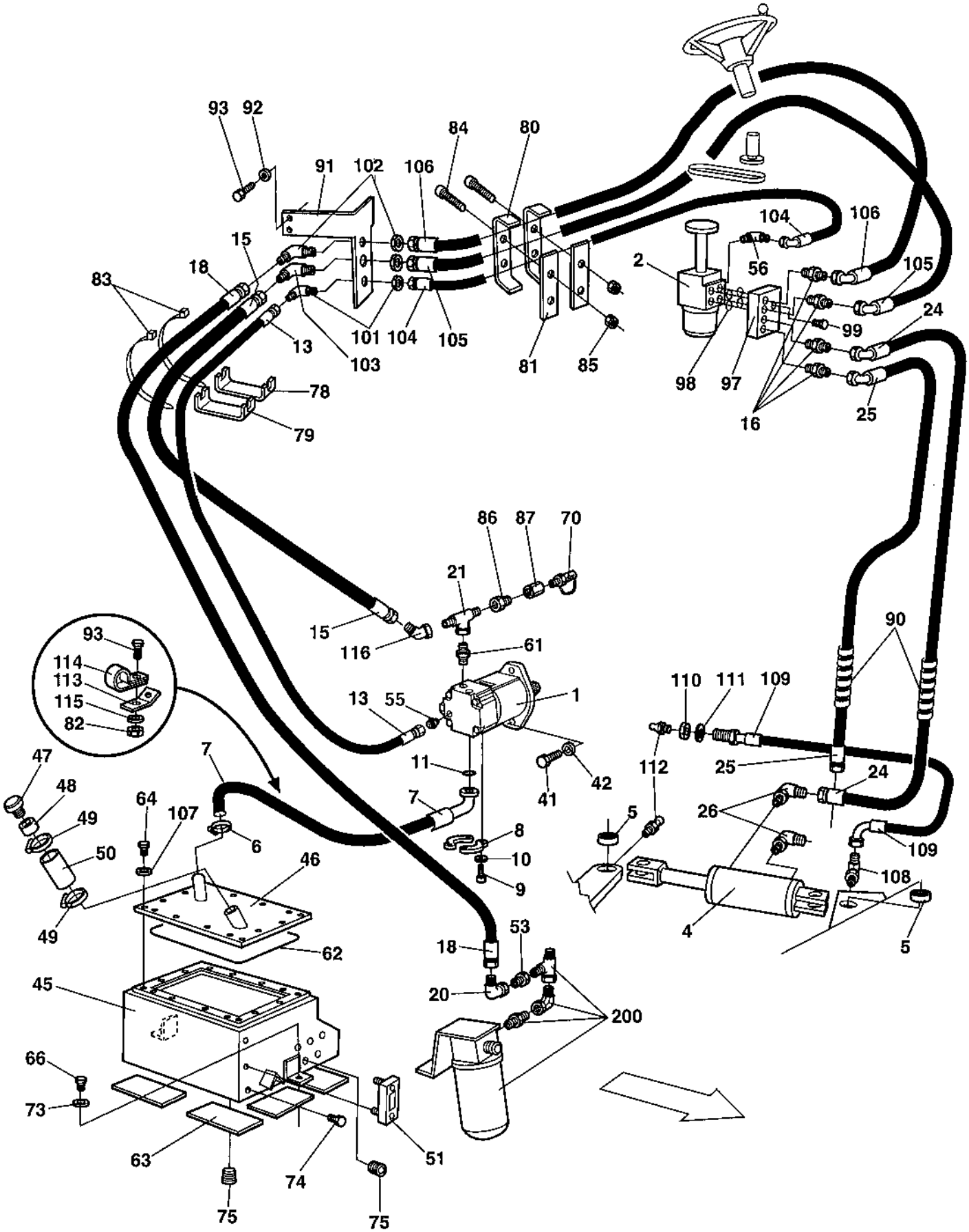

Steering system

Ref. No.	Part No.	Rem.	Qty	Description		Code
1	395952		1	Hydraulic pump		
2	359139		1	Pilot valve (Page 106)		C
4	392002		1	Steering cylinder		
5	813316		2	Ball bushing		D
6	923378		1	Hose clamp		
7	376040		1	Hydraulic hose		
8	232119		2	Split flange		
9	500029		4	Screw	M10-1,5x30 8.8	
10	904637		4	Washer	10x18x2	
11	813443		1	O-ring		D
13	483698		1	Hydraulic hose		
15	482990		1	Hydraulic hose		
16	924731		4	Connector		
18	482995		1	Hydraulic hose		
20	334524	A	1	Connector		
21	234953		1	Tee-connector		
24	482917		1	Hydraulic hose		D
25	482918		1	Hydraulic hose		D
26	334420		2	Elbow 90		
41	508096		2	Screw	M10-1,5x25H 8,8	
42	904637		2	Washer	10x18x2	
45	359632		1	Hydraulic oil tank		
46	359639		1	Cover		
47	357138		1	Ventilating filter		A
48	357139		1	Connector		
49	313008		2	Hose clamp		D
50	205067	C	1XL	Rubber hose		
51	989151		1	Oil level glass		D
53	929122		1	Reducing		
55	334143		1	Straight connector		
56	334203		1	Elbow 90, O-ring		
61	334121		1	Straight connector		
62	357141		1	O-ring		
63	357459		6	Rubber cloth		
64	500053		14	Screw	M8-1,25x20 8.8	
66	500028		2	Screw	M10-1,5x25 8,8	
70	910161		1	Measuring nipple		D
73	904567		2	Washer	10,5x28x6 HB305	
74	232122		1	Plug	3/4NPTF	
75	892446		2	Plug		
78	359647	D	N	Hose clamp		
79	359648	E	N	Hose clamp		
80	359649		2	Hose clamp		
81	359650		2	Hose clamp		
82	902286		1	Lock nut		
83	313102		N	Cable ties		
84	500061		4	Screw	M6-1X35 8,8	
85	902285		4	Lock nut		
86	334461		1	Reducing		
87	433830401		1	Connector		
88	502036		4	Screw	3/8"-16UNCx11/4"8.8	
89	904567		4	Washer	10,5x28x6 HB305	
90	903082	G	2XL	Hose shield		
91	371519		1	Holder plate		
92	904556		1	Washer	8,4x16x3,0	

A) At filter
C) L=0,250 m
D) 106/30/18 mm
E) 90/30/20 mm
G) L=0,350 m

Steering system

18244

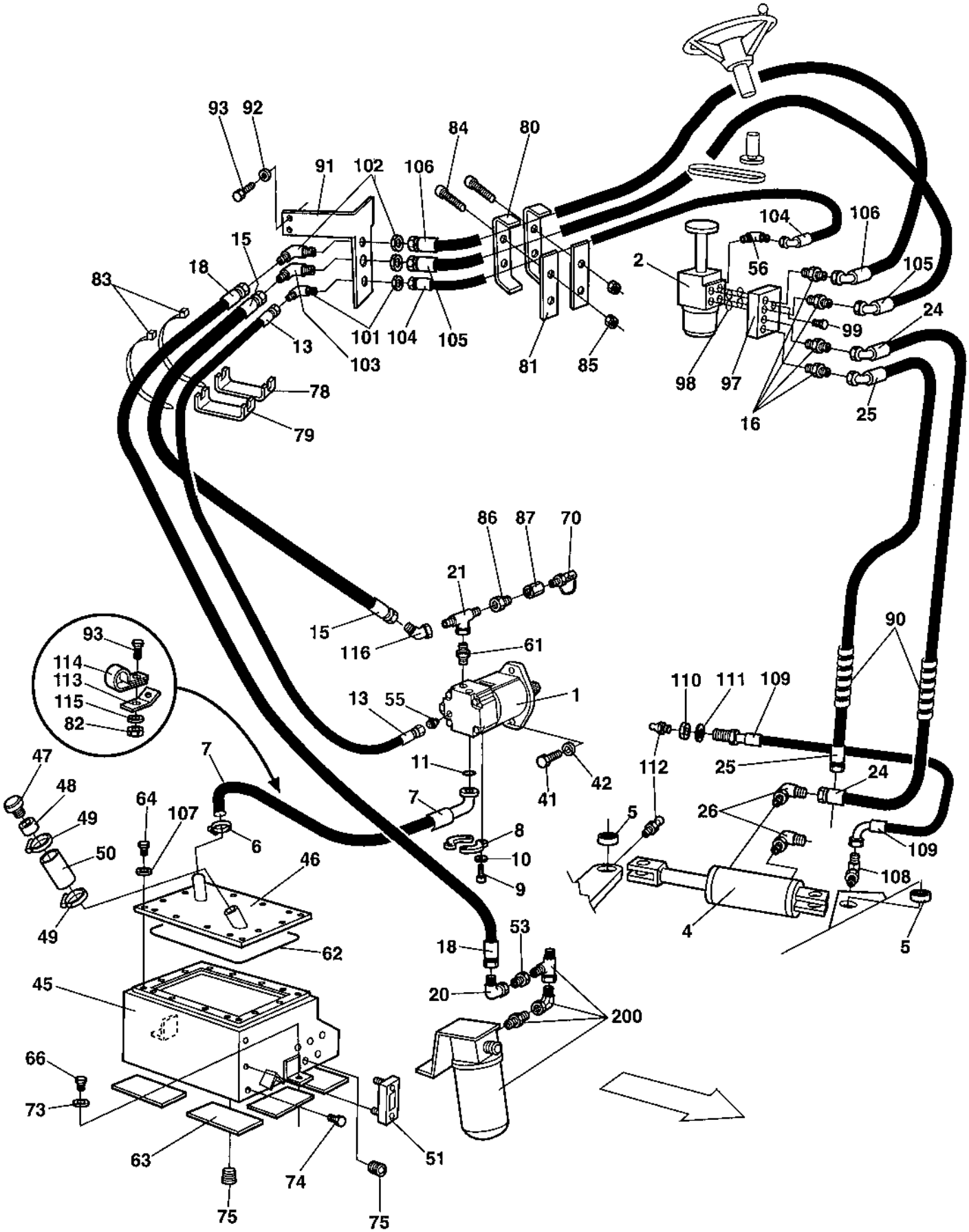

Steering system

Ref. No.	Part No.	Rem.	Qty	Description		Code
93	500021		3	Screw	M8-1,25x25 8.8	
97	370155		1	Valve block		
98	160287		4	O-ring		D
99	903773		2	Screw	M10x1x50 8,8	
101	235002		1	Connector		
102	904115		1	Bulkhead elbow		D
103	234512		1	Bulkhead union		
104	482257		1	Hydraulic hose		
105	482992		1	Hydraulic hose		
106	482993		1	Hydraulic hose		
107	603009		14	Washer		
108	371669		1	Straight connector		
109	903812		1	Hydraulic hose		
110	903831		1	Nut	M12	
111	904231		1	Washer	13x24x2	
112	926214		2	Grease fitting		D
113	372680		1	Bracket		
114	921119		1	Pipe clamp		
115	904229		1	Washer		
116	234662		1	Elbow 45		
200				Existing parts		

359139 Pilot valve

15710

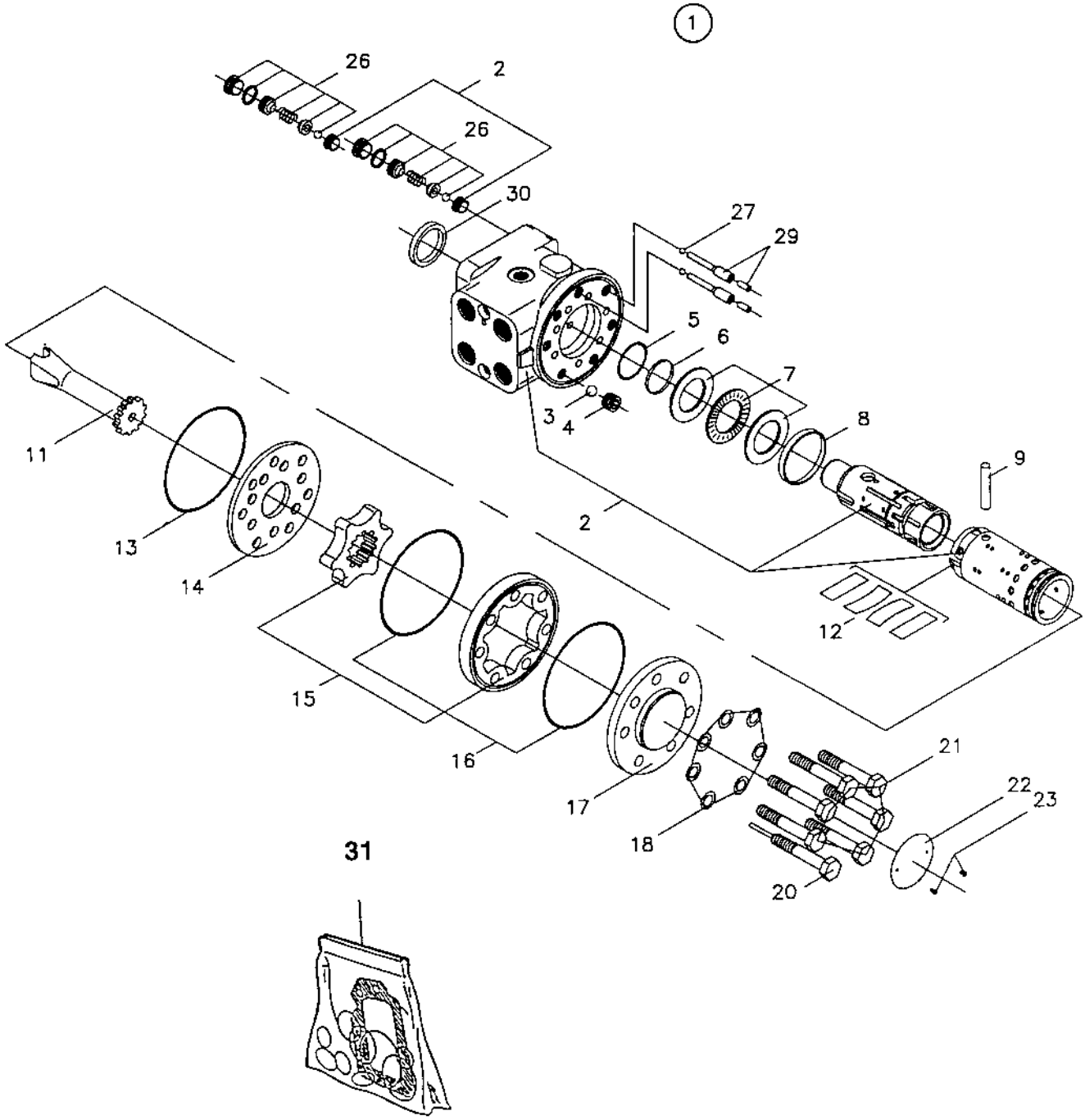

359139 Pilot valve

Ref. No.	Part No.	Rem.	Qty	Description		Code
1			1	Pilot valve, cpl		
2			1	.Housing, cpl		
3	480468		1	.Ball		
4	480446		1	.Threaded bushing		D
5		1	1	.O-ring		D
6		1	1	.Seal ring		D
7	911620		1	.Bearing		D
8	480449		1	.Ring		
9	480447		1	.Cross pin		
11	902861		1	.Cardan shaft		
12	909211		1	.Set of springs		
13		1	1	.O-ring		
14	902862		1	.Valve plate		
15	909212		1	.Gear wheel set		
16		1	2	.O-ring		
17	480450		1	.End cap		
18		1	7	.Washer		
20	909213		1	.Screw with pin		
21	909214		6	.Screw		
22			1	.Plate		
23			2	.Screw		
26	929012		2	.Shock valve	22,5-24,0 MPa	
27	929013		2	.Ball		
29	929014		2	.Rolled pin		
30		1	1	.Dust seal ring		
31	480457		1	.Spare parts kit		D

1) Includes in seal kit item 31.

Offset drum Option

17255-1

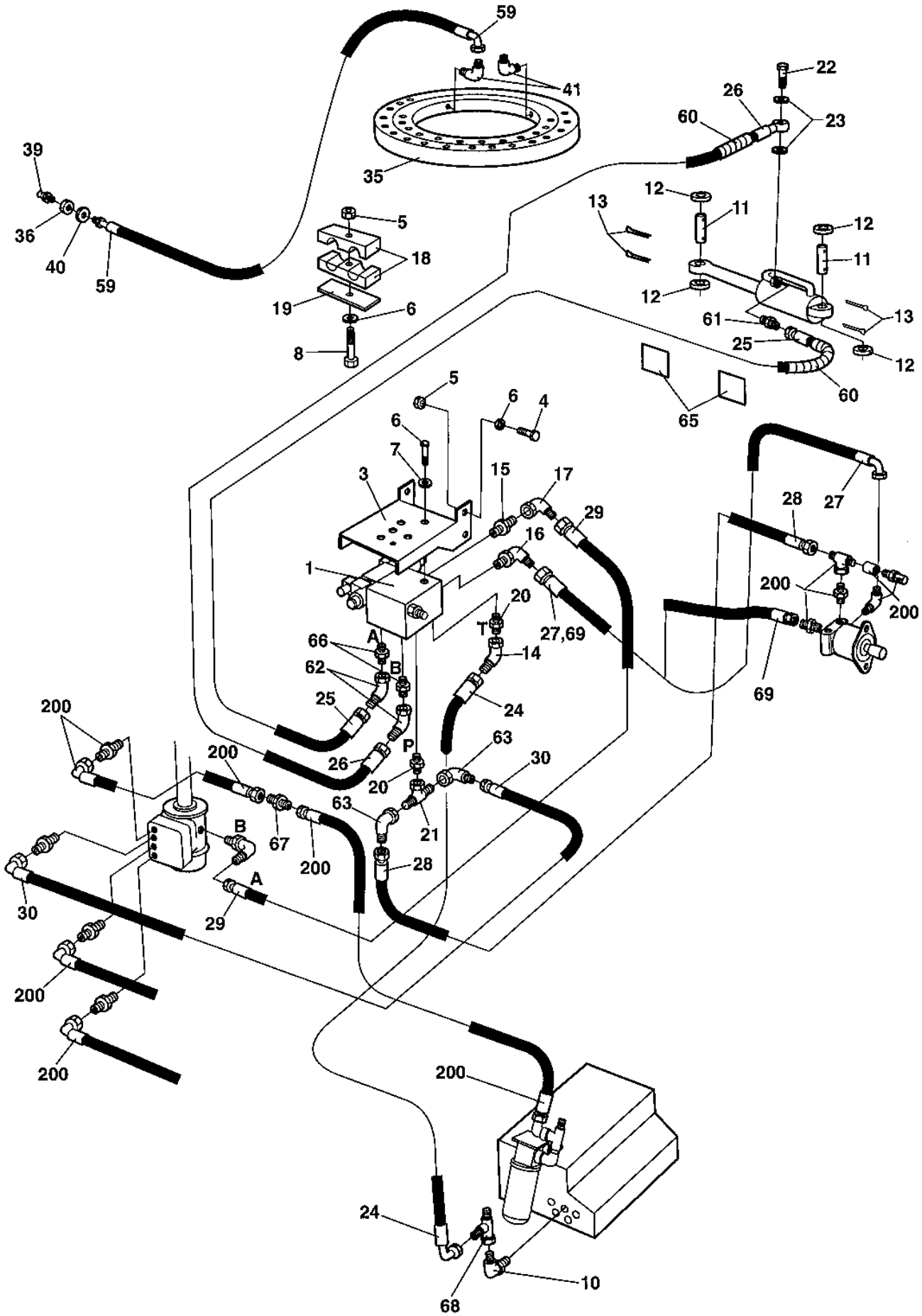

Offset drum Option

Ref. No.	Part No.	Rem.	Qty	Description		Code
1	380780	4	1	Direction control valve (Page 110)		
	377432	5	1	Direction control valve		
3	381029		1	Holder plate		
4	500021		4	Screw	M8-1,25x25 8.8	
5	570005		5	Nut	M8	
6	904229		8	Washer		
7	500053		3	Screw	M8-1,25x20 8.8	
8	500068		1	Screw	M08x65	
9	373403	2	1	Cylinder (Page 112)	Offset drum	C
	377584	3	1	Cylinder		
10			1	Existing		
11	357419		2	Shaft		D
12	600016		4	Washer	26x45x4	
13	630019		4	Cotter pin		D
14	234662		1	Elbow 45		
15	234388		1	Connector		
16	234850		1	Elbow 90, O-ring		
17	334196		1	Elbow 90		
18	904871		1	Pipe clamp		
19	904872		1	Cover plate		
20	334121		2	Straight connector		
21	234953		1	Tee-connector		
22	330171		2	Hollow screw		
23	162024		2	Washer, sealing		
24	483411		1	Hydraulic hose		
25	483513		1	Hydraulic hose		
26	359768		1	Hydraulic hose		D
27	482472		1	Hydraulic hose		
28	483231		1	Hydraulic hose		
29	482064		1	Hydraulic hose		
30	482940		1	Hydraulic hose		
35	359192		1	Bearing		
36	903831		4	Nut	M12	
39	926214		4	Grease fitting		D
40	904231		4	Washer	13x24x2	
41	373183		4	Elbow 90		
59	903813		4	Hydraulic hose		
60	903082		NXL	Hose shield		
61	334236		1	Adapter		
62	801781		2	Connector		
63	334197		2	Elbow 90		
65	903422		2	Decal "SAFETY"		
66	924731		2	Connector		
67	925762		1	Adapter		
68	334135		1	Tee-connector		
69	483699		1	Hydraulic hose		
200		1		Existing parts		

1) See section "Steering system".
2) Replaced by PN 377584.
3) Replaces PN 373403.
4) Replaced by PN 377432.
5) Replaces PN 380780.

380780 Direction control valve

17257

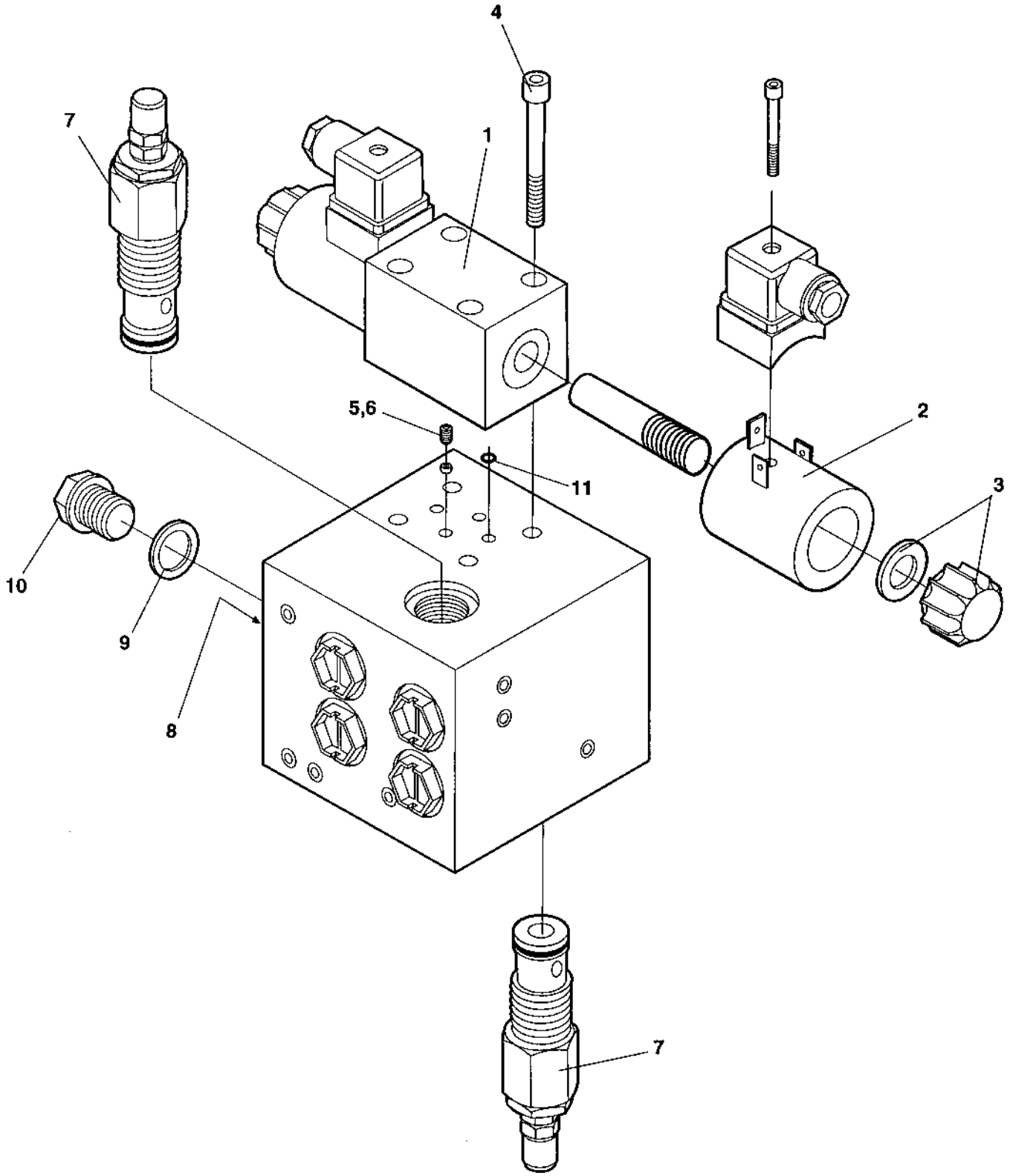

380780 Direction control valve

Ref. No.	Part No.	Rem.	Qty	Description		Code
			1	Valve, cpl		
1	937800		1	.Valve		
2	937801		2	.Coil		
3	937802		2	.Nut incl. seal		
4	937803		4	.Screw		
5	937804		1	.Orifice	1,5 mm	
6			1	.Not used on this model		
7	937806		2	.Overcenter valve		
8	937807		2	.Shuttle valve		
9	937808		2	.Copper washer		
10	937809		2	.Plug		
11	937810		4	.O-ring		

373403 Cylinder Offset drum

16289

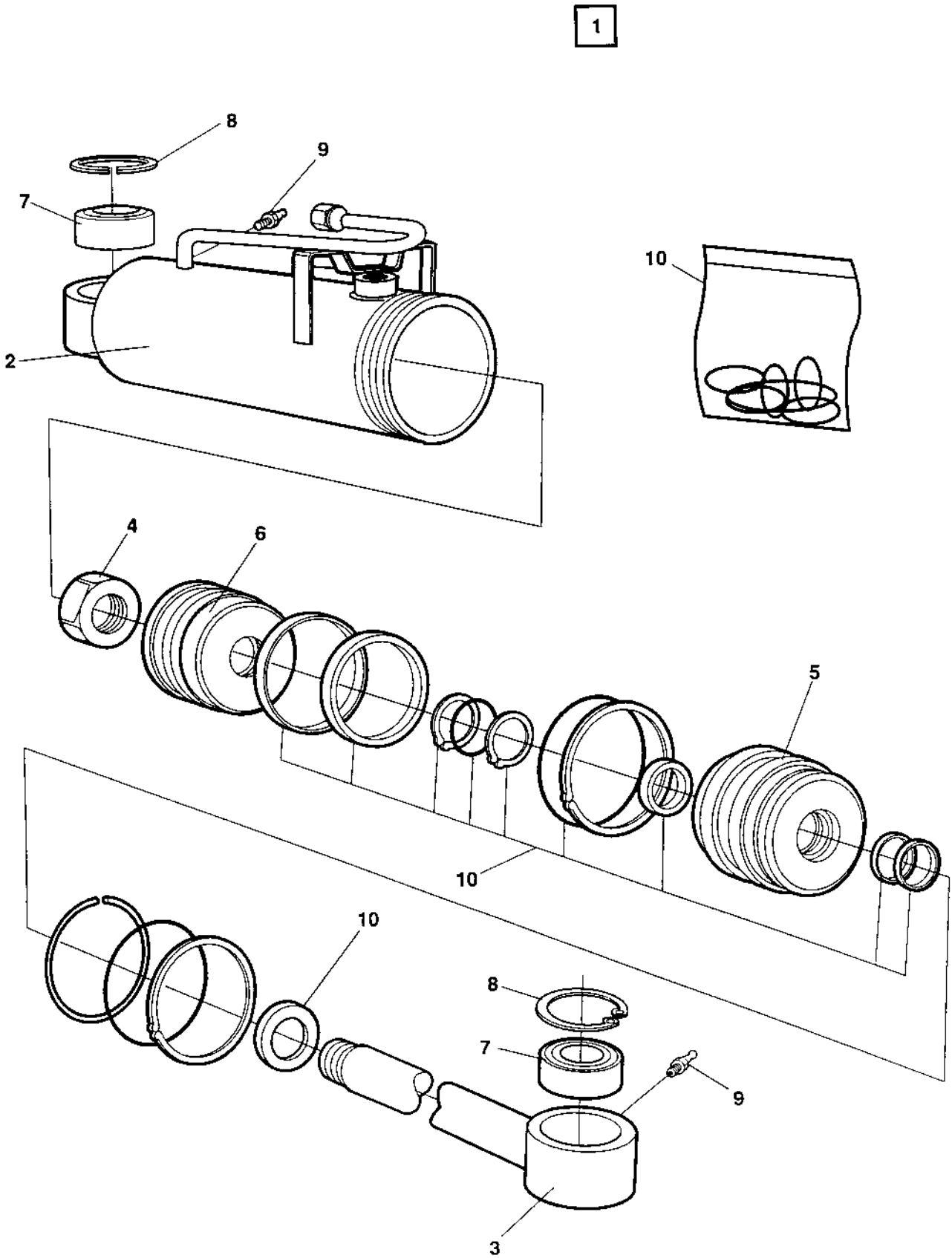

373403 Cylinder Offset drum

Ref. No.	Part No.	Rem.	Qty	Description	Code
1			1	Hydraulic cylinder, cpl	
2			1	.Cylinder	
3			1	.Piston rod	
4			1	.Cylinder nut	
5			1	.Gland	
6			1	.Piston	
7	238272		2	.Slide bearing	D
8	151012		2	.Retaining ring	
9	926214		2	.Grease fitting	D
10	904164		1	.Seal kit	D

Brake system

18496

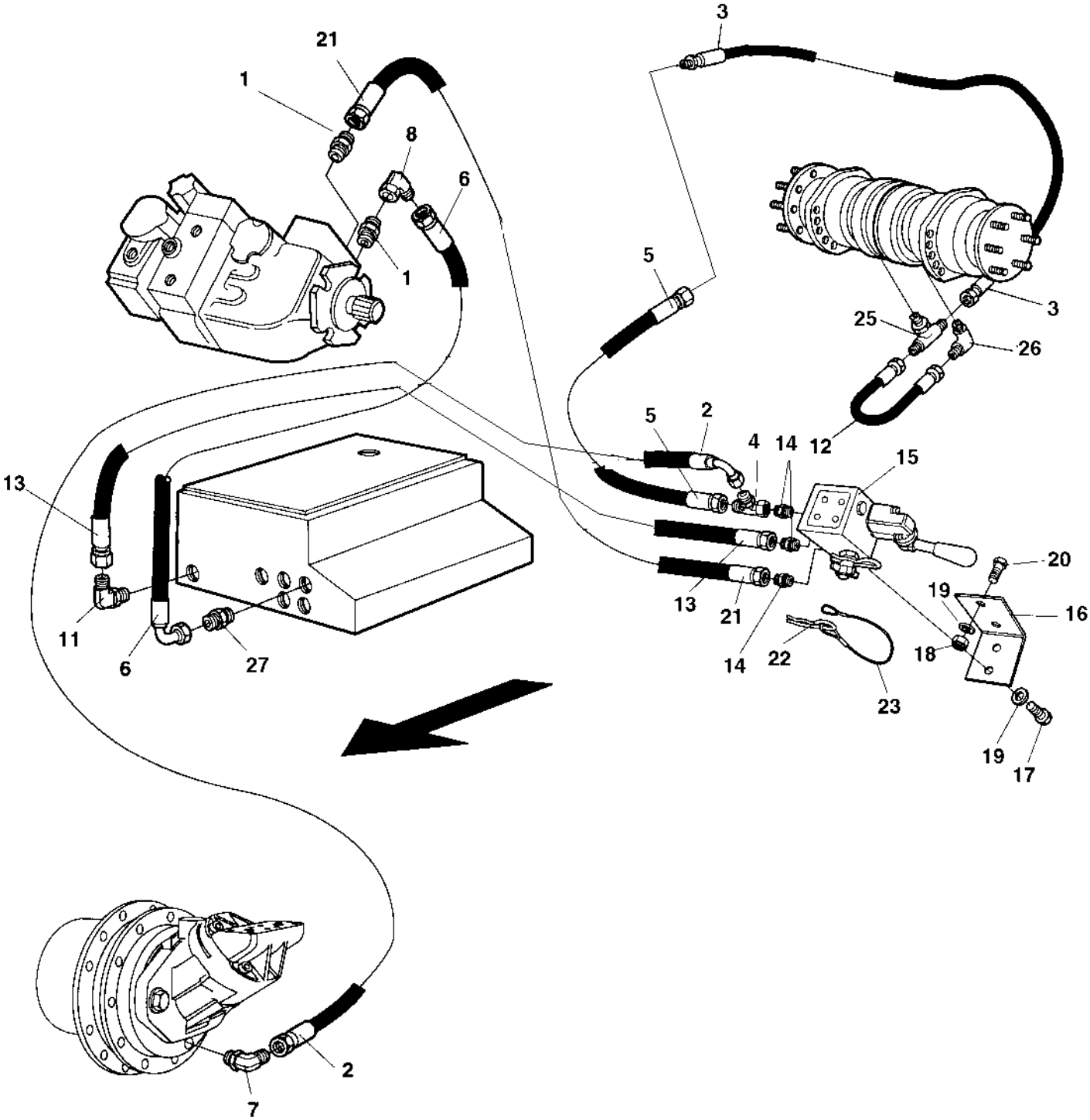

Brake system

Ref. No.	Part No.	Rem.	Qty	Description		Code
1	234233		2	Adapter		
2	484061		1	Hydraulic hose		D
3	392617		1	Hydraulic hose		
4	334234		1	Tee-connector		
5	484065		1	Hydraulic hose		
6	482782		1	Hydraulic hose		
7	792094		2	Elbow 90		
8	334524		1	Connector		
11	334410		1	Adapter		
12	482936		1	Hydraulic hose		
13	483463		1	Hydraulic hose		
14	334463		3	Connector		
15	392743		1	Hand pump		
16	392954		1	Bracket		
17	500019		2	Screw		
18	586003		2	Lock nut	M8	
19	904229		4	Washer		
20	500021		2	Screw	M8-1,25x25 8.8	
21	482757		1	Hydraulic hose		
22	635061		2	Hair clip		D
23	343775		1	Wire		
25	234869		1	T-connector		
26	334389		1	Connector		
27	234349		1	Connector		

Electrical equipment

Ref. No.	Part No.	Rem.	Qty	Description	Code
100				Electrical equipment (Page 118)	
150				Electrical equipment (Page 122)	Additional for cab
175				Electric battery switch (Page 124)	
200				Instrument box (Page 126)	
300				Instrument panel, main (Page 128)	
305				Speed and frequency (Page 130)	Sensors
325				Instrument panel (Page 132)	Upper left
350				Instrument panel (Page 134)	Upper right
375				Instrument panel (Page 136)	Lower left
400				Instrument panel (Page 138)	Lower right
450				Instrument panel (Page 140)	Relay, fuses
500				Emergency stop panel (Page 142)	
601				Driving lights (Page 144)	Direction & licenseplate light
604				Working lights (Page 146)	with/without Rops
605				Protecting cover, Headlight (Page 148)	
610				Working lights, cab (Page 150)	
620				Rotating beacon (Page 152)	
630				Tachograph (Page 154)	
800				Offset drum (Page 156)	Electrical equipment

Electrical equipment

18155

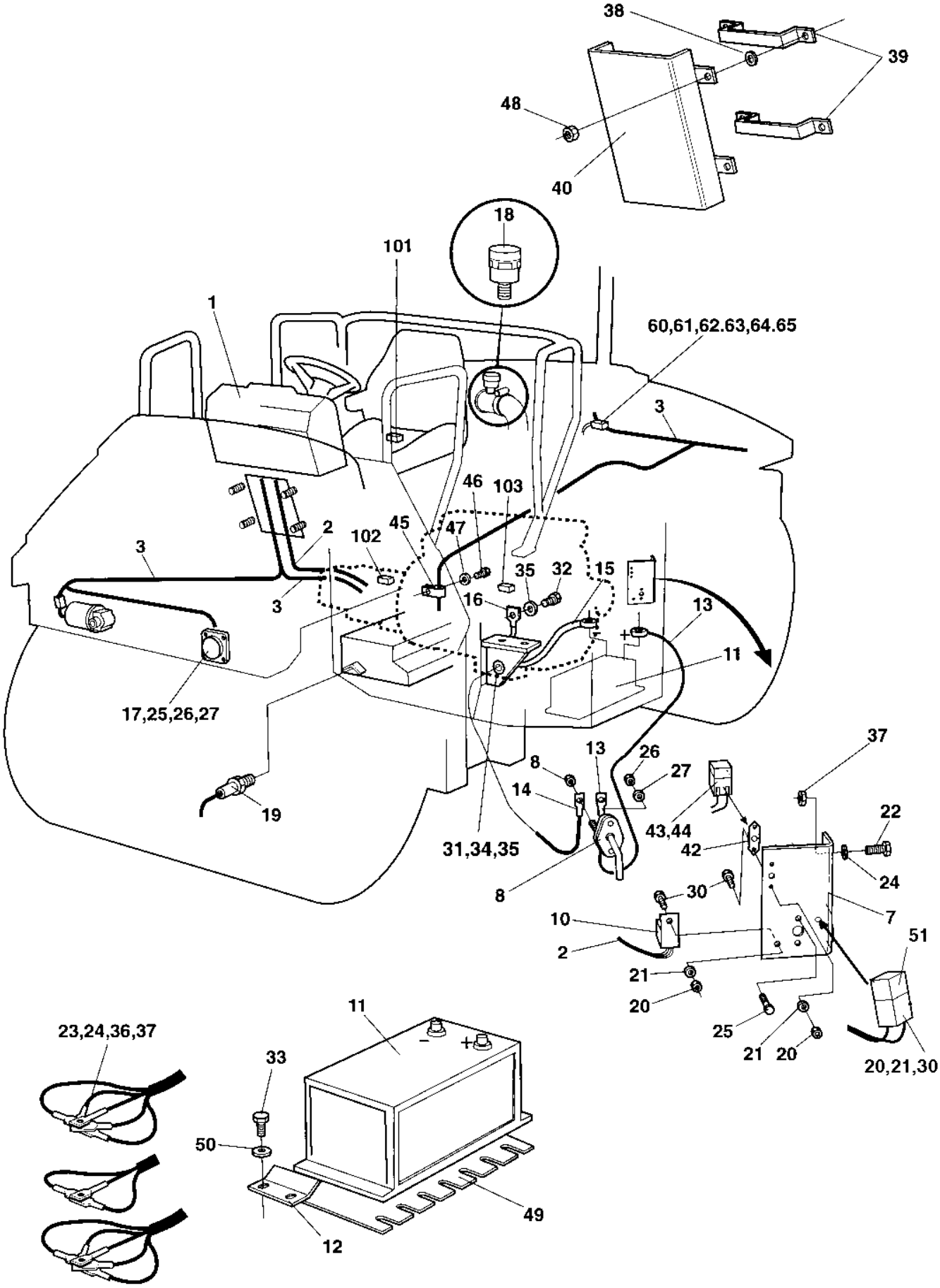

Electrical equipment

Ref. No.	Part No.	Rem.	Qty	Description		Code
1			1	Instrument panel		
2	377356		1	Cable harness		
3	392188		1	Cable harness		
7	372999		1	Holder plate		
8	930150		1	Battery switch		D
	928021		1	.Key		D
10	287597	A	1	Relay		D
11	470021		1	Battery		
12	382267		1	Battery holder		
13	348136		1	Battery cable	(+)	
14	370076		1	Cable		
15	348303		1	Battery cable	(-)	
16	335607		1	Connection cable, coarse		
17	999027		2	Horn		D
18	929023	B	1	Indicator		D
19	903631	C	1	Temperature sensor	Hydraulic oil	D
20	586001		4	Lock nut	M5	
21	904281		6	Washer	5,3x10x1	
22	500022		2	Screw	M8-1,25x30 8,8	
23	586003		3	Lock nut	M8	
24	904229		5	Washer		
25	500040		4	Screw	M6-1x20 8,8	
26	586002		8	Lock nut	M6	
27	904228		8	Washer		
30	500060		3	Screw	M5-0,8x20 8.8	
31	500105		1	Hexagon screw		
32	500028		1	Screw	M10-1,5x25 8,8	
33	500053		2	Screw	M8-1,25x20 8.8	
34	586018		1	Lock nut	M10	
35	904230		3	Washer	10,5X22X2	
36	500239		3	Screw	M8-1.25x50	
37	570005		5	Nut	M8	
38	904044		4	Washer		
39	372775		2	Cable holder		
40	372774		1	Casing		
42	904036		1	Fuse holder		
43	904032	D	1	Fuse holder		
44	904037		1	Fuse	30A	D
45	921104		1	Clamp		
46	500028		1	Screw	M10-1,5x25 8,8	
47	904637		1	Washer	10x18x2	
48	902286		4	Lock nut		
49	382266		1	Battery insulation		
50	904556		2	Washer	8,4x16x3,0	
51	939958		1	Relay		
60	900798	E	1	Buzzer		
	903241	E	1	Back-up alarm	97 dB	D
61	926611		2	Screw		
62	586001		2	Lock nut	M5	
63	904281		2	Washer	5,3x10x1	
64	901766		1	Connector	2-POL	D

A) Start
B) Air filter
C) Hydraulic oil
D) In cable harness
E) Option

Electrical equipment

18155

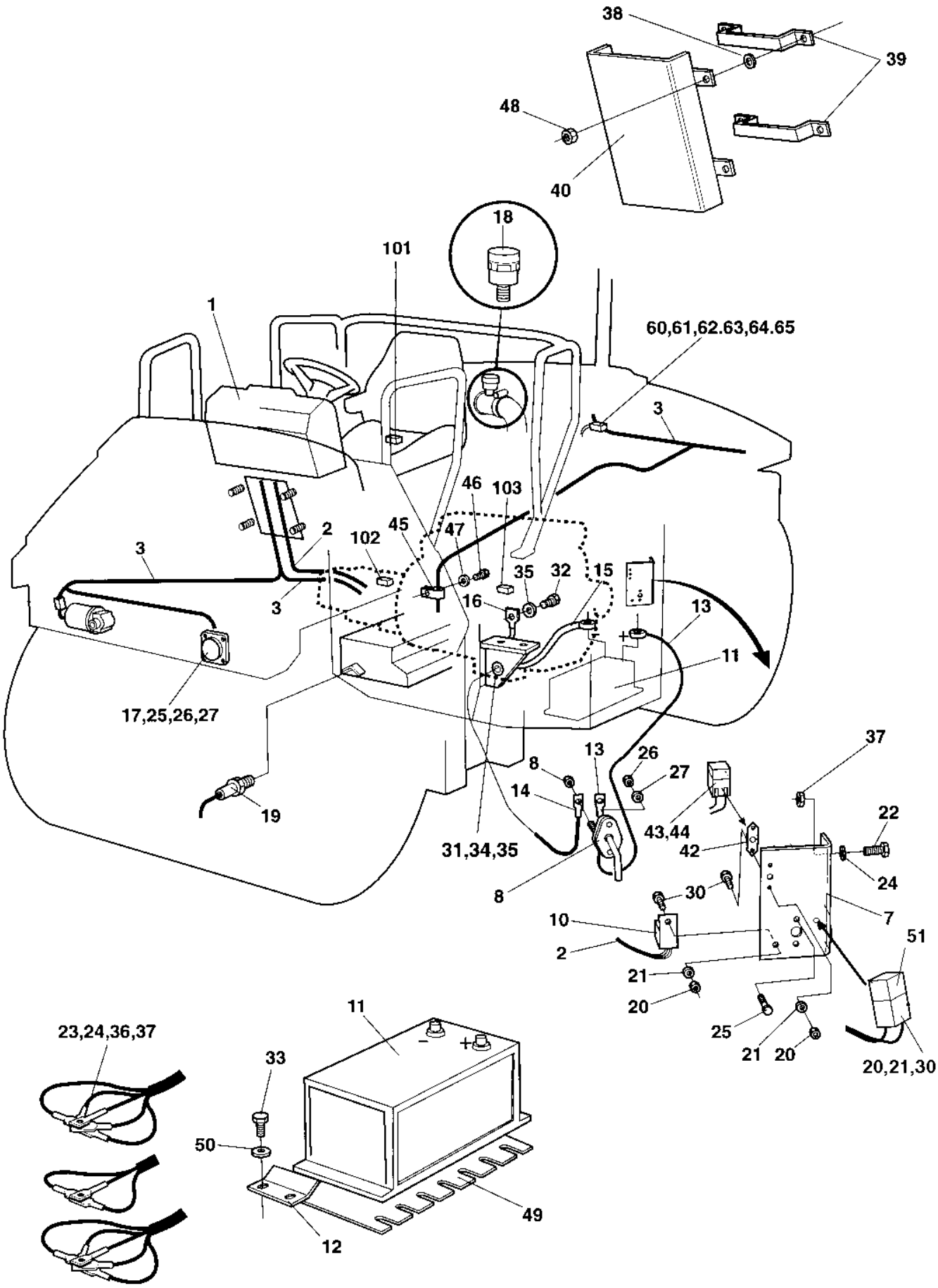

Electrical equipment

Ref. No.	Part No.	Rem.	Qty	Description	Code
65	960273		2	Terminal	
	960275	G	2	Terminal	
101		1	1	Seat switch	
102		F	1	Neutral start switch	
103		2	1	Stop solenoid	

1) See section " Drivers platform "
2) See section " Engine "
F) See propulsion pump
G) For 97dB Backalarm

Electrical equipment Additional for cab

17184

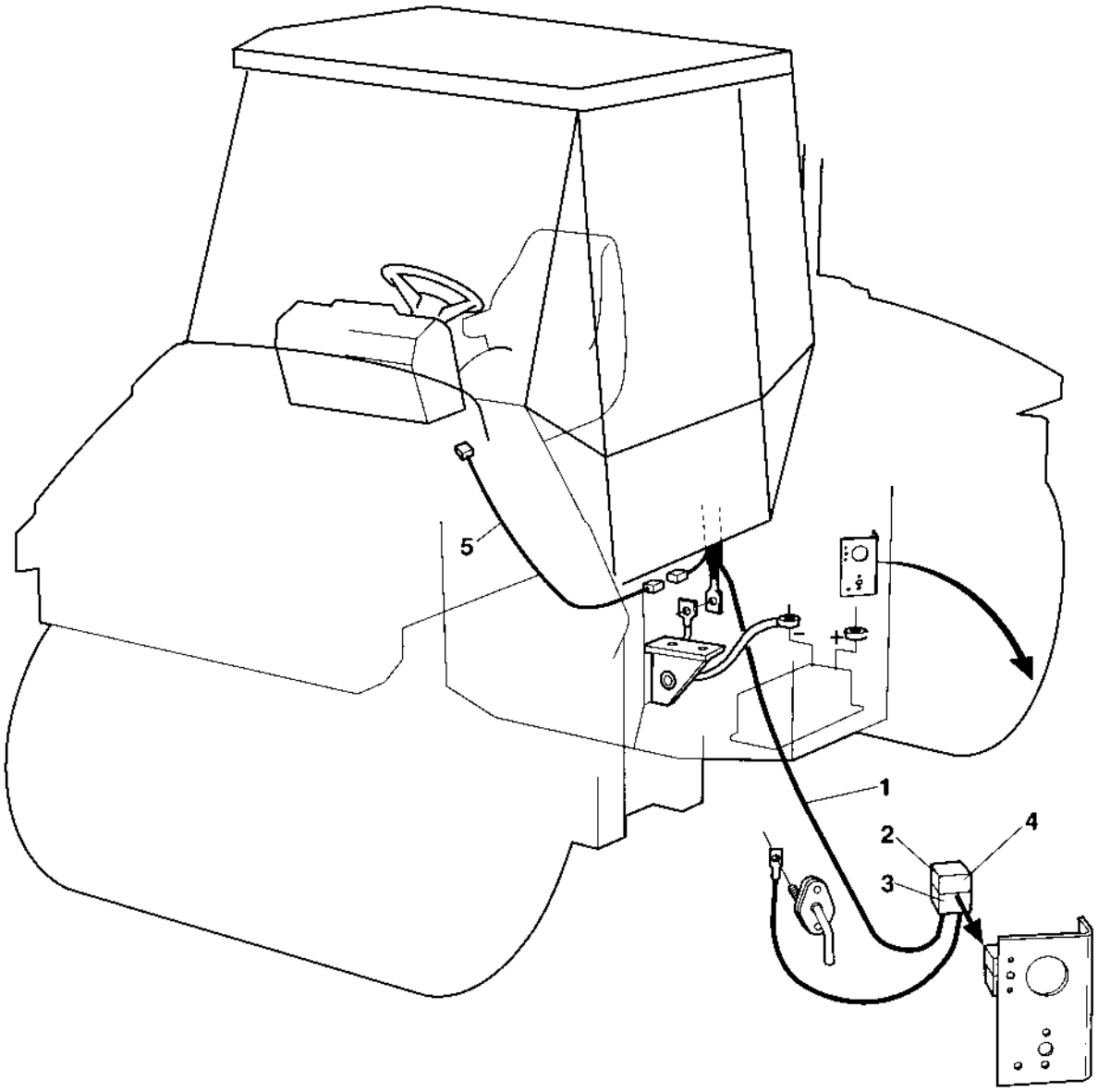

Electrical equipment Additional for cab

Ref. No.	Part No.	Rem.	Qty	Description		Code
1	382838	A	1	Cable harness		
2	904032	B	1	.Fuse holder		
3	904031	B	2	.Terminal		
4	904041		1	Fuse	70A	
5	381893		1	Cable harness		

A) Cabin main support
B) Incl in item 1

Electric battery switch

17644

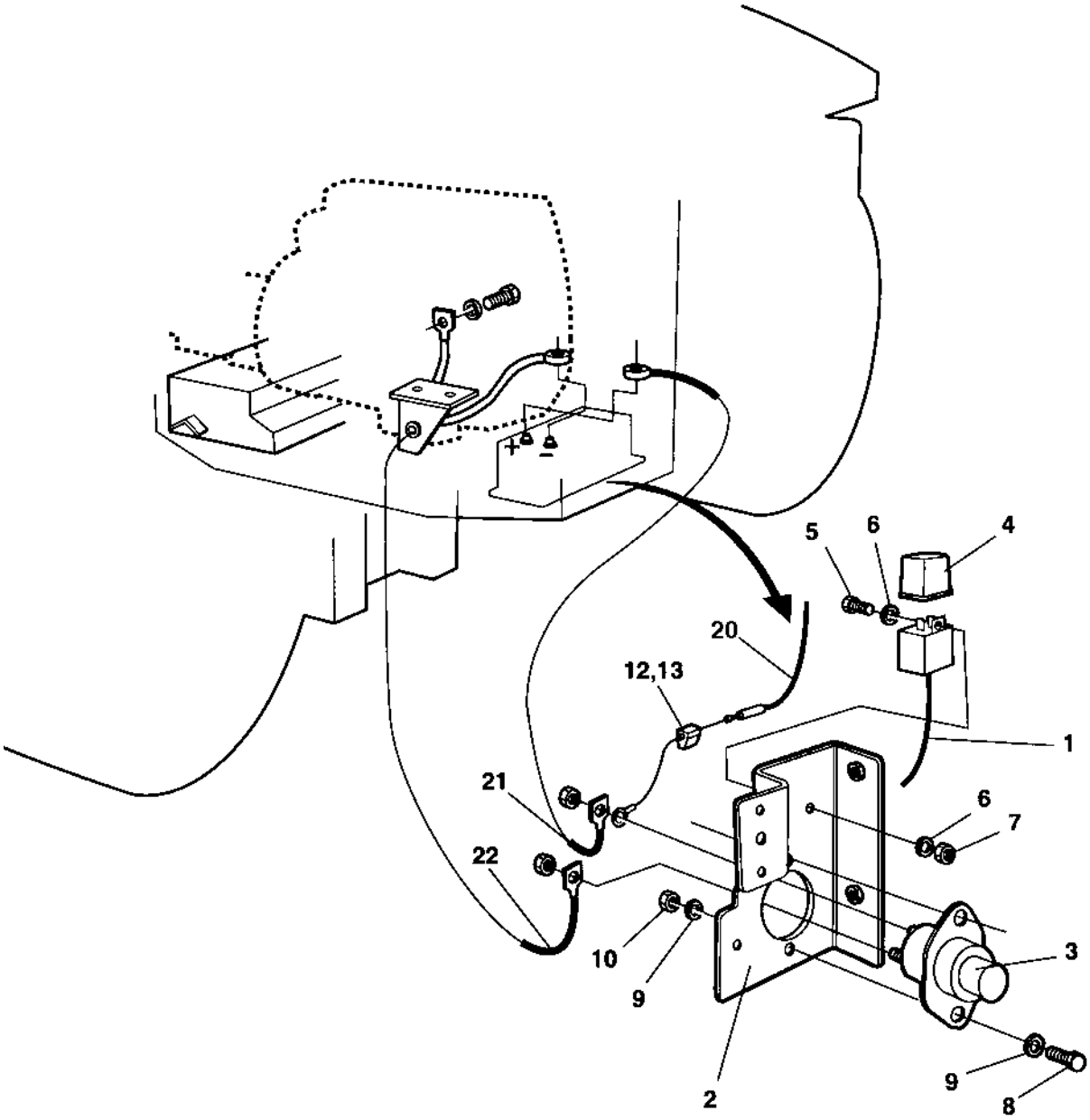

Electric battery switch

Ref. No.	Part No.	Rem.	Qty	Description		Code
1	384038		1	Cable harness		
	357562		1	Relay holder		
2	384055		1	Holder plate		
3	791077		1	Electric battery switch		
4	287597		1	Relay		D
5	508020		1	Screw	M5x20	
6	904281		2	Washer	5,3x10x1	
7	586001		1	Lock nut	M5	
8	500021		2	Screw	M8-1,25x25 8.8	
9	904229		4	Washer		
10	570005		2	Nut	M8	
12	904015		1	Fuse holder		
13	901226		1	Fuse	7.5A	
20		1	1	Cable harness		
21		1	1	Battery cable		
22		1	1	Battery cable		

1) See section " Electrical equipment ".

Instrument box

15672-3

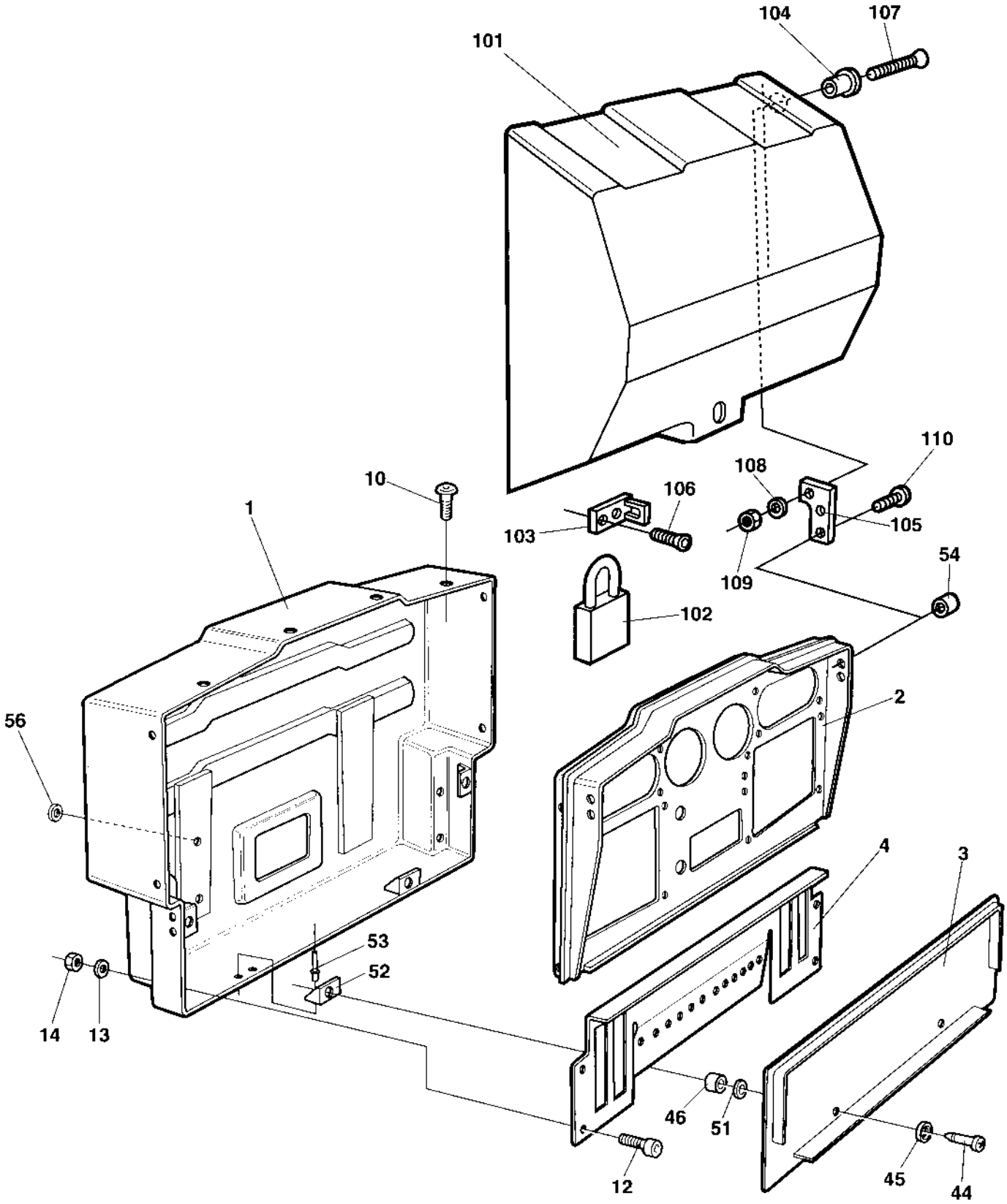

Instrument box

Ref. No.	Part No.	Rem.	Qty	Description	Code
1	374105		1	Instrument box	
2	374379		1	Control panel	
3	359845		1	Cover	
4	370165		1	Relay bracket	
10	903658		8	Screw	M5x10
12	500040		4	Screw	M6-1x20 8,8
13	904228		4	Washer	
14	902285		4	Lock nut	
44	903599		4	Trunnion	
45	903600		4	Rubber washer	
46	903601		4	Washer	
51	903678		4	Rubber washer	
52	903602	1	4	Locking device	
53	903436	1	8	Blind rivet	
54	903653		4	Plug	
56	903961		4	Washer	
100			1	Control panel cover	Option
101	372103		1	.Cover	
102	358881		1	.Pad lock	
103	372104		1	.Eyelet	
104	357855		2	.Bushing	
105	372105		2	.Bracket	
106	904207		2	.Screw	
107	904208		2	.Screw	
108	904228		2	.Washer	
109	586002		2	.Lock nut	M6
110	903658		4	.Screw	M5x10

1) Included in cpl. Instrument box, item 1.

Instrument panel, main

17782

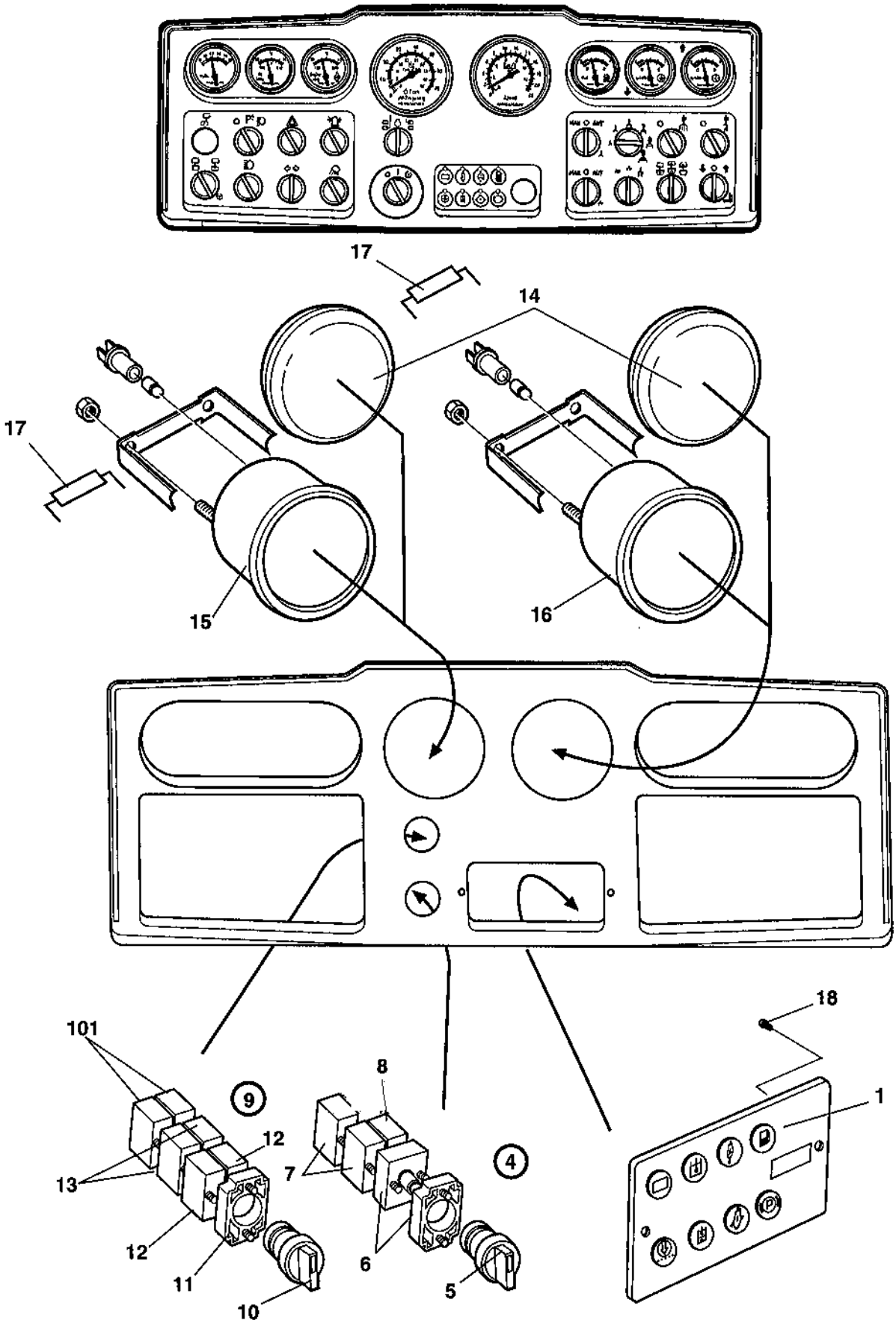

Instrument panel, main

Ref. No.	Part No.	Rem.	Qty	Description	Code
1	380660		1	Display	D
4		B	1	Switch, cpl	D
5	791489		1	.Switch	
6	903875		1	.Flange with light	
	985012		1	Bulb	D
7	930154		2	.Contact piece, NC	
8	930163		1	.Contact piece, NO	D
9		C	1	Switch, cpl	D
10	932058		1	.Switch	
11	903876		1	.Connector	
12	930163		2	.Contact piece, NO	D
13	930154		2	.Contact piece, NC	
14	345139		2	Hole plug	
15	378035		1	Tachometer and frequency meter	
			1	Bulb	
		D	1	Sensor	
16	359347		1	Speedometer	
			1	Bulb	
		D	1	Sensor	
17	357526		3	Resistor	
18	903657		2	Screw	
101	930163		2	Contact piece, NO	D

B) Start
C) Freq/tacho selector
D) See speed and frequency sensors

Speed and frequency Sensors

18467

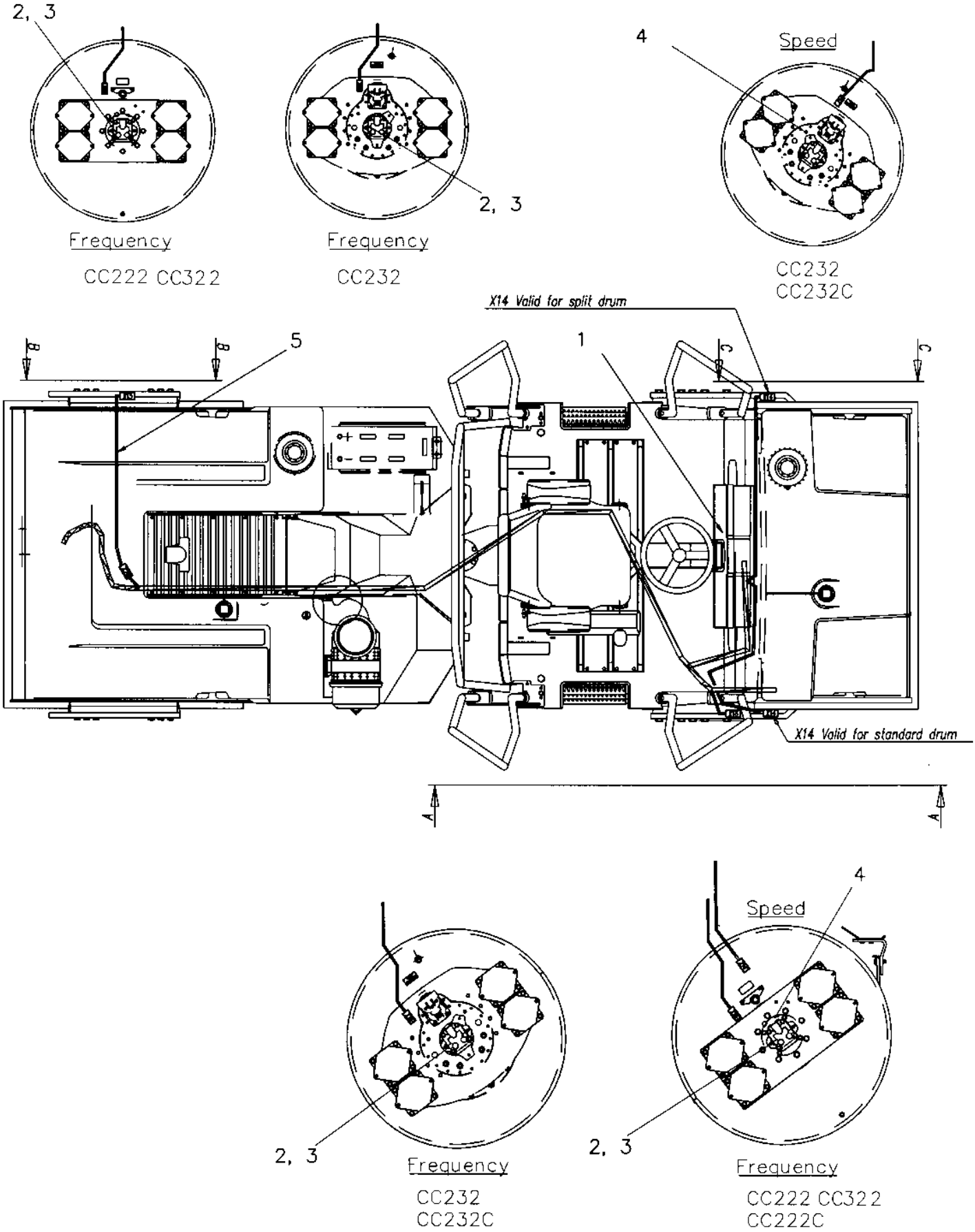

Speed and frequency Sensors

Ref. No.	Part No.	Rem.	Qty	Description		Code
1			1	Control panel		D
2	945169		1	Frequency sensor		
3	392221		2	Mount kit for sensor		
4	372576		1	Sensor	M12-1	
5				Not used on this model		

Instrument panel Upper left

15708-2

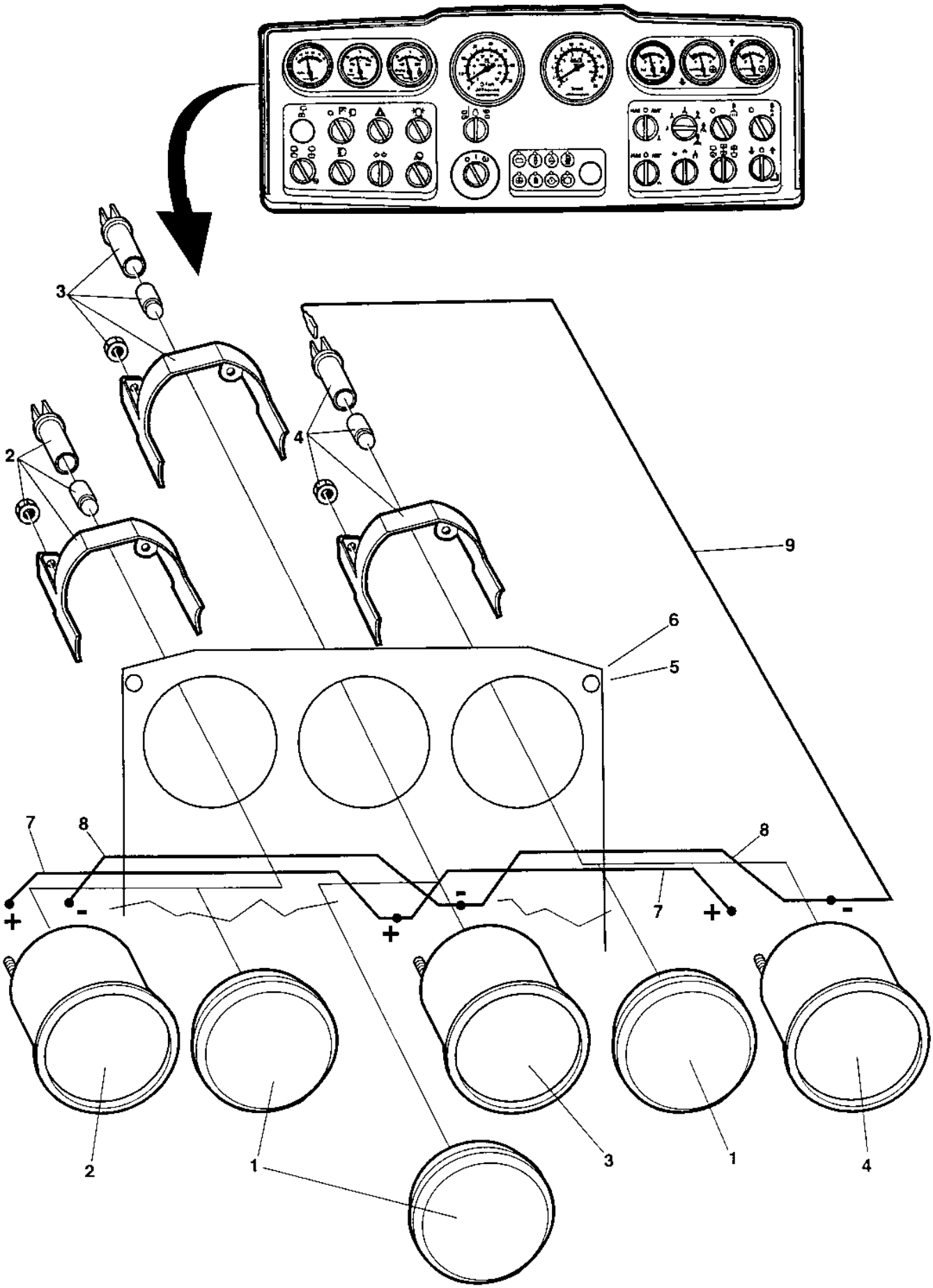

Instrument panel Upper left

Ref. No.	Part No.	Rem.	Qty	Description		Code
1	345870		3	Plug		
2	359340		1	Voltmeter		D
	355258		1	.Lamp holder		
	985012		1	.Bulb		D
3	359341	A	1	Temperature meter, hydraulic oil	Option	D
	355258		1	.Lamp holder		
	985012		1	.Bulb		D
		1	1	Temperature sender		D
4	359342	B	1	Water temperature gauge		
	355258		1	.Lamp holder		
	985012		1	.Bulb		D
		2	1	Temperature sender		D
5		3	1	Control panel plate		D
6	903657		2	Screw		
7	343550		2	Connection cable		
8	903927		2	Cable		
9	904016		3	Cable		

1) See section " Electrical equipment "
2) See section " Engine "
3) See section " Instrument panel, lower left "
A) Hydraulic oil
B) Engine oil

Instrument panel Upper right

15709-2

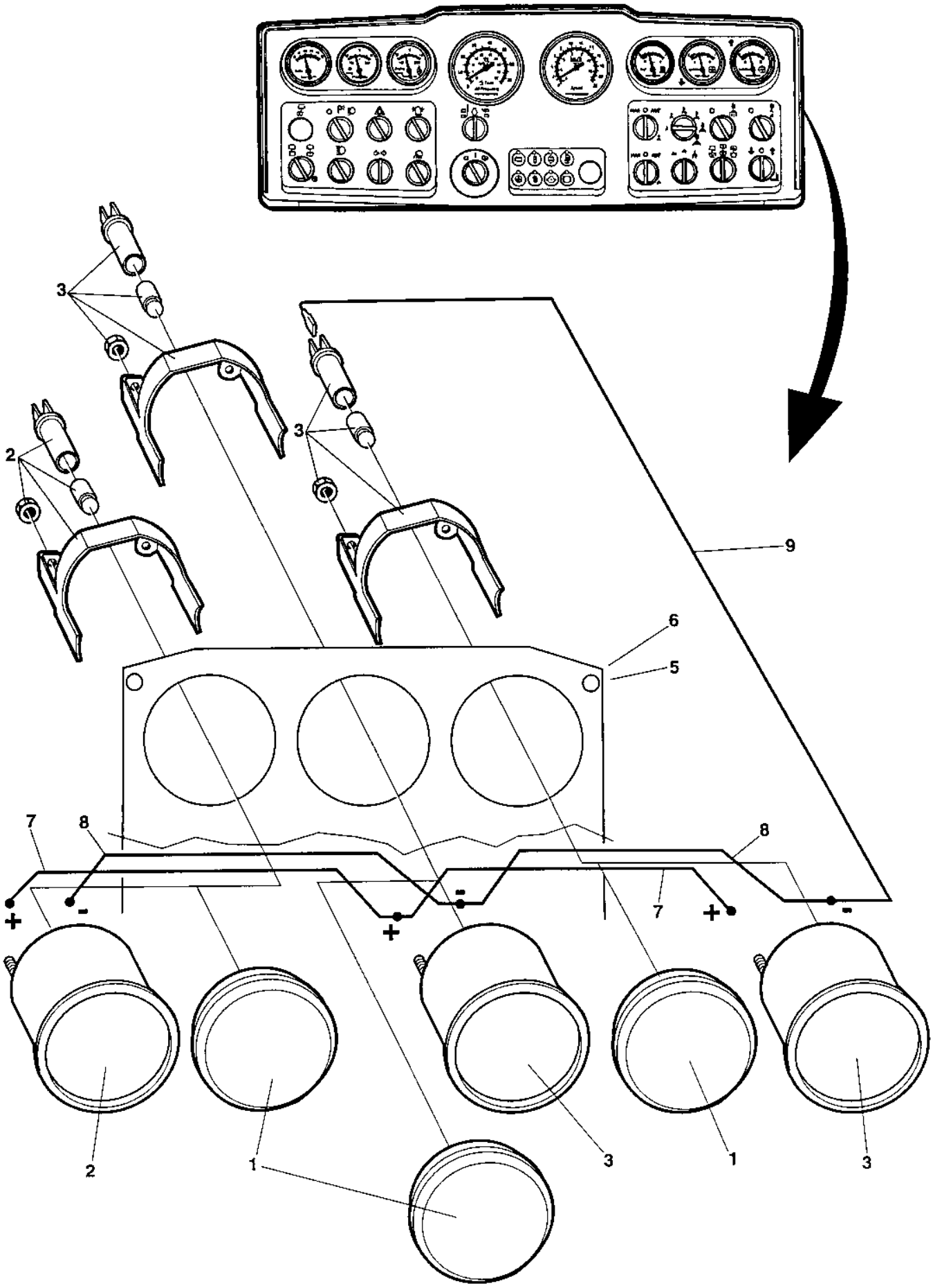

Instrument panel Upper right

Ref. No.	Part No.	Rem.	Qty	Description	Code
1	345870		1	Plug	
2	359343		1	Fuel gauge	D
	355258		1	.Lamp holder	
	985012		1	.Bulb	D
		1	1	Fuel level sender	D
3	359344	A	2	Water gauge	D
	355258		1	.Lamp holder	
	985012		1	.Bulb	D
		2	2	Water level sender	D
5		3	1	Control panel plate	D
6	903657		2	Screw	
7	343550		2	Connection cable	
8	903927		2	Cable	
9	904016		3	Cable	

1) See section " Fuel system "
2) See section " Sprinkler system, tanks "
3) See section " Instrument panel, lower right "
A) Sprinkler tanks

Instrument panel Lower left

15706-3

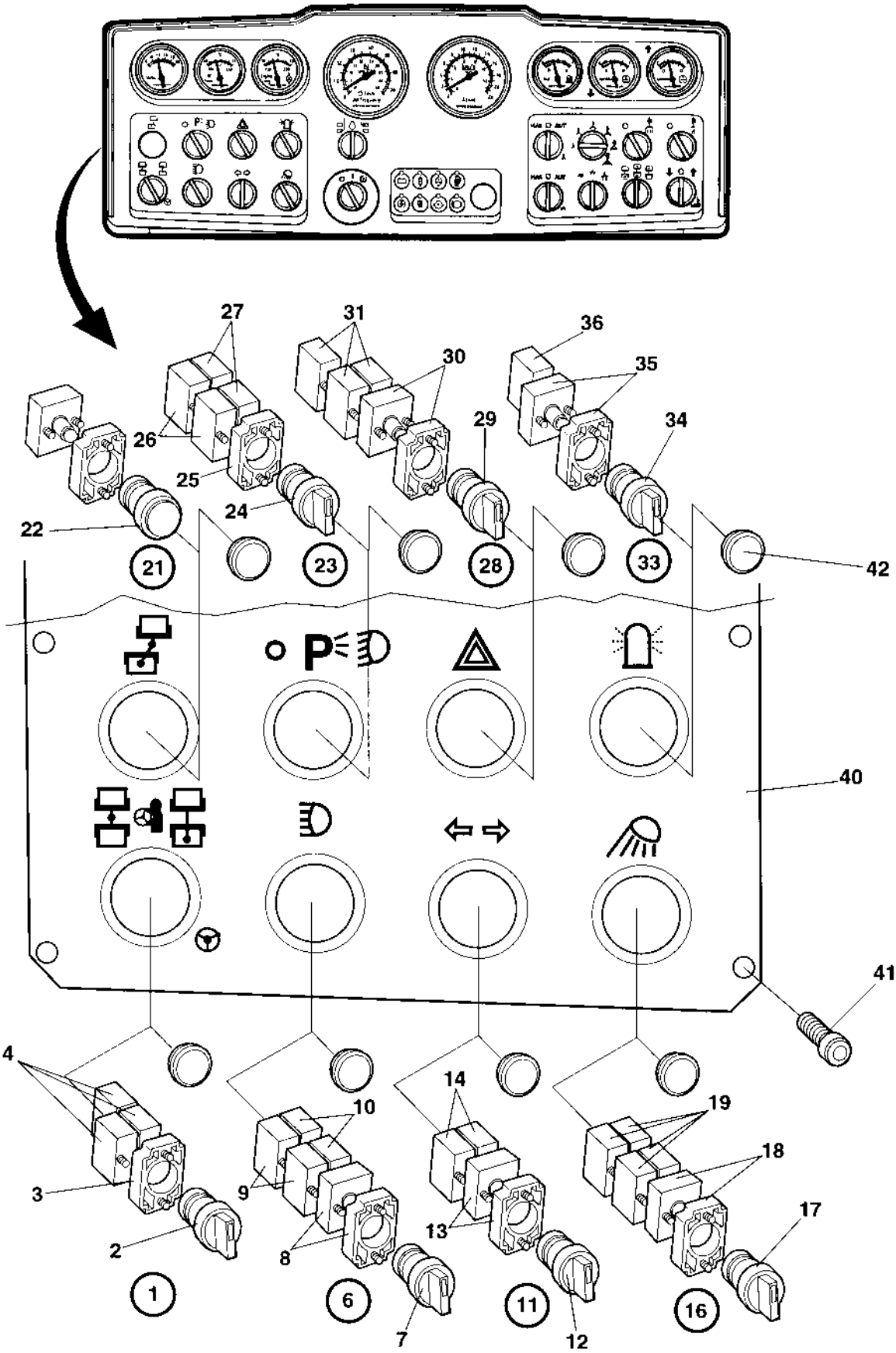

Instrument panel Lower left

Ref. No.	Part No.	Rem.	Qty	Description		Code
1			1	Switch, cpl	Artic/pivot steering	
2	930192	1	1	.Switch		D
	932058	2	1	.Switch		
3	903876		1	.Connector		
4	930163	1	2	.Contact piece, NO		D
	930163	2	3	.Contact piece, NO		D
6			1	Switch, cpl	Main beam	D
7	932057	C	1	Switch		
8	903875		1	.Flange with light		
	985012		1	Bulb		D
9	930154		2	.Contact piece, NC		
10	930163		2	.Contact piece, NO		D
11			1	Switch, cpl	Direction indicator	D
12	930161	E	1	.Switch		D
13	903875		1	.Flange with light		
	985012		1	Bulb		D
14	930163		2	.Contact piece, NO		D
16			1	Switch, cpl	Working light	D
17	930166	O	1	.Switch		D
18	903875		1	.Flange with light		
	985012		1	Bulb		D
19	930163		4	.Contact piece, NO		D
21	932059	G	1	Pilot lamp cpl	Yellow	D
	985012		1	Bulb		D
22	903716		1	.Lamp glass	Yellow	
23			1	Switch, cpl	Parking/dipped beam	
24	932058	I	1	.Switch		
25	903876		1	.Connector		
26	930154		2	.Contact piece, NC		
27	930163		2	.Contact piece, NO		D
28			1	Switch, cpl	Hazard flasher	D
29	932056	K	1	.Switch		D
30	903875		1	.Flange with light		
	985012		1	Bulb		D
31	930163		3	.Contact piece, NO		D
33			1	Switch, cpl	Rotating beacon	D
34	930166	O	1	.Switch		D
35	903875		1	.Flange with light		
	985012		1	Bulb		D
36	930163		1	.Contact piece, NO		D
40	381561		1	Control panel plate		
41	903657		4	Screw		
42	911456	N	N	Hole plug		

1) Two fixed positions.
2) Three fixed positions.
C) Blue
E) Green
G) Drum position
I) Black
K) Red
N) Quantity as required
O) Yellow

Instrument panel Lower right

15707-1

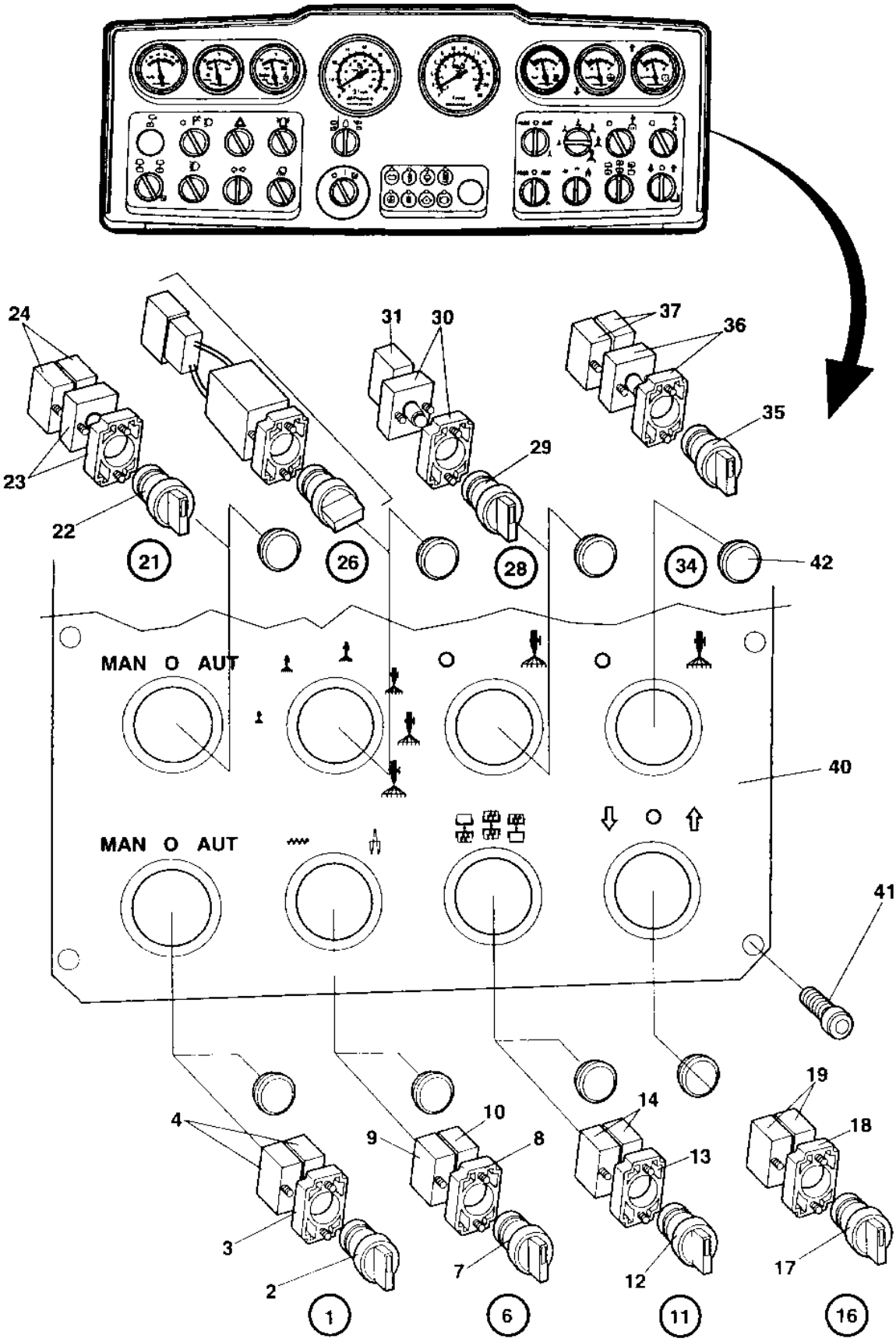

Instrument panel Lower right

Ref. No.	Part No.	Rem.	Qty	Description	Code
1		A	1	Switch, cpl	
2	932058	B	1	.Switch	
3	903876		1	.Connector	
4	930163		2	.Contact piece, NO	D
6		C	1	Switch, cpl	D
7	930192	B	1	.Switch	D
8	903876		1	.Connector	
9	930163		1	.Contact piece, NO	D
10	930154		1	.Contact piece, NC	
11		D	1	Switch, cpl	
12	932058	B	1	.Switch	
13	903876		1	.Connector	
14	930163		2	.Contact piece, NO	D
16		E	1	Switch, cpl	D
17	925713	B	1	.Switch	
18	903876		1	.Connector	
19	930163		2	.Contact piece, NO	D
21		F	1	Switch, cpl	D
22	926989	G	1	.Switch	
23	903875		1	.Flange with light	
	985012		1	.Bulb	D
24	930163		2	.Contact piece, NO	D
26	370644	H	1	Switch, cpl	
28		I	1	Switch, cpl	
29	932057	G	1	Switch	
30	903875		1	.Flange with light	
	985012		1	.Bulb	D
31	930163		1	.Contact piece, NO	D
34		J	1	Switch, cpl	D
35	932057	G	1	.Switch	
36	903875		1	.Flange with light	
	985012		1	.Bulb	D
37	930163		2	.Contact piece, NO	D
40	373582		1	Control panel plate	
41	903657		4	Screw	
42	911456		8	Hole plug	

A) Vibration manual/automatic
B) Black
C) Amplitude selector
D) Vibration selector
E) Edge cut. up/down
F) Sprinkler manual/automatic
G) Blue
H) Sprinkler timer, used together with relay PN374213
I) Sprinkler tyres
J) Sprinkler edge cut.

Instrument panel Relay, fuses

18468

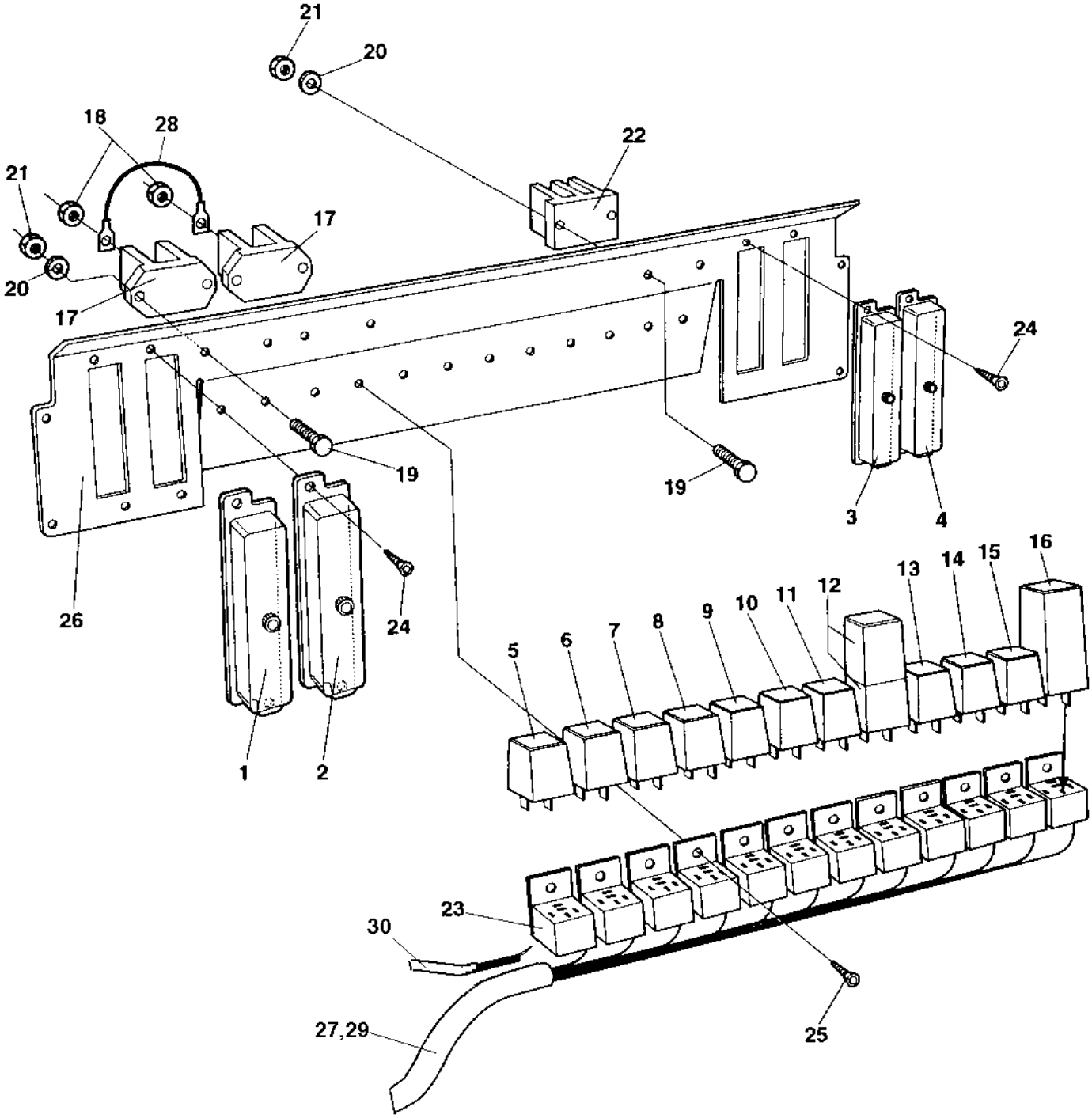

Instrument panel Relay, fuses

Ref. No.	Part No.	Rem.	Qty	Description		Code
1	901256	A	1	Fuse box		
	908110		1	.Cover		
	901224	B	N	Fuse	3A	D
	901225	B	N	Fuse	5A	B
	901226	B	N	Fuse	7.5A	
	901227	B	N	Fuse	10A	B
	901228	B	N	Fuse	15A	
	903741	B	N	Fuse	20A Yellow Medium	B
	901229	B	N	Fuse	25A	B
2	901256		1	Fuse box		
	901240		1	Connector		
3	901256		1	Fuse box		
4	901256		1	Fuse box		
5	393981		1	Frequency converter		
6	287597	C	1	Relay		D
7	904989	D	1	Flash relay	Option	D
8	287597	E	1	Relay		D
9	287597	F	1	Relay		D
10	287597	G	1	Relay		D
11	287598	I	1	Relay	12V-30A	
12	287597	J	1	Relay		D
	374213	K	1	Time relay		D
13	287598	L	1	Relay	12V-30A	
14	287597	M	1	Relay		D
15	903956	N	1	Relay		D
16	382782		1	Relay, VBS		D
17	392930		2	Junction box		
18	570004		2	Nut	M6	
19	503016		6	Screw		
20	600002		6	Washer		
21	923976		6	Nut		
22	903625		1	Junction block		
23		P	12	Relay holder		
24	901767		8	Screw	ST3,5x9,5 Black	
25	902223		12	Screw		
26		1	1	Plate		
27	378135		1	Cable harness		
28	903970		1	Cable		
29	378694		1	Cable harness		
30	392492		1	Cable harness		

1) See section " Instrument box "
A) Without fuses
B) As required
C) Main, lights
D) Direction indicator
E) Brake light
F) Reversing alarm
G) Fuel level
I) Horn
J) Sprinkler
K) Sprinkler, timer, used together with timer switch PN370644
L) Main
M) AVC
N) Neutral start
P) In cable harnesses

Emergency stop panel

15704-3

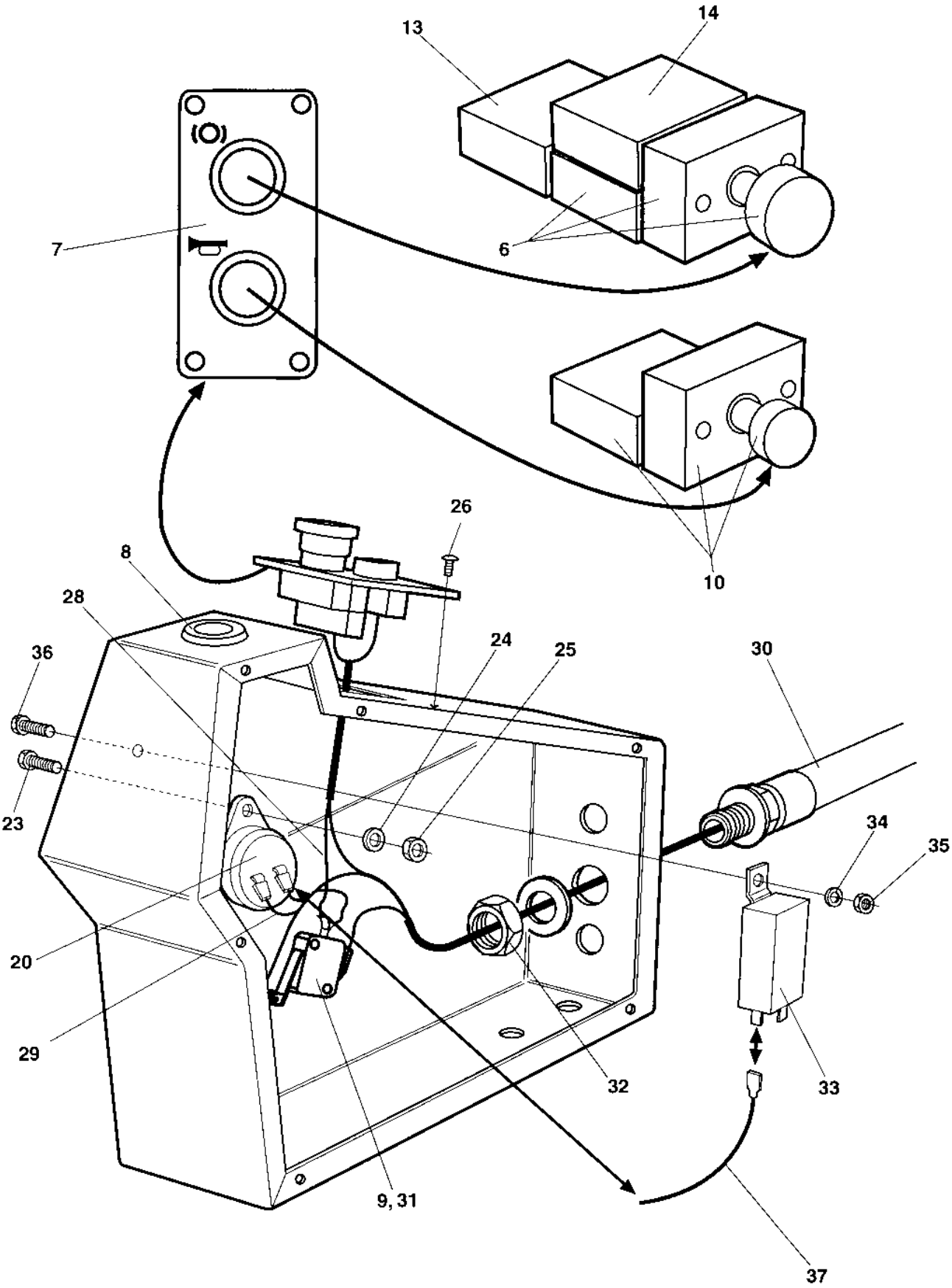

Emergency stop panel

Ref. No.	Part No.	Rem.	Qty	Description		Code
6	930200		1	Emergency stop		
	930154		1	.Contact piece, NC		
7	359941		1	Control panel plate		
8	911456		1	Hole plug		
9	902528		1	Micro switch		
10	932032	A	1	Push button		
	930163		1	.Contact piece, NO		D
13	930154		1	Contact piece, NC		
14	930163		1	Contact piece, NO		D
20	355301		1	Buzzer		D
23	500086		1	Screw		
24	904698		1	Washer		
25	570002		1	Nut	M4	
26	904206		4	Screw	M6X16	
28	904597		1	Cable		
29	960792		1	Cable		
30	376395		1	Cable harness		
31	900528		2	Screw		
32	791253		1	Nut		
33	904704	B	1	Relay		
34	904228	B	1	Washer		
35	586002	B	1	Lock nut	M6	
36	904206	B	1	Screw	M6X16	
37	380708	B	1	Cable harness		

A) Horn
B) Interlock, Option

Driving lights Direction & licenseplate light

17044

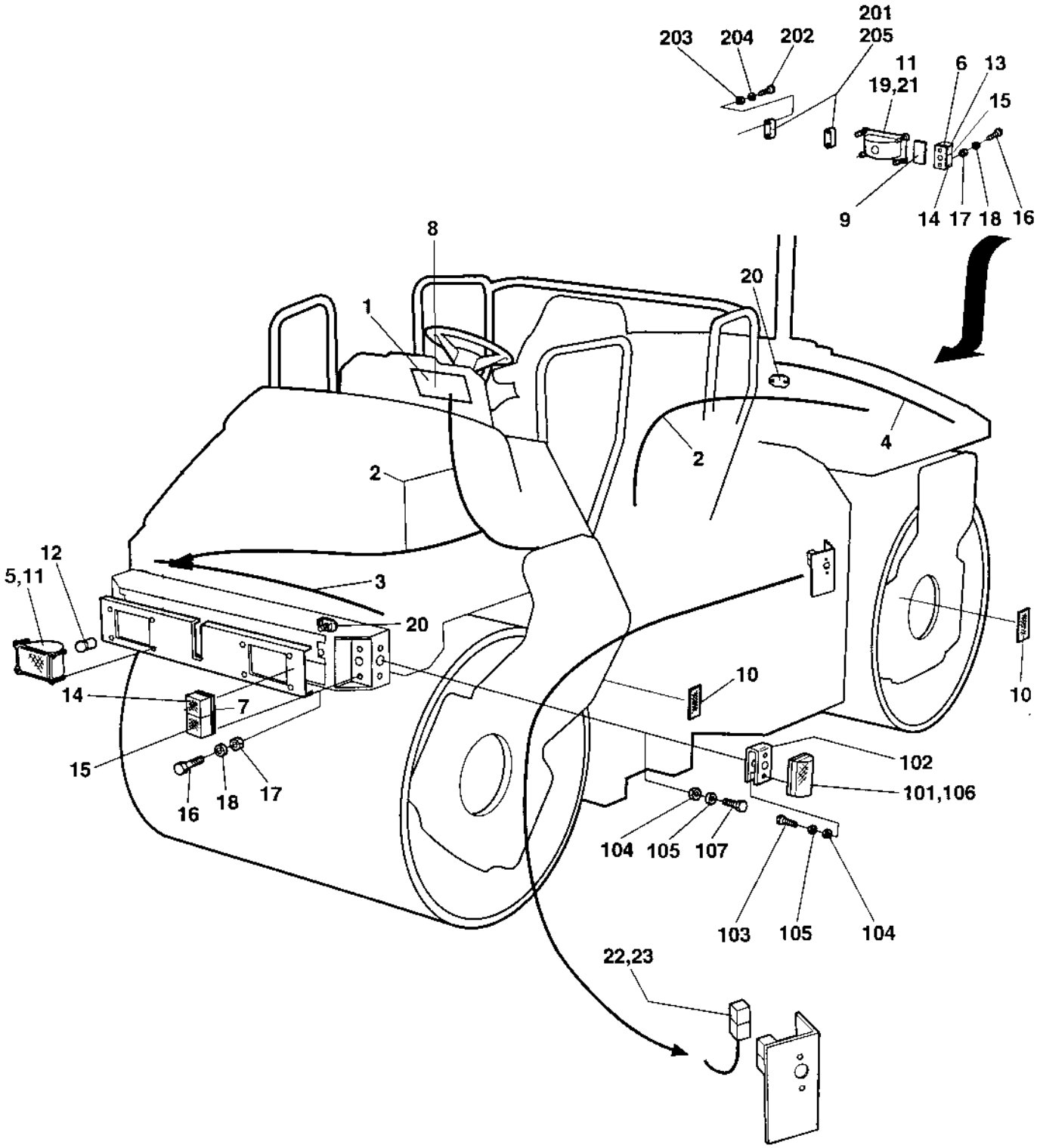

Driving lights Direction & licenseplate light

Ref. No.	Part No.	Rem.	Qty	Description		Code
			1	Driving lights		
1			1	Instrument panel (Page 136)	Lower left	
2	376178		1	Cable harness		
3	376179		1	Cable harness		
4	376180		1	Cable harness		
5	902066	A	2	Headlight		
	904313	B	2	Headlight		
6	904317	C,F	1	Direction lamp		
	937108		1	.Lamp glass		
	904318	C,G	1	Direction lamp		
	937109		1	.Lamp glass		
7	904315	D,H	1	Direction lamp		
	937106		1	.Lamp glass		
	904316	D,I	1	Direction lamp		
	937107		1	.Lamp glass		
8	385264		1	Cable harness		
9	901182		2	Reflector, red		B
10	901183		4	Reflector, yellow		B
11	791389		8	Drive screw		
12	900790		2	Bulb	60/55w H4	B
13	928502		2	Bulb	21w	B
14	928502		4	Bulb	21w	B
15	985014		4	Bulb	5w	B
16	533030		8	Screw		
17	586001		8	Lock nut	M5	
18	601001		8	Washer		
19	902227		2	Work light		
20	392930		2	Junction box		
21	901369		2	Bulb	55w H3	B
22	904032	E	1	Fuse holder		
23	904039		1	Fuse	50A Red High	D
101	902064		2	Direction lights		
102	371185		2	Bracket		
103	926611		4	Screw		
104	586001		8	Lock nut	M5	
105	904281		8	Washer	5,3x10x1	
106	985013		2	Bulb	12V,5W	B
107	500006		4	Screw	M5x16	
201	929455		2	Licence plate light		
202	533038		4	Screw		
203	586002		4	Lock nut	M6	
204	904228		4	Washer		
205	985013		2	Bulb	12V,5W	B

A) Right asym
B) Left asym
C) Yellow/red
D) Yellow/white
E) Incl in item 2
F) Rear, left
G) Rear, right
H) Front, left
I) Front, right

Working lights with/without Rops

16970

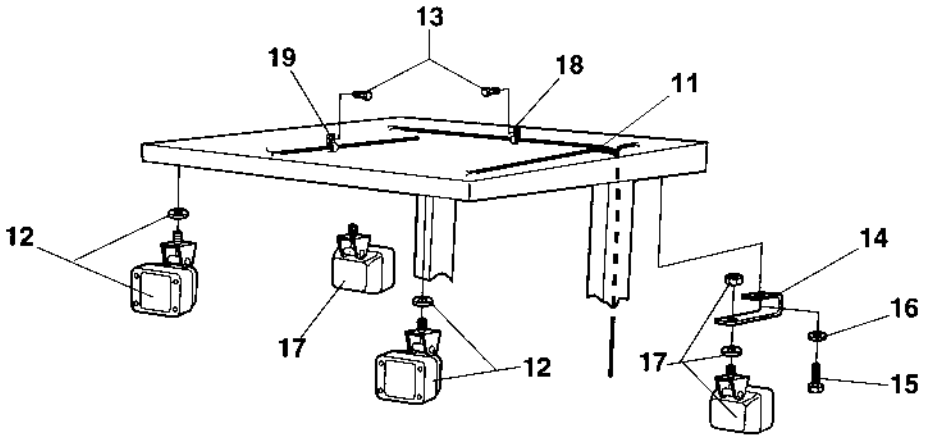

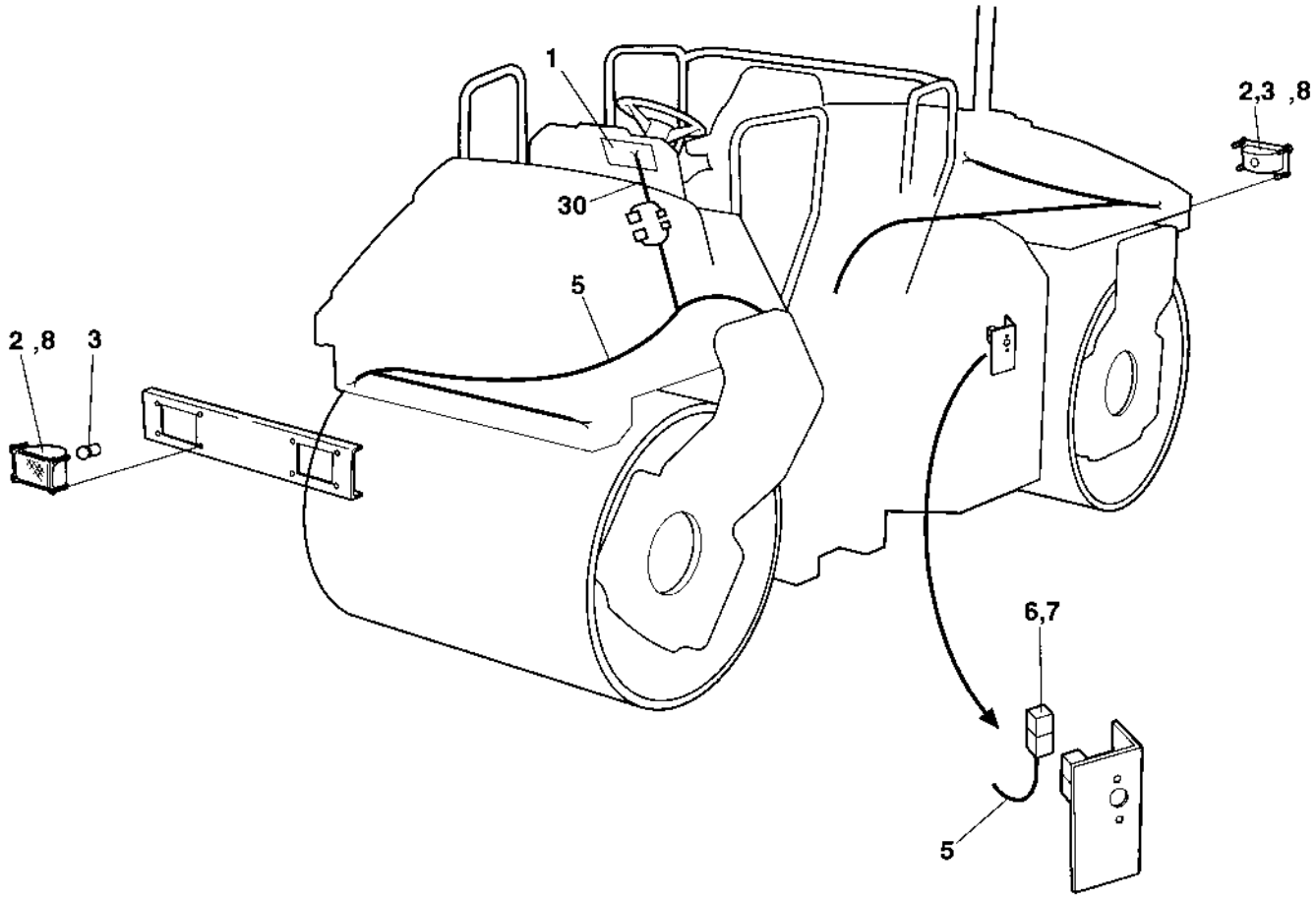

Working lights with/without Rops

Ref. No.	Part No.	Rem.	Qty	Description		Code
				Working light		B
1			1	.Control panel		B
2	902227		4	.Work light		
3	901369		4	.Bulb	55w H3	B
5	376182		1	.Cable harness		
6	904032		1	..Fuse holder		
7	904038		1	.Fuse	40A	D
8	791389		8	.Drive screw		
				Working light, rops		
11	376187		1	.Cable harness		
12	904314		2	.Work lamp		
13	541702		11	.Screw	M6x12	
14	376466		2	.Bracket		
15	500021		2	.Screw	M8-1,25x25 8.8	
16	904229		2	.Washer		
17	904314		2	.Work lamp		
18	921031		5	.Clamp		
19	921039		6	.Pipe clamp		
30	385264		1	Cable harness		

Protecting cover, Headlight

17080

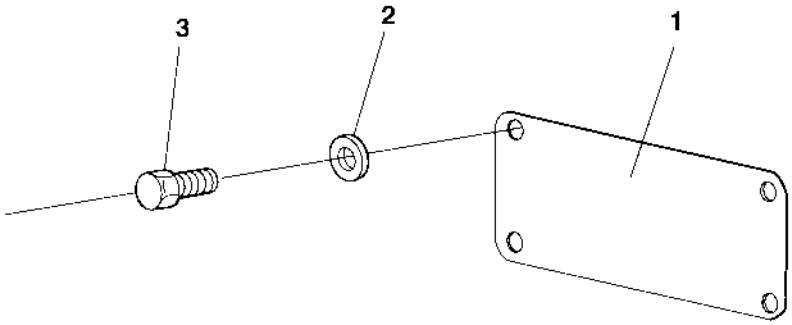

Protecting cover, Headlight

Ref. No.	Part No.	Rem.	Qty	Description		Code
1	374756		1	Protecting cover		
2	904281		4	Washer	5,3x10x1	
3	791916		4	Screw		

Working lights, cab

17642

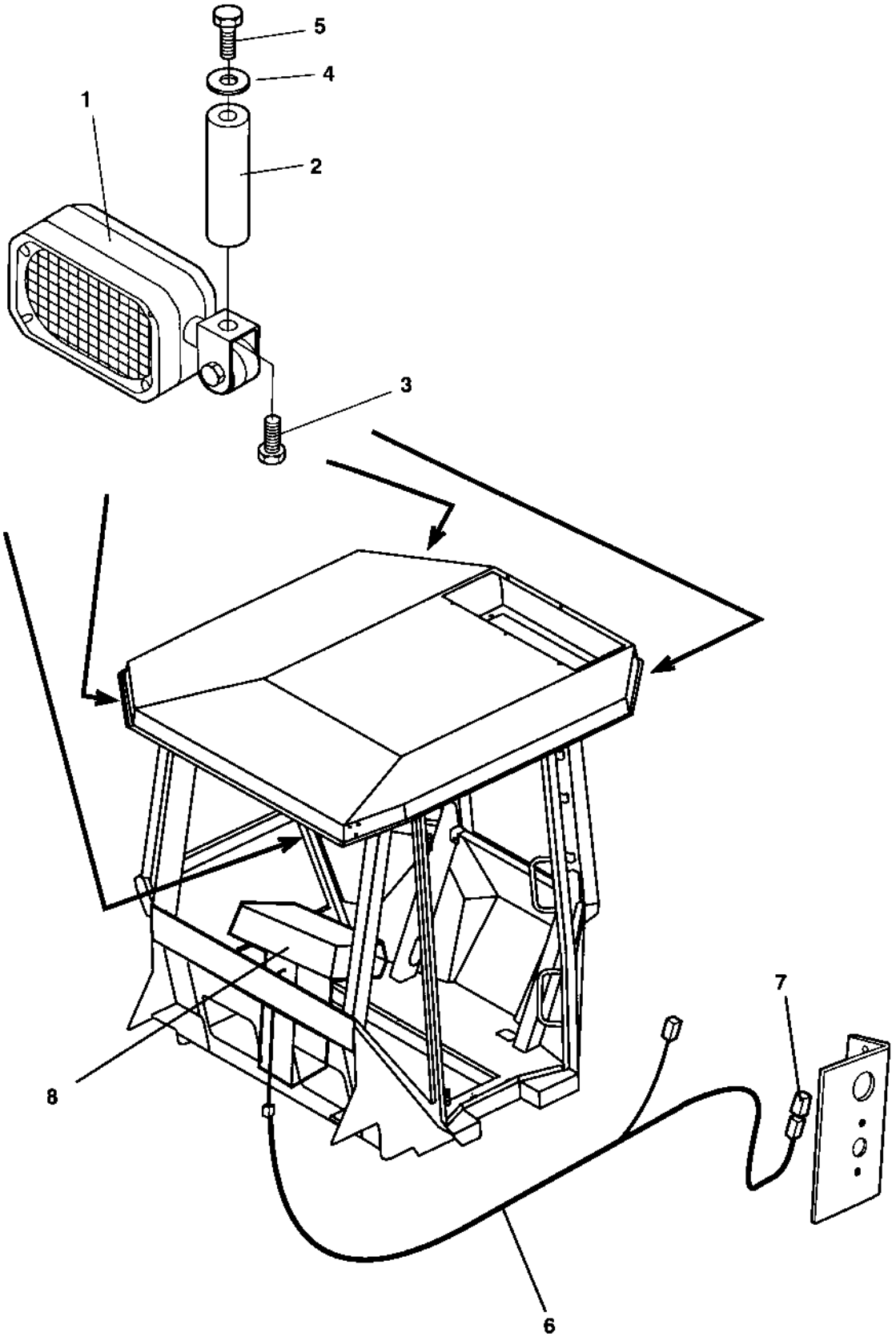

Working lights, cab

Ref. No.	Part No.	Rem.	Qty	Description		Code
1	908267		4	Working light		D
2	908359		4	Distance		
3	500019		4	Screw		
4	904229		4	Washer		
5	500019		4	Screw		
6	376175	1	1	Cable harness		
7	904037	1	1	Fuse	30A	D
8				Control panel		D

1) When no driving lights.

Rotating beacon

15827

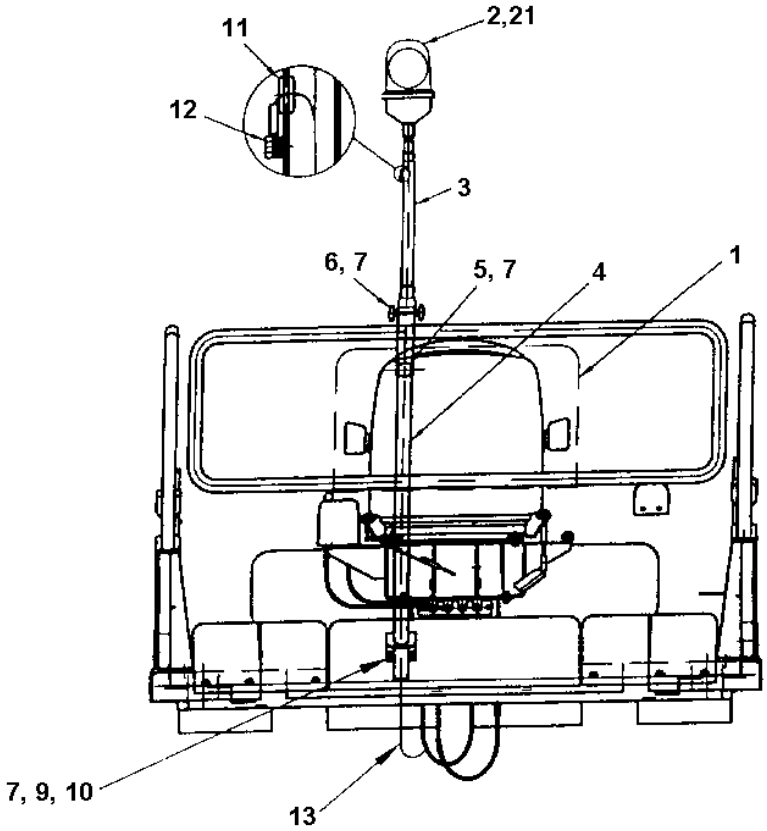

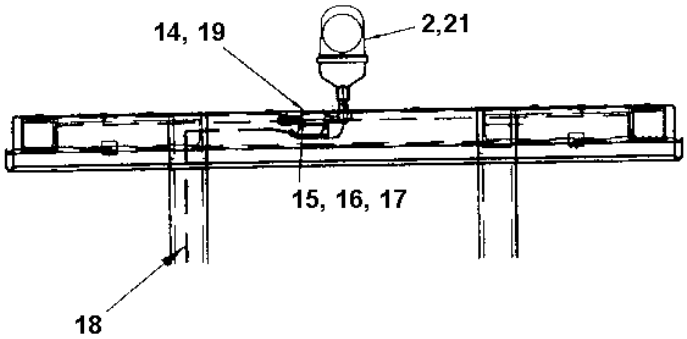

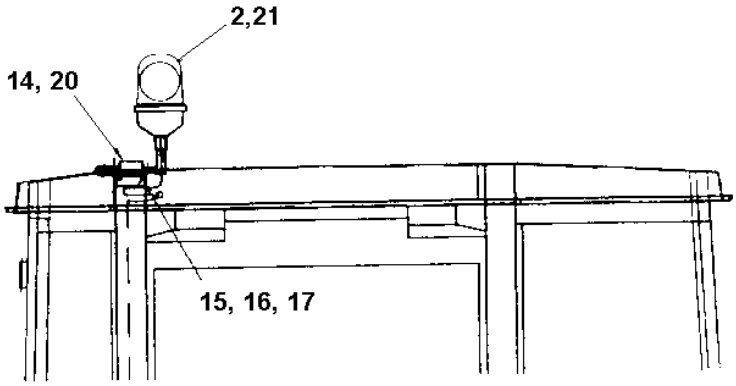

Rotating beacon

Ref. No.	Part No.	Rem.	Qty	Description		Code
				Std, rops, cab, cab with AC		D
1			1	Instrument panel (Page 136)	Lower left	
2	389577	A	1	Rotating beacon		D
3	371017	B	1	Lamp holder		
4	371016	C	1	Lamp holder		
5	371058		1	Nut		
6	371665		2	Hand knob		
7	904229		7	Washer		
	904229	1	2	Washer		
9	500021		4	Screw	M8-1,25x25 8.8	
	500021	1	2	Screw	M8-1,25x25 8.8	
10	570005		4	Nut	M8	
11	909152		1	Rubber grommet		
12	500044		1	Screw	M6x8	
13	376184		1	Cable harness		
14	358452	2	1	Lamp holder		
15	500021	2	2	Screw	M8-1,25x25 8.8	
16	586003	2	2	Lock nut	M8	
17	904229	2	2	Washer		
18	376184	3	1	Cable harness		
19	372674	3	1	Spacer		
20	371364	D	1	Lamp holder		

1) For machines with Cab.
2) For machines with Rops or Cab.
3) For machines with Rops.
A) Orange
B) Upper
C) Lower
D) Cab with AC

Tachograph

18466

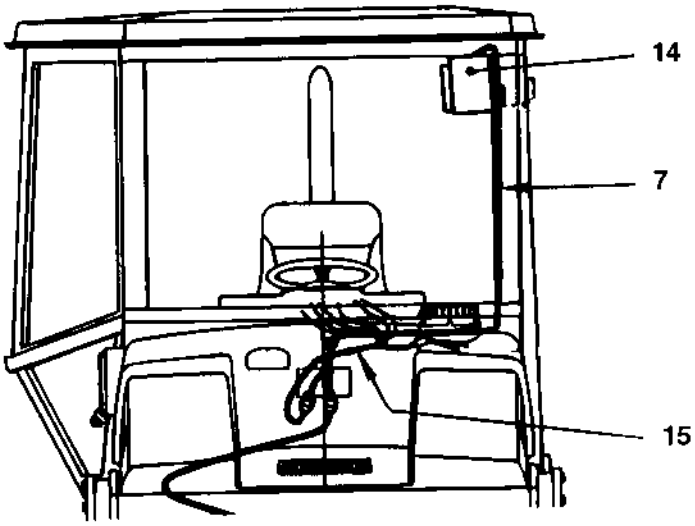

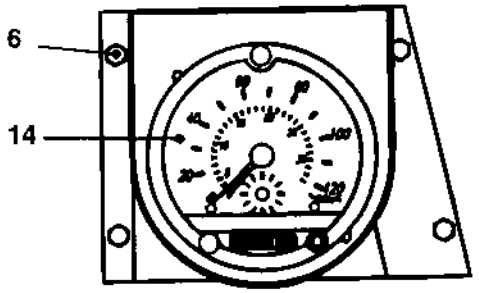

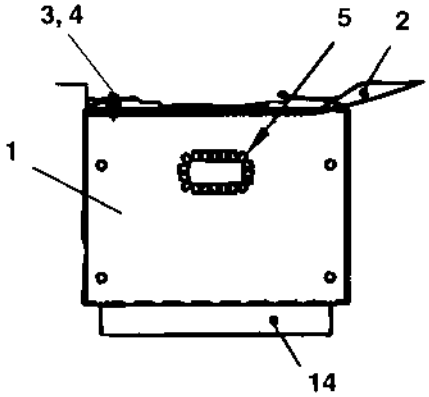

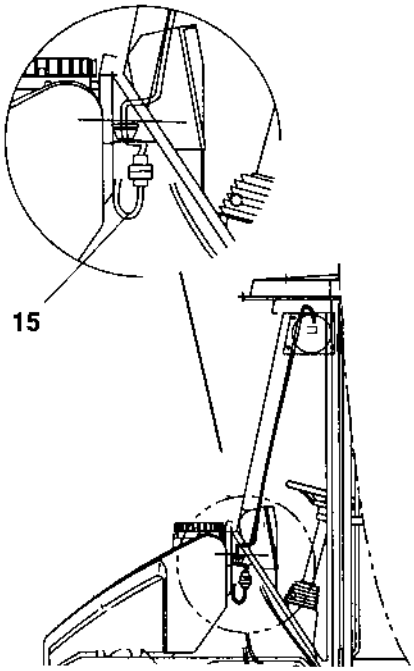

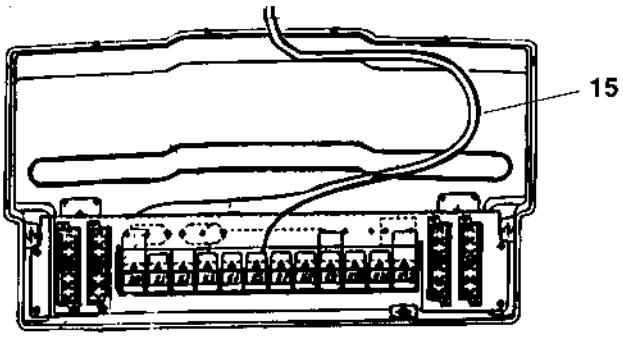

Tachograph

Ref. No.	Part No.	Rem.	Qty	Description		Code
1	371885		1	Instrument box		
2	370425		1	Support		
3	586002		2	Lock nut	M6	
4	928381		2	Washer	6,4x18x1,6	
5	900904	A	1XL	Grommet		
6	541703		4	Screw	M6x16	
7	385406		1	Cable harness		
14	901209		1	Tachograph		
15	392567		1	Cable harness		

A) L=200 mm

Offset drum Electrical equipment

18243

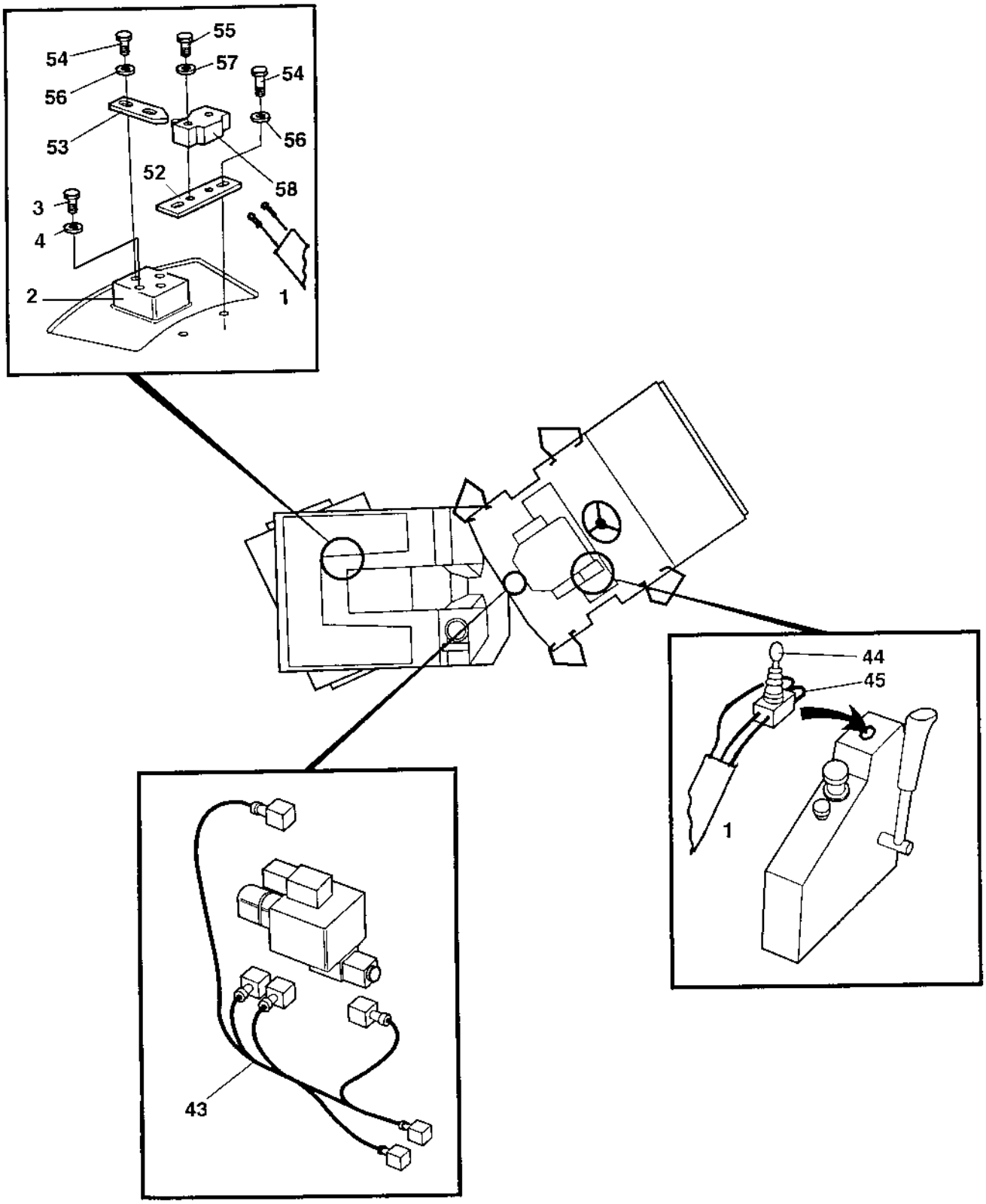

Offset drum Electrical equipment

Ref. No.	Part No.	Rem.	Qty	Description		Code
1		A		Cable harness		
2	377514	B	1	Bracket		
3	508056		2	Screw	M8x40	
4	904229		2	Washer		
43	381556		1	Cable harness		
44	903582		1	Joystick		
45	343550		2	Connection cable		
52	359775		1	Holder plate		
53	359776		1	Cam		
54	500040		4	Screw	M6-1x20 8,8	
55	533050		2	Screw		
56	904228		4	Washer		
57	904697		2	Washer	3,2x6x0,5	
58	930046		1	Micro switch		D

A) Existing
B) Welded on earlier machines.

Drivers platform

Ref. No.	Part No.	Rem.	Qty	Description		Code
10				Drivers platform (Page 160)		
15				Drivers platform (Page 162)	For cab	
20				Drivers seat, turn-over (Page 164)		
25				Drivers seat, turn-over in cab (Page 166)		
30	391163			Steering column (Page 168)		C
35				Cross sliding (Page 170)	Controls	
40				Cross sliding (Page 172)	Carrier	
50				Forward and reverse control (Page 174)		
52				Speed limiter (Page 176)	Option	
60				Engine controls Up to 61812399 (Page 178)		
				Engine controls From 61812400 (Page 180)		
80				Rear mirror (Page 182)		
90				Rops and fops (Page 184)	With seat belt	
95				Canopy (Page 186)		
99				Cab, asymmetric (Page 188)		
100				Cab, symmetric (Page 210)		
105				Cab, equipment (Page 218)		
110				Cab, water tank wipers (Page 220)		
115				Exterior rear mirrors (Page 222)		
120				Radio and cassette/cd player (Page 224)		

Drivers platform

17943

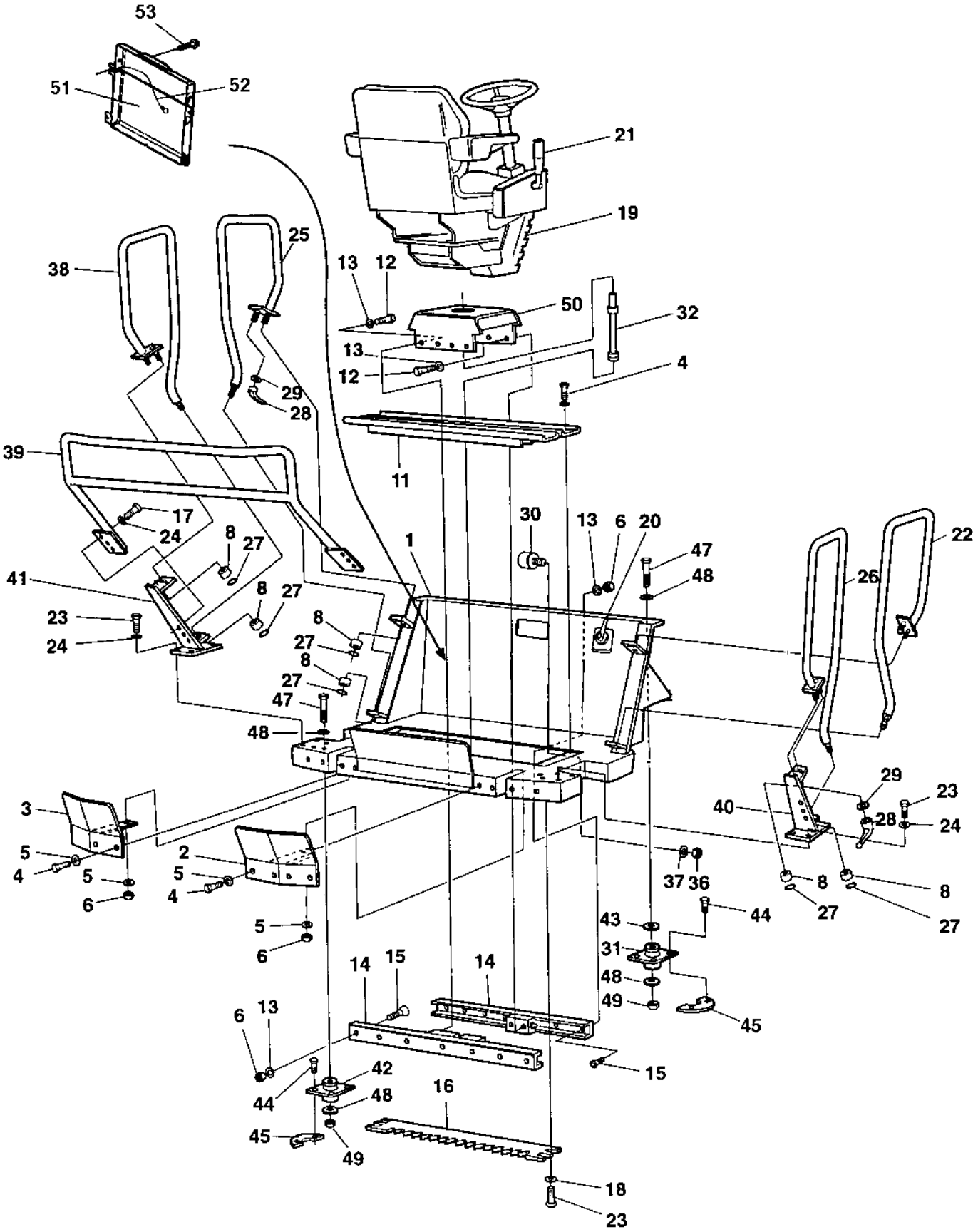

Drivers platform

Ref. No.	Part No.	Rem.	Qty	Description		Code
1	370175		1	Platform		
2	370275	A	1	Operator protection		
3	370276	B	1	Operator protection		
4	500019		14	Screw		
5	904229		16	Washer		
6	570005		15	Nut	M8	
8	370375		8	Bushing		
11	370278		2	Cover		
12	500021		6	Screw	M8-1,25x25 8.8	
13	603019		19	Washer		
14	359418	C	1	Linear bearing		
15	513013		13	Screw		
16	359885		1	Locking rail		
17	500028		6	Screw	M10-1,5x25 8,8	
18	603023		4	Washer	M10,5x22x4	
19			1	Drivers seat, turn-over (Page 164)		
20			1	Engine controls Up to 61812399 (Page 178)		
			1	Engine controls From 61812400 (Page 180)		
21			1	Forward and reverse control (Page 174)		
22	372091	D	1	Hand rail, right		
23	500029		12	Screw	M10-1,5x30 8.8	
24	904230		14	Washer	10,5X22X2	
25	372092	D	1	Hand rail, left		
26	372093	F	1	Hand rail, right		
27	603009		4	Washer		
28	370160		4	Locking lever		
29	370286		4	Washer		
30	359887	H	2	Shock absorber		
31	370255	D	2	Shock absorber		D
32	370287		1	Shaft		
35	500075		6	Screw	M6-1,0x25 8.8	
36	570004		2	Nut	M6	
37	904228		2	Washer		
38	372094	F	1	Hand rail, left		
39	370289	F	1	Hand rail		
40	370294	A	1	Holder		
41	370298	B	1	Holder		
42	370254	F	2	Shock absorber		D
43	370258		2	Spacer washer		
44	500037		16	Screw	M12-1,75x35 8,8	
45	372704		8	Holder		
47	500228		4	Screw	M20-2,5x120 8,8	
48	600014		8	Washer		
49	586022		4	Lock nut	M20-8	
50			1	Cross sliding (Page 172)	Carrier	
51	383705		1	Instruction book holder		
52	357643		1	Wire		
53	791226		1	Screw		

A) Right
B) Left
C) One pair
D) Front
F) Rear
H) For carrier stop

Drivers platform For cab

17626

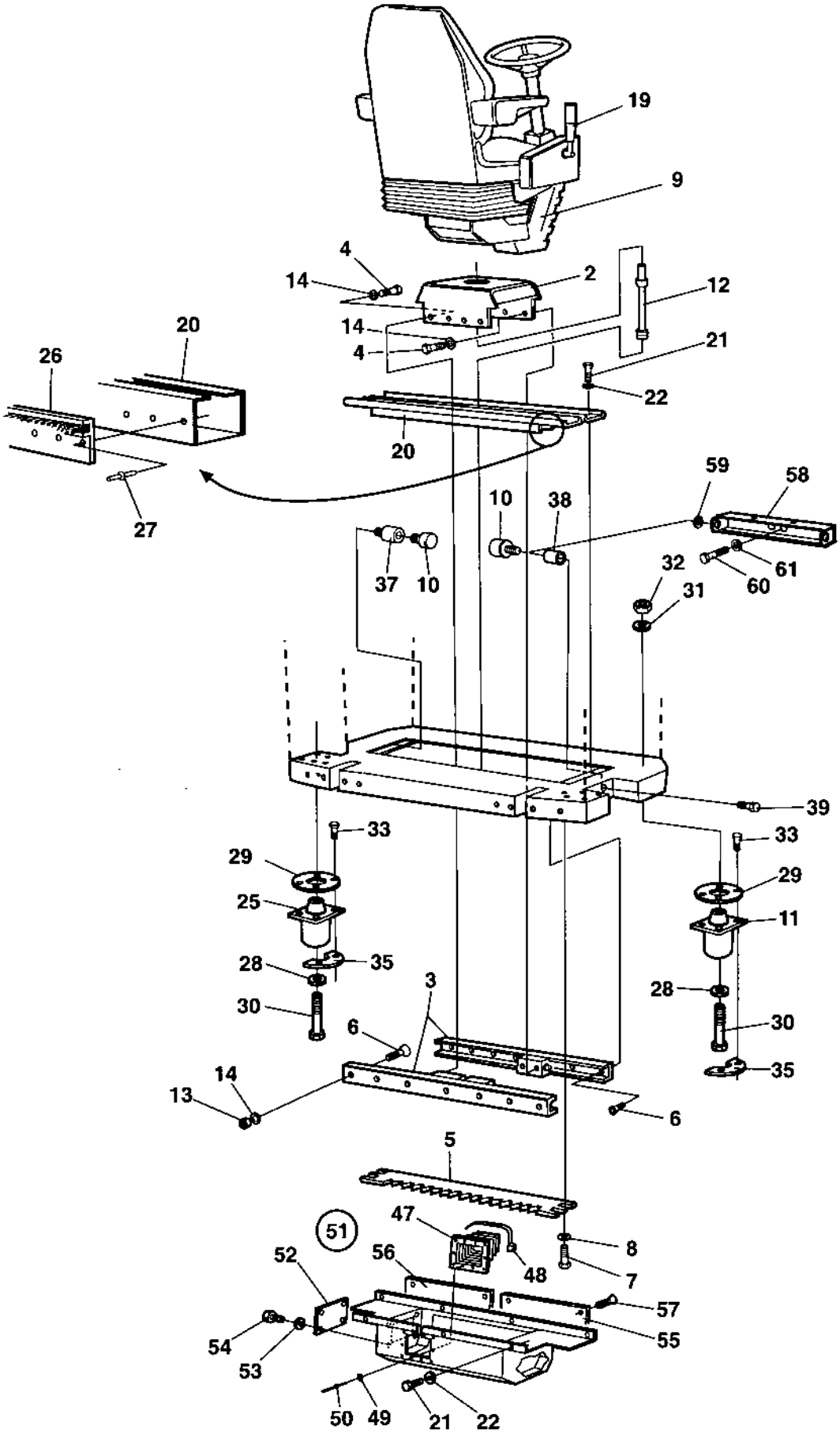

Drivers platform For cab

Ref. No.	Part No.	Rem.	Qty	Description		Code
1			1	Cab, interior		
2			1	Cross sliding (Page 172)	Carrier	
3	359418		1	Linear bearing		
4	500021		6	Screw	M8-1,25x25 8.8	
5	359885		1	Locking rail		
6	513013		13	Screw		
7	500029		4	Screw	M10-1,5x30 8.8	
8	904557		7	Washer	10,5x22x4	
9			1	Drivers seat, turn-over in cab (Page 166)		
10	359887	A	2	Shock absorber		
11	359888		2	Shock absorber	Red	
12	359889		1	Shaft		
13	570005		13	Nut	M8	
14	904556		19	Washer	8,4x16x3,0	
19			1	Forward and reverse control (Page 174)		
20	359892		2	Cover plate		
21	500019		22	Screw		
22	904229		22	Washer		
25	359894		2	Shock absorber		D
26	359895		6	Brush profile		
27	903731		40	Blind rivet		
28	903290		4	Washer	21x36x6	
29	359998		4	Back-up ring		
30	924823		4	Screw	M20-2.5X160	
31	904233		4	Washer	21x36x3	
32	586022		4	Lock nut	M20-8	
33	500194		16	Screw	M12x40H 8.8	
35	372704		8	Holder		
37	370662		1	Spacer		
38	373227	B	1	Spacer		
39	500013		1	Screw	M6-1x16 8,8	
47	371621		1	Bellows		
48	313041		4	Cable ties	L=186 mm	
49	904698		11	Washer		
50	624004		11	Pop rivet		
51	371129		1	Noise suppression box, cpl		
52	371395		1	.Cover		
53	600004		6	.Washer		
54	500012		6	.Screw	M6x12	
55	371396		1	.Cover		
56	371599		1	.Cover		
57	513008		11	.Screw		
58	385932	C	1	Spacer bracket		
59	603009		1	Washer		
60	500047		1	Screw	M8-1,25x35 8,8	
61	904556		1	Washer	8,4x16x3,0	

A) For carrier stop
B) For asymmetric cab.
C) For symmetric cab.

Drivers seat, turn-over

18473

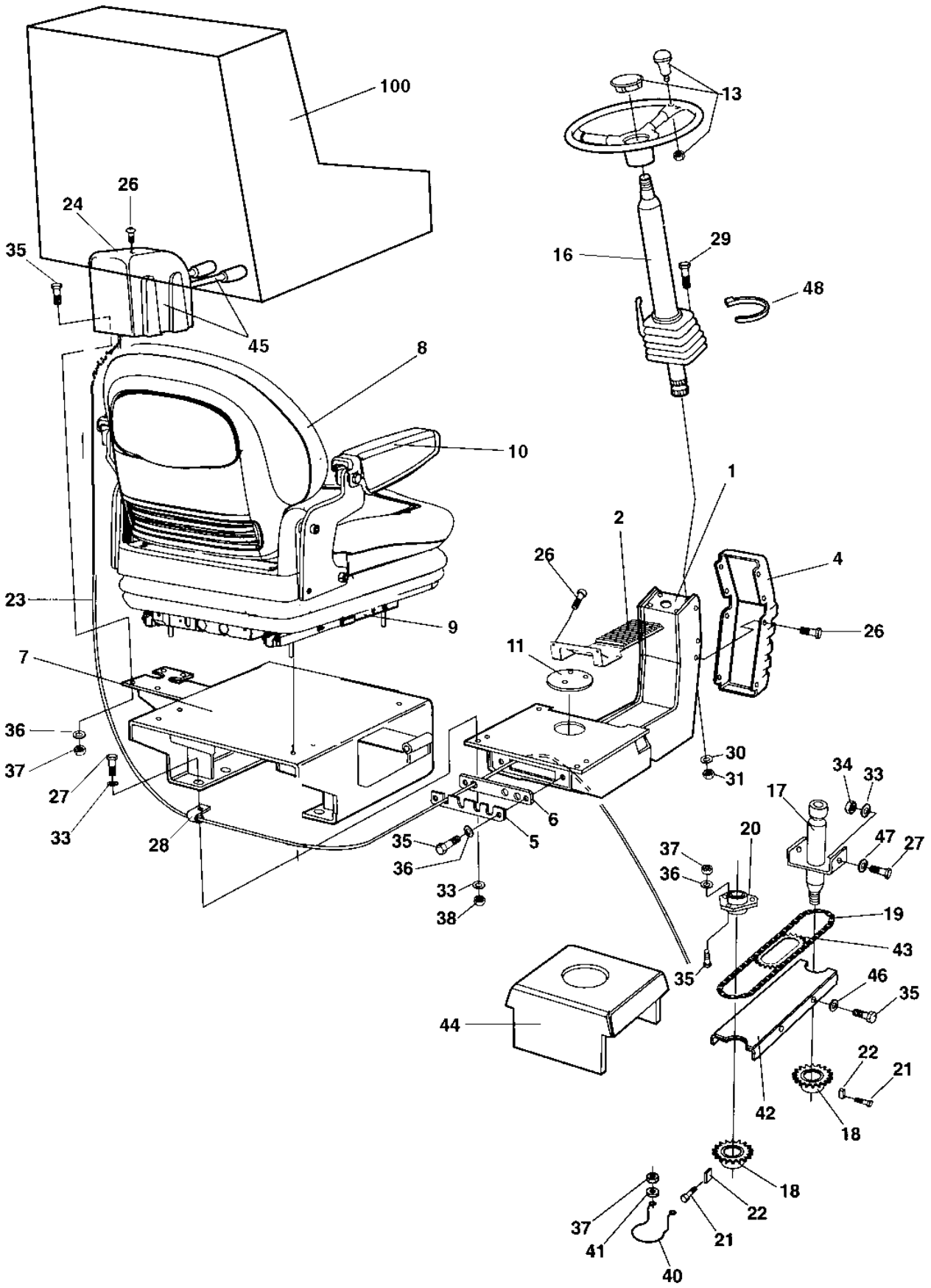

Drivers seat, turn-over

Ref. No.	Part No.	Rem.	Qty	Description		Code
1	359900		1	Seat frame		
2	381400		1	Bearing cover		
4	359574		1	Cover		
5	359914		1	Cover		
6	359915		1	Grommet		
7	391346		1	Seat frame		
8	377518		1	Drivers seat, cpl		
	945622		1	.Seat switch		
9	945661	B	1	.Adjuster kit		D
10	390963		1	Arm rest kit		
11	359920		1	Plug		
13	372964		1	Steering wheel, cpl		
			1	.Steering wheel and knob		
	935614		1	.Turning knob		D
	935613		1	.Cover		
16	391163		1	Steering column (Page 168)		C
17	359919		1	Shaft		
18	359916		2	Chain wheel		D
19	359921		1	Chain		D
20	903917		1	Bearing outer		
	903918		1	Bearing inner		
21	516051		2	Set screw		
22	350009		2	Flat key		D
23			1	Cross sliding (Page 170)	Controls	
24	359419		1	Control cover		
26	904206		16	Screw	M6X16	
27	500021		8	Screw	M8-1,25x25 8.8	
28	921104		2	Clamp		
29	500028		3	Screw	M10-1,5x25 8,8	
30	904557		3	Washer	10,5x22x4	
31	570006		3	Nut	M10	
33	904229		12	Washer		
34	586003		2	Lock nut	M8	
35	500040		10	Screw	M6-1x20 8,8	
36	904228		7	Washer		
37	586002		7	Lock nut	M6	
38	570005		8	Nut	M8	
40	372672		1	Chain guard		
41	603001		2	Washer	TB6,7x14x3	
42	381403		1	Chain supporter		
43				Not used on this model		
44			1	Cross sliding (Page 172)	Carrier	
45			1	Cross sliding (Page 170)	Controls	
46	904735		4	Washer		
47	904231		2	Washer	13x24x2	
48	313041		1	Cable ties	L=186 mm	
100	348331	A	1	Seat cover		D

A) Option
B) Left and right sliding rail

Drivers seat, turn-over in cab

17627-1

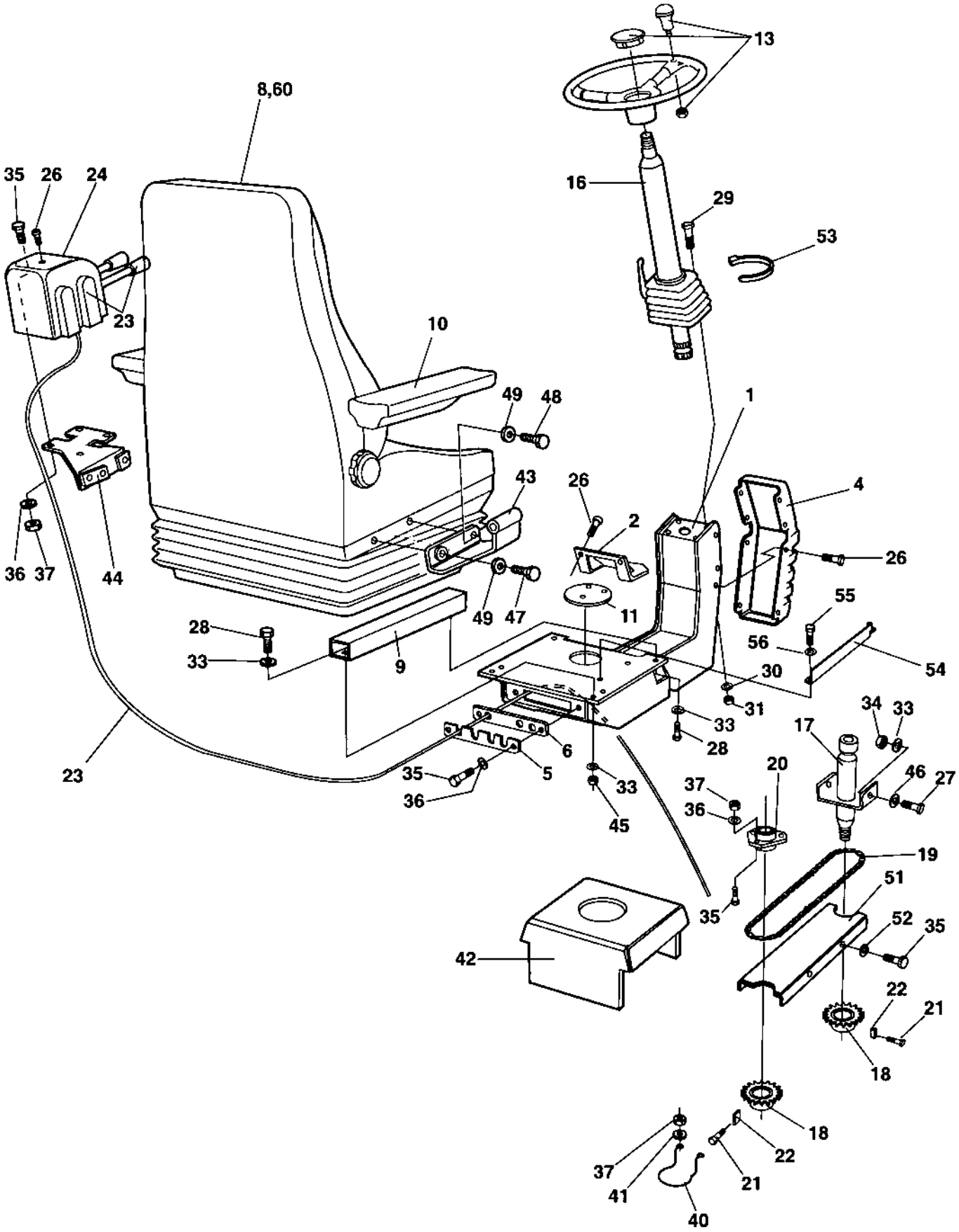

Drivers seat, turn-over in cab

Ref. No.	Part No.	Rem.	Qty	Description		Code
1	359900		1	Seat frame		
2	381400		1	Bearing cover		
4	359574		1	Cover		
5	359914		1	Cover		
6	359915		1	Grommet		
8	359917	A	1	Drivers seat		
	937892		1	.Seat switch		
9		B	1	.Slide rail		
10	937620		1	.Arm rest, right		
	937621		1	.Arm rest, left		
11	359920		1	Plug		
13	372964		1	Steering wheel, cpl		
			1	.Steering wheel and knob		
	935614		1	..Turning knob		D
	935613		1	.Cover		
16	391163		1	Steering column (Page 168)		C
17	359919		1	Shaft		
18	359916		2	Chain wheel		D
19	359921		1	Chain		D
20	903917		1	Bearing outer		
	903918		1	Bearing inner		
21	516051		2	Set screw		
22	350009		2	Flat key		D
23			1	Cross sliding (Page 170)	Controls	
24	359419		1	Control cover		
26	904206		16	Screw	M6X16	
27	500021		2	Screw	M8-1,25x25 8.8	
28	500053		6	Screw	M8-1,25x20 8.8	
29	500028		3	Screw	M10-1,5x25 8,8	
30	904557		3	Washer	10,5x22x4	
31	570006		3	Nut	M10	
33	904229		8	Washer		
34	586003		2	Lock nut	M8	
35	500040		10	Screw	M6-1x20 8,8	
36	904228		7	Washer		
37	586002		7	Lock nut	M6	
40	372672		1	Chain guard		
41	603001		2	Washer	TB6,7x14x3	
42			1	Cross sliding (Page 172)	Carrier	
43	359971		1	Control cable holder		
44	359972		1	Control cable holder		
45	570005		4	Nut	M8	
46	904734		2	Washer	8,4x26x4	
47	903914		2	Screw		
48	500031		2	Screw	M10-1,5x40 8,8	
49	904230		4	Washer	10,5X22X2	
51	381403		1	Chain supporter		
52	904735		4	Washer		
53	313041		1	Cable ties	L=186 mm	
54	386128		1	Stop		
55	541703		2	Screw	M6x16	
56	904228		4	Washer		
60	383200	C	1	Seat belt	3"	

A) With seat belt
B) One pair
C) Option, 3"

391163 Steering column

18412

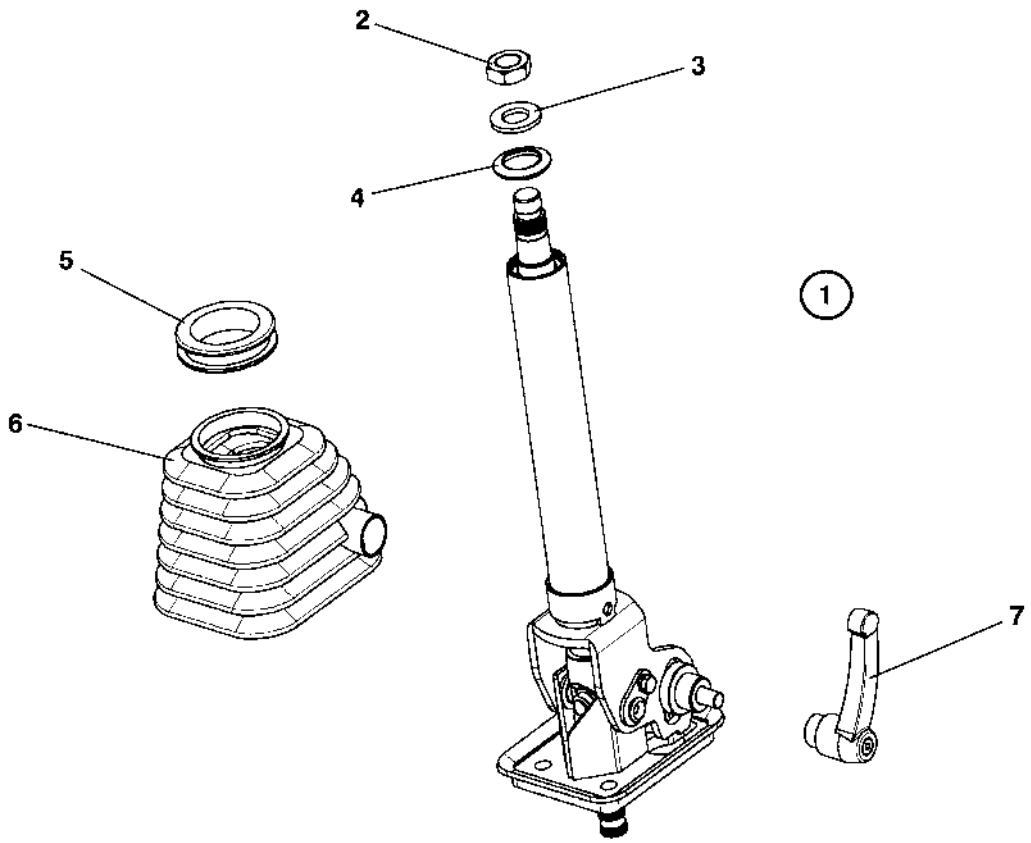

391163 Steering column

Ref. No.	Part No.	Rem.	Qty	Description	Code
1				Steering column, cpl	
2	945632		1	.Nut	
3	945633		1	.Washer	
4	945634		1	.Rubber cap	
5	945635		1	.Bellows ring	
6	945636		1	.Bellows	
7	945637		1	.Locking handle	

Cross sliding Controls

16119-1

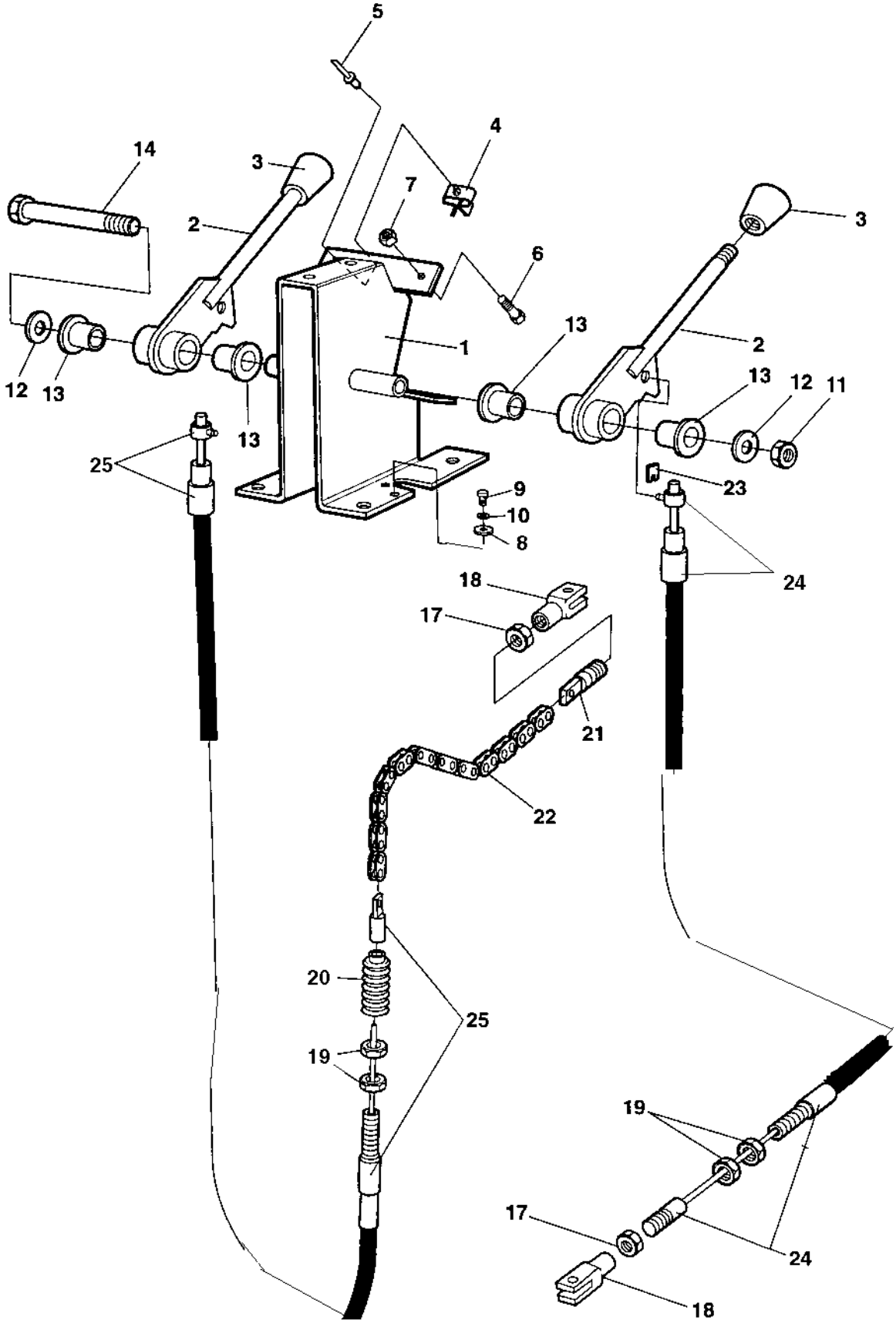

Cross sliding Controls

Ref. No.	Part No.	Rem.	Qty	Description	Code
1	935771		1	Framing	
2	909745		2	Lever	
3	908190		2	Ball knob	
4	908189		1	Lever lock	
5			1	Rivet	
6	500001		1	Screw	
7	923976		1	Nut	
8	909746		2	Washer	
9	533024		2	Screw	
10	615041		2	Washer	5,3x11
11	586002		1	Lock nut	M6
12	928381		2	Washer	6,4x18x1,6
13	908187		4	Plain bearing	
14	500169		1	Screw	
17	570004	A	2	Nut	M6
18	416004	A	2	Fork	
19	927233	B	4	Nut	
20	908184	C	1	Protection bellow	
21	359822		1	Spring holder	
22	359924		1	Chain with links	
23	937958	B	1	Clips	
24	935773	D	1	Cable, cpl	
25	935772	E	1	Cable, cpl	

A) Incl in item 24
B) Incl in item 24,25
C) Incl in item 25
D) Sliding
E) Turning

Cross sliding Carrier

17245

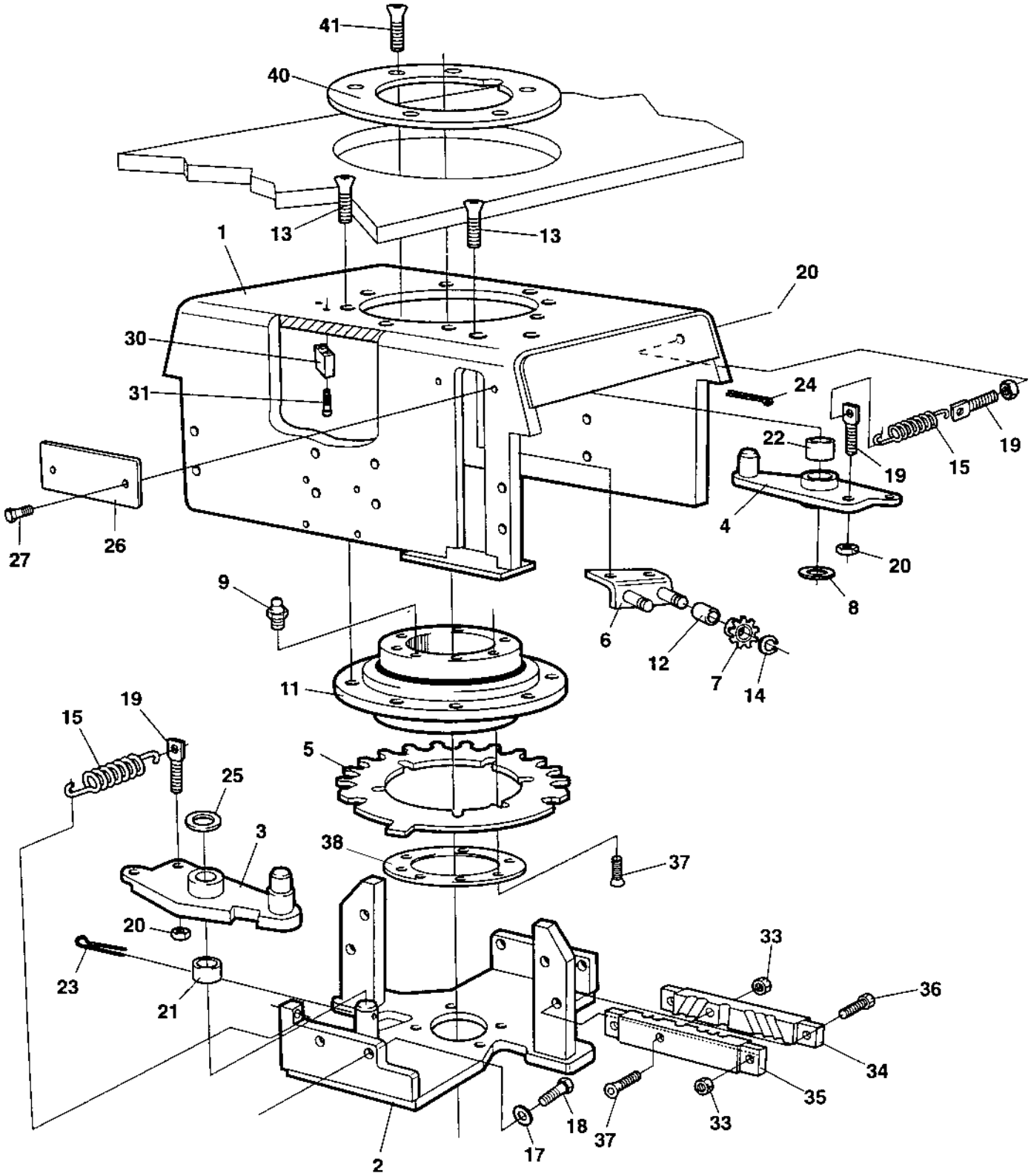

Cross sliding Carrier

Ref. No.	Part No.	Rem.	Qty	Description		Code
1	359788		1	Carrier		
2	359733		1	Bracket		
3	371101	A	1	Coupling link		
4	374417	B	1	Coupling link		
5	370955		1	Locking disc		
6	359810		1	Control bracket		
7	359813		2	Chain wheel		
8	904231		1	Washer	13x24x2	
9	926214		1	Grease fitting		D
11	359125		1	Ball bearing		
12	359816		2	Bushing		
13	513003		10	Screw		
14	359817		2	Retaining ring		
15	359043		2	Spring		D
17	904556		10	Washer	8,4x16x3,0	
18	500021		4	Screw	M8-1,25x25 8.8	
19	359818		3	Spring collar		
20	573008		3	Nut	M8	
21	359819		1	Bushing		
22	359820		1	Bushing		
23	630008	A	1	Pin		D
24	630035	B	1	Split pin		D
25	904232		1	Washer	17x30x3	
26	359815		1	Cover		
27	926220		2	Screw		
30	359893	C	1	Stop		
31	508056	C	2	Screw	M8x40	
33	570005		5	Nut	M8	
34	372960		1	Clamp		
35	372959		1	Clamp		
36	500022		4	Screw	M8-1,25x30 8,8	
37	902520		7	Screw		
38	372966		1	Lock ring		
40	372965		1	Lock ring		
41	902520		6	Screw		

A) For sliding
B) For turning
C) Only cab

Forward and reverse control

16126-1

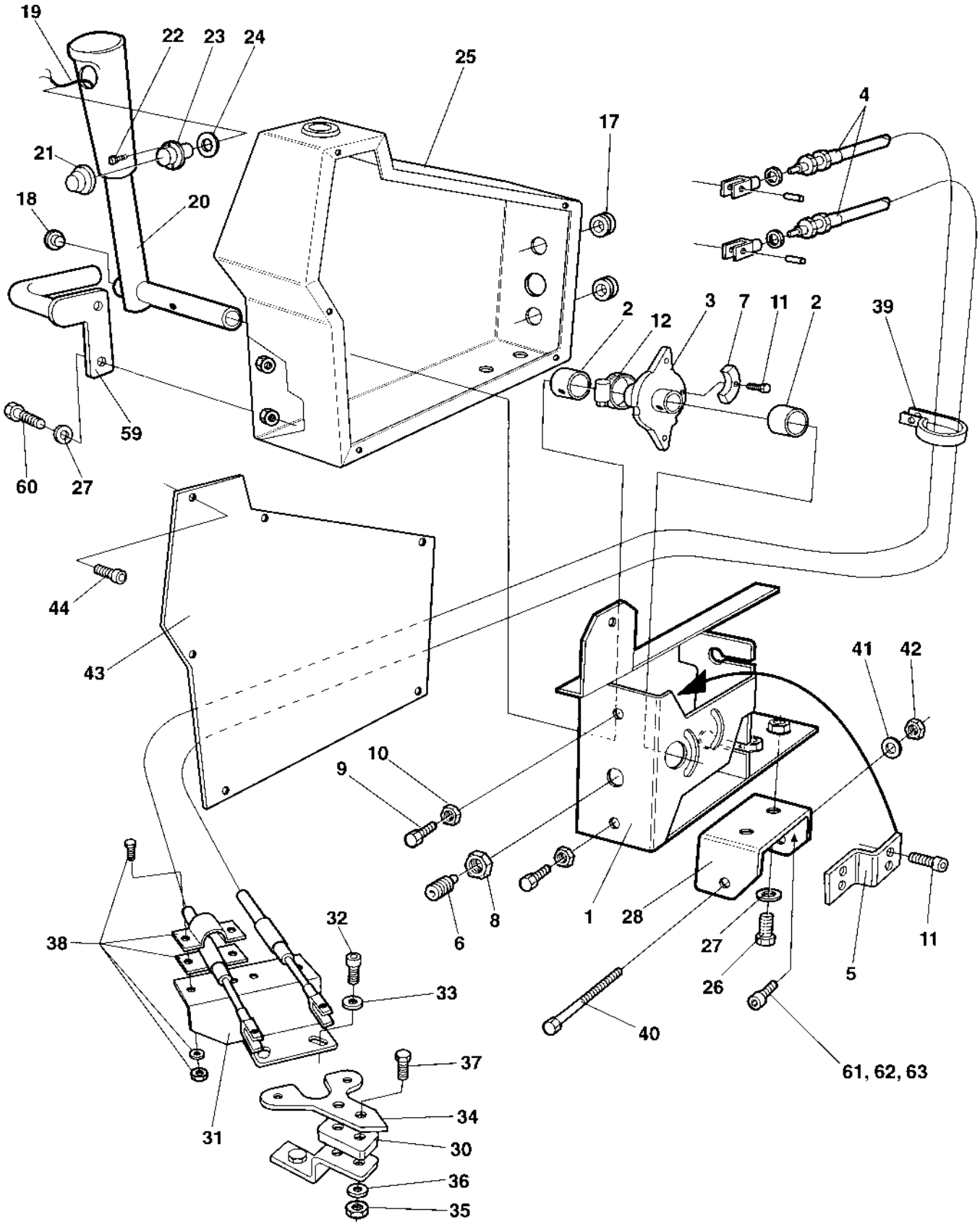

Forward and reverse control

Ref. No.	Part No.	Rem.	Qty	Description		Code
1	909747		1	Framing		
2	908200		2	Bearing		
3	909748		1	Cam disc		
4	909749	A	2	Cable		
	570004		1	.Nut	M6	
	908193		1	.Fork		
5	909751		1	Bracket		
6	922325		1	Spring ball plunger		D
7	909750		1	Cam		
8	573004		1	Nut		
9	533038		2	Screw		
10	573004		2	Nut		
11	533010		1	Screw		
12	313147		1	Hose clip		
17	909122		2	Grommet		
18	902203		1	Plug		
19	376396		1	Cable harness		
20	359575		1	Control lever		
21	348481		1	Cover		D
22	371009		2	Screw		
23	928497		1	Push button		D
24	359940		1	Washer		
25	359928		1	Control cover		
26	500053		2	Screw	M8-1,25x20 8.8	
27	904229		2	Washer		
28	381676		1	Bracket		
30	371507	D	1	Spacer		
31	359932		1	Control bracket		
32	903799		3	Screw	M6 x 70	
33	904228		3	Washer		
34	359931		1	Control bracket		
35	586003		2	Lock nut	M8	
36	904229		4	Washer		
37	500023		2	Screw	M8-1,25x40 8,8	
38	465013		2	Clamp		D
39	921104		1	Clamp		
40	500198		1	Screw		
41	904231		1	Washer	13x24x2	
42	586019		1	Lock nut	M12	
43	359929		1	Cover		
44	903658		6	Screw	M5x10	
59	373177	B	1	Yoke		
60	570019	B	2	Screw		
61	508092		1	Screw	M8-1,25x20H 8,8	
62	904229		2	Washer		
63	586003		1	Lock nut	M8	

A) Forward and reverse
B) Not for cab
D) Only on early machines.

Speed limiter Option

17657

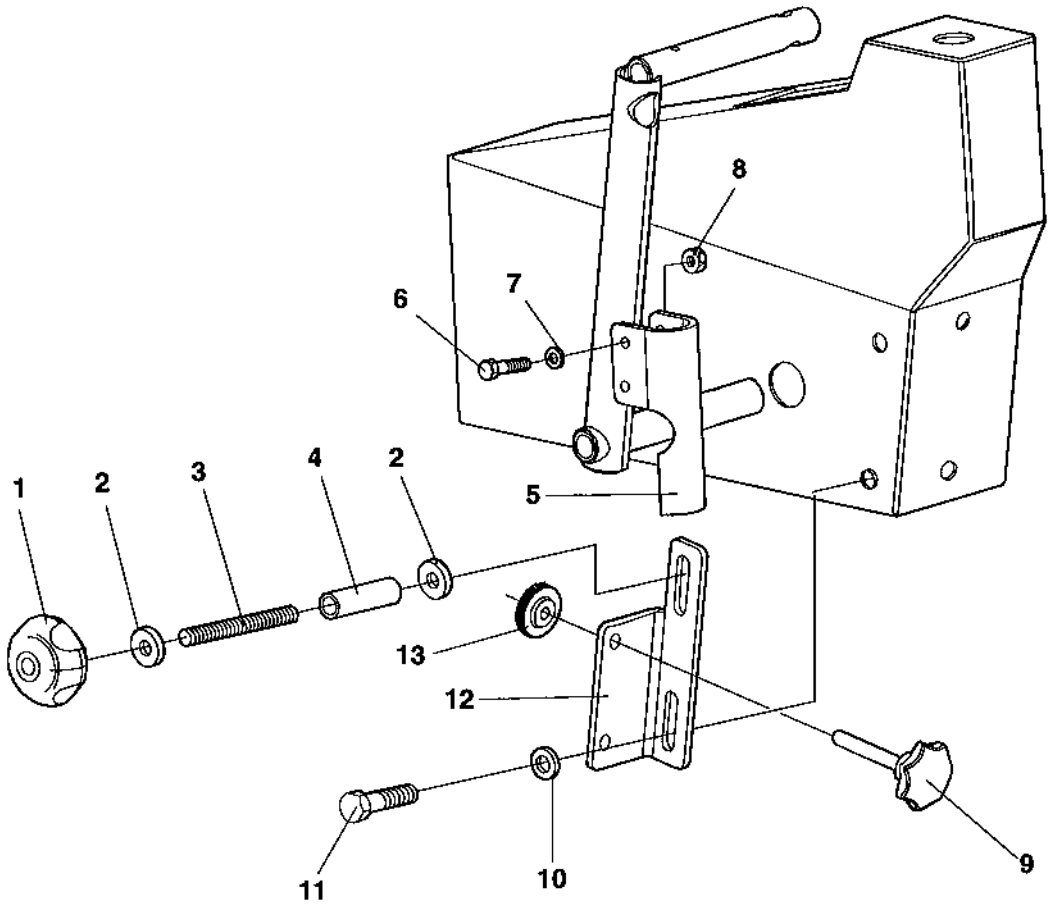

Speed limiter Option

Ref. No.	Part No.	Rem.	Qty	Description		Code
1	904290		1	Hand knob		
2	904640		2	Washer	8,4x22x3	
3	791313		1	Threaded stud	M8x85	
4	386003		1	Spacer sleeve		
5	386002		1	Lever holder		
6	500186		2	Screw		
7	904228		4	Washer		
8	586002		2	Lock nut	M6	
9	791314		1	Handle knob		
10	904556		1	Washer	8,4x16x3,0	
11	500053		1	Screw	M8-1,25x20 8.8	
12	385994		1	Bracket		
13	791312		2	Letter nut		

Engine controls

15812S

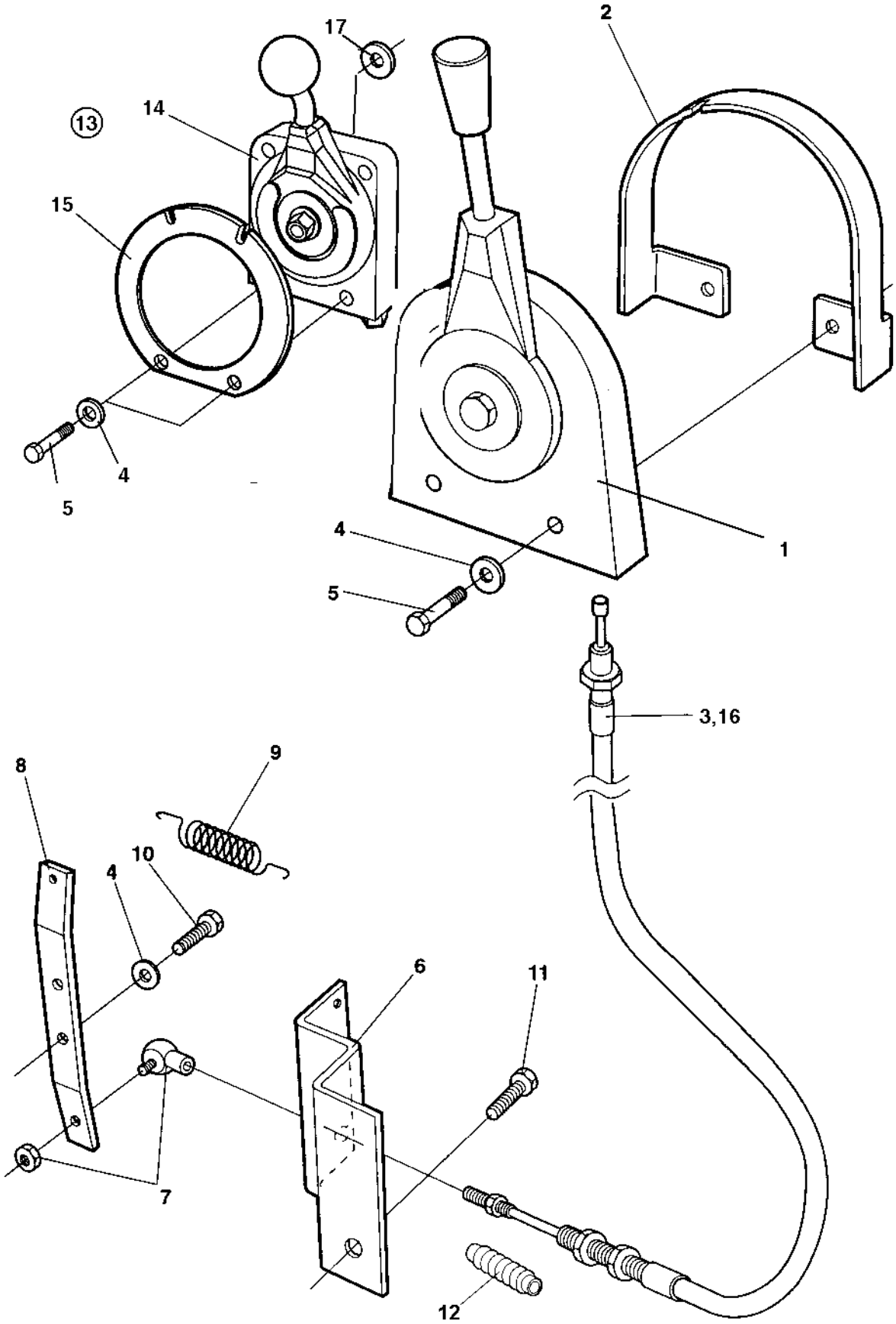

Engine controls

Ref. No.	Part No.	Rem.	Qty	Description		Code
1	382213		1	Control		
2	382225		1	Yoke		
3	370096		1	Cable		D
4	904228		4	Washer		
5	500015		2	Screw	M6-1x30 8,8	
6	359936		1	Control bracket		
7	416034		1	Ball joint		D
8	357498		1	Control lever		
9	357500		1	Spring		
10	500013		2	Screw	M6-1x16 8,8	
11		A	2	Screw		
12	382349	B	1	Bellows		
13	389170		1	Throttle control, cpl		
14	389175		1	.Control		
15	389177		1	.Snap plate		
16	389184		1	.Throttle cable		D
17	904735		2	Washer		

A) For engine bracket
B) Included in complete control.

Engine controls

18763

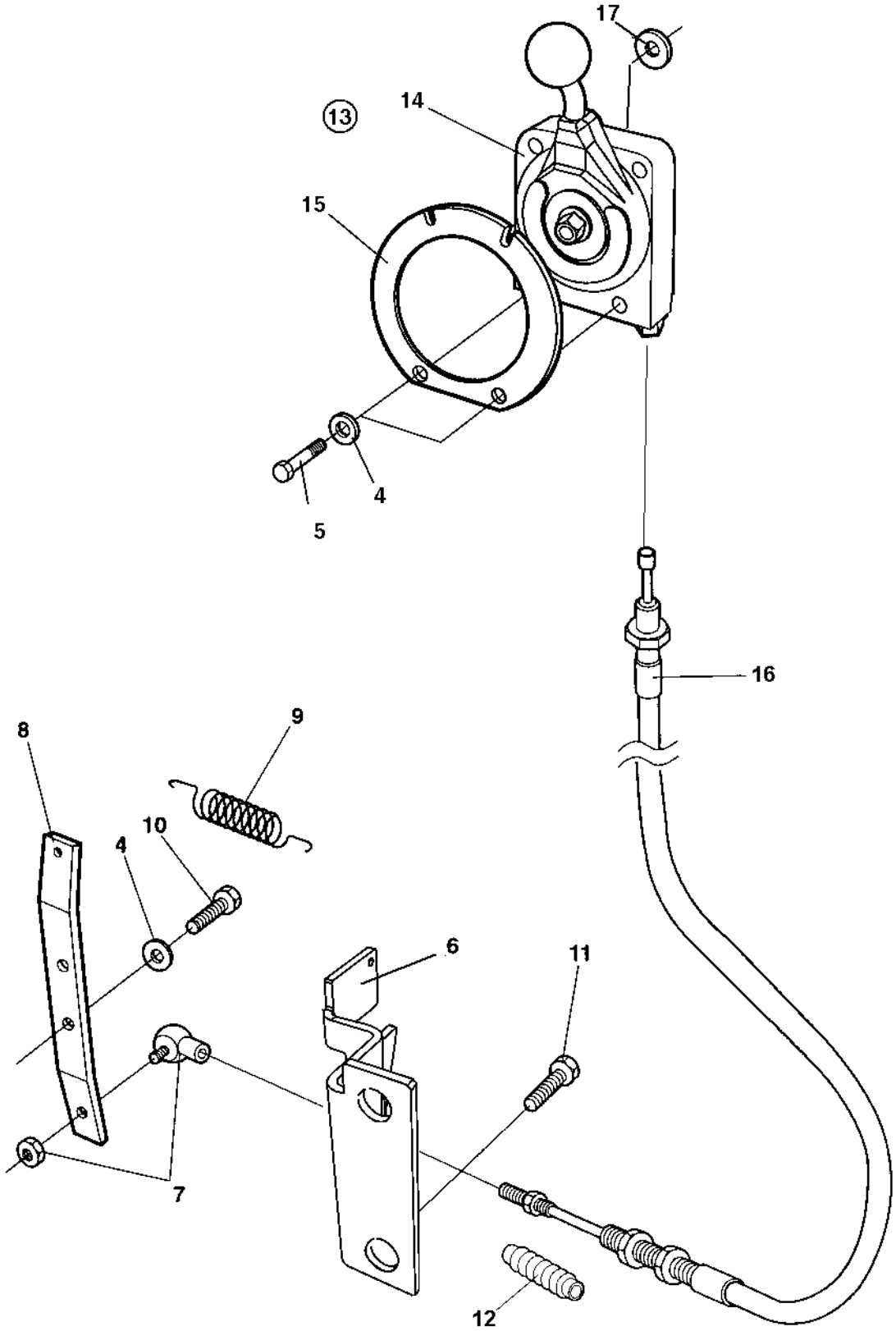

Engine controls

Ref. No.	Part No.	Rem.	Qty	Description		Code
4	904228		4	Washer		
5	500015		2	Screw	M6-1x30 8,8	
6	395969		1	Control bracket		
7	416034		1	Ball joint		D
8	395548		1	Control lever		
9	357500		1	Spring		
10	500013		2	Screw	M6-1x16 8,8	
11		A	2	Screw		
12	382349	B	1	Bellows		
13	389170		1	Throttle control, cpl		
14	389175		1	.Control		
15	389177		1	.Snap plate		
16	389184		1	.Throttle cable		D
17	904735		2	Washer		

A) For engine bracket
B) Included in complete control.

Rear mirror

15889

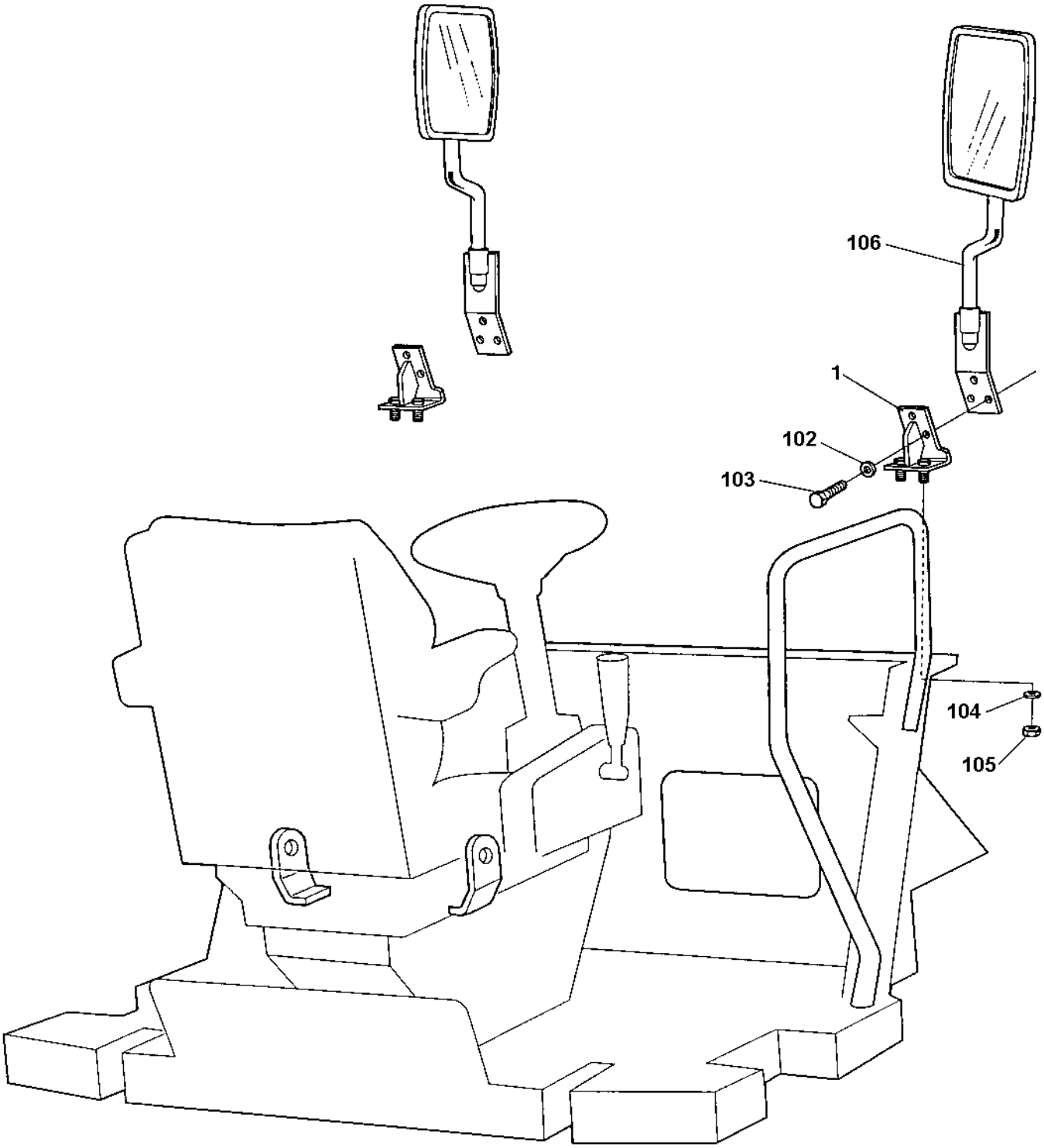

Rear mirror

Ref. No.	Part No.	Rem.	Qty	Description	Code
			1	Rear mirror	Option
1	371819		2	.Bracket	
102	600006		6	.Washer	
103	500053		6	.Screw	M8-1,25x20 8.8
104	600008		4	.Washer	
105	586018		4	.Lock nut	M10
106			2	.Exterior rear mirrors (Page 222)	

Rops and fops With seat belt

17496

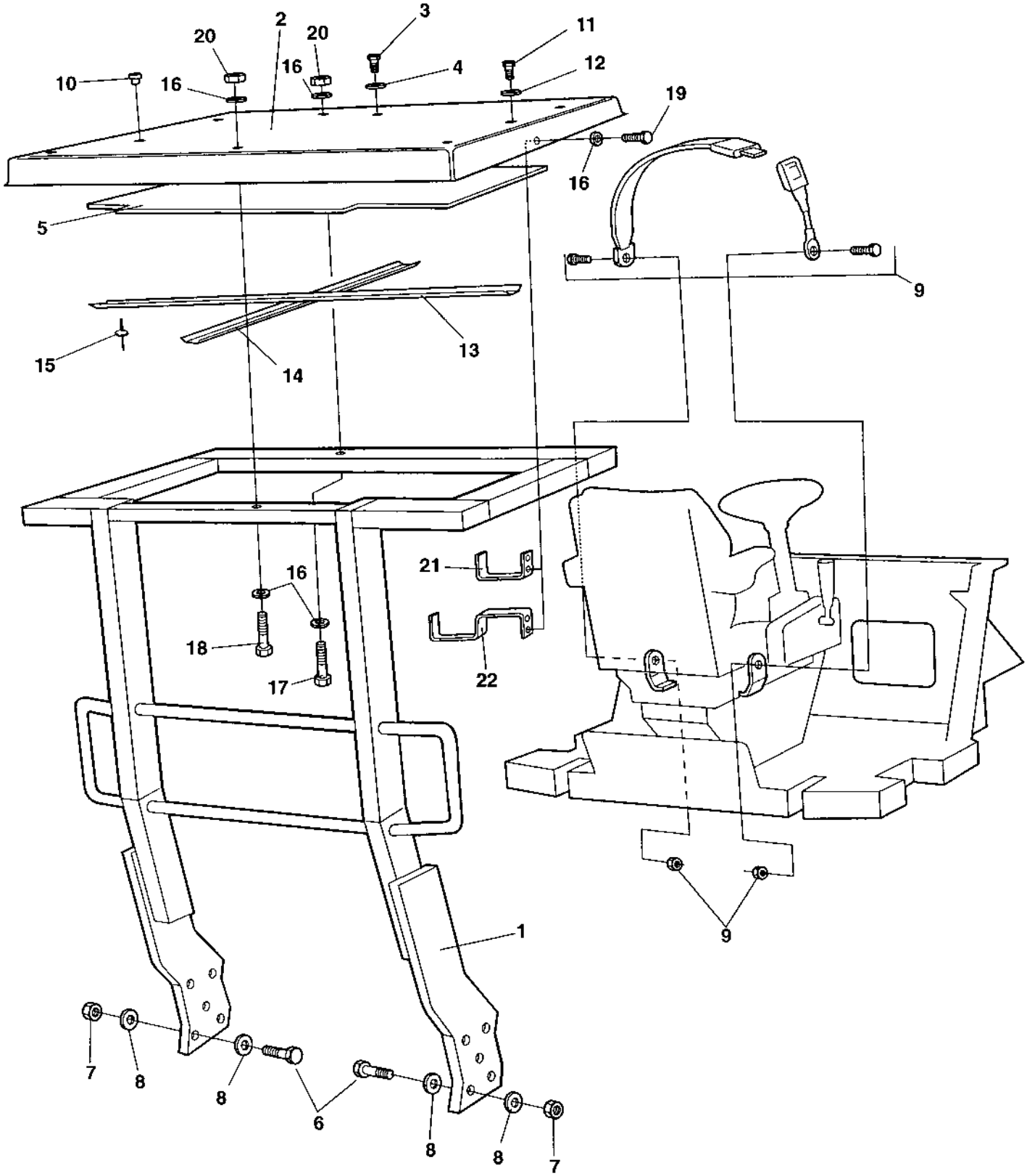

Rops and fops With seat belt

Ref. No.	Part No.	Rem.	Qty	Description	Code
1	370329		1	Rops	
2	370343		1	Rops roof	
	370349		1	Fops roof	
3				Not used on this model	
4				Not used on this model	
5	372631		1	Insulating material	
6	903792		10	Screw	
7	903736		10	Nut	
8	904234		20	Washer	25x45x4
9	370766	1	1	Seat belt	
	377677		1	Seat belt	2"
	383200	B,2	1	Seat belt	3"
	379637	B	1	Seat belt	3"
10	904180	A	2	Plug	
11	500047		10	Screw	M8-1,25x35 8,8
12	904734		10	Washer	8,4x26x4
13	380176		1	Absorbent holder	
14	376488		1	Absorbent holder	
15	904619		12	Blind rivet	
16	904734		10	Washer	8,4x26x4
17	500170		2	Screw	
18	500180		1	Screw	M8X110 8,8
19	500019		4	Screw	
20	586003		3	Lock nut	M8
21	383898	C	2	Hook	
22	383900	D	2	Hook	

1) Replaced by PN 377677.
2) Replaced by PN 379637.
A) For lifting holes
B) Option, 3"
C) Valid for Rops.
D) Valid for Fops.

Canopy

16116

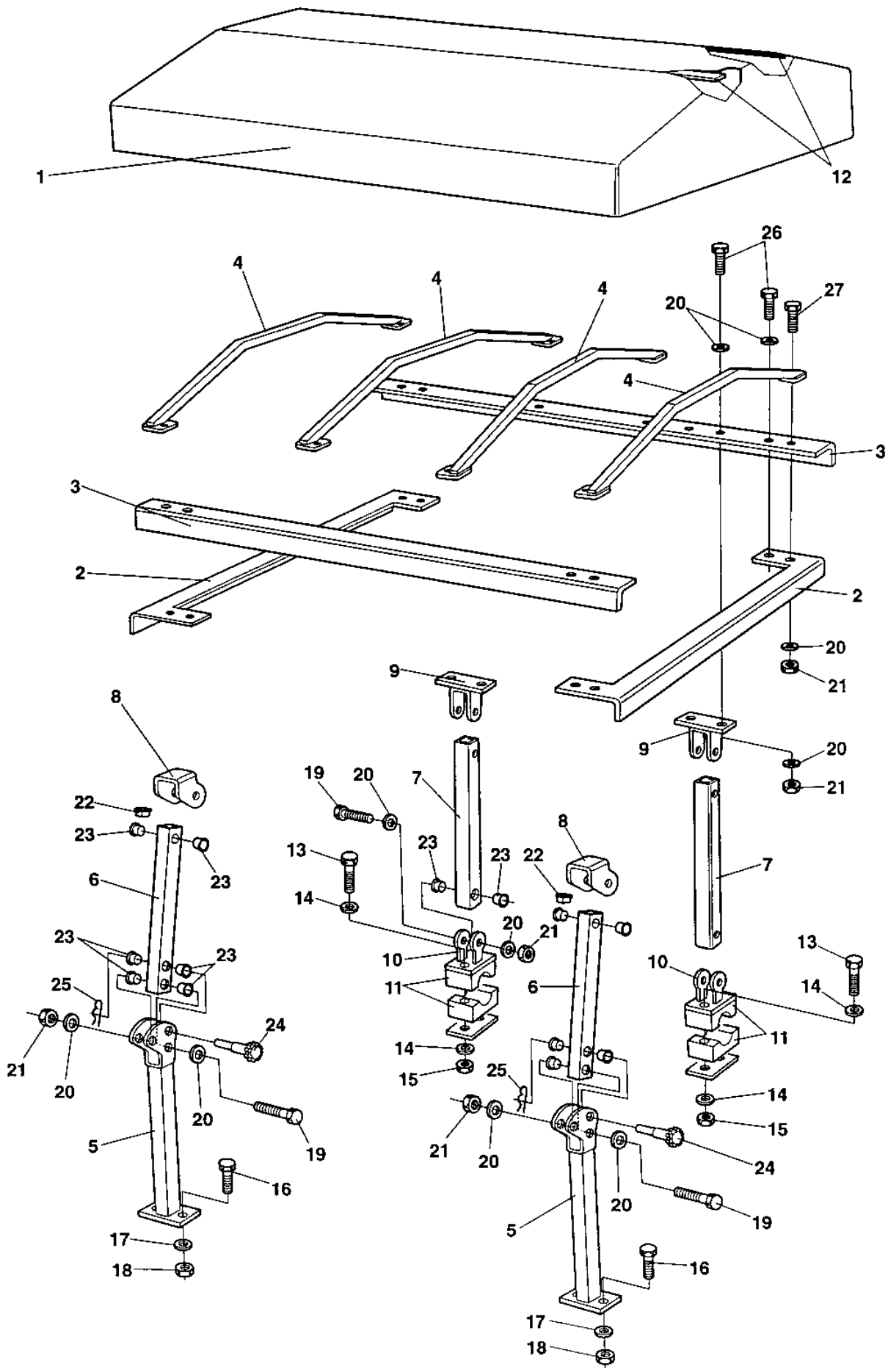

Canopy

Ref. No.	Part No.	Rem.	Qty	Description		Code
1	373906		1	Roof		
2	373747		2	Canopy profile		
3	374024		2	Canopy profile		
4	373749		4	Canopy rib		
5	373968		2	Support, lower front		
6	373986		2	Support, upper front		
7	373987		2	Support, rear		
8	374002		2	Link, upper front		
9	374003		2	Link, upper rear		
10	374004		2	Link, lower rear		
11	371034		2	Clamp		
12	373907		2	Lath		
13	500153		4	Screw		
14	600004		8	Washer		
15	586002		4	Lock nut	M6	
16	500030		4	Screw	M10-1,5x35H 8,8	
17	600008		4	Washer		
18	902287		4	Nut		
19	500189		8	Screw		
20	600006		56	Washer		
21	586003		28	Lock nut	M8	
22	904288		8	Plug		
23	904287		20	Plastic bushing		
24	374066		2	Handle		
25	924585		2	Cotter pin		
26	500021		16	Screw	M8-1,25x25 8.8	
27	500022		4	Screw	M8-1,25x30 8,8	

Cab, asymmetric

Cab, asymmetric

Ref. No.	Part No.	Rem.	Qty	Description	Code
1				Cab, interior (Page 190)	
2				Cab, screens (Page 192)	
3				Cab, inside panels (Page 194)	
4				Cab, wipers, right side (Page 196)	
5				Cab, wipers, front and rear (Page 198)	
6				Cab, door, left side (Page 200)	
				Cab, door, left side (3-split) (Page 202)	
7				Cab, heater and, fan system (Page 204)	
8				Cab, roof mounted, electrical switches (Page 208)	

Cab, interior

18275

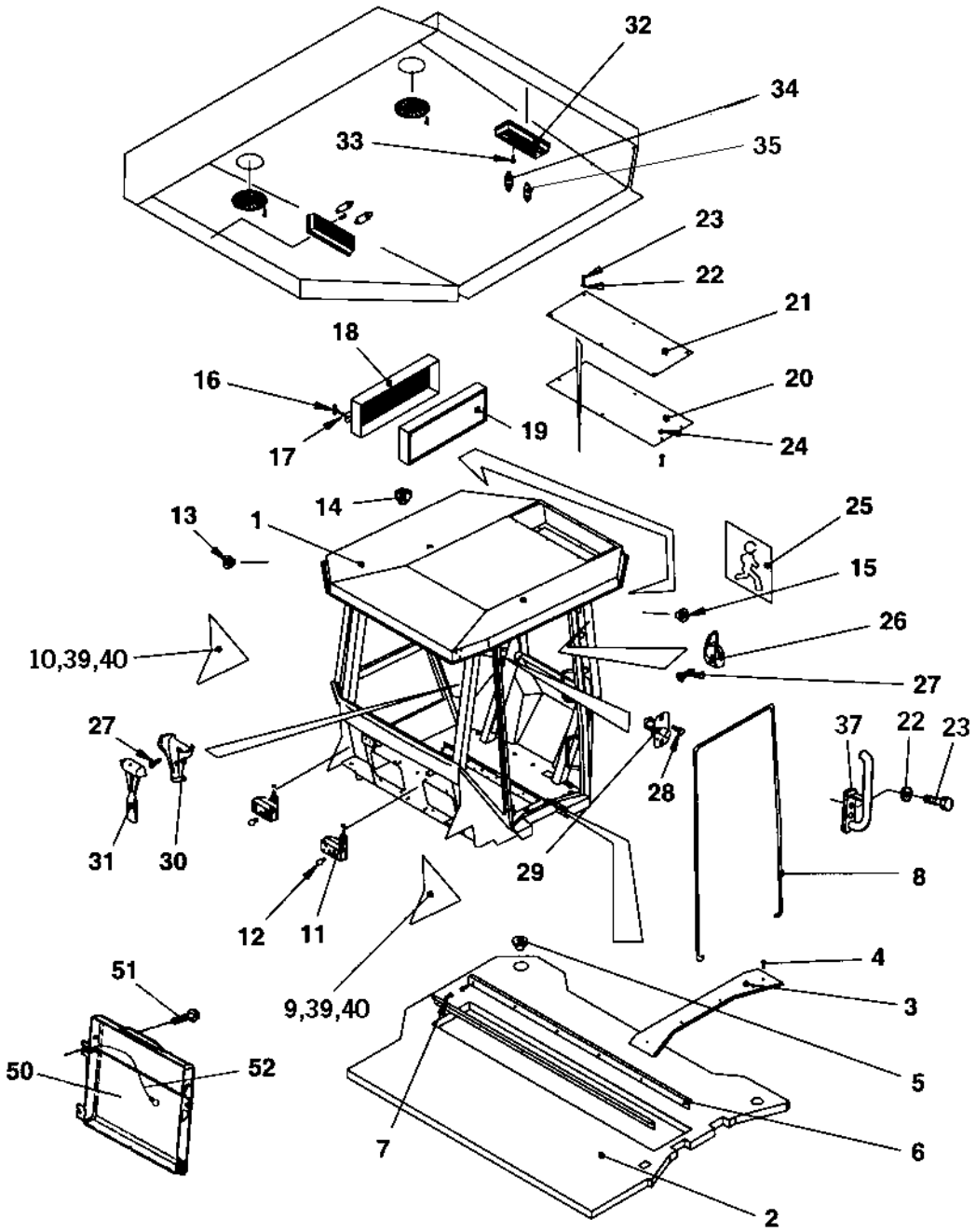

Cab, interior

Ref. No.	Part No.	Rem.	Qty	Description		Code
1	385735		1	Cab, cpl		
2	908509		1	.Floor carpet		
3	908511		1	.List left		
4	903808		4	.Screw		
5	908512		1	.Cover		
6	908510		2	.List		
7	535005		12	.Screw	M5x12	
8	938842	A	1XL	.Sealing strip		
9	938843		1	.Black sticker		
	940848		1	.Side plate		
10	938844		1	.Black sticker		
	940849		1	.Side plate		
11	908268		2	.Work light		
12	938845		2	.Bulb	10W 12V	
13	938660		8	.Grommet		
14	908497		12	.Grommet		
15	909510		3	.Grommet		
16	908504		4	.Handle		
17	908503		4	.O-ring		
18	938846		2	.Filter housing		
19	938847		2	.Air filter		
20	938678		1	.Cover		
21	938679		1	.Cover		
22	936277		14	.Washer		
23	500053		14	.Screw	M8-1,25x20 8.8	
24	586003		8	.Lock nut	M8	
25	935589		1	.Decal		
26	908505		1	.Hook		
27	938676		4	.Screw		
28	901315		2	.Screw		
29	908500		1	.Door switch		
30	908506		1	.Holder		
31	908507		1	.Emergency hammer		
32	908515		2	.Inner light		
33	541535		4	.Screw		
34	985051		4	.Bulb	12V,10W	B
35	985013		2	.Bulb	12V,5W	B
37	370806		1	.Grab handle		
39	904228		5	.Washer		
40	500040		5	.Screw	M6-1x20 8,8	
50	383705		1	Instruction book holder		
51	791226		4	Screw		
52	357643		1	Wire		

A) L=5,0 m

Cab, screens

17621

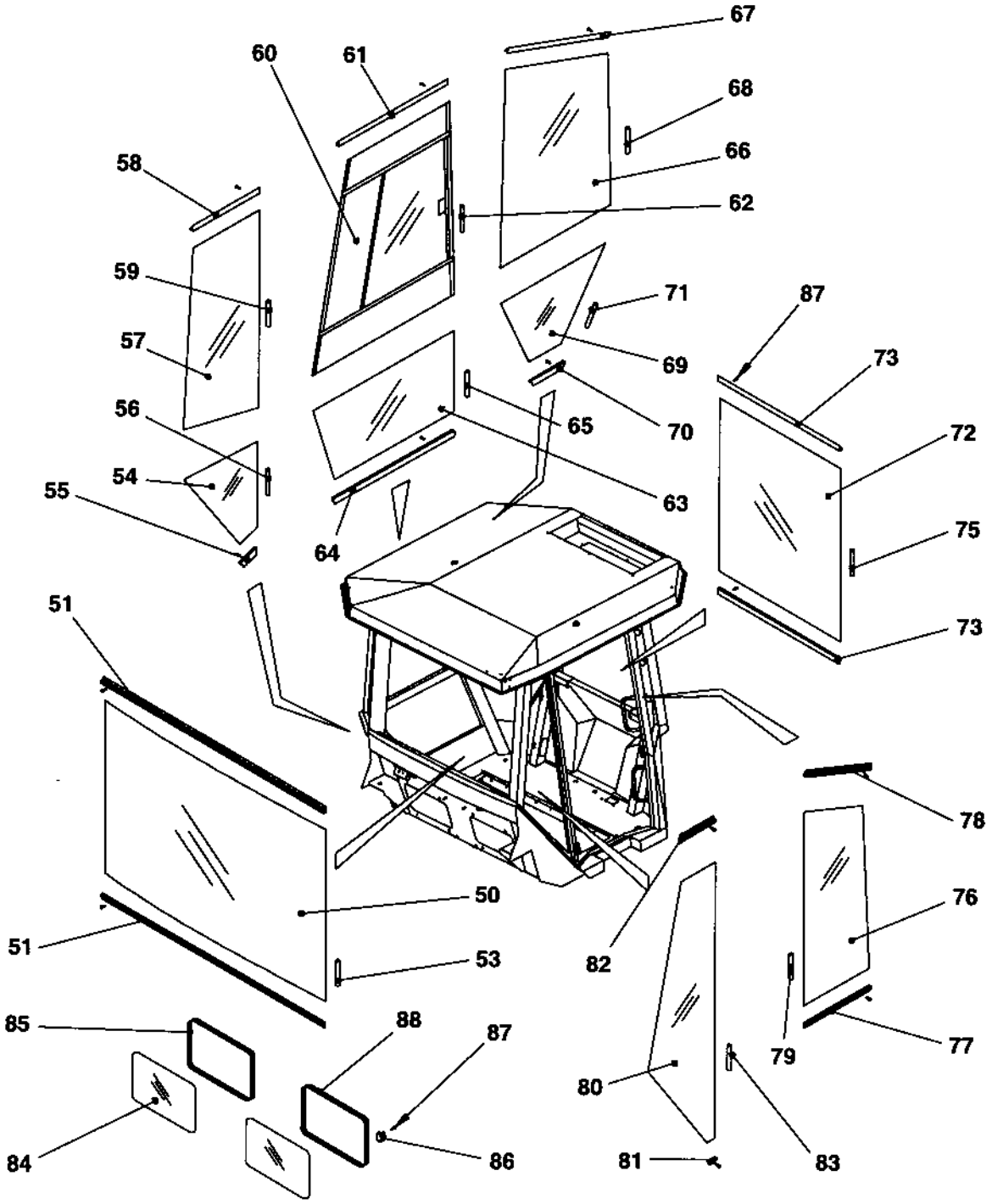

Cab, screens

Ref. No.	Part No.	Rem.	Qty	Description	Code
				Cab, cpl	
50	937395		1	.Front screen	Green
51	908546		1	.List	
53	938834	A	1XL	.Sealing strip	
54	937398		1	.Screen	Green
55	908549		1	.List	
56	938834	B	1XL	.Sealing strip	
57	937397		1	.Screen	Green
58	908548		1	.List	
59	938834	C	1XL	.Sealing strip	
60	937399		1	.Screen sliding	Green
61	908550		1	.List	
62	938834	D	1XL	.Sealing strip	
63	937400		1	.Screen	Green
64	908551		1	.List	
65	938834	A	1XL	.Sealing strip	
66	938565		1	.Screen	
67	938835		1	.List	
68	938834	E	1XL	.Sealing strip	
69	937402		1	.Screen	Green
70	908553		1	.List	
71	938834	B	1XL	.Sealing strip	
72	937403		1	.Screen	Green
73	908764		2	.List	
75	938834	A	1XL	.Sealing strip	
76	938566		1	.Screen	Green
77	908556		1	.List	
78	938836		1	.List	
79	938834	F	1XL	.Sealing strip	
80	937405		1	.Screen	Green
81	908993		1	.List	
82	908557		1	.List	
83	938834	G	1XL	.Sealing strip	
84	938567		1	.Screen	Green
85	938837	H	1XL	.Sealing strip	
86	938838		8	.List	
87	937932		57	.Screw	
88	938837	H	1XL	.Sealing strip	

A) L=1,8 m
B) L=1,6 m
C) L=2,4 m
D) L=2,9 m
E) L=2,5 m
F) L=2,1 m
G) L=3,0 m
H) L=1,3 m

Cab, inside panels

17622

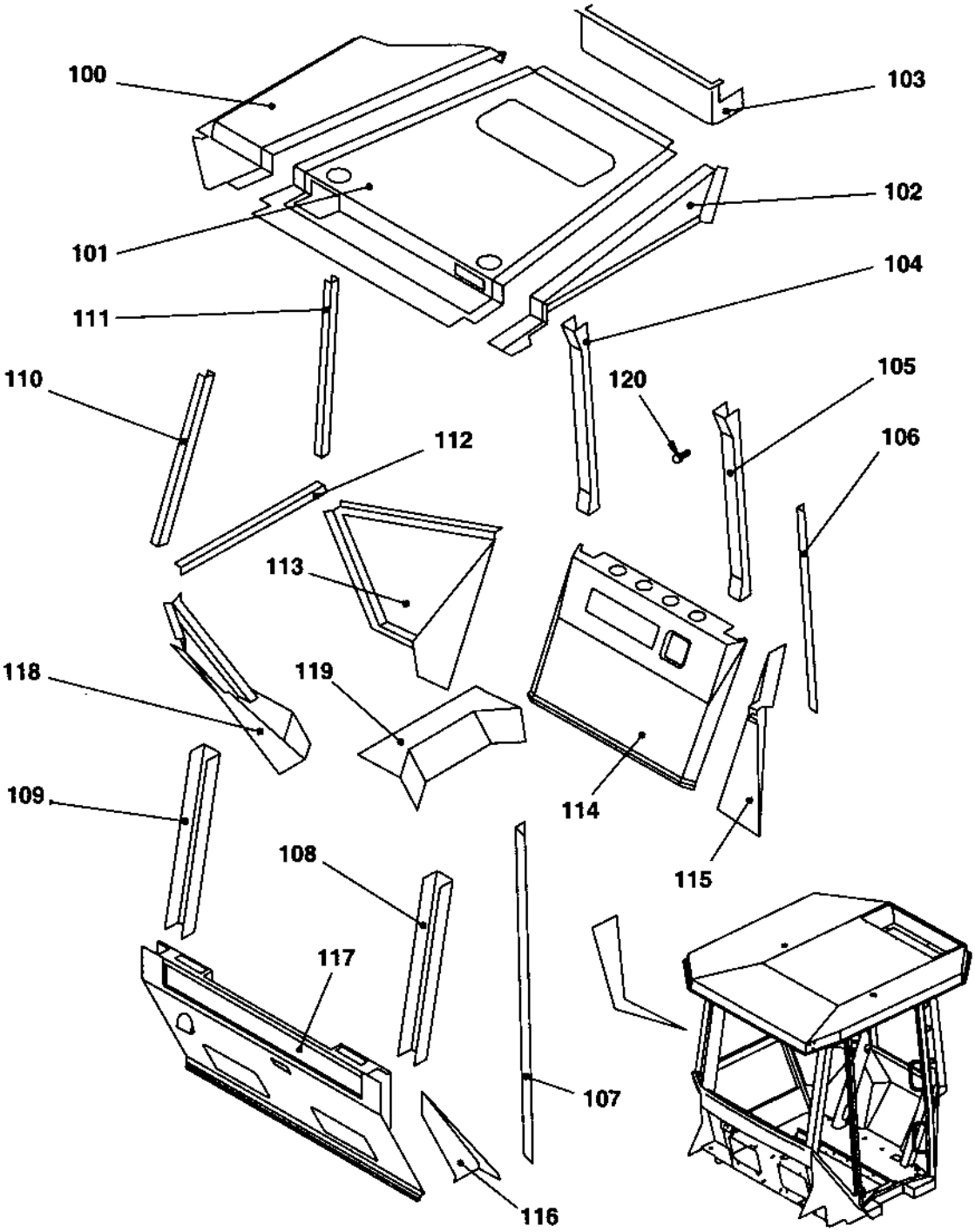

Cab, inside panels

Ref. No.	Part No.	Rem.	Qty	Description	Code
				Cab, cpl	
100	938806		2	.Panel	
101	938807		1	.Panel	
102	938808		1	.Panel	
103	938809		1	.Panel	
104	938810		1	.Panel	
105	938811		1	.Panel	
106	908535		1	.Panel	
107	908536		1	.Panel	
108	908529		1	.Panel	
109	908530		1	.Panel	
110	908531		1	.Panel	
111	908532		1	.Panel	
112	908540		1	.Panel	
113	908542		1	.Panel	
114	938812		1	.Panel	
115	908544		1	.Panel	
116	908537		1	.Panel	
117	938813		1	.Panel	
118	908539		1	.Panel	
119	908541		1	.Panel	
120	938677		50	.Screw	

Cab, wipers, right side

17623

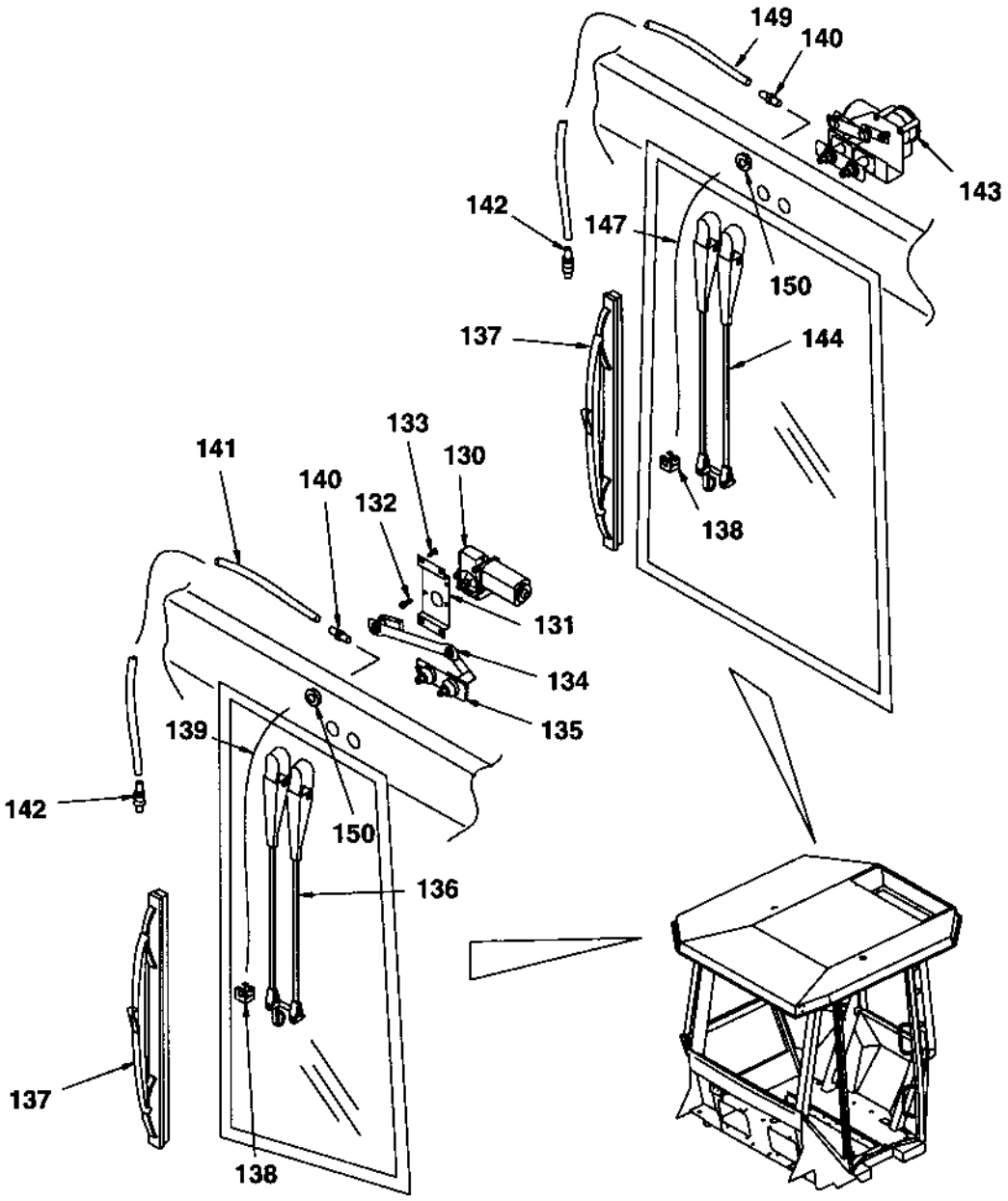

Cab, wipers, right side

Ref. No.	Part No.	Rem.	Qty	Description		Code
				Cab, cpl		
130	908269		1	.Wiper motor		
131	908565		1	.Bracket		
132	500012		3	.Screw	M6x12	
133	541702		4	.Screw	M6x12	
134	908363		1	.Transmission		
135	908364		1	.Intermediate shaft		
136	908270		1	.Wiper arm		
137	908271		2	.Wiper blade		
138	908559		2	.Nozzle		
139	908560	A	1XL	.Rubber hose		
140	908561		2	.Grommet		
141	908563	B	1XL	.Plastic hose		
142	908564		2	.Check valve		
143	908281		1	.Wiper motor		
144	908282		1	.Wiper arm		
147	908560	A	1XL	.Rubber hose		
149	908563	B	1XL	.Plastic hose		
150	908496		4	.Grommet		

A) L=1,0 m
B) L=6,0 m

Cab, wipers, front and rear

17615

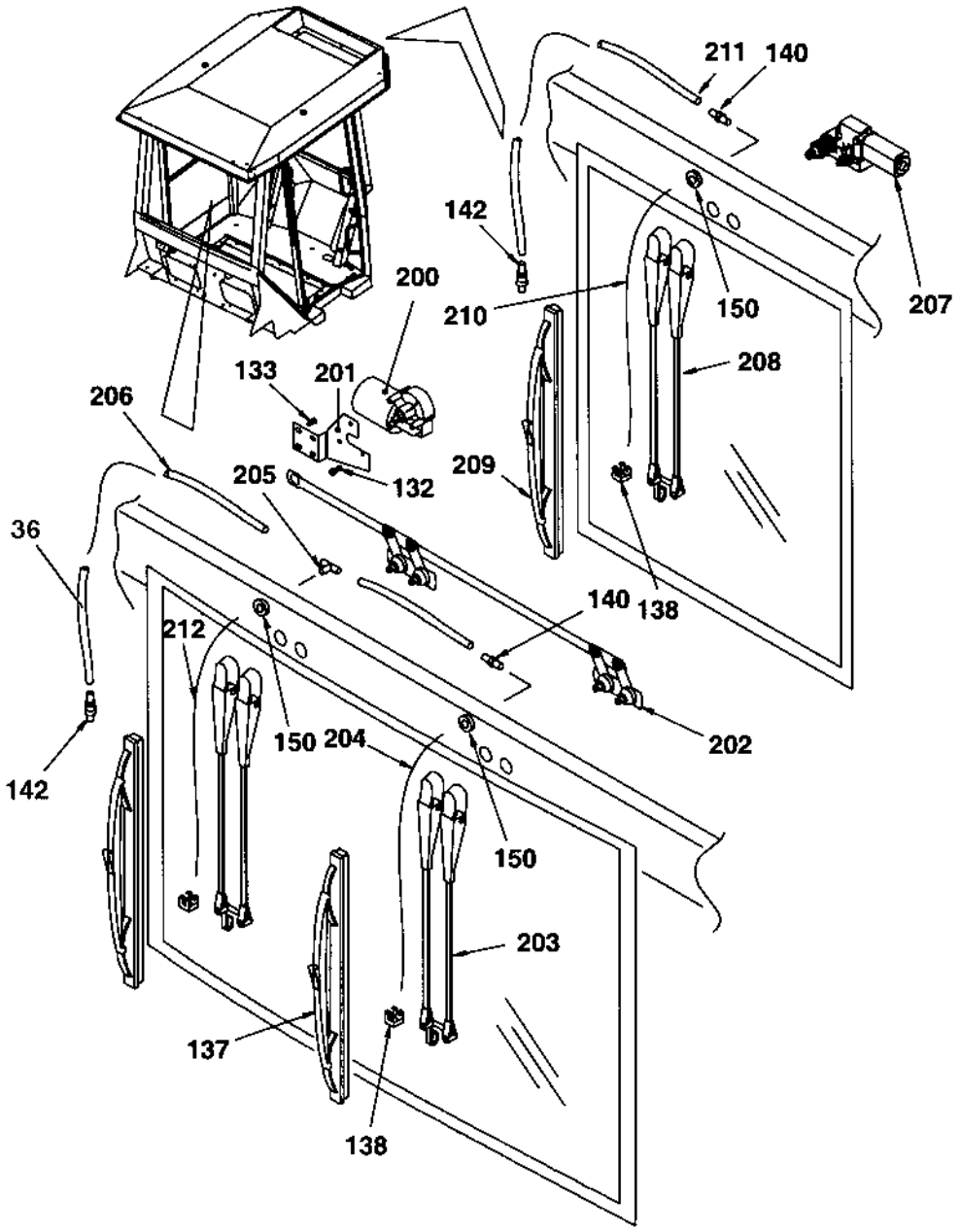

Cab, wipers, front and rear

Ref. No.	Part No.	Rem.	Qty	Description		Code
			1	Cab, cpl		
36	903082	C	1XL	.Hose shield		
132	500012		3	.Screw	M6x12	
133	541702		4	.Screw	M6x12	
137	908271		2	.Wiper blade		
138	908559		3	.Nozzle		
140	908561		2	.Grommet		
142	908564		2	.Check valve		
150	908496		3	.Grommet		
200	908272		1	.Wiper motor		
201	908558		1	.Bracket		
202	908362		1	.Transmission		
203	908273		2	.Wiper arm		
204	908560	A	1XL	.Rubber hose		
205	908562		1	.T-connection		
206	908563	B	1XL	.Plastic hose		
207	908278		1	.Wiper motor		
208	908279		1	.Wiper arm		
209	908280		1	.Wiper blade		
210	908560	A	1XL	.Rubber hose		
211	908563	B	1XL	.Plastic hose		
212	908560	A	1XL	.Rubber hose		

A) L=1,0 m
B) L=6,0 m
C) L=1,8 m

Cab, door, left side

17616

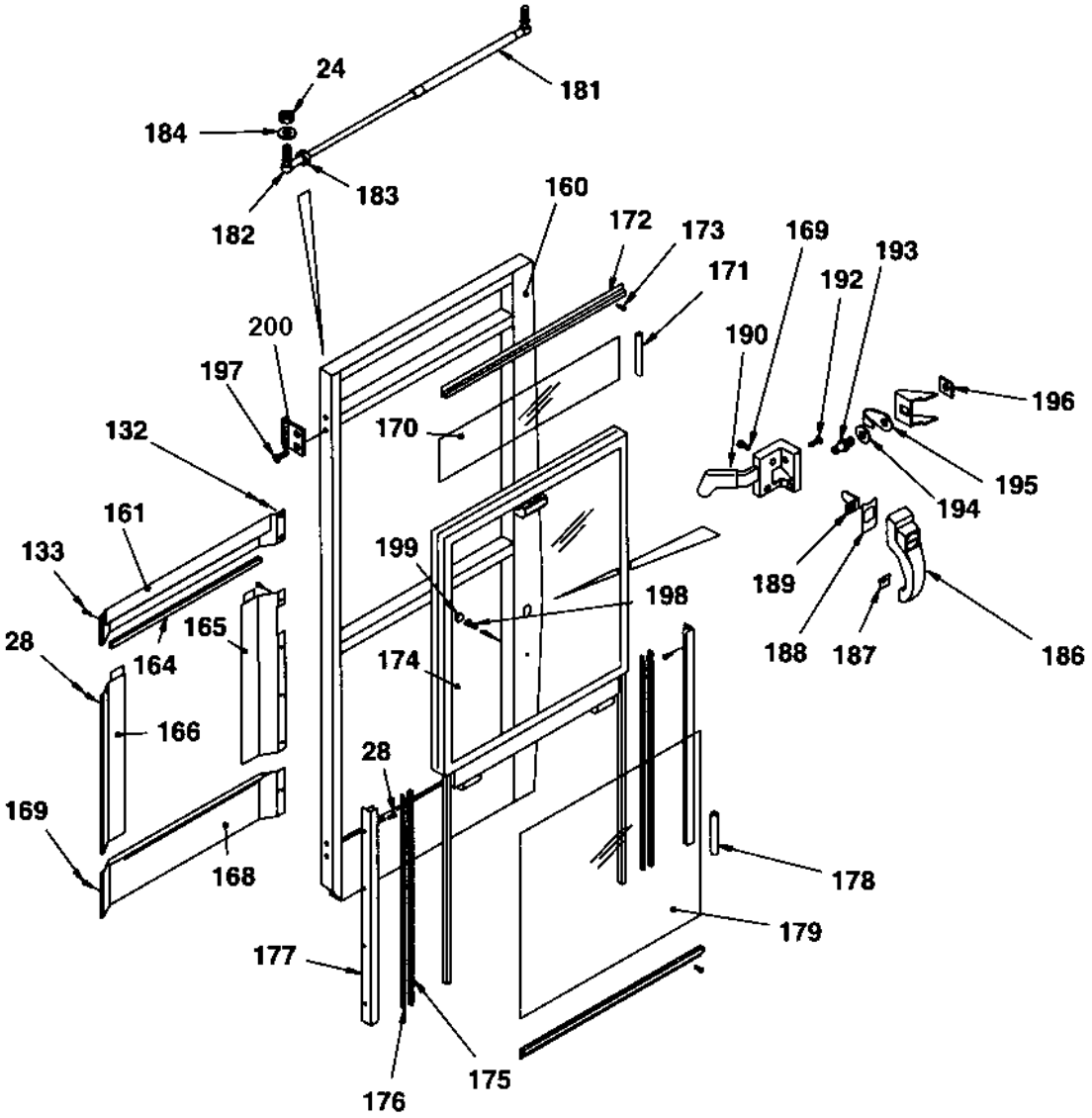

Cab, door, left side

Ref. No.	Part No.	Rem.	Qty	Description		Code
			1	Cab, cpl		
	936897		1	Door, cpl		
24	586003		2	.Lock nut	M8	
28	901315		16	.Screw		
132	500012		2	.Screw	M6x12	
133	541702		2	.Screw	M6x12	
160	908566		1	.Door frame, left		
161	908567		1	.Cover		
164	908568	A	1XL	.Edge trim		
165	908569		1	.Cover		
166	908570		1	.Cover		
168	908571		1	.Cover		
169	903805		8	.Screw		
170	937406		1	.Screen	Green	
171	908545	B	1XL	.Seal list		
172	908572		1	.List		
173	903782		10	.Screw	M5x12	
174	937407	E	1	.Screen	Green	
	939469		1	..Handle		
175	908573	C	1XL	.Sealing		
176	908574	C	1XL	.Sealing		
177	908575		2	.Slide bar		
178	908545	D	1XL	.Seal list		
179	937408		1	.Screen	Green	
181	908284		1	.Gas spring		
	908354	1	1	.Mounting kit		
182	908576		1	.Ball joint		
183	570005		1	.Nut	M8	
184	904229		2	.Washer		
186	935244		1	.Door handle with key		
	902866		1	..Key	Marked "455"	D
187	908577		1	.Washer		
188	908578		1	.Washer		
189	908579		1	.Leader		
190	908287		1	.Lock		
192	903802		2	.Screw		
193	908580		1	.Lock pin		
194	908581		1	.Washer		
195	908582		1	.Cover		
196	908583		1	.Bracket		
197	513025		4	.Screw		
198	508001		1	.Screw	M6x12	
199	908584		1	.Rubber seal		
200	937056		2	.Hinge, cpl		

1) Inculdes item 24, 182,183 and 184.
A) L=0,7 m
B) L=1,0 m
C) L=1,4 m
D) L=1,8 m
E) Up-down

Cab, door, left side (3-split)

18167

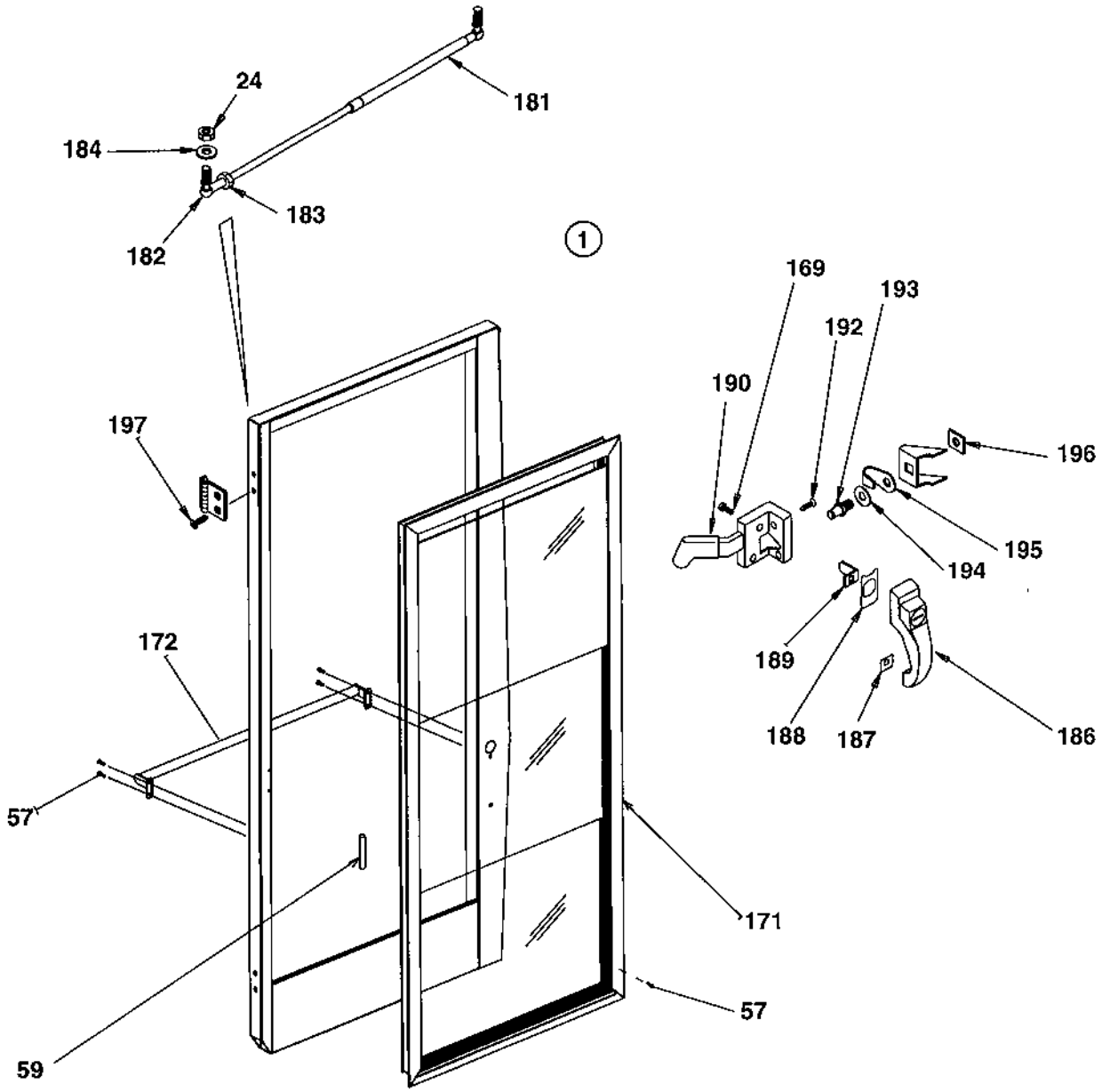

Cab, door, left side (3-split)

Ref. No.	Part No.	Rem.	Qty	Description		Code
			1	Cab, cpl		
1	940395		1	.Door, cpl		
24	586003		2	..Lock nut	M8	
57	940389		16	.Screw		
59	940391	A	1XL	..List		
169	903805		8	..Screw		
171	940394		1	..Door window		
	945264		1	...Screen cpl, top		
	945265		1	...Screen cpl, middle		
	945266		1	...Screen cpl, bottom		
172	940392		1	..Handle		
181	908284		1	..Gas spring		
	908354	1	1	..Mounting kit		
182	908576		1	..Ball joint		
183	570005		1	..Nut	M8	
184	904229		2	..Washer		
186	935244		1	..Door handle with key		
	902866		1	...Key	Marked "455"	D
187	908577		1	..Washer		
188	908578		1	..Washer		
189	908579		1	..Leader		
190	908287		1	..Lock		
192	903802		2	..Screw		
193	908580		1	..Lock pin		
194	908581		1	..Washer		
195	908582		1	..Cover		
196	908583		1	..Bracket		
197	513025		4	..Screw		

1) Inculdes item 24, 182,183 and 184.
A) L=3,9 m

Cab, heater and, fan system

17618

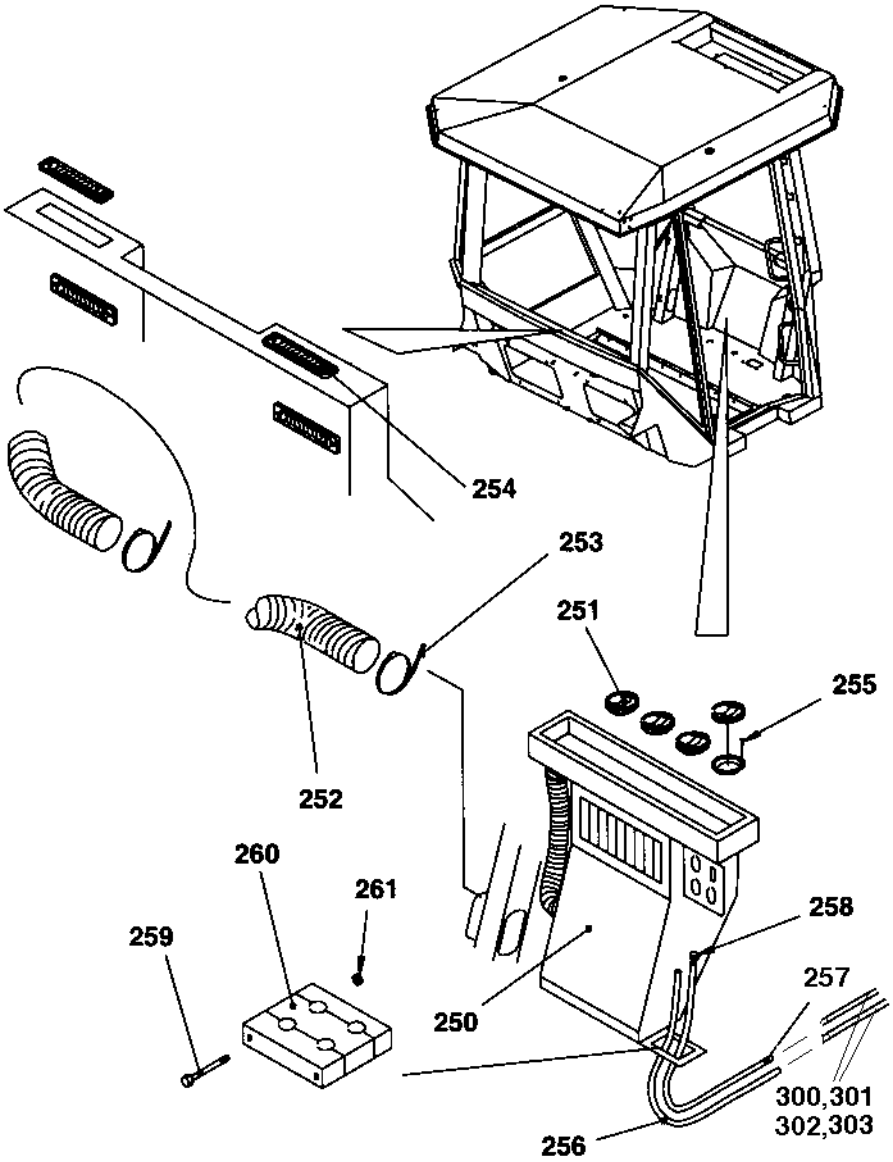

Cab, heater and, fan system

Ref. No.	Part No.	Rem.	Qty	Description	Code
			1	Cab, cpl	
250	385769		1	.Heater unit (Page 206)	
251	385442		4	.Air nozzle	
252	908599	A	1XL	.Hose	
253	908600		2	.Clamp	
254	908598		4	.Nozzle	
255	938691		16	.Screw	
256	938872	B	1XL	.Hose	
257	938873	C	1XL	.Hose	
258	938874		2	.Clamp	
259	500153		2	.Screw	
260	938871		1	.Hose clamp	
261	570004		2	.Nut	M6
300	370761		2	Hose	
301	747691		2	Hollow screw	
302	330331		6	Washer	18,2x23,9x1,5
303	371727		4	Sleeve	

A) L=1,50 m
B) L=2,75 m
C) L=2,90 m

385769 Heater unit

17651

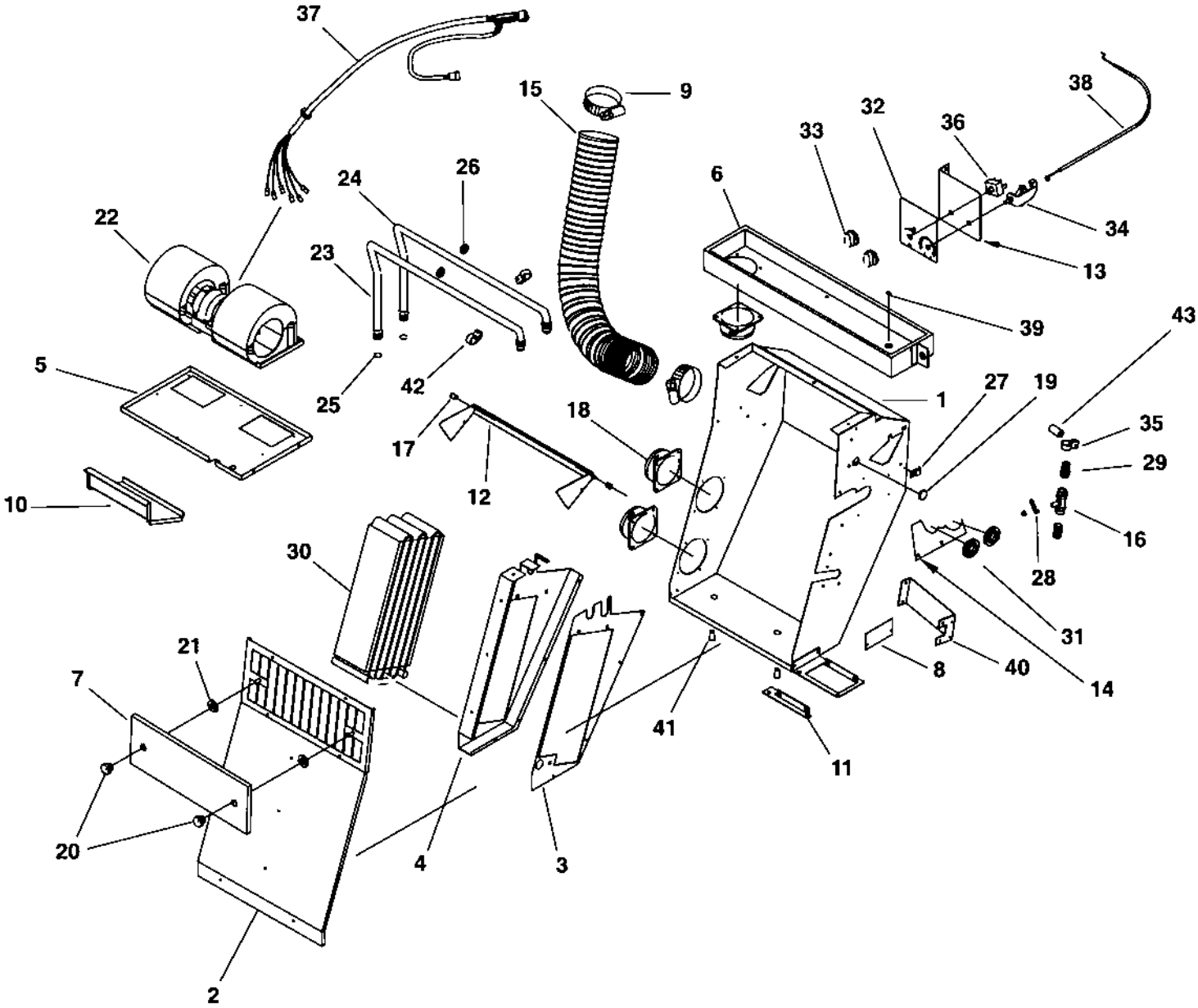

385769 Heater unit

Ref. No.	Part No.	Rem.	Qty	Description	Code
1	938938		1	Casing	
2	938939		1	Cover	
3	938940		1	Coil bracket	
4	938941		1	Coil bracket	
5	938942		1	Blower bracket	
6	938943		1	Air distributor	
7	938864		1	Recirculation cover	
8	938865		1	Block valve cover	
9	938789		2	Clamp	
10	938945		1	Air channel	
11	938779		1	Hose bracket	
12	938780		1	Flapper	
13	938781		1	Control panel	
14	938946		1	Cover plate	
15	938783		1	Air duct	
16	938953		1	Heater valve	
17	938784		2	Bushing	
18	938632		3	Hose adapter	
19	938644		1	Cap	
20	938634		2	Knob	
21	938611		2	Star lock	
22	938638		1	Fan	
23	938947		1	Copper tube	
24	938948		1	Copper tube	
25	384878		2	O-ring	
26	384927		2	Grommet	
27	384880		1	Wire clamp	
28	938949		1	Arm	
29	938950		2	Fitting	
30	384133		1	Coil	
31	938608		2	Grommet	
32	938955		1	Overlay	
33	938620		2	Knob	
34	938788		1	Rotary control	
35	938951		1	Clamp	
36	938622		1	Switch	
37	938647		1	Cable harness	
38	938954		1	Bowden cable	
39	938867		1	Hole plug	
40	938944		1	Heater valve bracket	
41	938636		2	Drain valve	
42	938790		2	Clamp	
43	938952		1	Spacer	

Cab, roof mounted, electrical switches

17617

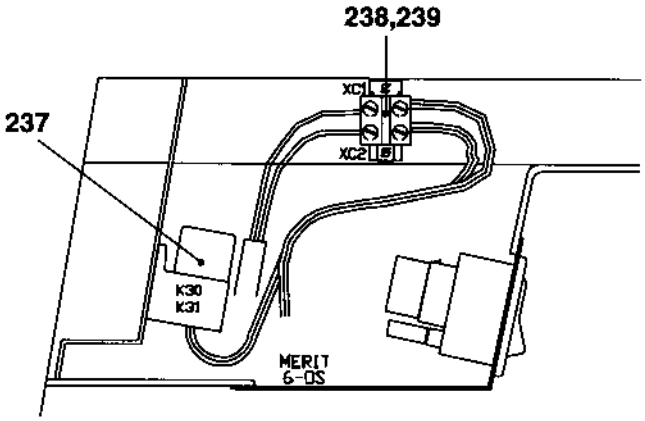

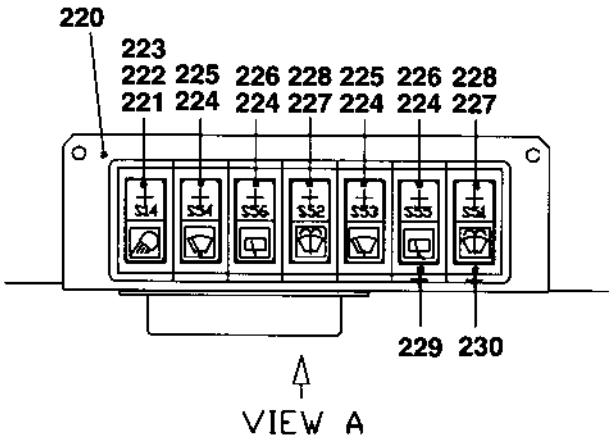

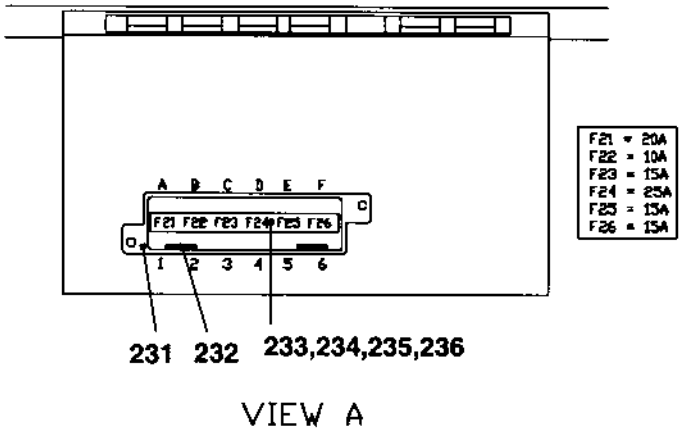

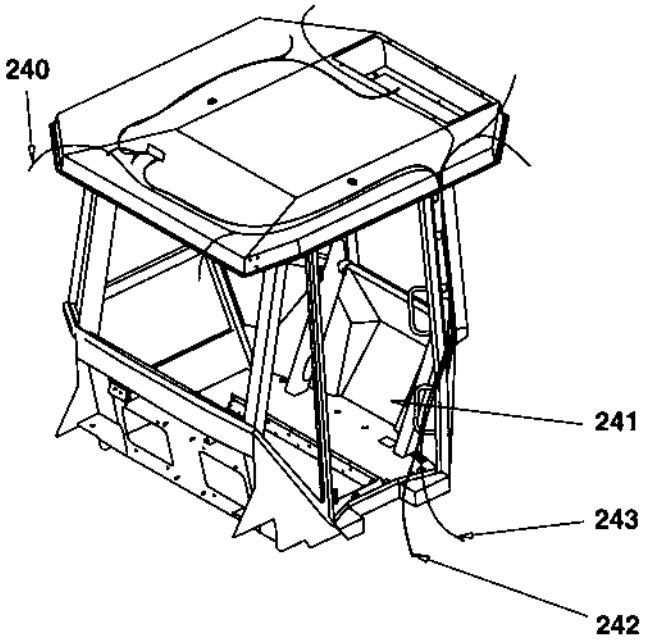

Cab, roof mounted, electrical switches

Ref. No.	Part No.	Rem.	Qty	Description		Code
			1	Cab, cpl		
220	908611		1	.Bracket		
221	908602		1	.Switch		
222	908604		1	.Symbol, work lights		
223	908608		1	.Socket with bulb		
224	908617		4	.Switch		
225	908605		2	.Symbol, wiper		
226	938687		2	.Symbol, wiper		
227	908603		2	.Switch		
228	908618		2	.Symbol, washer		
229	908606		5	.Modular panel		
230	908610		2	.Modular panel		
231	908613		1	.Fuse box		
232	901240		2	.Connector		
233	901228		3	.Fuse	15A	
234	903741		1	.Fuse	20A Yellow Medium	B
235	901227		1	.Fuse	10A	B
236	901229		1	.Fuse	25A	B
237	287597		2	.Relay		D
238	908614		1	.Terminal block		
239	938853		2	.End latch		
240	938029		1	.Cable harness		
241	938854		1	.Cable harness	Roof	
242	938855		1	.Cable harness	Feed	
243	938856		1	.Cable harness	Work light	

Cab, symmetric

Cab, symmetric

Ref. No.	Part No.	Rem.	Qty	Description		Code
1				Cab (Page 212)	Interior	
2				Cab (Page 214)	Screens	
3				Cab (Page 216)	Inside panels	
4				Cab, wipers, front and rear (Page 198)		
6				Cab, door, left side (Page 200)		
				Cab, door, left side (3-split) (Page 202)		
7				Cab, heater and, fan system (Page 204)		
8				Cab, roof mounted, electrical switches (Page 208)		

Cab Interior

18276

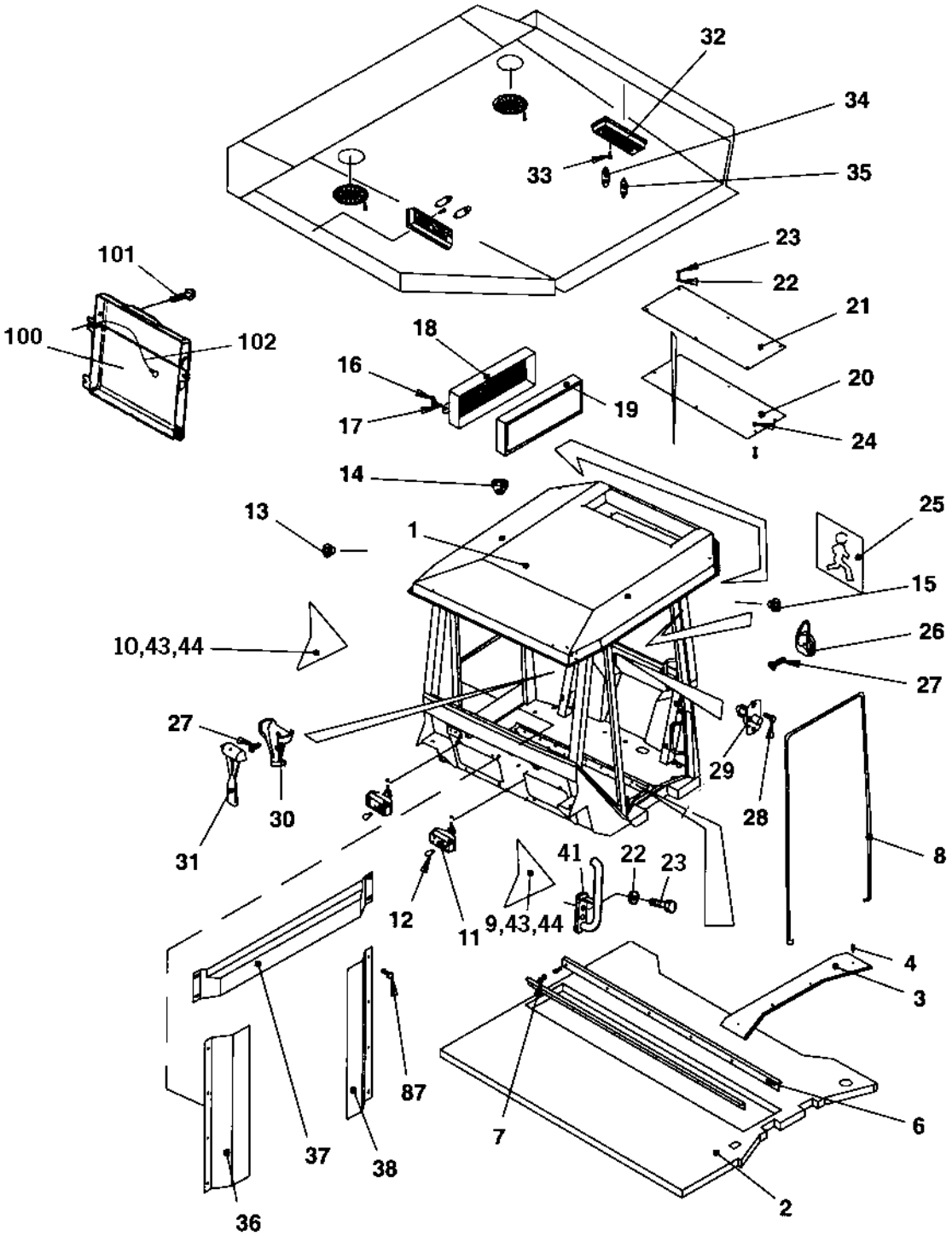

Cab Interior

Ref. No.	Part No.	Rem.	Qty	Description		Code
1	385736		1	Cab, cpl		
2	938848		1	.Floor mat		
3	908511		1	.List left		
4	903808		4	.Screw		
6	908510		2	.List		
7	535005		12	.Screw	M5x12	
8	938842	A	1XL	.Sealing strip		
9	938843		1	.Black sticker		
	940848		1	.Side plate		
10	938844		1	.Black sticker		
	940849		1	.Side plate		
11	908268		2	.Work light		
12	938845		2	.Bulb	10W 12V	
13	938660		8	.Grommet		
14	908497		12	.Grommet		
15	909510		3	.Grommet		
16	908504		4	.Handle		
17	908503		4	.O-ring		
18	938846		2	.Filter housing		
19	938847		2	.Air filter		
20	938678		1	.Cover		
21	938679		1	.Cover		
22	936277		14	.Washer		
23	500053		14	.Screw	M8-1,25x20 8.8	
24	586003		6	.Lock nut	M8	
25	935589		1	.Decal		
26	908505		1	.Hook		
27	938676		4	.Screw		
28	901315		2	.Screw		
29	908500		1	.Door switch		
30	908506		1	.Holder		
31	908507		1	.Emergency hammer		
32	908515		2	.Inner light		
33	541535		4	.Screw		
34	985051		4	.Bulb	12V,10W	B
35	985013		2	.Bulb	12V,5W	B
36	938850		1	.Cover plate		
37	938851		1	.Cover plate		
38	938852		1	.Cover plate		
41	370806		1	.Grab handle		
43	904228		5	.Washer		
44	500040		5	.Screw	M6-1x20 8,8	
87	937932		12	.Screw		
100	383705		1	Instruction book holder		
101	791226		4	Screw		
102	357643		1	Wire		

A) L=5,0 m

Cab Screens

17613

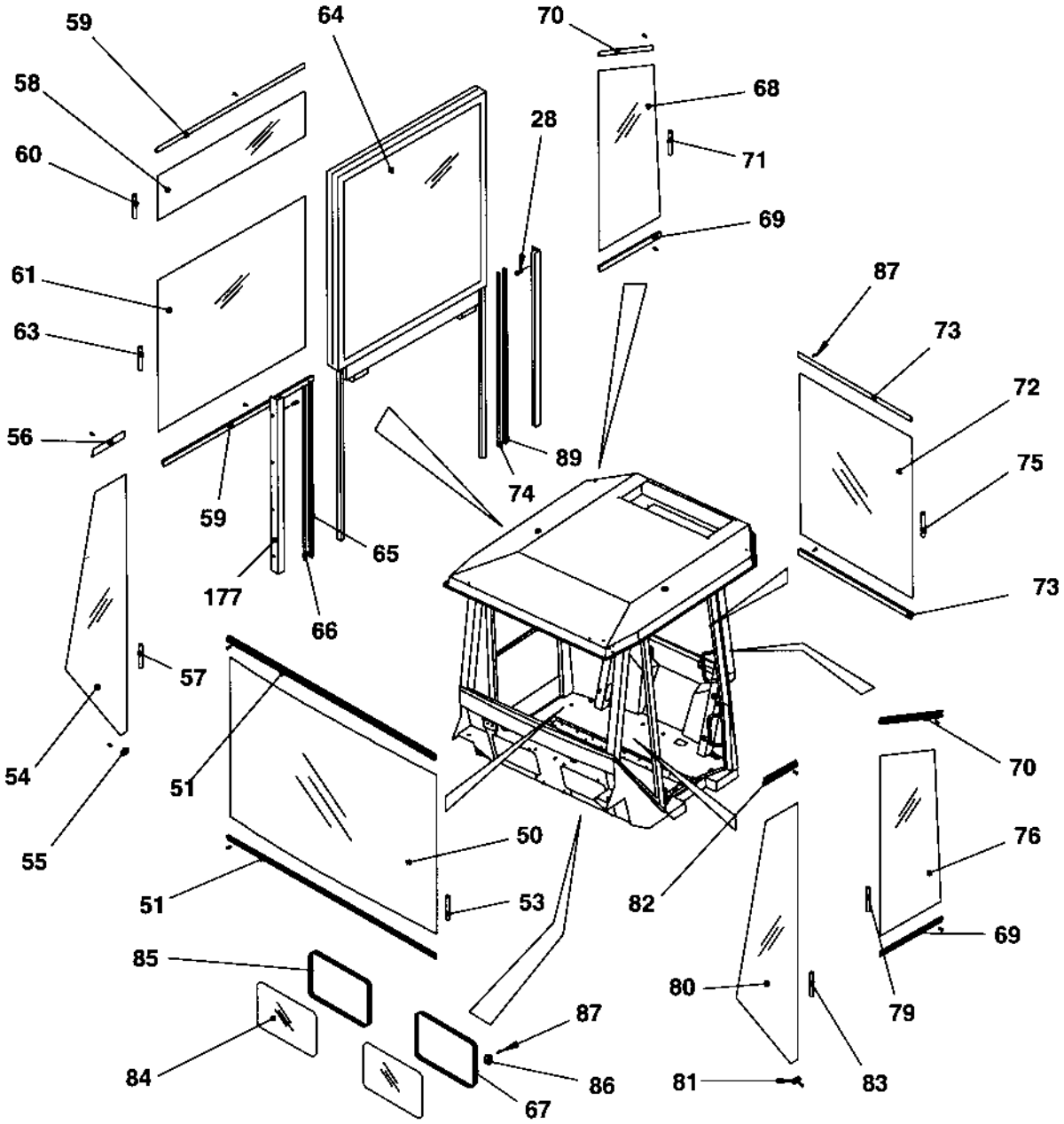

Cab Screens

Ref. No.	Part No.	Rem.	Qty	Description	Code
			1	Cab, cpl	
28	901315		8	.Screw	
50	937395		1	.Front screen	Green
51	908546		2	.List	
53	938834	A	1XL	.Sealing strip	
54	938616		1	.Screen	Green
55	938839		1	.List	
56	938840		1	.List	
57	938834	B	1XL	.Sealing strip	
58	938614		1	.Screen	Green
59	938841		2	.List	
60	938834	C	1XL	.Sealing strip	
61	938613		1	.Screen	Green
63	938834	A	1XL	.Sealing strip	
64	938612		1	.Screen	Green
65	908573	D	1XL	.Sealing	
66	908574	D	1XL	.Sealing	
67	938837	E	1XL	.Sealing strip	
68	938615		1	.Screen	Green
69	908556		2	.List	
70	938836		2	.List	
71	938834	F	1XL	.Sealing strip	
72	937403		1	.Screen	Green
73	908764		2	.List	
74	908573	D	1XL	.Sealing	
75	938834	A	1XL	.Sealing strip	
76	938566		1	.Screen	Green
79	938834	G	1XL	.Sealing strip	
80	937405		1	.Screen	Green
81	908993		1	.List	
82	908557		1	.List	
83	938834	B	1XL	.Sealing strip	
84	938567		2	.Screen	Green
85	938837	E	1XL	.Sealing strip	
86	938838		8	.List	
87	937932		48	.Screw	
89	908574	D	1XL	.Sealing	
177	908575		2	.Slide bar	

A) L=1,8 m
B) L=3,0 m
C) L=1,0 m
D) L=1,4 m
E) L=1,3 m
F) L=2,5 m
G) L=2,1 m

Cab Inside panels

17614

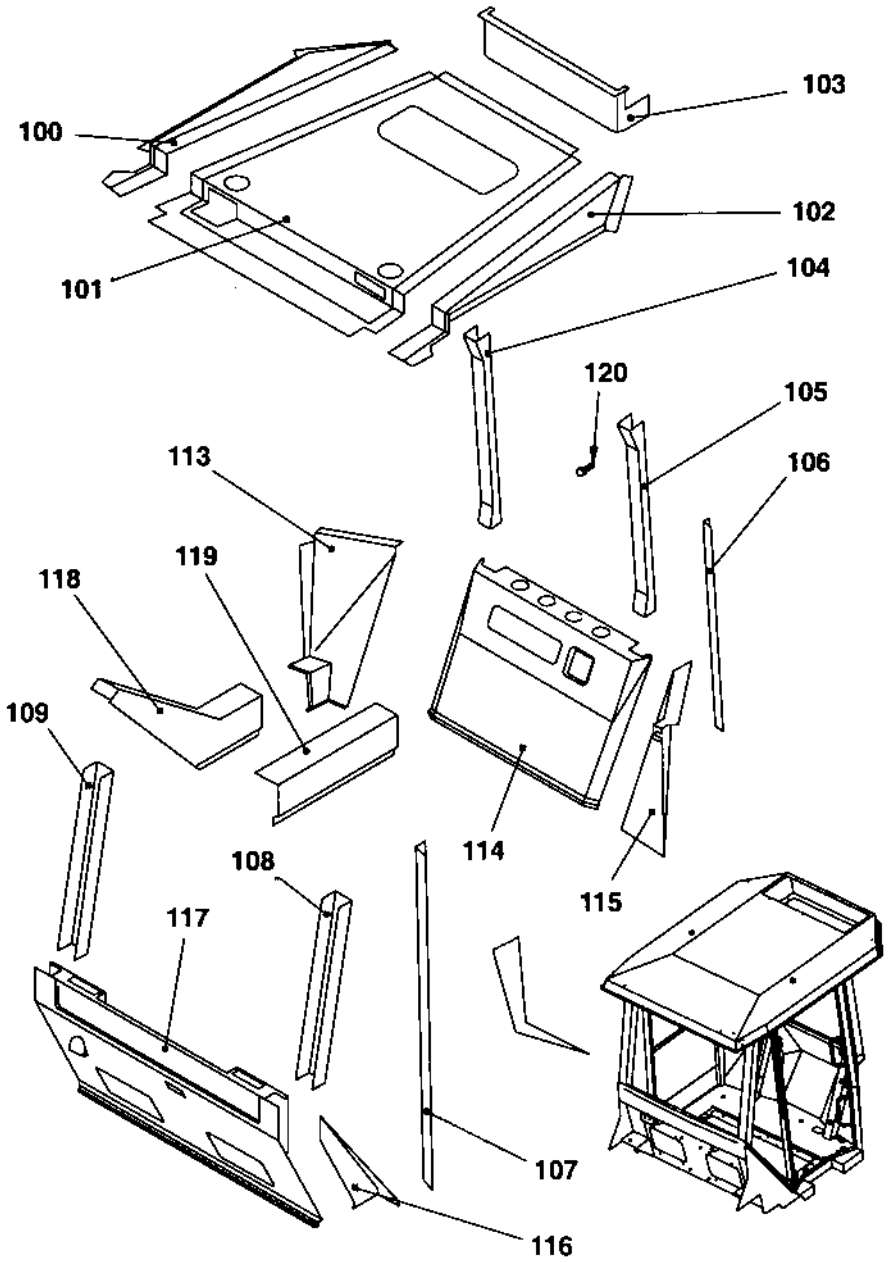

Cab Inside panels

Ref. No.	Part No.	Rem.	Qty	Description	Code
			1	Cab, cpl	
100	938814		1	.Panel	
101	938807		1	.Panel	
102	938808		1	.Panel	
103	938809		1	.Panel	
104	938810		1	.Panel	
105	938811		1	.Panel	
106	908535		1	.Panel	
107	908536		1	.Panel	
108	908529		1	.Panel	
109	938815		1	.Panel	
113	938816		1	.Panel	
114	938812		1	.Panel	
115	908544		1	.Panel	
116	908537		1	.Panel	
117	938813		1	.Panel	
118	938817		1	.Panel	
119	938818		1	.Panel	
120	938677		50	.Screw	

Cab, equipment

18166

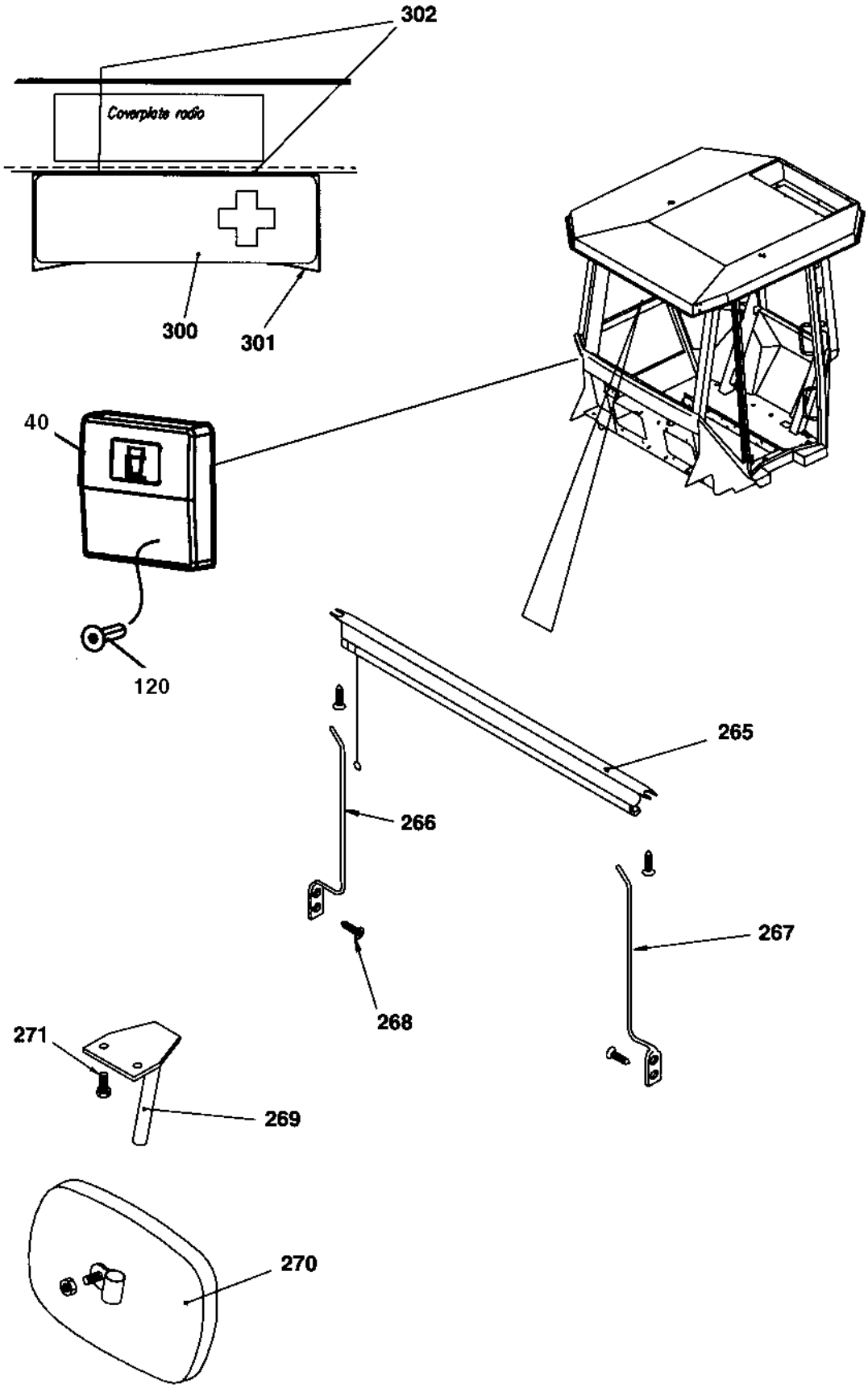

Cab, equipment

Ref. No.	Part No.	Rem.	Qty	Description		Code
				Cab, cpl		
40	377255		1	.Cup holder		
120	938677		6	.Screw		
265	908356		1	.Sun curtain		
266	908358		1	.Bar		
267	908357		1	.Bar		
268	903803		4	.Screw		
269	908623		1	.Bracket		
270	908624		1	.Rear mirror		
271	513008		1	.Screw		
300	902508		1	First aid kit		
301	371837		1	Holder		
302	903969		4	Screw	ST4,8x19 Black	

Cab, water tank wipers

15870

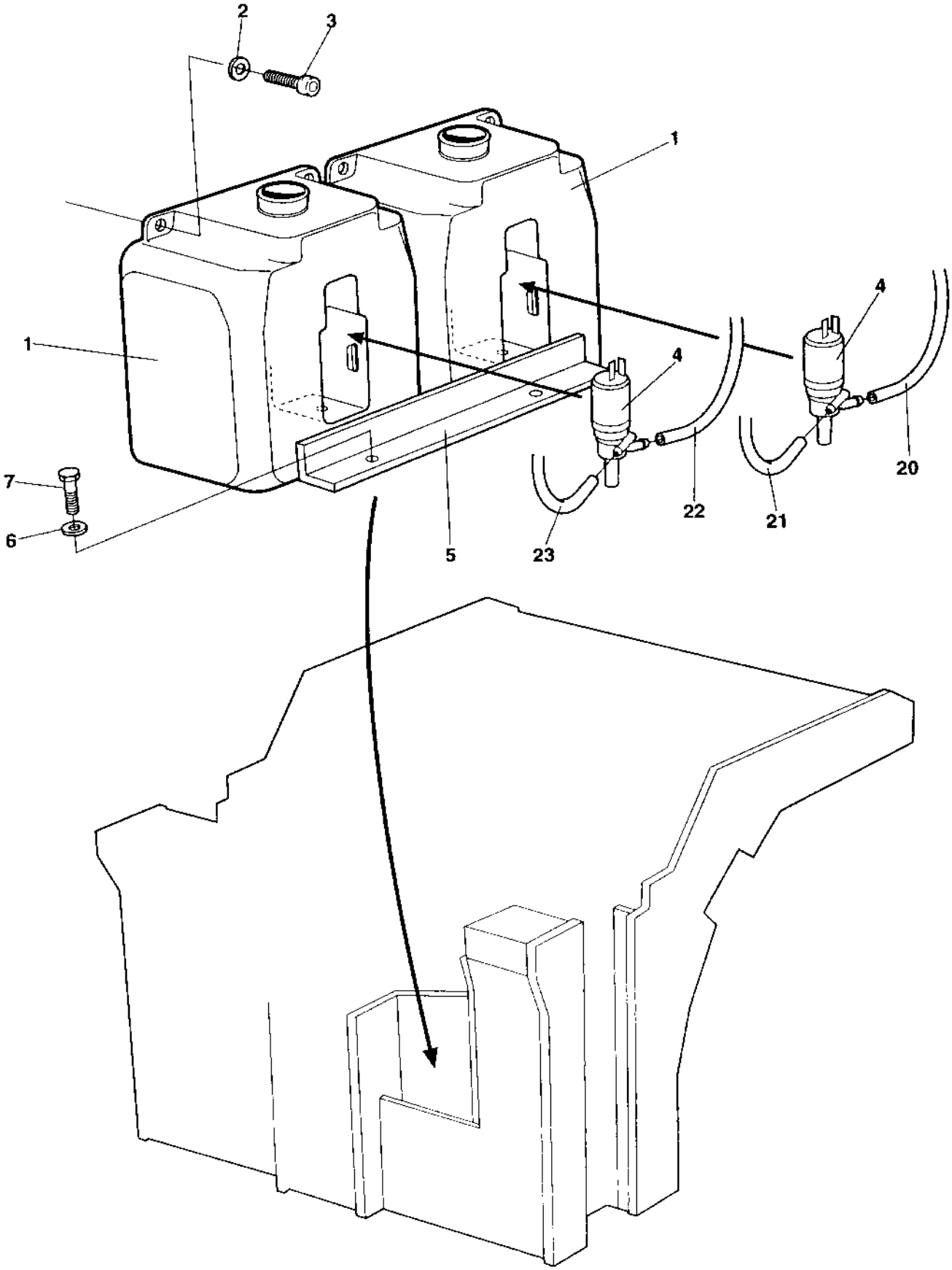

Cab, water tank wipers

Ref. No.	Part No.	Rem.	Qty	Description	Code
1	900998	A,1	2	Water reservoir	
	900998	A,2	1	Water reservoir	
2	904228	1	4	Washer	
	904228	2	2	Washer	
3	500075	1	4	Screw	M6-1,0x25 8.8
	500075	2	2	Screw	M6-1,0x25 8.8
4	900999	1	2	Pump	
	900999	2	1	Pump	
5	371960		1	Bracket	
6	904228		2	Washer	
7	500013		2	Screw	M6-1x16 8,8
20		B	1	Hose	
21		C	1	Hose	
22		D	1	Hose	
23		E	1	Hose	

1) Valid for asymmetric cab.
2) Valid for symmetric cab.
A) Windshield washer
B) Forward center
C) Rear center
D) Forward right
E) Rear right

Exterior rear mirrors

15777

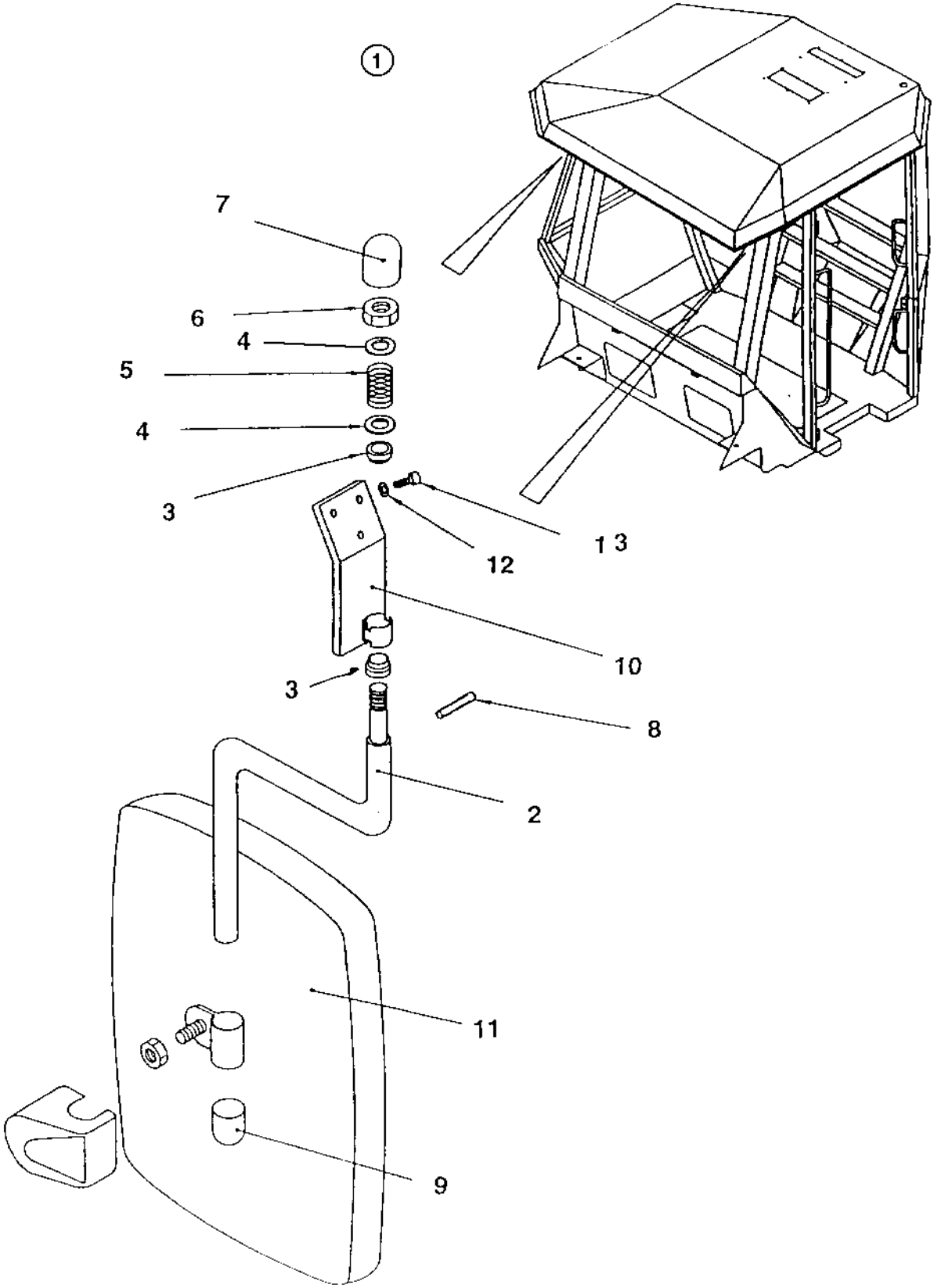

Exterior rear mirrors

Ref. No.	Part No.	Rem.	Qty	Description		Code
1	371730	A	1	Rear view mirror, cpl		
2	908355		1	.Arm		
3	908625		2	.Sleeve		
4	904232		2	.Washer	17x30x3	
5	908626		1	.Spring		
6	586021		1	.Nut	M16	
7	908627		1	.Cap		
8	629066		1	.Spirol pin		
9	908623		1	.Bracket		
10	908361		1	.Bracket		
11	908265		1	.Rear view mirror		
12	904229		6	Washer		
13	500019		6	Screw		

A) Option

Radio and cassette/cd player

17972

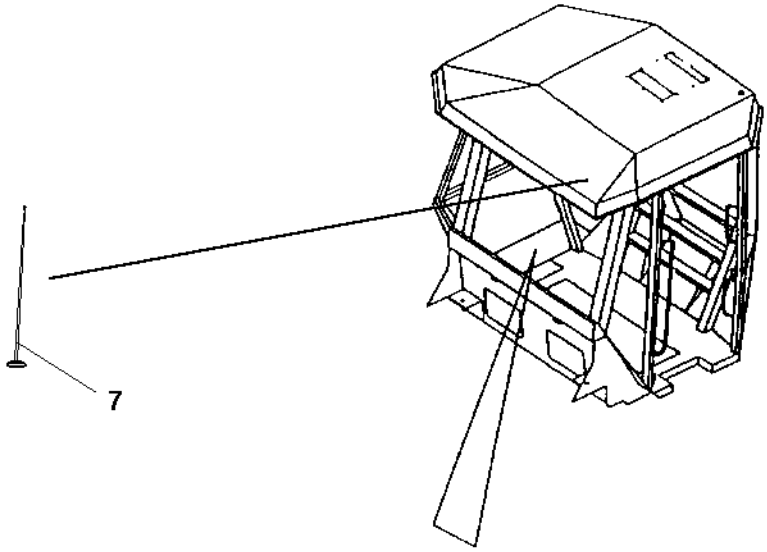

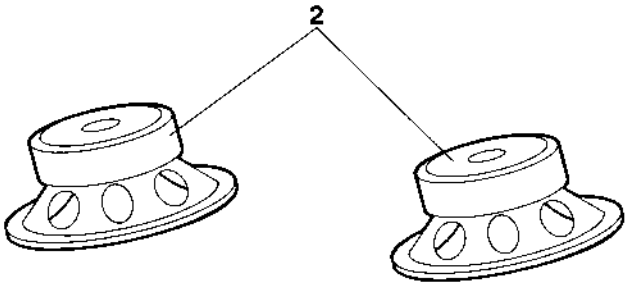

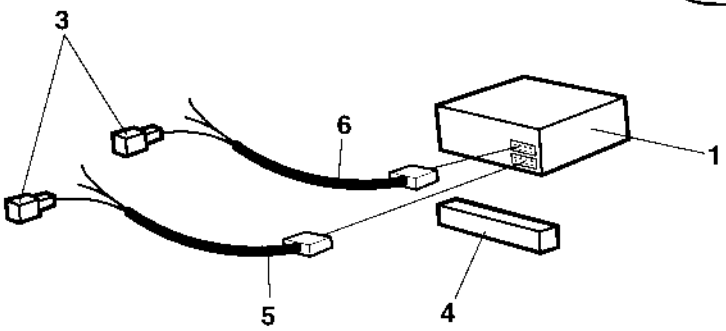

Radio and cassette/cd player

Ref. No.	Part No.	Rem.	Qty	Description	Code
1	904939		1	Radio and cassette player	
	791967		1	Radio and cd player	
2	791968	A	1	Loud speakers	
4	202043	C	1XL	Rubber strip	
7	937165	1	1	Antenna	

1) Included in cab.
A) 2 pcs
C) L=0,2 m

Decals

Ref. No.	Part No.	Rem.	Qty	Description	Code
1				Plates and decals (Page 228)	

Plates and decals

18479

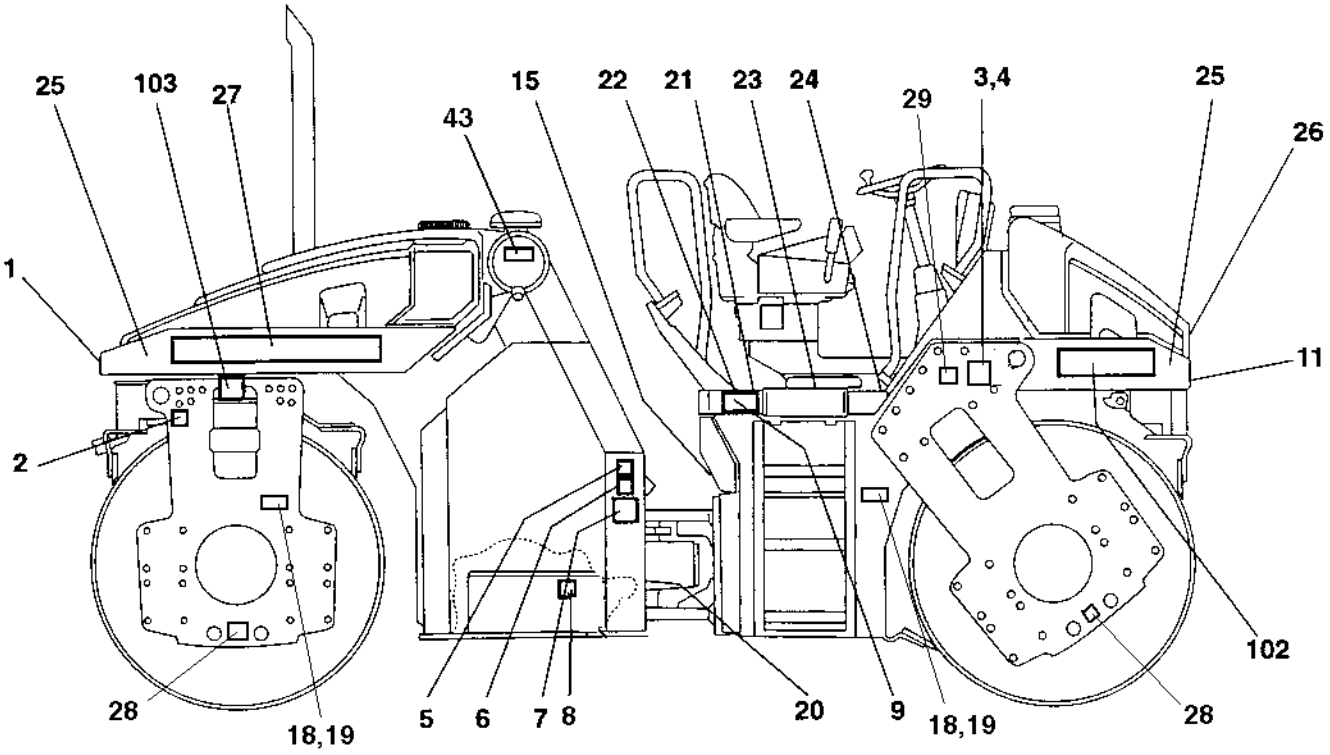

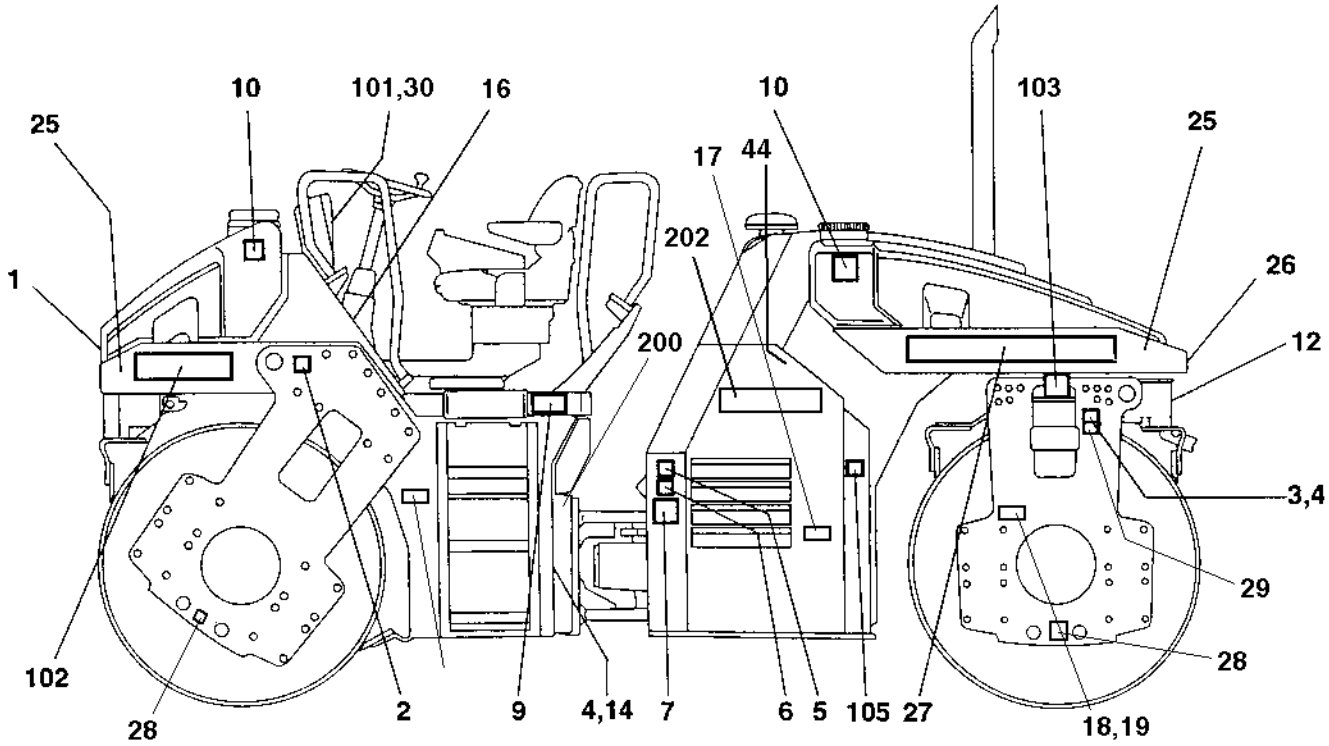

Plates and decals

Ref. No.	Part No.	Rem.	Qty	Description		Code
1	904092		2	Decal "DYNAPAC"	L=590 mm	
2	357587		2	Decal "LIFT POINT"		
3	904870		2	Lifting sign		
4	624005		12	Blind rivet	3,2x6,1	
5	903424	B	2	Decal "HOT SURFACE"		
6	903423	C	2	Decal "SAFETY"		
7	903422	D	2	Decal "SAFETY"		
8	272372		1	Decal "HYDRAULIC OIL"		
9	903459	E	2	Decal "SAFETY"		
10	991657		2	Decal "WATER"		
11	377743		2	Reflector, white		B
12	377742		2	Reflector, red		B
14			1	Product identification plate		B
			1	Product identification plate CE		B
15	991658		1	Decal "FUEL"		
16	903425		1	Decal "SAFETY MANUAL"		
17	904835		1	Decal "BATTERY POWER"		
18	377744		4	Reflector, yellow		B
20	272373		1	Decal "HYDRAULIC OIL"		
21	370058	I	6	Protection		
22	370057	J	1	Slip protection		
23	370059	K	2	Slip protection		
24	370056	L	1	Slip protection		
25	370085	M	4XL	Decal "RED"	W=200 mm	
26	357592	M	2XL	Decal "RED"	W=148 mm	
27	904069		2	Decal "DYNAPAC"	L=760 mm	
28	382751		4	Decal "TIE DOWN POINT"		
29	908229		2	Safety decal		
30	624017		2	Blind rivet		
43	791642		1	Decal "WARNING"	Use of starting fluid prohib.	
44	392919		1	Decal "Brake release, hand pump"		
101	386084SE		1	Warning plate	Swedish	
	386084EN		1	Warning plate	English	
	386084DE		1	Warning plate	German	
	386084IT		1	Warning plate	Italian	
	386084ES		1	Warning plate	Spanish	
	386084FR		1	Warning plate	French	
	386084NO		1	Warning plate	Norwegian	
	386084DK		1	Warning plate	Danish	
	386084FI		1	Warning plate	Finnish	
	386084PT		1	Warning plate	Portuguese	
	386084NL		1	Warning plate	Dutch	
	386084GR		1	Warning plate	Greek	
	386084IS		1	Warning plate	Icelandic	
	386084CN		1	Warning plate	Chinese	
	386084BR		1	Warning plate	Brazil	
102	791782		2	Decal "MODEL CODE"	CC222HF	
103	355983		2	Decal "TYRE PRESSURE"	200kPa/29psi	
105	903422	D,W	1	Decal "SAFETY"		
200	791276		1	Decal "Sound power level"	106dB	

B) Hot surface
C) Engine fan
D) Hazard area
E) Read instruction manual
I) Small
J) Rear
K) Middle
L) Front
M) Length as required
W) With offset drum

Plates and decals

18479

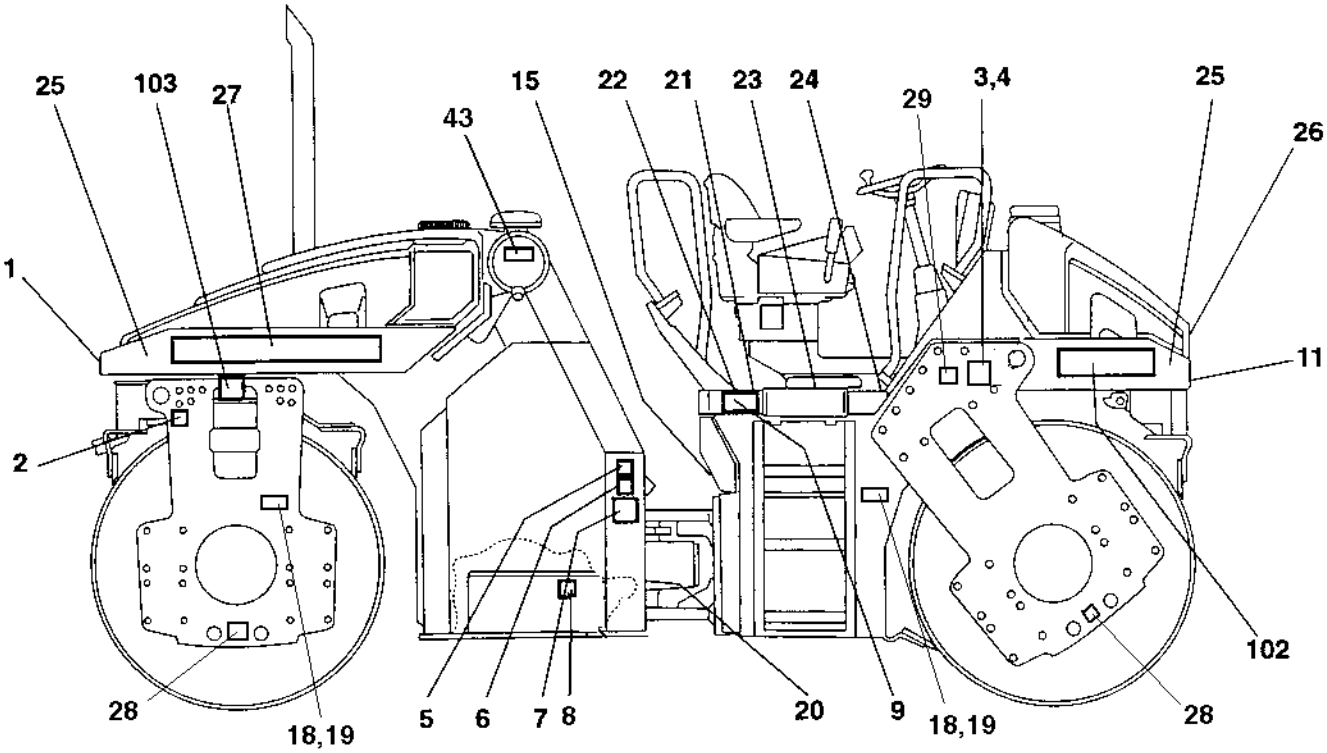

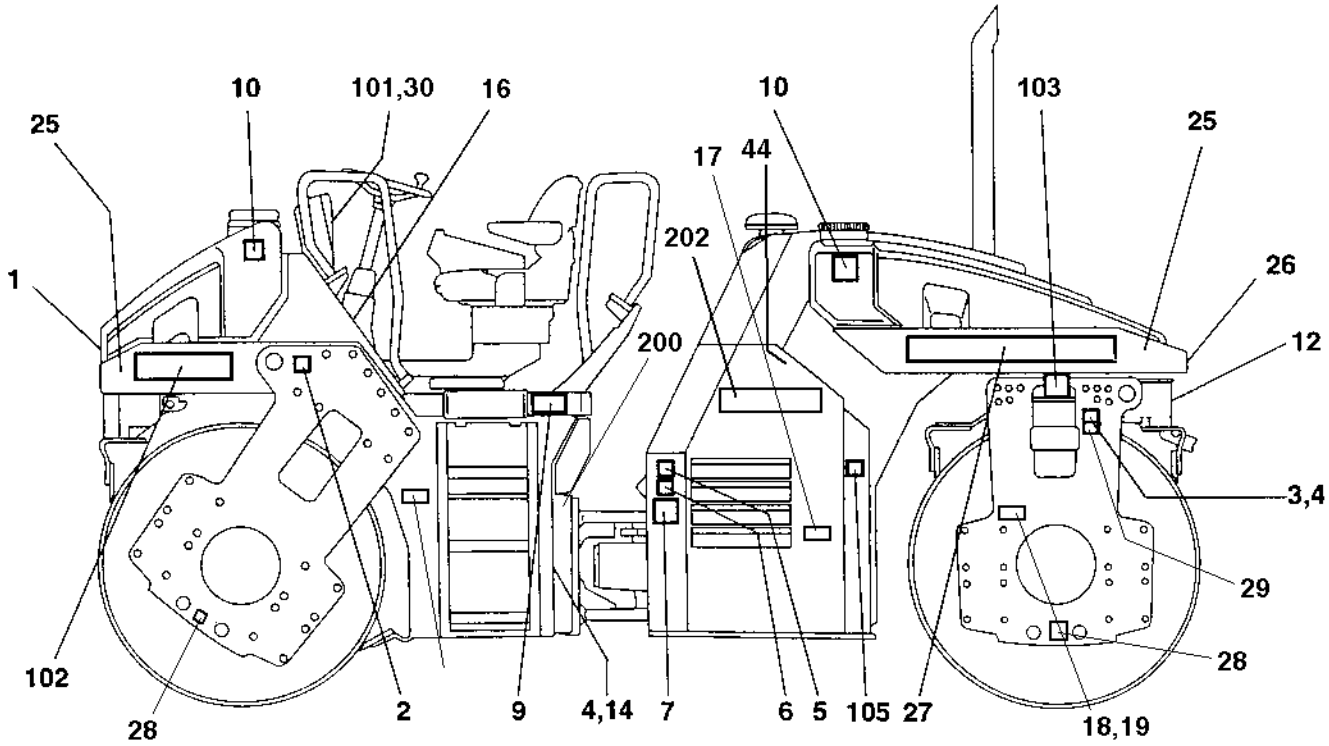

Ref. No.	Part No.	Rem.	Qty	Description	Code
202	379319		1	Decal "Asphalt temp meter"	

Standard equipment

Ref. No.	Part No.	Rem.	Qty	Description	Code
1				Standard equipment (Page 234)	

Standard equipment

15639-1

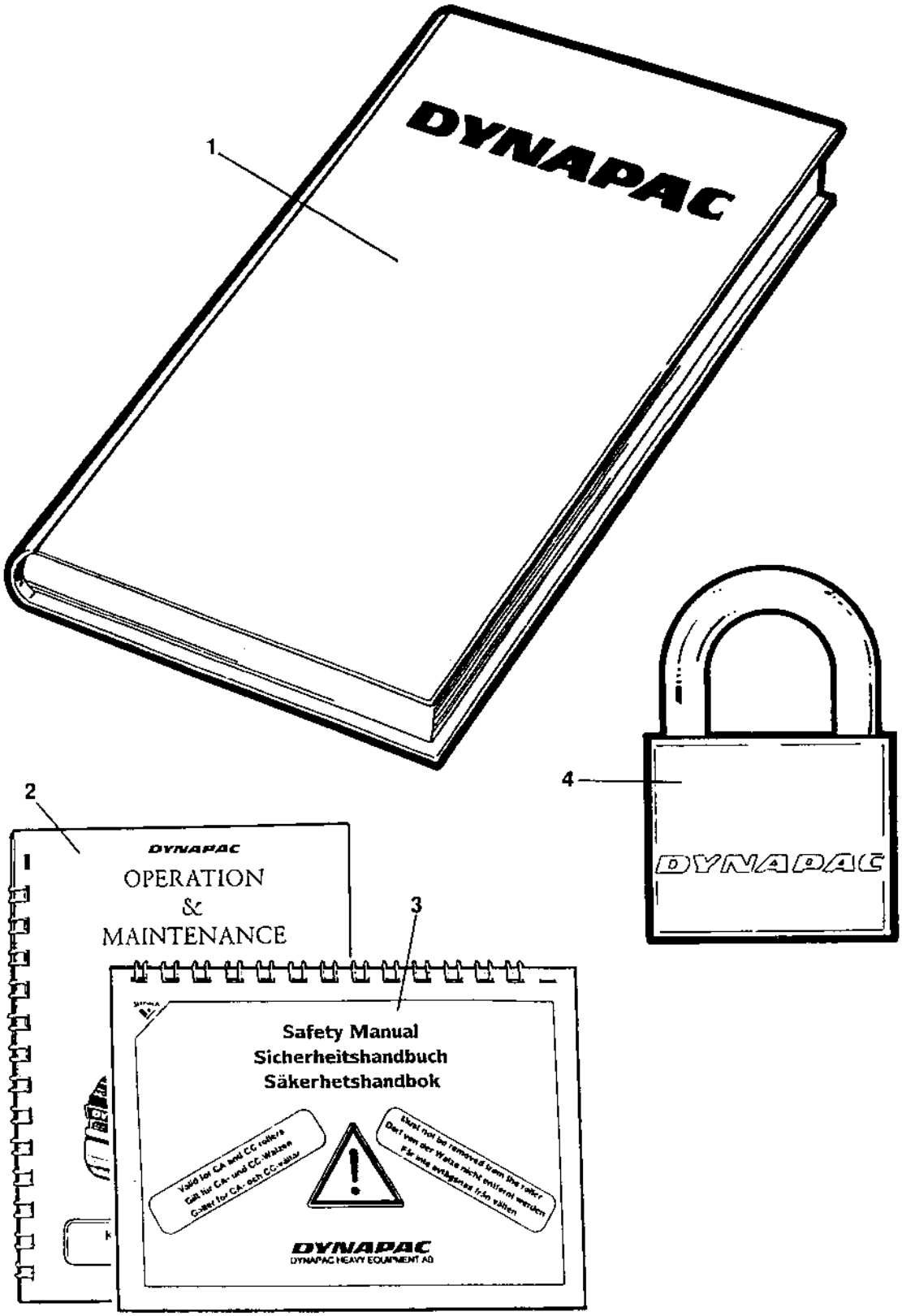

Standard equipment

Ref. No.	Part No.	Rem.	Qty	Description	Code
1			1	Documentation	CC222CHF
			1	.Warranty registration card	
			1	.Operation instruction	
			1	.Maintenance instruction	
			1	.Spare parts catalogue	SCC222CHF
			1	.Instruction manual	Deutz BF4L 2011/TD 2011 L04 I
2			1	.Operation / maintenance instruction	A5
3			1	.Safety manual	RSAFE
4	358881		1	Pad lock	

Optional equipment

Ref. No.	Part No.	Rem.	Qty	Description	Code
10				Eyelet (Page 238)	
15				SMV-sign, Plate holder (Page 240)	
50				Air conditioner assembly (Page 242)	
110				Roof hatch (Page 250)	
120				Tool equipment (Page 252)	
200				Edge cutter, cpl (Page 254)	
300				Asphalt temperature meter (Page 264)	

Eyelet

15714-1

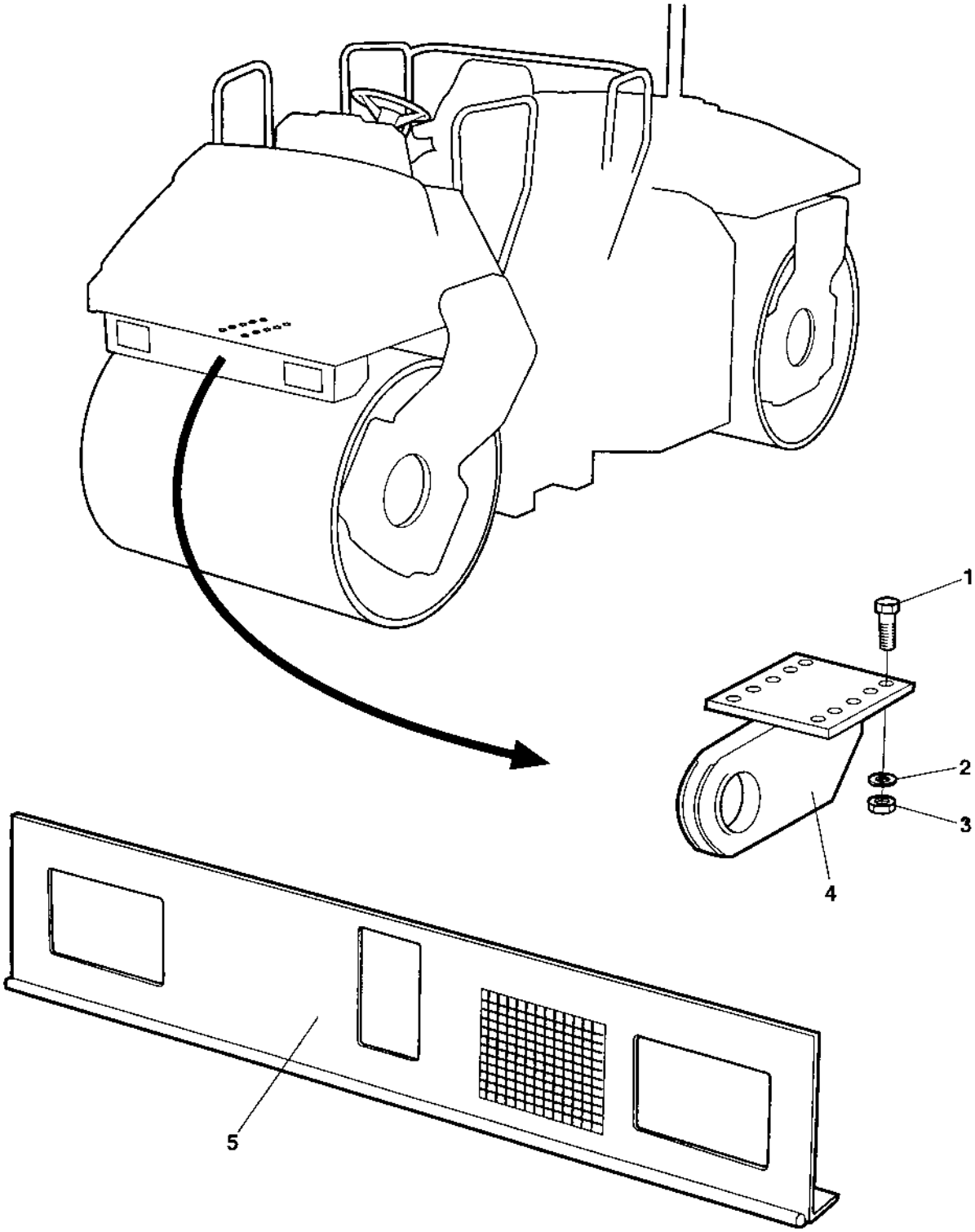

Eyelet

Ref. No.	Part No.	Rem.	Qty	Description		Code
1	947689		10	Screw		
2	904231		10	Washer	13x24x2	
3	928849		10	Nut	M12-1,75	
4	371221	A	1	Eyelet		
	373936	B	1	Eyelet		
5	385340		1	Cover		

A) Standard, L=241 mm
B) Option, L=305 mm

SMV-sign, Plate holder

15872-1

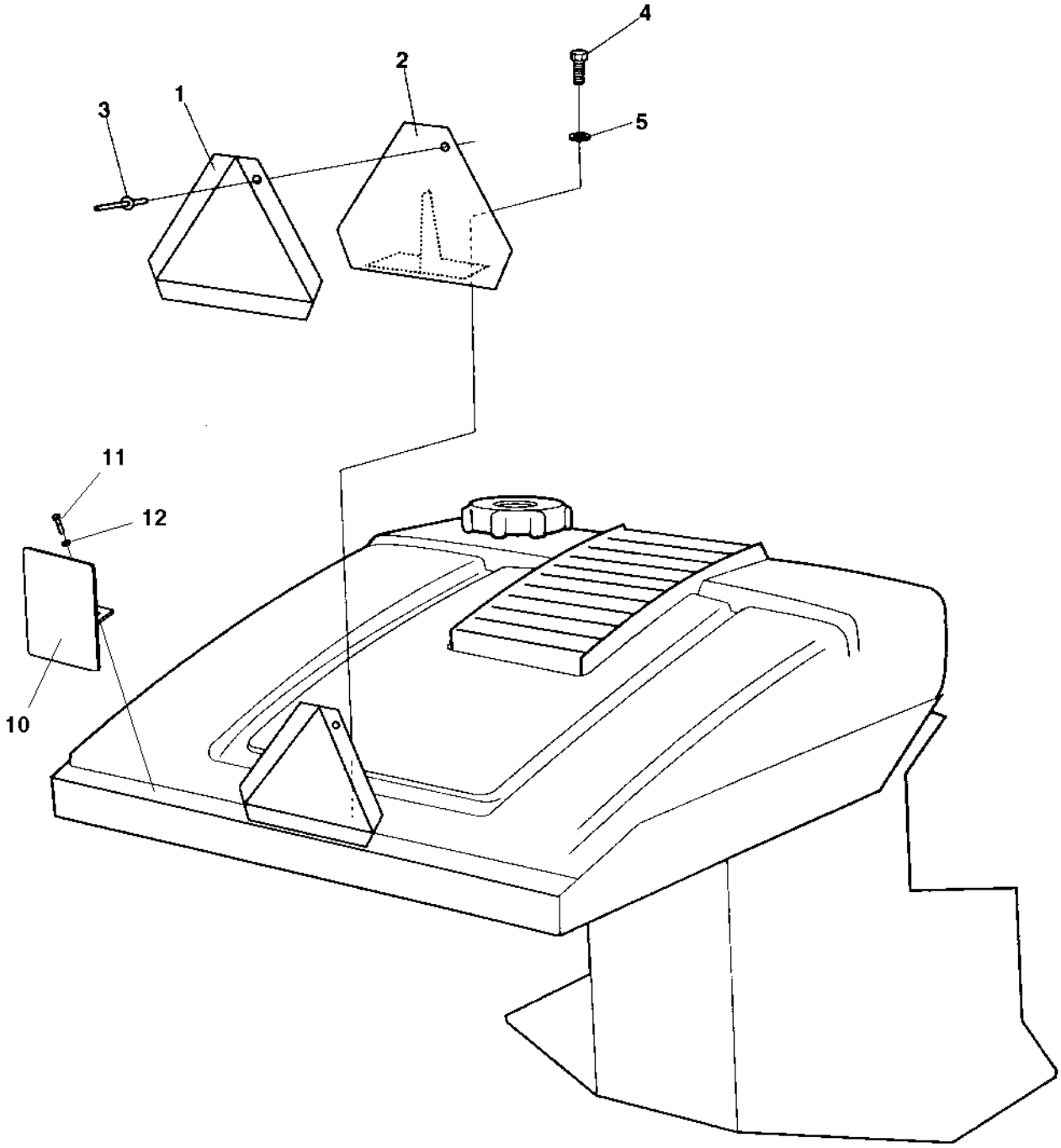

SMV-sign, Plate holder

Ref. No.	Part No.	Rem.	Qty	Description		Code
1	476019		1	SMV sign		D
2	370835		1	Sign holder		
3	624011		6	Pop rivet		
4	500019		2	Screw		
5	904229		2	Washer		
10	387381		1	Plate holder		
11	500047		2	Screw	M8-1,25x35 8,8	
12	904556		2	Washer	8,4x16x3,0	

Air conditioner assembly

18671

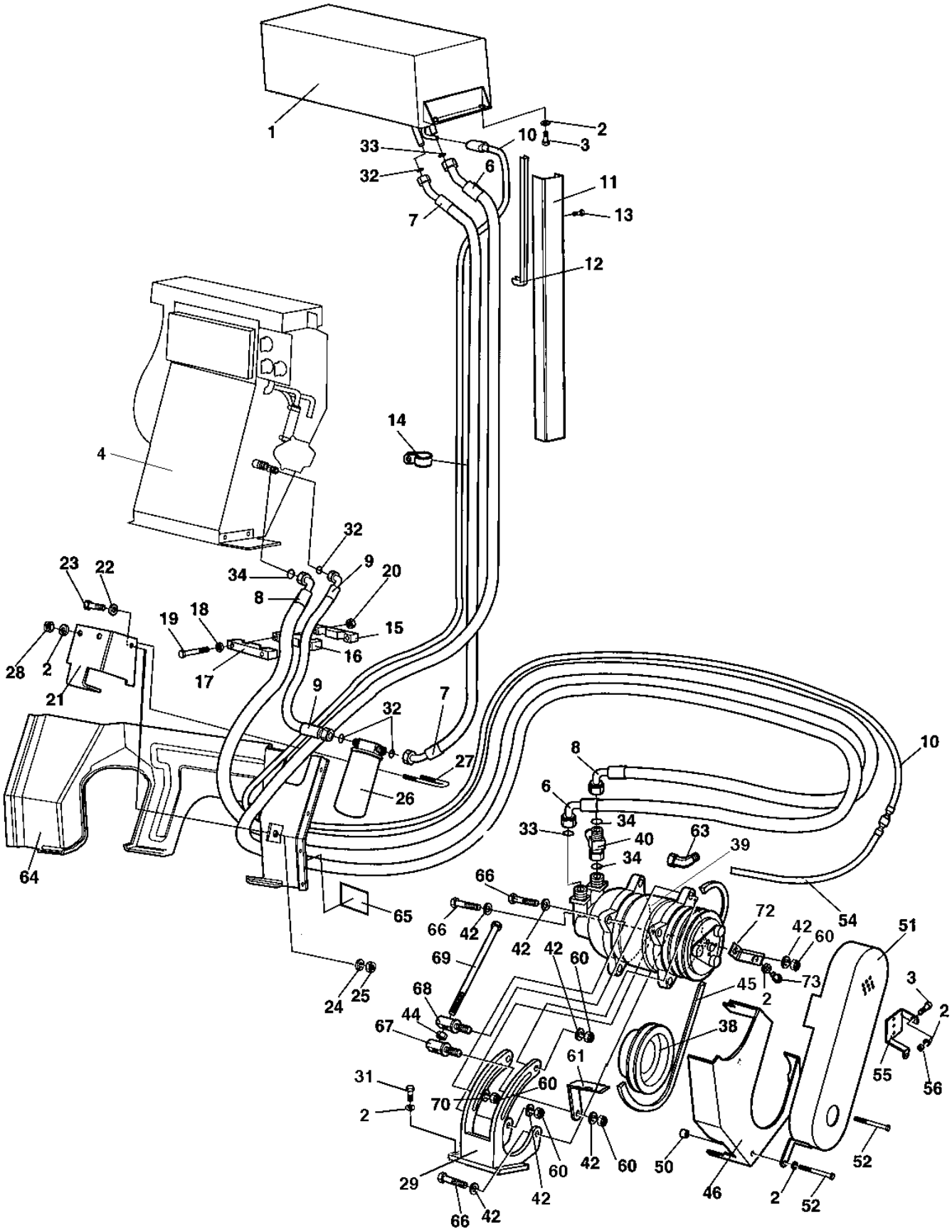

Air conditioner assembly

Ref. No.	Part No.	Rem.	Qty	Description		Code
1				Condensor assembly (Page 246)		
2	904229		14	Washer		
3	500022		7	Screw	M8-1,25x30 8,8	
4	385766		1	Heater/AC unit (Page 248)		
6	385905		1	Refrigerant hose		
7	385575		1	Refrigerant hose		
8	385906		1	Refrigerant hose		
9	385574		1	Refrigerant hose		
10	385908		1	Cable harness		
11	385163		1	Hose protection		
12	288128	A	1XL	Edge trim		
13	541703		7	Screw	M6x16	
14	921036		3	Clamp		
15	384672		1	Hose holder		
16	384673		1	Hose holder		
17	384674		1	Hose holder		
18	904228		2	Washer		
19	500292		2	Screw	M6x75	
20	904563		2	Lock nut	M6	
21	384145		1	Holder		
22	904231		2	Washer	13x24x2	
23	500049		1	Screw	M12-1,75x60 8.8	
24	357206		1	Washer		
25	586019		1	Lock nut	M12	
26	383424		1	Drying filter		
27	313093		1	Pipe clamp		
28	586003		3	Lock nut	M8	
29	379623		1	Compressor bracket		
30	904214		2	Washer	15x30x4	
31	508048		4	Screw	M08x030H 8.8	
32	384877		4	O-ring		
33	384878		2	O-ring		
34	384879		3	O-ring		
38	384141		1	Pulley		
39	384147		1	Compressor		
40	385909		1	Service fitting		
42	904230		10	Washer	10,5X22X2	
44	570006		1	Nut	M10	
45	413074		1	V-belt		B
46	384143		1	V-belt guard		
	396161	1	1	V-belt guard	Tier 3	
50	371767		2	Spacer		
51	384144		1	Belt guard		
52	500180		2	Screw	M8X110 8,8	
54	902173	B	1XL	Conduit		
55	385940		1	Fuse holder		
56	570005		1	Nut	M8	
60	791172		5	Lock nut	M10	
61	379843		1	Bracket		
63	801781		1	Connector		
64	386055		1	Cover		
65	904165		1	Safety decal	Toxic gases	
66	500031		3	Screw	M10-1,5x40 8,8	
67	379811		1	Set screw		
68	379812		1	Set screw		
69	791665		1	Screw		

1) Valid for machines with Tier 3 engine, Deutz TD2011 L04I
A) L= 0,24 m
B) L= 0,2 m

Air conditioner assembly

18671

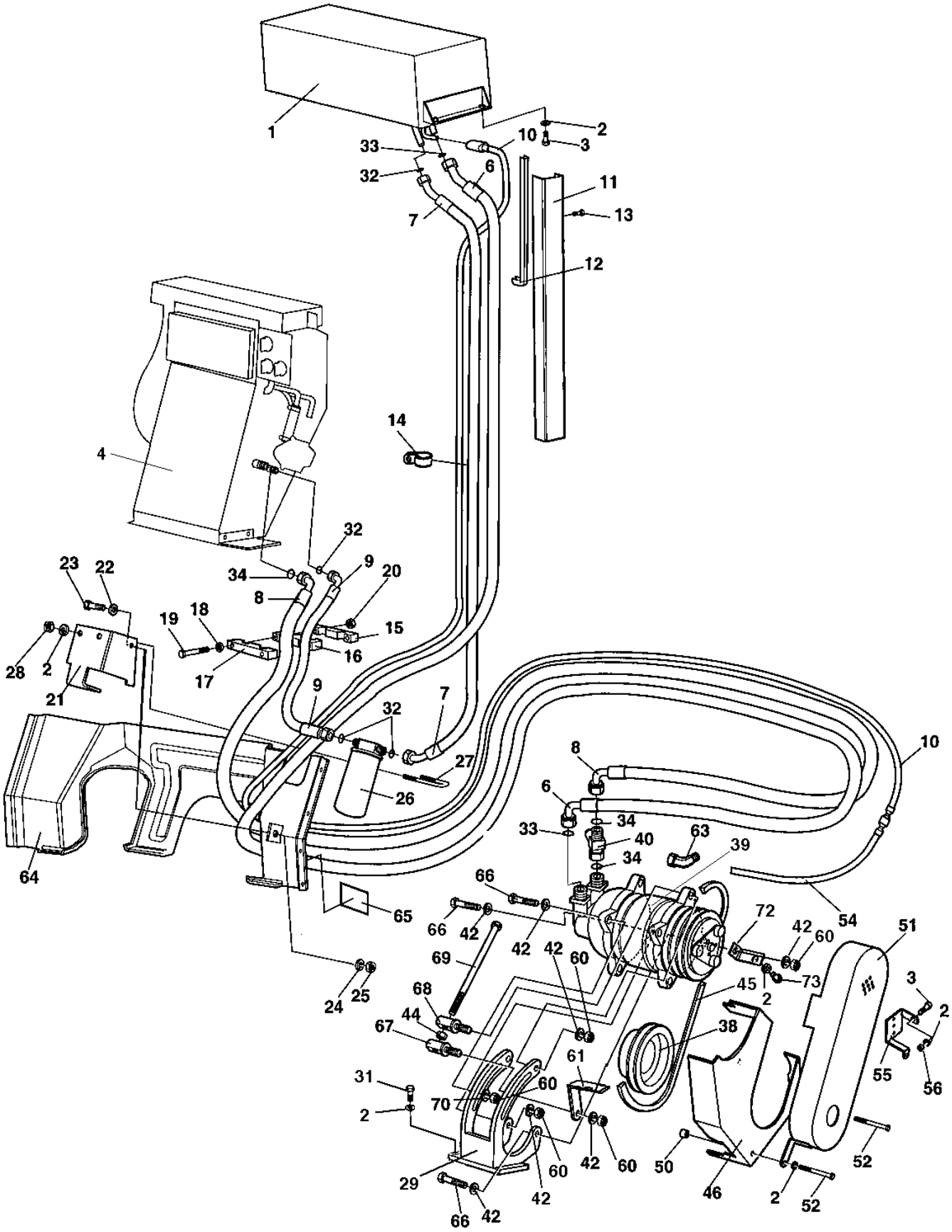

Air conditioner assembly

Ref. No.	Part No.	Rem.	Qty	Description		Code
70	904557		1	Washer	10,5x22x4	
72	372680		1	Bracket		
73	500019		1	Screw		

Condensor assembly

17676-1

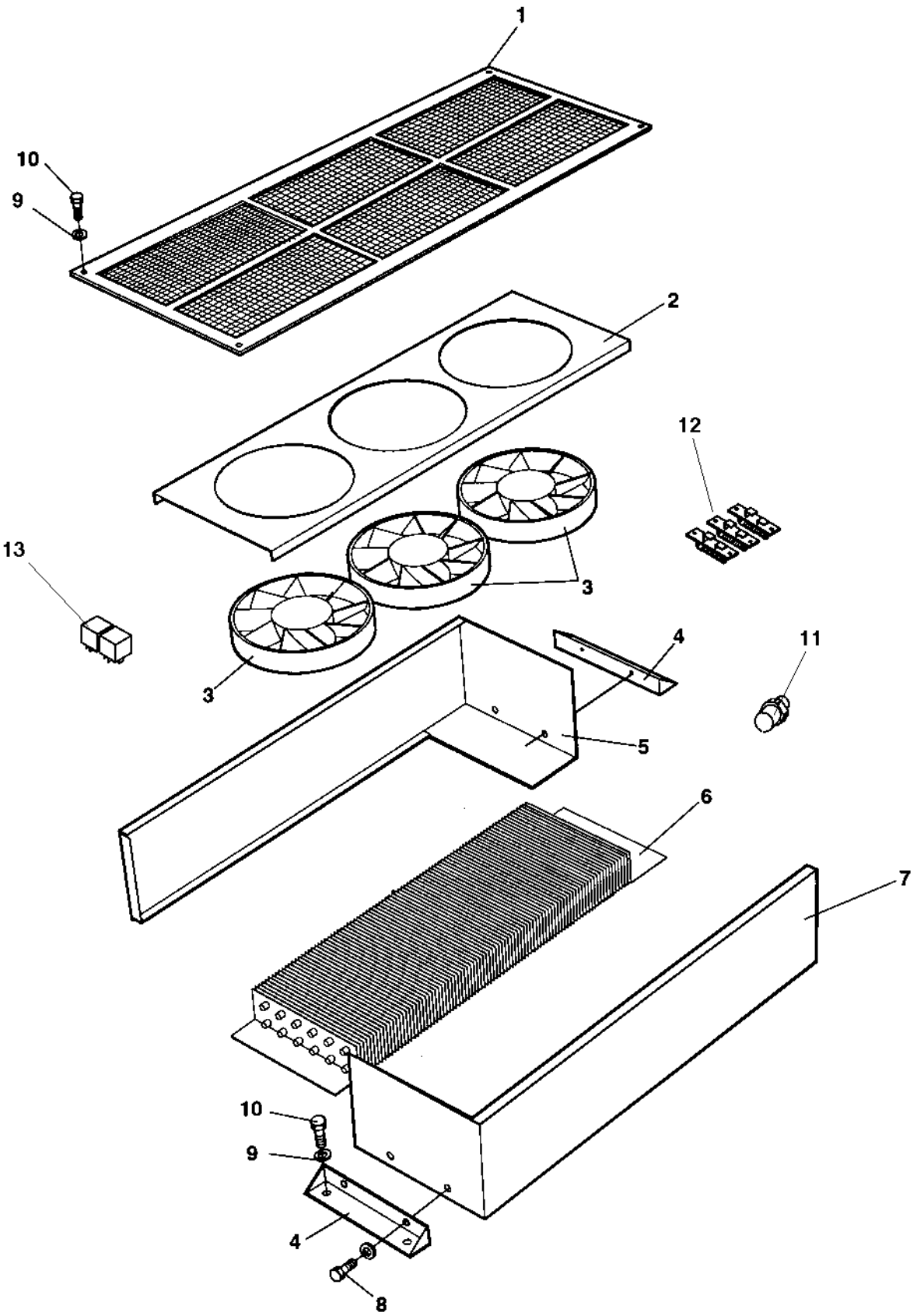

Condensor assembly

Ref. No.	Part No.	Rem.	Qty	Description		Code
1	384589		1	Cover		
2	938599		1	Fan bracket		
3	938603		3	Fan		
4	938600		2	Condensor bracket		
5	938598		1	Cover		
6	938602		1	Condensor Coil		
7	938597		1	Cover		
8	901832		4	Screw	M8x16	
9	500022		6	Screw	M8-1,25x30 8,8	
10	904229		6	Washer		
11	938605		1	Pressure switch		
12	938606		3	Resistor		
13	287598		2	Relay	12V-30A	

385766 Heater/AC unit

17705

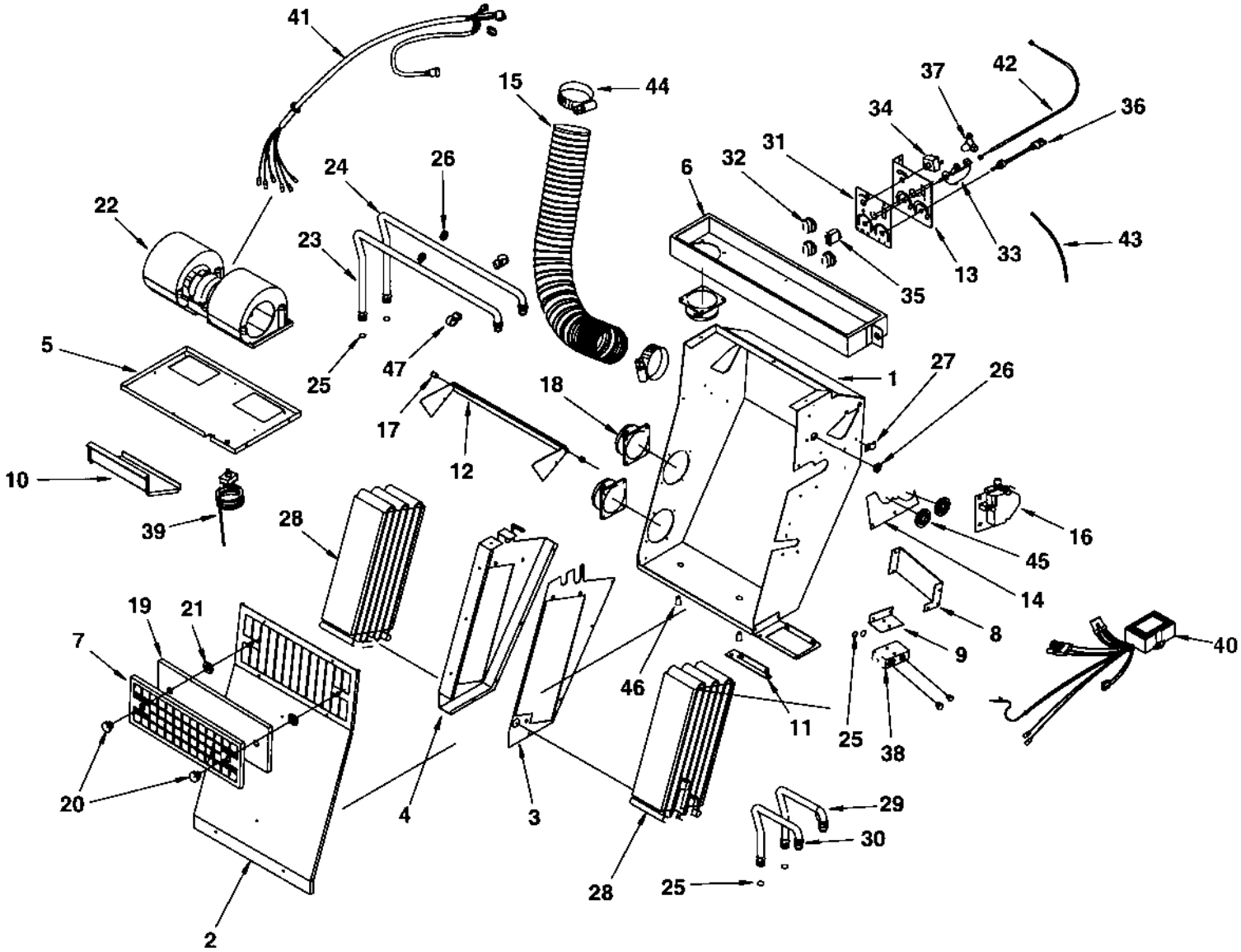

385766 Heater/AC unit

Ref. No.	Part No.	Rem.	Qty	Description	Code
1	938938		1	Casing	
2	938939		1	Cover	
3	938940		1	Coil bracket	
4	938941		1	Coil bracket	
5	938942		1	Blower bracket	
6	938943		1	Air distributor	
7	385590		1	Filter grill	
8	938944		1	Heater valve bracket	
9	384835		1	Bracket	
10	938945		1	Air channel	
11	938779		1	Hose bracket	
12	938780		1	Flapper	
13	938781		1	Control panel	
14	938946		1	Cover plate	
15	938783		1	Air duct	
16	384136		1	Heater valve	
17	938784		2	Bushing	
18	938632		3	Hose adapter	
19	385589		1	Recirculation filter	
20	938643		2	Plug	
21	938611		2	Star lock	
22	938638		1	Fan	
23	938947		1	Copper tube	
24	938948		1	Copper tube	
25	384878		6	O-ring	
26	384927		5	Grommet	
27	384880		1	Wire clamp	
28	384133		2	Coil	
29	385576		1	Copper tube	
30	385577		1	Copper tube	
31	938787		1	Overlay	
32	938620		3	Knob	
33	938788		1	Rotary control	
34	938622		1	Switch	
35	938619		1	Switch	
36	938623		1	Potentiometer	
37	938624		1	Sensor	
38	384176		1	Valve	
39	384897		1	Thermostat	
40	385907		1	Heater control	
41	938631		1	Cable harness	
42	385588		1	Bowden cable	
43	938637		1	Hose	
44	938789		2	Clamp	
45	938608		2	Grommet	
46	938636		2	Drain valve	
47	938790		2	Clamp	

Roof hatch

17374

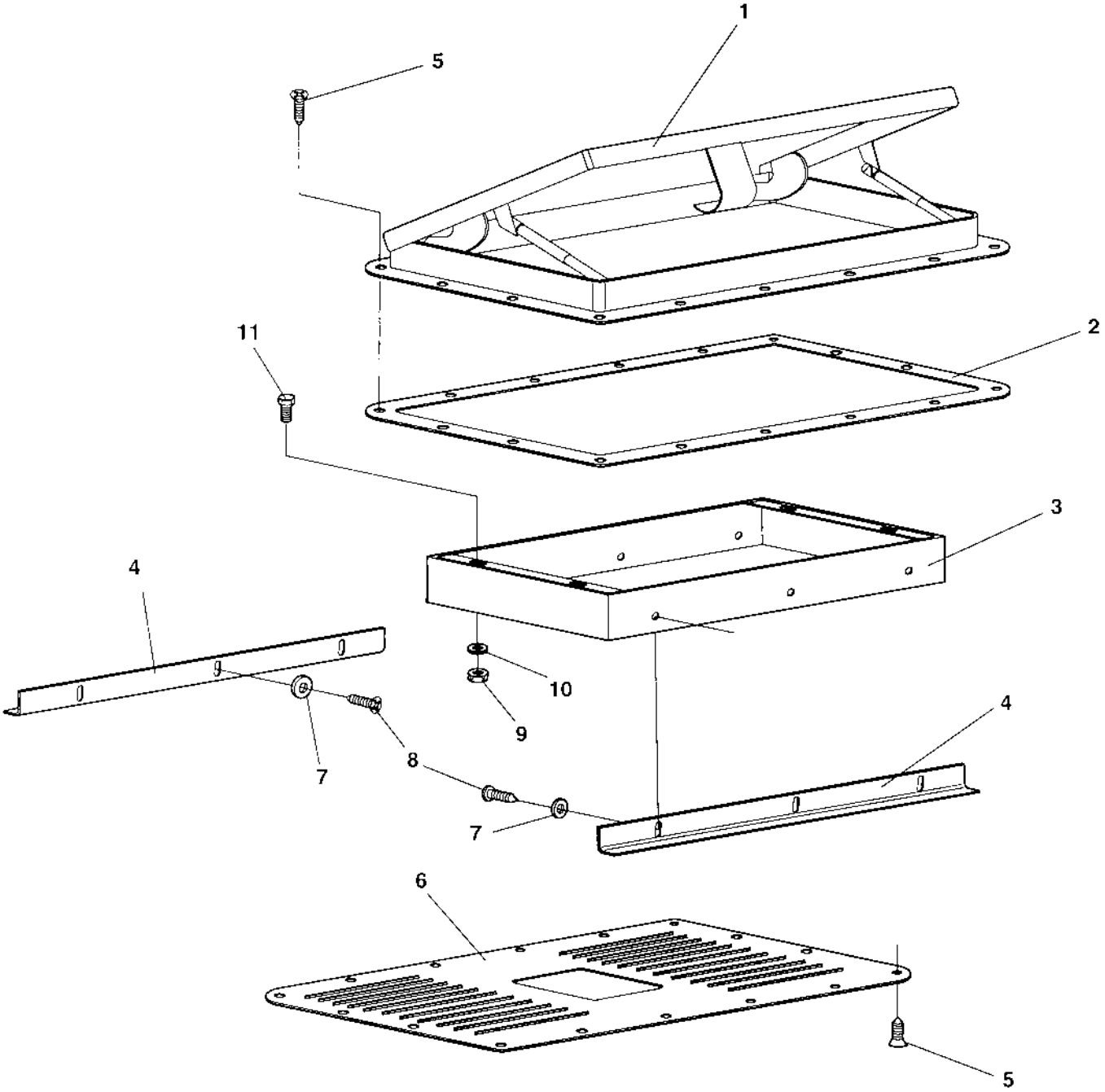

Roof hatch

Ref. No.	Part No.	Rem.	Qty	Description		Code
1	382702		1	Roof hatch		
	384958		1	Roof hatch		
2	382701		1	Gasket		
	384954		1	Support plate		
3	382699		1	Inner roof insert		
4	383002		2	Inner roof holder		
5	904906		32	Screw		
6	382700		1	Inner cover		
7	601001		6	Washer		
8	903852		6	Screw	ST4,2x13	
9	570004		4	Nut	M6	
10	904228		4	Washer		
11	500040		4	Screw	M6-1x20 8,8	

Tool equipment

18137

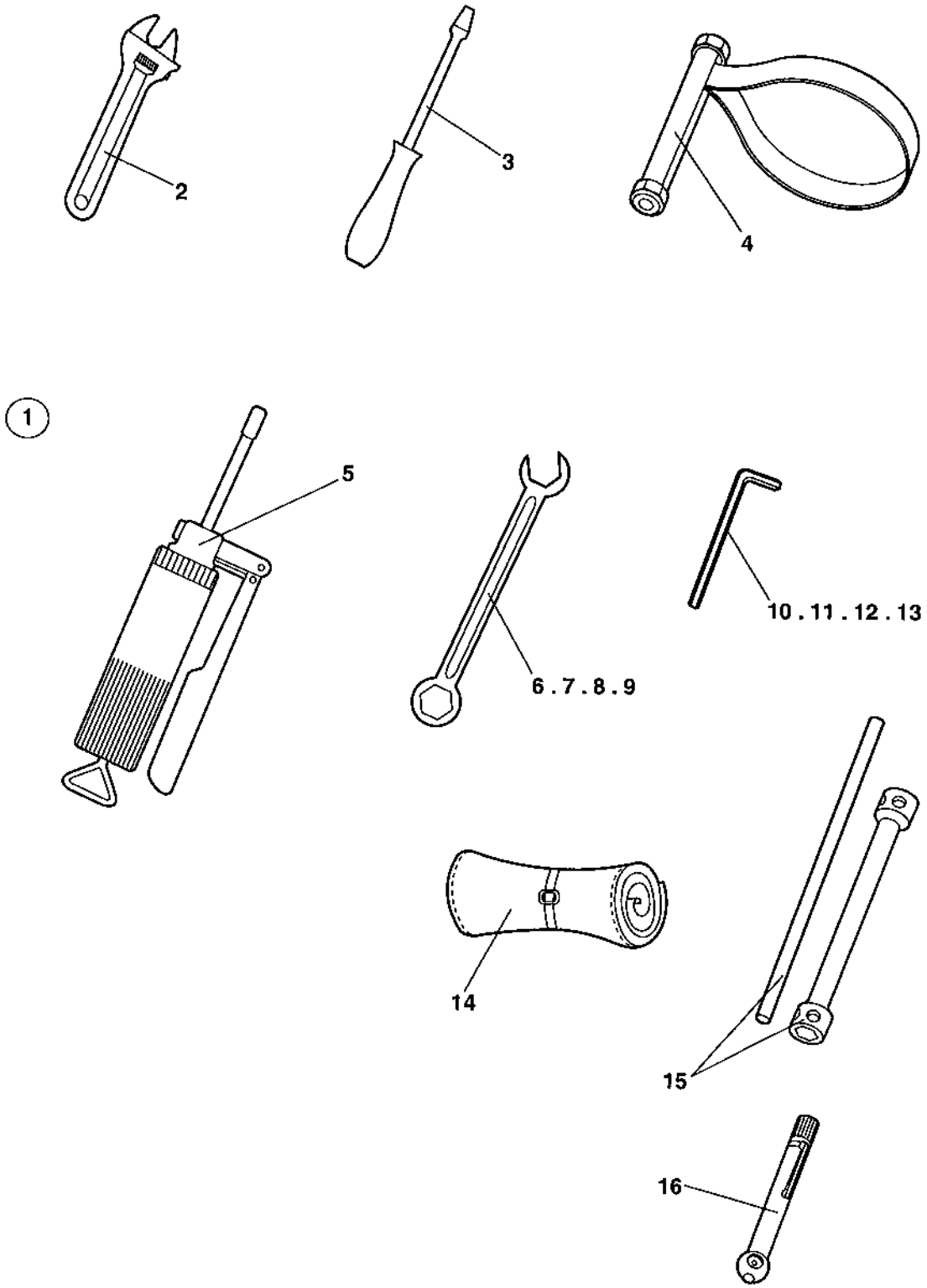

Tool equipment

Ref. No.	Part No.	Rem.	Qty	Description		Code
1	357952		1	Tool set Cpl		
2			1	.Adjustable wrench		
3			1	.Screw driver		
4	902610		1	.Belt pliers		
5	311016		1	.Grease gun		
6			1	.Open end spanner	10MM	
7			1	.Open end spanner	13MM	
8			1	.Open end spanner	16MM	
9			1	.Open end spanner	18MM	
10			1	.Allen wrench	10MM	
11			1	.Allen wrench	12MM	
12			1	.Allen wrench	6MM	
13			1	.Allen wrench	8MM	
14			1	.Tool bag		
15			1	.Wheel nut key	30/32MM	
16	901220		1	.Pressure gauge		

Edge cutter, cpl

15810

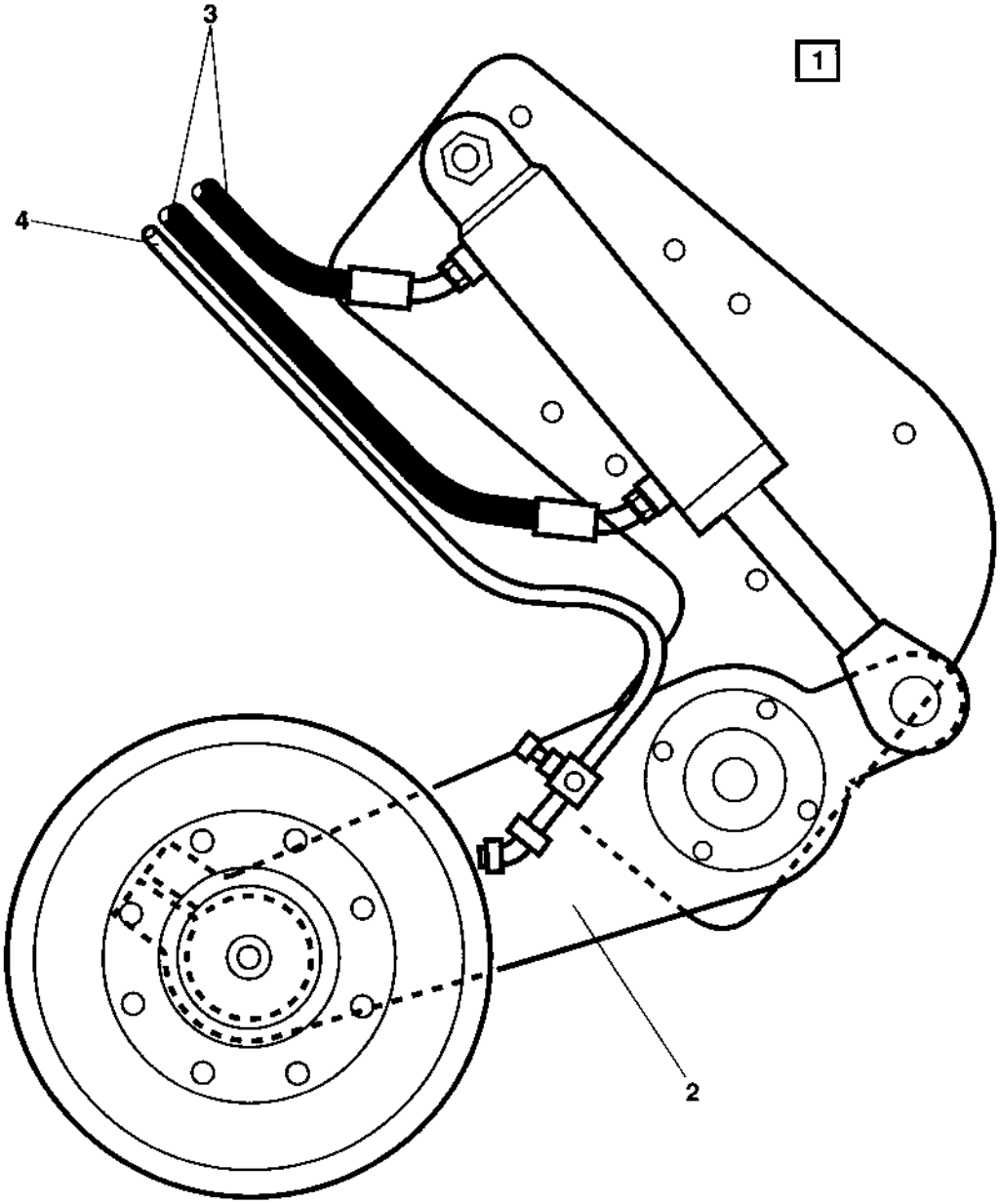

Edge cutter, cpl

Ref. No.	Part No.	Rem.	Qty	Description	Code
1			1		
2				Edge cutter (Page 256)	
3				Edge cutter (Page 258)	Hydraulics without offset
				Edge cutter (Page 260)	Hydraulics with offset
4				Edge cutter (Page 262)	Sprinkler system

Edge cutter

15847-1

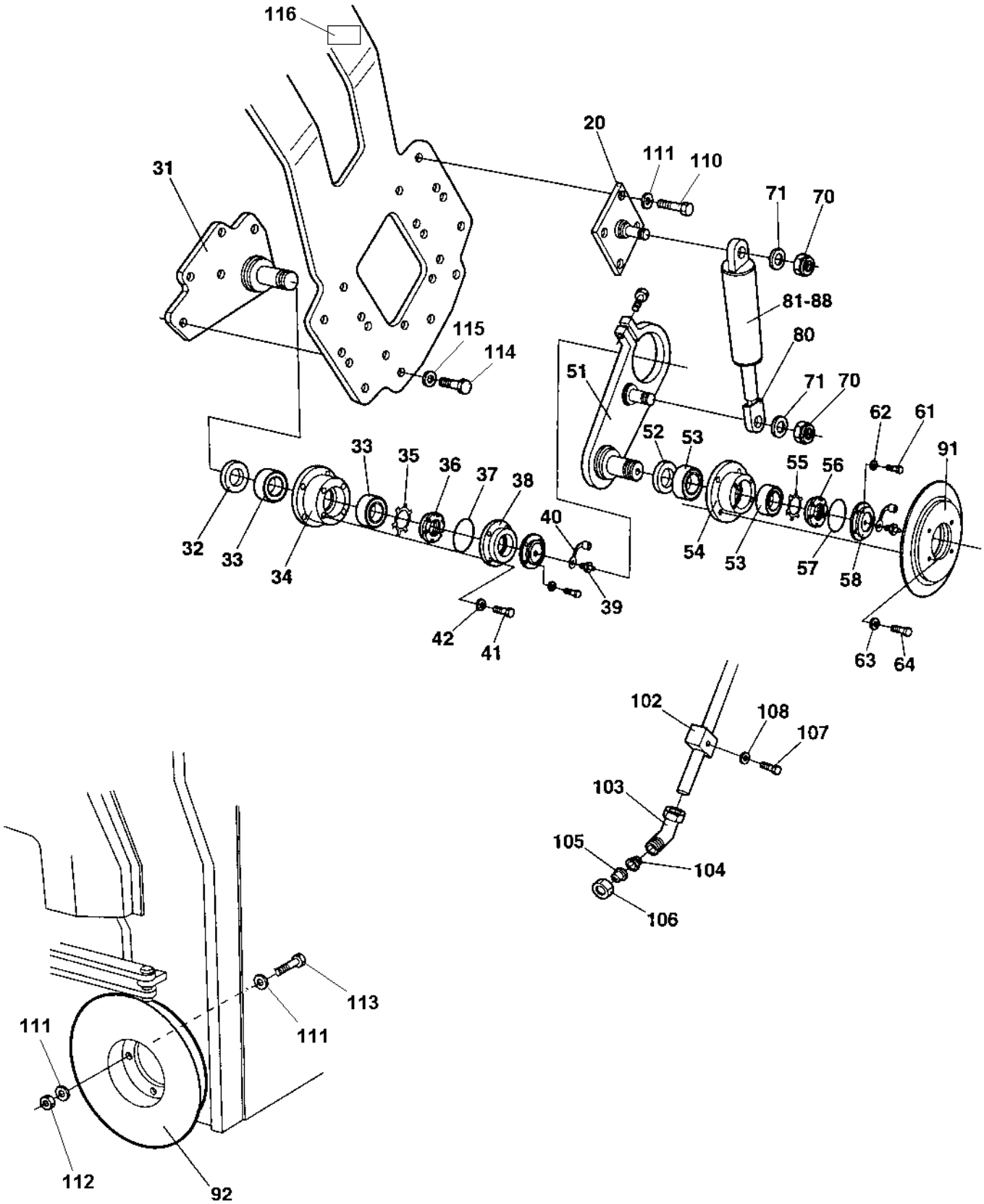

Edge cutter

Ref. No.	Part No.	Rem.	Qty	Description	Code
1	393960		1	Edge cutter, cpl	
20	909466	B	1	.Holder plate	
31	909465	A	1	.Holder plate	
32	909301		1	.Seal	
33	909302		2	.Bearing	
34	936004		1	.Housing	
35	909304		1	.Washer	
36	909305		1	.Nut	
37	909306		1	.O-ring	
38	936005		1	.Cover	
39	909308		1	.Grease nipple	
40	909309		1	.Protection	
41	936006		4	.Screw	
42	909311		4	.Retaining washer	
51	909467		1	.Lever	
52	909301		1	.Seal	
53	909302		2	.Bearing	
54	909303		1	.Tool holder	
55	909304		1	.Washer	
56	909305		1	.Nut	
57	909306		1	.O-ring	
58	909307		1	.Cover	
59	909308		1	.Grease nipple	
60	909309		1	.Protection	
61	909310		4	.Screw	
62	909311		4	.Retaining washer	
63	909312		4	.Retaining ring	
64	909313		4	.Screw	
70	909288		2	.Nut	
71	909289		2	.Washer	
80	909291		1	.Cylinder end	
81	909290		1	.Cylinder	
82	909292		2	..Bearing	
83	909293		4	..Retaining ring	
84	909294		2	..Screw	
86	909299		1	..Seal kit	
88	909298		2	..Grease nipple	
91	908787		1	.Cutting disc	8 cm
	938263		1	.Cutting disc	12 cm
92	909237		1	.Edge roller	
101	909274		1	.Sprinkler pipe	
102	909275		1	.Bracket	
103	909276		1	.Connector	
104	909277		1	.Strainer	
105	909278		1	.Nozzle	
106	909279		1	.Nut	
107	909280		1	.Screw	
108	909281		1	.Nut	
110	500056		4	Screw	M12x45 8,8
111	904231		8	Washer	13x24x2
112	586019		3	Lock nut	M12
113	500117		2	Screw	M12x80H 8,8
114	500134		5	Screw	
115	904232		5	Washer	17x30x3
116	904083		1	Safety decal	

A) Lower
B) Upper

Edge cutter Hydraulics without offset

15840-1

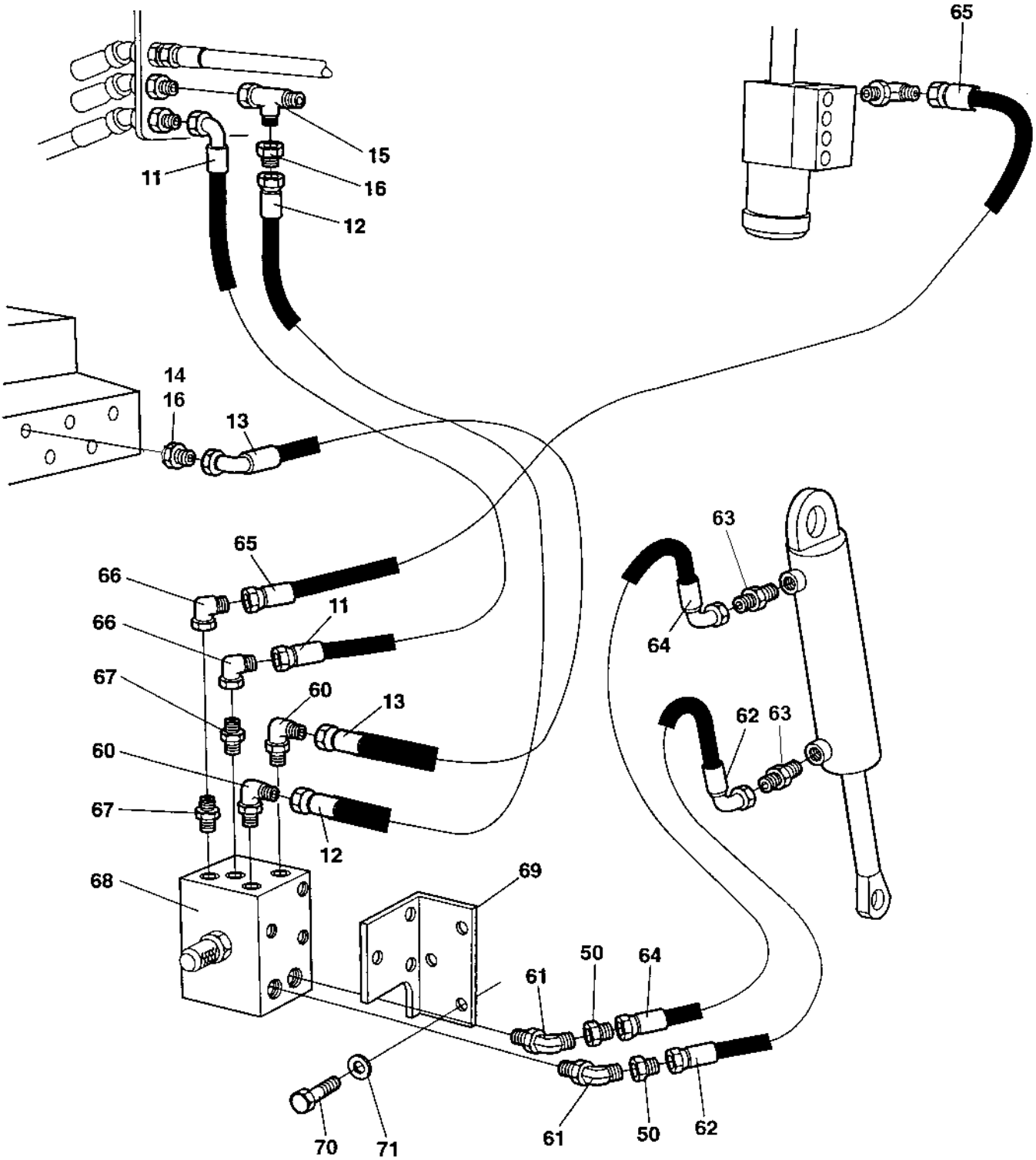

Edge cutter Hydraulics without offset

Ref. No.	Part No.	Rem.	Qty	Description	Code
11	483046		1	Hydraulic hose	
12	483047		1	Hydraulic hose	
13	482511		1	Hydraulic hose	
14	334461		1	Reducing	
15	334135		1	Tee-connector	
16	334264		1	Reducing	
50	334264		2	Reducing	
60	334420		2	Elbow 90	
61	813500		2	Elbow 45, O-ring	
62	483048		1	Hydraulic hose	
63	334199		2	Straight o-ring connector	
64	483048		1	Hydraulic hose	
65	483020		1	Hydraulic hose	
66	334196		2	Elbow 90	
67	234388		2	Connector	
68	372266		1	Valve	
	379203		1	Valve	
69	372268		1	Bracket	
70	500019		6	Screw	
71	904229		6	Washer	

Edge cutter Hydraulics with offset

17282

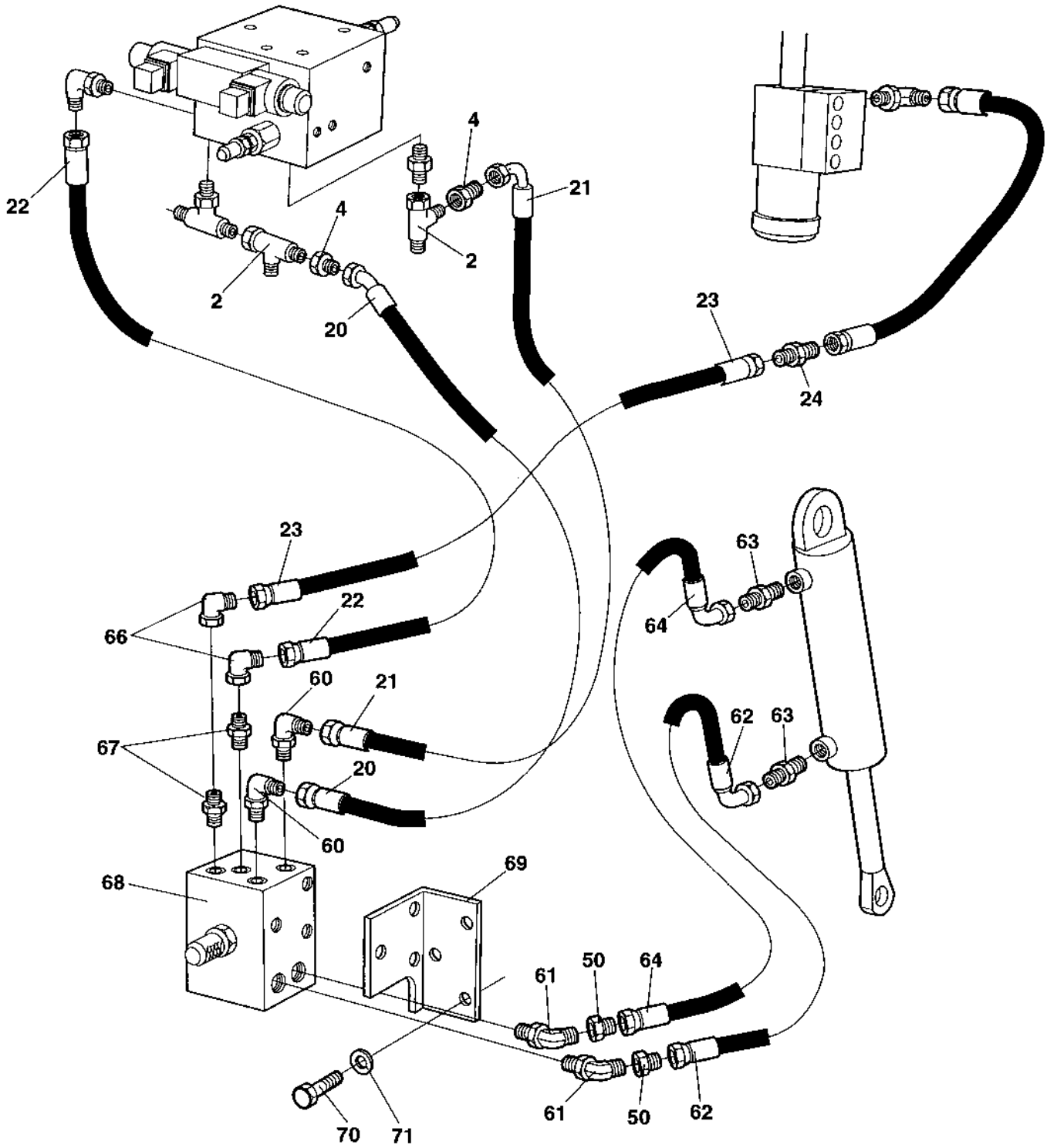

Edge cutter Hydraulics with offset

Ref. No.	Part No.	Rem.	Qty	Description	Code
2	334135		2	Tee-connector	
4	334264		2	Reducing	
20	381239		1	Hydraulic hose	
21	381240		1	Hydraulic hose	
22	381241		1	Hydraulic hose	
23	381242		1	Hydraulic hose	
24	928483		1	Adapter	
50	334264		2	Reducing	
60	334420		2	Elbow 90	
61	813500		2	Elbow 45, O-ring	
62	483048		1	Hydraulic hose	
63	334199		2	Straight o-ring connector	
64	483048		1	Hydraulic hose	
66	334196		2	Elbow 90	
67	234388		2	Connector	
68	372266		1	Valve	
	379203		1	Valve	
69	372268		1	Bracket	
70	500019		6	Screw	
71	904229		6	Washer	

Edge cutter Sprinkler system

18700

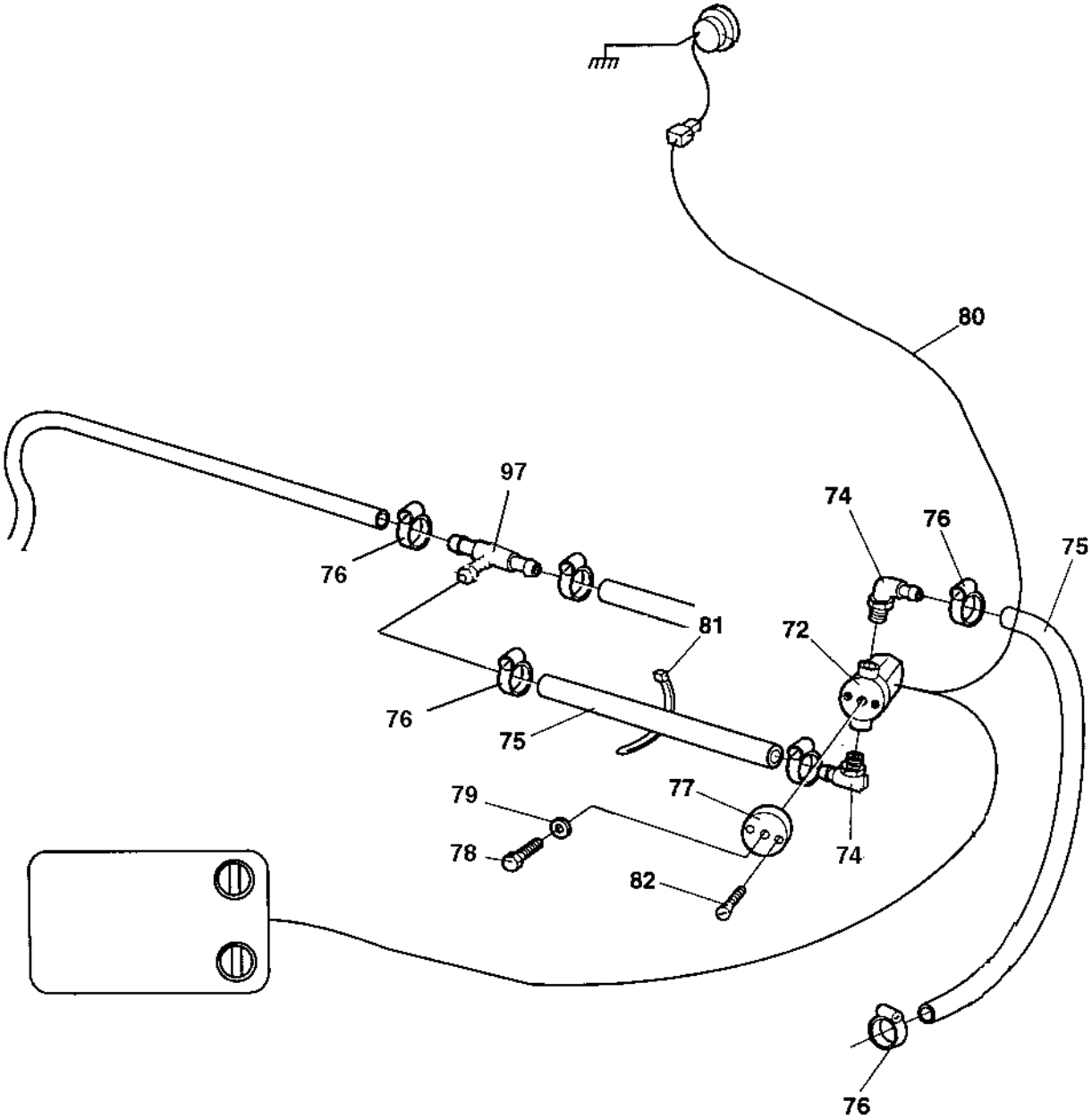

Edge cutter Sprinkler system

Ref. No.	Part No.	Rem.	Qty	Description		Code
72	287713		1	Solenoid valve		
74	901431		2	Hose connection		
75	904878	A	1XL	Hose reinforced		
76	313001		4	Hose clamp		
77	372315		1	Bracket		
78	500040		1	Screw	M6-1x20 8,8	
79	904228		1	Washer		
80	377138		1	Cable harness		
81	313041		N	Cable ties	L=186 mm	
82	535003		2	Screw		
97	923735		1	Hose connection		

A) L=2,5 m

Asphalt temperature meter

17869-2

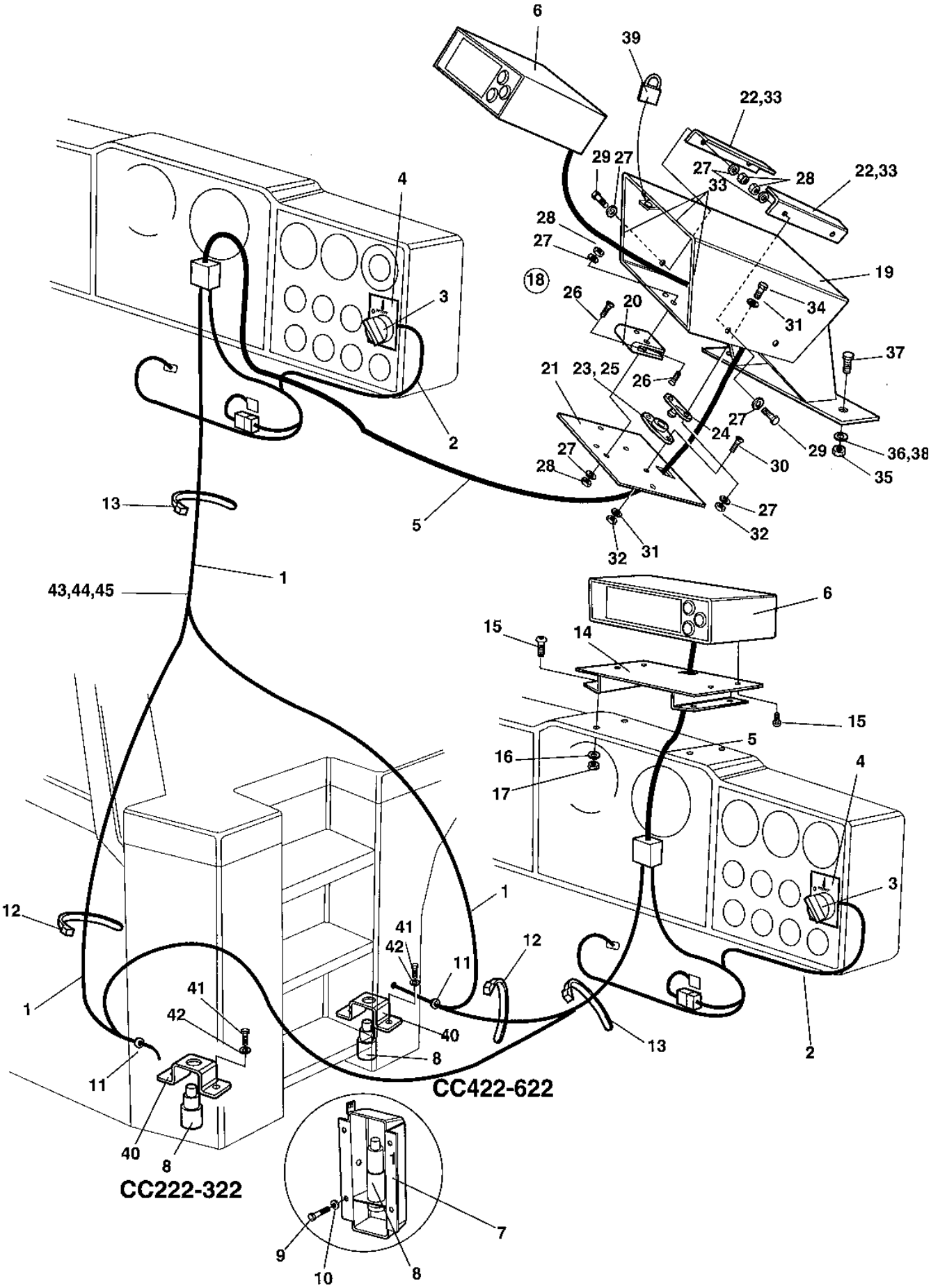

Asphalt temperature meter

Ref. No.	Part No.	Rem.	Qty	Description		Code
1	388522		1	Cable harness		
2	378116		1	Cable harness		
3	930151		1	Switch		D
4	388561		1	Sign		
5	377819		1	Cable harness		
6	388775		1	Temperature meter		
7	387981		1	Box		
8	387982		1	Temperature sender		
9	500053		4	Screw	M8-1,25x20 8.8	
10	904229		4	Washer		
11	791594		1	Grommet		
12	925802		N	Cable ties	L=142 mm	
13	313068		N	Cable ties	L=92 mm	
14	387988	1	1	Bracket		
15	904653	1	8	Screw	M5x16 A2-70	
16	904281	1	4	Washer	5,3x10x1	
17	586001	1	4	Lock nut	M5	
18	377812	2	1	Temperature meter box, cpl		
19		2	1	.Box		
20	903907	2	1	.Hinge		
21	378052	2	1	.Cover		
22	389111	2	1	.Holder		
23	904909	2	1	.Door bumper		
24	904907	2	1	.Door bumper		
25	904908	2	1	.Rubber part		
26	513008	2	4	.Screw		
27	904228	2	10	.Washer		
	904639	2	4	.Washer	6,7x14x1,5	
28	904563	2	8	.Lock nut	M6	
29	500013	2	4	.Screw	M6-1x16 8,8	
30	513027	2	2	.Screw	M4x16H 10,9	
31	904698	2	6	.Washer		
32	923976	2	4	.Nut		
33	902566	A,2	5XL	.Rubber strip		
34	500238	2	2	.Screw		
35	570005	2	2	Nut	M8	
36	904556	2	2	Washer	8,4x16x3,0	
37	500022	2	2	Screw	M8-1,25x30 8,8	
38	904640	2	2	Washer	8,4x22x3	
39	358881	2	1	Pad lock		
40	377422		1	Bracket		
41	500019		2	Screw		
42	904229		2	Washer		
43	921065		6	Clamp		
44	904228		6	Washer		
45	586002		6	Lock nut	M6	

1) Valid for machines with cab.
2) Valid for platform machines.
A) L= 0,4 m

NUMERICAL INDEX

Part Number	Page	Part Number	Page	Part Number	Page
100040	25,43	313094	85	355258	133,135
114060	19,71	313102	91,99,103	355301	143
116041	21,71	313147	175	355983	229
151012	113	330171	109	357138	13,51,99,103
160024	97	330331	77,79,205	357139	99,103
160045	19,71	330383	77,79	357141	99,103
160058	83	330438	93	357206	243
160105	19,21,71	332038	97	357275	77,79
160279	95	334118	95	357419	109
160287	101,105	334121	91,95,99,103,109	357459	83,99,103
160344	19,71	334128	93	357488	29
162017	71	334135	91,109,259,261	357498	179
162024	109	334138	93	357500	179,181
162027	71	334143	99,103	357526	129
167032	25,43	334155	89	357562	125
202028	31	334156	93	357587	229
202041	51	334196	109,259,261	357592	229
202043	53,225	334197	109	357643	161,191,213
202057	45	334199	259,261	357855	127
205067	99,103	334203	99,103	357952	253
230400	93	334234	93,115	358452	153
230515	77,79	334236	109	358684	41
232119	99,103	334237	89	358825	41
232122	99,103	334248	93	358846	51
233215	55	334264	259,261	358881	127,235,265
234233	115	334389	93,115	359001	51
234243	89	334410	115	359002	51
234349	93,115	334420	99,103,259,261	359003	51
234388	109,259,261	334445	93	359043	173
234512	101,105	334461	99,103,259	359125	173
234662	101,105,109	334463	115	359131	43
234850	109	334468	89	359139	87,99,103,107
234869	115	334524	93,99,103,115	359192	109
234953	99,103,109	334563	93	359223	97
235002	101,105	334604	89	359224	97
238272	113	335607	119	359225	97
244054	51	335914	91,95	359226	97
251729	39	337042	43	359232	29
263772	39	337045	25,43	359314	29
267791	39	340862	95	359340	133
272372	229	343318	71	359341	133
272373	229	343550	133,135,157	359342	133
287597	119,125,141,209	343732	91	359343	135
287598	141,247	343744	71	359344	135
287713	57,59,63,263	343775	29,115	359347	129
287724	47	343801	71	359351	33,37
288128	243	343872	91,95	359390	83
297018	53,93	344196	71	359402	77,79
310008	25	345139	129	359403	77,79
311016	253	345870	133,135	359418	161,163
312005	35	345871	25	359419	165,167
313001	51,83,263	345872	25	359434	33,59,63,83
313002	55,59,63,77,79	345873	25	359444	51
313008	99,103	345874	25,43	359446	51
313036	55,59,85	345875	25,43	359454	33
313038	83	347119	29	359458	33,37
313041	55,163,165,167	348136	119	359490	85
	263	348303	119	359497	85
313068	265	348331	165	359500	85
313075	83	348481	175	359502	81
313086	55,63	349715	71	359511	29
313093	243	350009	165,167	359512	29

NUMERICAL INDEX

Part Number	Page	Part Number	Page	Part Number	Page
359513	29	359972	167	371151	67
359514	29	359998	163	371185	145
359522	83	370056	229	371221	239
359551	89	370057	229	371254	83
359552	89	370058	229	371353	41
359557	89	370059	229	371364	153
359565	31	370076	119	371380	45
359574	165,167	370085	229	371381	45
359575	175	370096	179	371389	45
359583	31	370155	101,105	371390	45
359588	29	370160	161	371395	163
359589	29	370165	127	371396	163
359591	43	370175	161	371449	45
359618	83	370254	161	371450	45
359632	99,103	370255	161	371451	45
359639	99,103	370258	161	371452	45
359647	99,103	370275	161	371507	175
359648	99,103	370276	161	371519	99,103
359649	99,103	370278	161	371523	45
359650	99,103	370286	161	371569	45
359704	29	370287	161	371599	163
359733	173	370289	161	371621	163
359768	109	370294	161	371659	45
359775	157	370298	161	371665	153
359776	157	370329	185	371669	101,105
359788	173	370343	185	371727	205
359810	173	370349	185	371730	223
359813	173	370375	161	371735	67
359815	173	370425	155	371736	67
359816	173	370491	85	371757	41
359817	173	370618	85	371760	41
359818	173	370620	91	371762	41
359819	173	370644	139	371765	41
359820	173	370662	163	371767	41,243
359822	171	370686	31	371768	41
359845	127	370688	31	371769	41
359885	161,163	370699	53	371770	41
359887	161,163	370745	53	371819	183
359888	163	370746	53	371837	219
359889	163	370747	53	371885	155
359892	163	370761	205	371960	221
359893	173	370765	85	372091	161
359894	163	370766	185	372092	161
359895	163	370806	191,213	372093	161
359900	165,167	370820	31	372094	161
359914	165,167	370835	241	372103	127
359915	165,167	370878	81	372104	127
359916	165,167	370955	173	372105	127
359917	167	371009	175	372126	47
359919	165,167	371016	153	372229	9,13,89
359920	165,167	371017	153	372265	67
359921	165,167	371034	187	372266	259,261
359924	171	371058	153	372268	259,261
359928	175	371101	173	372315	263
359929	175	371129	163	372566	47
359931	175	371132	67	372576	131
359932	175	371136	67	372588	77,79
359936	179	371141	67	372631	185
359940	175	371145	67	372658	31
359941	143	371148	67	372672	165,167
359955	71	371149	67	372674	153
359971	167	371150	67	372675	47

NUMERICAL INDEX

Part Number	Page	Part Number	Page	Part Number	Page
372680	101,105,245	374496	47	379457	49
372682	95	374545	51	379509	47
372698	31	374756	149	379623	243
372699	31	374787	49	379637	185
372704	161,163	374788	49	379811	243
372718	53	374789	49	379812	243
372774	119	374790	49	379843	243
372775	119	374978	49	380162	45
372791	77,79	374979	49	380176	185
372792	77,79	375252	45	380447	83
372832	31	375272	89	380660	129
372867	31	375283	93	380708	143
372869	77,79	375284	93	380780	87,109,111
372893	45	375285	93	380993	25
372894	45	375659	43	381027	71
372898	45	375661	43	381029	109
372912	89	376040	99,103	381239	261
372959	173	376175	151	381240	261
372960	173	376178	145	381241	261
372964	165,167	376179	145	381242	261
372965	173	376180	145	381400	165,167
372966	173	376182	147	381403	165,167
372999	119	376184	153	381556	157
373124	31	376187	147	381561	137
373129	31	376395	143	381619	51
373130	31	376396	175	381665	53
373152	31	376466	147	381666	53
373177	175	376488	185	381675	45
373183	109	376537	29	381676	175
373187	49	376725	35	381711	91
373227	163	376726	35	381736	91
373302	83	376728	35	381788	67
373304	83	376729	35	381789	67
373403	87,109,113	376916	99	381790	67
373422	45	377138	263	381791	67
373476	47,49	377255	219	381893	123
373523	81	377356	119	382057	89
373582	139	377422	265	382113	89
373694	85	377432	109	382118	81
373747	187	377514	157	382157	53
373749	187	377518	165	382160	89
373890	81	377584	109	382213	179
373906	187	377673	83	382225	179
373907	187	377677	185	382232	89
373936	239	377699	83	382266	119
373968	187	377742	229	382267	119
373986	187	377743	229	382337	51
373987	187	377744	229	382349	179,181
374002	187	377812	265	382351	77,79
374003	187	377819	265	382425	55,59,63
374004	187	378035	129	382586	59,63
374024	187	378052	265	382699	251
374066	187	378116	265	382700	251
374105	127	378135	141	382701	251
374163	89	378396	33	382702	251
374165	89	378694	141	382751	229
374200	89	378849	47	382752	55
374213	141	378973	47	382782	141
374379	127	379006	91	382838	123
374417	173	379109	73	383002	251
374494	87,93,97	379203	259,261	383016	39
374495	45	379319	229,231	383023	91

NUMERICAL INDEX

Part Number	Page	Part Number	Page	Part Number	Page
383129	59,63	385908	243	390963	165
383200	167,185	385909	243	391029	71
383389	39	385932	163	391163	159,165,167,169
383390	39	385940	243	391277	71
383391	39	385994	177	391280	71
383424	243	386002	177	391286	71
383460	95	386003	177	391290	29
383461	91	386037	31	391292	71
383462	91,95	386055	243	391329	91
383697	55,59,63	386058	83	391330	91
383705	161,191,213	386084BR	229	391331	95
383827	73	386084CN	229	391346	165
383852	39	386084DE	229	391981	29
383898	185	386084DK	229	392002	99,103
383900	185	386084EN	229	392011	55
384038	125	386084ES	229	392114	71
384055	125	386084FI	229	392120	71
384133	207,249	386084FR	229	392188	119
384136	249	386084GR	229	392221	131
384141	243	386084IS	229	392405	71
384143	243	386084IT	229	392492	141
384144	243	386084NL	229	392508	55
384145	243	386084NO	229	392509	55
384147	243	386084PT	229	392510	55
384176	249	386084SE	229	392567	155
384498	25	386128	167	392616	91
384589	247	386272	19,21,71	392617	115
384672	243	386994	45	392743	115
384673	243	387087	45	392919	229
384674	243	387381	241	392930	141,145
384775	59,63	387487	45	392954	115
384820	59,63	387690	35	393272	55,63
384835	249	387693	35	393336	89
384877	243	387981	265	393338	89,93
384878	207,243,249	387982	265	393697	55
384879	243	387988	265	393960	257
384880	207,249	388026	47	393981	141
384897	249	388340	35	394009	81
384907	31	388344	35	394250	23,71
384927	207,249	388345	35	394251	23,71
384954	251	388355	35	395291	77
384958	251	388482	33,37	395292	77
385163	243	388487	33,35	395293	77
385264	145,147	388488	33,35	395504	79
385339	51	388489	33,35	395548	181
385340	239	388490	35	395952	103
385406	155	388502	77	395969	181
385442	205	388522	265	396161	243
385574	243	388561	265	413074	243
385575	243	388775	265	416004	171
385576	249	389111	265	416034	179,181
385577	249	389170	179,181	433830401	93,99,103
385588	249	389175	179,181	465013	175
385589	249	389177	179,181	470021	119
385590	249	389184	179,181	475064	31
385735	191	389577	153	476019	241
385736	213	390160	71	480446	107
385766	243,249	390615	55	480447	107
385769	205,207	390616	55	480449	107
385905	243	390619	55	480450	107
385906	243	390809	35	480457	107
385907	249	390897	71	480468	107

NUMERICAL INDEX

Part Number	Page
482064	109
482167	91
482257	101,105
482472	109
482511	259
482757	115
482782	115
482892	93
482917	99,103
482918	99,103
482936	115
482940	109
482955	89
482990	99,103
482992	101,105
482993	101,105
482995	99,103
483020	259
483046	259
483047	259
483048	259,261
483054	93
483057	93
483071	89
483073	91
483124	89
483144	93
483231	109
483326	89
483328	91
483409	93
483410	93
483411	109
483463	115
483513	109
483698	99,103
483699	109
483800	93
483802	93
483905	89
483952	91
483953	91
484061	115
484065	115
484073	89
484082	89
484086	91
499266	81
499444	59,63
500001	171
500002	57,59,63
500003	35
500006	145
500012	47,163,197,199
	201
500013	45,163,179,181
	221,265
500015	31,179,181
500016	59,63,83
500019	71,77,79,115,151
	161,163,185,223
	241,245,259,261
500019	265
500020	55
500021	45,47,77,79,89
	93,99,103,109
	115,125,147,153
	161,163,165,167
	173,187
500022	47,51,55,85,119
	173,187,243,247
	265
500023	175
500024	45
500025	39
500027	91
500028	31,41,71,89,91
	99,103,119,161
	165,167
500029	81,89,99,103,161
	163
500030	31,83,95,187
500031	33,35,41,59,63
	167,243
500037	43,161
500040	31,77,79,119,127
	157,165,167,191
	213,251,263
500041	59,63
500043	31
500044	153
500046	35,39,95
500047	41,45,163,185
	241
500048	83
500049	33,35,71,243
500050	77,79
500051	59,63,71
500053	31,45,51,59,63
	67,81,85,99,103
	109,119,167,175
	177,183,191,213
	265
500056	33,35,39,91,257
500060	119
500061	99,103
500068	109
500070	91
500075	41,47,161,221
500076	71
500077	89
500086	143
500091	89
500105	119
500109	29
500111	29
500117	257
500122	77,79
500133	37
500134	257
500153	187,205
500163	71
500169	171
500170	185
500180	185,243
500186	177
500189	187
500191	29
500192	91
500194	89,163
500198	175
500199	29
500206	73
500228	161
500238	265
500239	119
500240	35,37
500267	35,85
500269	29
500274	77,79
500292	243
500296	39
502036	99,103
502037	89
502042	93
503016	141
508001	201
508020	125
508042	43
508048	71,243
508056	157,173
508092	175
508095	77,79
508096	77,79,99,103
513003	173
513008	31,163,219,265
513012	51
513013	161,163
513014	91
513025	201,203
513027	265
513028	31
516051	165,167
527002	71
533010	175
533024	171
533030	145
533038	145,175
533050	157
535003	263
535005	191,213
535053	45
541535	191,213
541702	147,197,199,201
541703	155,167,243
570002	143
570004	31,77,79,141,161
	171,175,205,251
570005	39,41,47,55,59
	63,85,89,109,119
	125,153,161,163
	165,167,173,201
	203,243,265
570006	33,35,37,39,61
	65,89,91,95,165
	167,243

NUMERICAL INDEX

Part Number	Page	Part Number	Page	Part Number	Page
570008	51	791389	145,147	901329	73
570019	175	791401	89	901331	73
573004	175	791409	89,93	901333	73
573005	41	791414	89,93	901335	73
573008	173	791431	83	901369	145,147
586001	119,125,145,265	791489	129	901431	55,59,63,263
586002	31,41,45,47,51	791594	265	901634	67
	59,63,83,119,127	791642	229	901636	73
	143,145,155,165	791665	243	901637	73
	167,171,177,187	791709	31	901766	119
	265	791746	93	901767	45,141
586003	45,51,67,85,115	791755	35	901832	247
	119,153,165,167	791782	229	902064	145
	175,185,187,191	791846	93	902066	145
	201,203,213,243	791847	89,93	902166	31,45,85
586018	81,119,183	791916	51,149	902173	243
586019	33,35,39,85,175	791949	55,63	902203	175
	243,257	791959	55,63	902223	141
586021	35,223	791963	33,37	902227	145,147
586022	161,163	791967	225	902252	73
600002	141	791968	225	902284	45
600004	41,163,187	791969	77,79	902285	99,103,127
600006	67,183,187	791974	55	902286	99,103,119
600008	31,41,183,187	791977	55	902287	187
600014	161	792094	115	902379	93
600016	109	792129	35	902508	219
601001	145,251	792274	83	902520	45,173
603001	165,167	792387	91	902528	143
603009	39,101,105,161	801198	91	902566	265
	163	801781	109,243	902610	253
603019	41,161	813316	99,103	902843	77,79
603023	31,161	813443	99,103	902861	107
615041	171	813444	95	902862	107
615061	41	813500	259,261	902866	31,45,83,201,203
615076	31	813791	81	902882	97
624004	163	814071	57,61,65	902916	51
624005	229	892446	99,103	902917	51
624011	241	900430	91	902918	51
624017	229	900528	143	903082	99,103,109,199
629066	223	900569	31	903185	41
630008	39,173	900775	71	903241	119
630019	109	900777	91	903290	91,163
630035	39,173	900790	145	903320	77,79
635061	29,115	900798	119	903340	45
747691	77,79,205	900904	155	903341	45
791077	125	900998	221	903342	51
791125	57,61,65	900999	221	903344	45,51
791126	57,61,65	901182	145	903422	109,229
791127	57,61,65	901183	145	903423	229
791128	57,61,65	901191	59,63	903424	229
791130	55,59	901209	155	903425	229
791134	55,59,63	901220	253	903436	127
791135	57,61,65	901224	141	903459	229
791152	73	901225	141	903524	91
791172	243	901226	125,141	903540	59,63
791226	161,191,213	901227	141,209	903553	93
791253	143	901228	141,209	903582	157
791276	229	901229	141,209	903599	127
791304	31	901240	141,209	903600	127
791312	177	901256	141	903601	127
791313	177	901298	55,59,63	903602	127
791314	177	901315	191,201,213,215	903625	141

NUMERICAL INDEX

Part Number	Page
903626	55,61,65
903631	119
903653	127
903657	129,133,135,137
	139
903658	67,127,175
903678	127
903683	83
903684	83
903685	83
903715	91
903716	137
903726	71
903731	163
903733	31
903736	185
903741	141,209
903744	81
903769	61,65
903773	101,105
903774	93
903782	201
903792	185
903799	175
903802	201,203
903803	219
903805	201,203
903808	191,213
903812	101,105
903813	109
903831	101,105,109
903852	251
903856	47
903857	45
903875	129,137,139
903876	129,137,139
903886	57,61,65
903907	265
903914	167
903917	165,167
903918	165,167
903927	133,135
903936	47
903937	47
903938	9,13,77,79
903956	141
903961	127
903969	219
903970	141
903989	89
904003	91
904004	89,93
904010	89
904015	125
904016	133,135
904031	123
904032	119,123,145,147
904036	119
904037	119,151
904038	147
904039	145
904041	123
904044	119
904056	91,95
904059	81
904060	81
904069	229
904076	45,47
904083	257
904092	229
904104	81
904110	89
904115	101,105
904116	59,63
904164	113
904165	243
904180	185
904206	53,143,165,167
904207	127
904208	127
904209	47,49
904211	83
904213	89,95
904214	91,243
904228	31,39,45,47,51
	53,59,63,77,79
	83,119,127,143
	145,157,161,165
	167,175,177,179
	181,191,213,221
	243,251,263,265
904229	39,45,51,55,59
	63,71,77,79,89
	91,101,105,109
	115,119,125,147
	151,153,157,161
	163,165,167,175
	201,203,223,241
	243,247,259,261
	265
904230	29,33,37,39,71
	83,89,91,95,119
	161,167,243
904231	29,33,35,39,43
	45,71,77,79,85
	101,105,109,165
	173,175,239,243
	257
904232	29,35,39,51,71
	91,173,223,257
904233	29,77,79,163
904234	185
904281	59,63,119,125
	145,149,265
904287	187
904288	187
904290	177
904313	145
904314	147
904315	145
904316	145
904317	145
904318	145
904357	29
904405	51
904496	91
904556	31,47,51,55,59
	63,81,85,93,99
	103,119,163,173
	177,241,265
904557	31,33,35,81,89
	91,95,163,165
	167,243
904563	243,265
904567	99,103
904578	91
904584	91
904585	91
904597	143
904619	185
904637	81,89,93,99,103
	119
904639	31,47,265
904640	89,177,265
904653	265
904663	25
904697	157
904698	57,59,63,143,163
	265
904703	33,35,61,65
904704	143
904707	83
904718	31
904726	93
904734	45,167,185
904735	47,83,165,167
	179,181
904763	73
904781	91
904787	91
904835	229
904845	89
904870	229
904871	109
904872	109
904878	55,57,59,61,63
	65,263
904901	51
904906	251
904907	265
904908	265
904909	265
904913	51
904914	51
904939	225
904984	83
904985	83
904989	141
908110	141
908184	171
908187	171
908189	171
908190	171
908193	175
908200	175
908229	229

NUMERICAL INDEX

Part Number	Page	Part Number	Page	Part Number	Page
908265	223	908556	193,215	909277	257
908267	151	908557	193,215	909278	257
908268	191,213	908558	199	909279	257
908269	197	908559	197,199	909280	257
908270	197	908560	197,199	909281	257
908271	197,199	908561	197,199	909288	257
908272	199	908562	199	909289	257
908273	199	908563	197,199	909290	257
908278	199	908564	197,199	909291	257
908279	199	908565	197	909292	257
908280	199	908566	201	909293	257
908281	197	908567	201	909294	257
908282	197	908568	201	909298	257
908284	201,203	908569	201	909299	257
908287	201,203	908570	201	909301	257
908295	77,79	908571	201	909302	257
908354	201,203	908572	201	909303	257
908355	223	908573	201,215	909304	257
908356	219	908574	201,215	909305	257
908357	219	908575	201,215	909306	257
908358	219	908576	201,203	909307	257
908359	151	908577	201,203	909308	257
908361	223	908578	201,203	909309	257
908362	199	908579	201,203	909310	257
908363	197	908580	201,203	909311	257
908364	197	908581	201,203	909312	257
908399	81	908582	201,203	909313	257
908400	13,81	908583	201,203	909369	77,79
908401	13,81	908584	201	909465	257
908452	81	908598	205	909466	257
908496	197,199	908599	205	909467	257
908497	191,213	908600	205	909510	191,213
908500	191,213	908602	209	909745	171
908503	191,213	908603	209	909746	171
908504	191,213	908604	209	909747	175
908505	191,213	908605	209	909748	175
908506	191,213	908606	209	909749	175
908507	191,213	908608	209	909750	175
908509	191	908610	209	909751	175
908510	191,213	908611	209	910161	93,99,103
908511	191,213	908613	209	910995	43
908512	191	908614	209	911456	137,139,143
908515	191,213	908617	209	911620	107
908529	195,217	908618	209	921031	147
908530	195	908623	219,223	921036	243
908531	195	908624	219	921039	147
908532	195	908625	223	921047	59,63
908535	195,217	908626	223	921063	77,79
908536	195,217	908627	223	921065	265
908537	195,217	908764	193,215	921080	83
908539	195	908787	257	921104	119,165,175
908540	195	908993	193,215	921119	101,105
908541	195	909122	175	921132	77,79
908542	195	909152	153	922325	175
908544	195,217	909211	107	923253	45,51
908545	201	909212	107	923378	99,103
908546	193,215	909213	107	923405	89,93
908548	193	909214	107	923680	59,63
908549	193	909237	257	923681	59,63
908550	193	909274	257	923684	61,65
908551	193	909275	257	923734	55,59,63
908553	193	909276	257	923735	55,263

NUMERICAL INDEX

Part Number	Page	Part Number	Page	Part Number	Page
923859	59,63	932059	137	938602	247
923876	59,63	935244	201,203	938603	247
923962	59,63	935589	191,213	938605	247
923976	141,171,265	935613	165,167	938606	247
924544	51,55,57,59,63	935614	165,167	938608	207,249
924585	89,187	935771	171	938611	207,249
924731	99,103,109	935772	171	938612	215
924823	163	935773	171	938613	215
924996	55,57,59,61,63	935780	97	938614	215
	65	935781	97	938615	215
925208	29	935782	97	938616	215
925519	71	935783	97	938619	249
925599	51,55,59,63	936004	257	938620	207,249
925713	139	936005	257	938622	207,249
925762	109	936006	257	938623	249
925802	83,265	936147	77,79	938624	249
926214	25,43,101,105	936277	191,213	938631	249
	109,113,173	936897	201	938632	207,249
926220	173	937056	201	938634	207
926611	119,145	937106	145	938636	207,249
926736	71	937107	145	938637	249
926985	31	937108	145	938638	207,249
926989	139	937109	145	938643	249
927233	31,171	937165	225	938644	207
928021	119	937395	193,215	938647	207
928022	91	937397	193	938660	191,213
928041	31,51	937398	193	938676	191,213
928371	91	937399	193	938677	195,217,219
928381	35,47,155,171	937400	193	938678	191,213
928467	51	937402	193	938679	191,213
928483	261	937403	193,215	938687	209
928497	175	937405	193,215	938691	205
928502	145	937406	201	938779	207,249
928784	53	937407	201	938780	207,249
928849	239	937408	201	938781	207,249
928850	29	937620	167	938783	207,249
928908	91	937621	167	938784	207,249
929012	107	937800	111	938787	249
929013	107	937801	111	938788	207,249
929014	107	937802	111	938789	207,249
929023	119	937803	111	938790	207,249
929122	99,103	937804	111	938806	195
929226	89,93	937806	111	938807	195,217
929236	91	937807	111	938808	195,217
929322	9,13,83	937808	111	938809	195,217
929419	59,63	937809	111	938810	195,217
929447	19,21,71	937810	111	938811	195,217
929455	145	937892	167	938812	195,217
929863	25,43	937932	193,213,215	938813	195,217
930046	157	937958	171	938814	217
930150	119	938029	209	938815	217
930151	265	938263	257	938816	217
930154	129,137,139,143	938306	55,59	938817	217
930161	137	938307	55,59	938818	217
930163	129,137,139,143	938558	17,25	938834	193,215
930166	137	938565	193	938835	193
930192	137,139	938566	193,215	938836	193,215
930200	143	938567	193,215	938837	193,215
932032	143	938597	247	938838	193,215
932056	137	938598	247	938839	215
932057	137,139	938599	247	938840	215
932058	129,137,139	938600	247	938841	215

NUMERICAL INDEX

Part Number	Page
938842	191,213
938843	191,213
938844	191,213
938845	191,213
938846	191,213
938847	191,213
938848	213
938850	213
938851	213
938852	213
938853	209
938854	209
938855	209
938856	209
938864	207
938865	207
938867	207
938871	205
938872	205
938873	205
938874	205
938891	17,21
938938	207,249
938939	207,249
938940	207,249
938941	207,249
938942	207,249
938943	207,249
938944	207,249
938945	207,249
938946	207,249
938947	207,249
938948	207,249
938949	207
938950	207
938951	207
938952	207
938953	207
938954	207
938955	207
939469	201
939478	77,79
939515	9,11,13,77,79
939837	77,79
939838	77,79
939839	77,79
939840	77,79
939958	119
939976	77,79
940222	77,79
940235	13
940237	7,9
940238	7,11
940239	7,13
940259	83
940389	203
940391	203
940392	203
940394	203
940395	203
940848	191,213
940849	191,213
940980	77,79
945169	131
945227	45
945228	45
945229	45
945230	45
945231	45
945264	203
945265	203
945266	203
945622	165
945632	169
945633	169
945634	169
945635	169
945636	169
945637	169
945661	165
945717	17,23
945721	17,19
947689	239
947712	29
950279	45
960273	119
960275	121
960792	143
985012	129,133,135,137
	139
985013	145,191,213
985014	145
985051	191,213
989151	99,103
991657	229
991658	229
999027	119