DYNAPAC

Part of the Atlas Copco Group

PART LIST

Dynapac Paver Model: F1000T

Serial Number: 717US7864 - 717US7887

Dynapac USA, Inc.
Part of the Atlas Copco Group
2100 North First Street
Garland, Texas 75040 USA

Read the instruction manual before operating this equipment.
This manual contains important safety information.
Do not destroy this manual.
This manual must be available to the personnel who operate and maintain this machine.

DYNAPAC
Part of the Atlas Copco Group

How to Read This Catalog

Please Note

Comments marked with this sign must be considered.

General

Since the spare parts catalog includes all available components of each machine type, more components are shown than equipped on each machine.

Table of Contents

Please Note

Only main assemblies marked with an X and their corresponding subassemblies are used in each machine.

Main assembly
Subassembly

	Assembly	Description	Page
	D717060018	Guide plate, left	131
	D717060020	Guide plate, middle	132
	D716064500	Conveyor lubrication	133
X	**D716040000**	**Levelling arm**	**135**
X	**D716083500**	**Fuel tank**	**137**
	D716083536	Hose assembly, fuel tank	139
X	**D717909500**	**Wash down**	**141**
	D717909503	Spray wand	143
X	**D716030000**	**Steering complete**	**145**
	D716030500	Suspensio, wheel	148
	D716031507	Steering link	149
	D716031509	Steering link	150
	D716031511	Steering link	151
	D716031555	Steering sensor	152
X	**D716906000**	**Roading lights**	**153**
X	**D717906500**	**Warning beacon**	**155**
	D717906505	Harness	156
X	**D716100000**	**Electrical assembly**	**157**
	D717101000	Engine controls	159
	D717100500	Generator drive 0PC	162
	D717104500	AC main panel	163
	D716010691	Generator mount	165
	D716103000	Operator console, l.h.	166
	D716103004	Column, hydraulic steering	170
	D716103008	Shaft	171
	D716103500	Operator console, r.h.	172
	D716103004	Column, hydraulic steering	170
	D716103008	Shaft	171
	D717104000	Dc control panel	178
	D717102000	Auger & conveyor controls	182
	D717105500	Lighting system	183
X	**D716090000**	**Hydraulic component**	**185**
	D717091001	Auger lift cylinder	188
	D717091503	Cylinder, Screed level (front)	189
	D717091502	Cylinder, Screed lift (rear)	190
	D717091501	Cylinder, Hopper pivot	191
	D717090503	HIC, Propel gearbox & pump	192
	D717091507	Valve bank, Rear work function	193
	D717091508	Valve, Vibration	194
	D717091002	Filter	195
X	**D717900500**	**Truck Hitch**	**197**
	D717011501	Paving guide pole	74
X	**D717180001**	**Auger 2**	**199**
	D717180000	Auger	201
	D722180000	Auger	202
	D754111500	Auger grease pipelines	204
	D722181600	Auger	205

Spare Parts Catalog

Spare Parts

You will find all parts shown with an item number in the illustration listed in the attached bill of material.

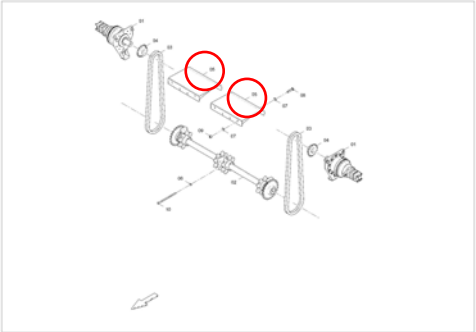

D716061000
Conveyor drive

Item	Part Number	Quantity	Description
1	D717061009	2	Motor and gear box
2	D717061018	1	Drive, conveyor
3	D716061017	2	Roller chain
4	D717061001	2	Sprocket
5	D716061005	2	Conveyor drive cover
6	D717801079	2	Washer
7	D717801044	16	Washer
8	D717801653	8	Screw
9	D717800834	8	Lock nut
10	D717801821	2	Screw

We reserve the right to change specifications in this catalog without notice

DYNAPAC
Part of the Atlas Copco Group

Cross References

Cross references within one drawing or between different drawings of one assembly will give information for the assembling of separately illustrated parts.

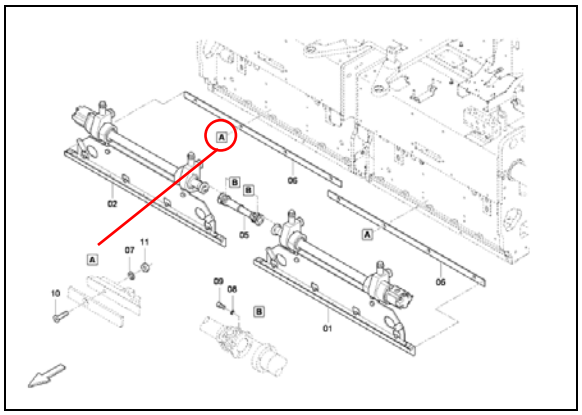

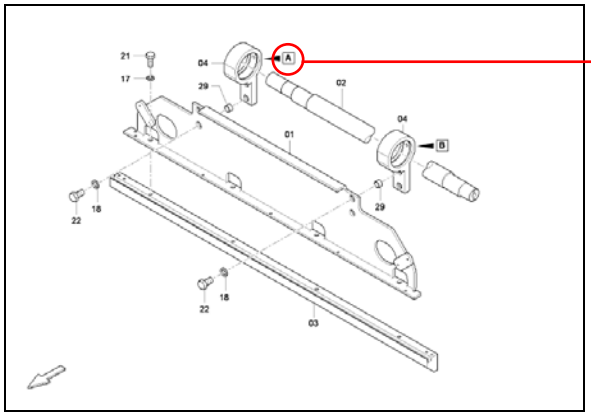

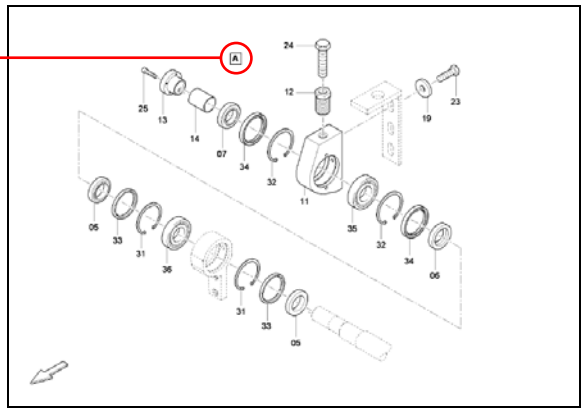

Index

A number of indexes can be found at the back of the catalog, allowing for easy part look-up.

More Information

Please refer to the interactive e-leaning feature on our webpage: http://www.dynapac.com.

We reserve the right to change specifications in this catalog without notice

TABLE OF CONTENTS

	Assembly	Description	Page
	D717000000	**F1000T Tracked Paver, Tier 3, 10 FT**	**1**
X	**D717010000**	**Frame**	**3**
	D717010500	Frame, main	7
	D717012500	Fume extractor	13
	D717011500	Guide pole	14
	D717013000	Front conveyor cover	15
	D717900500	Truck hitch	16
	4812221160	Push roller crosshead, 10'	17
	D717011005	Roller	18
	D717011000	Push roller crosshead, 8'	19
	D717011005	Roller	18
X	**D717040000**	**Screed arm**	**21**
	D717040518	Slope arm	23
X	**D717060000**	**Conveyor**	**25**
	D717061000	Conveyor drive	27
	D717061009	Motor and gear box	28
	D717061018	Drive, conveyor	29
	D717060501	Tension assembly	30
	D717061500	Conveyor chain	31
	D717064500	Conveyor Lubrication	32
	D717952332	Conveyor drive chain kit	33
	D717952339	Conveyor chain kit	34
	D717952346	Conveyor guide kit	35
	D717952353	Wear plate kit	36
	D717952360	Conveyor sprocket kit	37
X	**D717070000**	**Hopper**	**39**
	D717070500	Hopper assembly, left side, 10 ft.	40
	D717071000	Hopper assembly, right side, 10 ft.	42
	D717952325	Hopper skirt kit	44
X	**D717090000**	**Hydraulic assembly**	**45**
	D717091001	Auger lift cylinder	49
	D717091503	Cylinder, screed level, front	50
	D717091502	Cylinder, screed lift, rear	51
	D717091501	Cylinder, hopper pivot	52
	D717090001	Hose kit, hydraulic, 10' tracked paver	53
	4812200063	Hose kit, auger	55
	4812200065	Hose kit, conveyor	56
	4812200067	Hose kit, lube	57
	4812200068	Hose kit, miscellaneous	58
	4812200069	Hose kit, propel	59
	4812200071	Hose kit, vibration	61
	4812200072	Hose kit, work	62
	4812200073	Hose kit, work	63
	D717091002	Pressure filter	65
	4812221105	Rear work function	66
	D717091507	Valve bank, rear work function	67
X	**D717170000**	**Track**	**69**

Assemblies marked with an X and their subassemblies are used in your machine

TABLE OF CONTENTS

	Assembly	Description	Page
	D717171000	Track right	70
	D717170639	Track tension cylinder	73
	D717170544	Bogie assembly	74
	D717170545	Bogie, spindle	75
	D717170622	Assembly, hub, idler wheel	76
	D717171014	Motor track assy	77
	D717170600	Gearbox, track drive	80
	D717172001	Screed leveling guide	84
	D717170500	Track left	85
	D717170544	Bogie assembly	74
	D717170545	Bogie, spindle	75
	D717170622	Assembly, hub, idler wheel	76
	D717170639	Track tension cylinder	73
	D717171014	Motor track assy	77
	D717170600	Gearbox, track drive	80
X	**D717110000**	**Platform**	**99**
	D717113000	Operator station, left	101
	D717904500	Umbrella	103
	D717110500	Footwell, platform	104
	D717111500	Hood frame	106
	D717113500	Operator station, right	109
	D717904500	Umbrella	103
	D717114000	Side moulding	112
	D717085048	Assembly, radiator shroud	114
	4812221633	Hand rail	115
X	**D717080000**	**Drive**	**117**
	D717083000	Bracket assembly, hydraulik tank	120
	D717085000	Installation, water-oil-air cooler	121
	D717085004	Cooler, water-oil-air	125
	D717085027	Case drain manifold	126
	4812200124	Engine assembly	127
	D717082000	Installation, air cleaner	128
	D717081500	Muffler, 10` drive complete	130
	D717081501	Muffler, hood mount, bottom	132
	D717081000	Engine frame	133
	D717084500	Hydraulic tank	135
	D717084544	Hydraulic filter	137
X	**D717190000**	**Pump drive**	**139**
	D717191000	Pump, propel front	141
	D717192500	Pump, auger tandem	147
	D717194500	Pump, conveyor / work	152
	D717193500	Pump, generator	155
	D717193001	Pump, vibration	161
	D717191500	Pump, propel rear	162
X	**D717083500**	**Fuel tank**	**169**
X	**D717100000**	**Electrical system**	**173**
X	D717103000	Operator console lh	176

Assemblies marked with an X and their subassemblies are used in your machine

TABLE OF CONTENTS

	Assembly	Description	Page
X	D717103500	Operator console rh	180
X	D717100500	Generator drive	184
	D717100506	Motor, hydraulic	185
X	D717104000	DC control panel	187
X	D717104500	AC main panel	190
X	D717101000	Engine controls	192
X	D717102000	Auger & conveyor controls, moba	195
X	D717105500	Lighting system	196
X	D717905000	Auxiliary power panel	197
	4812222082	Key replacement kit	199
X	**D717410000**	**Installation decal**	**201**
X	**D717180001**	**Auger**	**207**
	D717180000	Auger	210
	D722180000	Auger	211
	D754111500	Auger grease pipelines	213
	D722181600	Auger	214
	D756183300	Auger gear	216
	D722183400	Engine support	219
	D717180010	Auger splash, left	220
	D717091018	Hose retention	221
	4812200217	Auger lubrication	222
	D717903008	Auger Extensions, 11.4"	223
	D717903015	Auger Extensions, 17"	224
	D717903022	Auger extensions, 34.1"	225
	D717903500	Tunnel extensions kit	226
	D717951674	Left flight kit	227
	D717951681	Right flight kit	228
	4812222659	Wide-width paving kit	229
	D717903500	Tunnel extensions kit	226
X	**D717180001**	**Auger**	**207**
	D717180000	Auger	210
	D722180000	Auger	211
	D754111500	Auger grease pipelines	213
	D722181600	Auger	214
	D756183300	Auger gear	216
	D722183400	Engine support	219
	D717180010	Auger splash, left	220
	D717091018	Hose retention	221
	4812200217	Auger lubrication	222
	D717903008	Auger Extensions, 11.4"	223
	D717903015	Auger Extensions, 17"	224
	D717903022	Auger extensions, 34.1"	225
	D717903500	Tunnel extensions kit	226
	D717951674	Left flight kit	227
	D717951681	Right flight kit	228
	4812222659	Wide-width paving kit	229
	D717903500	Tunnel extensions kit	226

Assemblies marked with an X and their subassemblies are used in your machine

TABLE OF CONTENTS

	Assembly	Description	Page
X	**D717906000**	**Roading lights**	**255**
X	**D717906500**	**Warning beacon**	**257**
X	**D717909500**	**Wash down**	**259**
	D717909503	Spray wand	261
X	**D626000001**	**Screed sensor**	**263**
	D626000000	Carlson screed	264
	4812200294	Easy IV screed assembly	267
	D717102501	Topcon leveling control	268
	D717102000	Auger & conveyor controls, moba	195
	D717901501	Non contacting SAS	270
	D717901505	Sonic averaging	271
	D717952549	SAS beam kit	272
	4812200264	MOBA-matic Leveling System	273
	D717952458	Screed disconnect kit	275
X	**D626000000**	**Carlson screed**	**264**
	4812200294	Easy IV screed assembly	267
	D717102501	Topcon leveling control	268
	D717102000	Auger & conveyor controls, moba	195
	D717901501	Non contacting SAS	270
	D717901505	Sonic averaging	271
	D717952549	SAS beam kit	272
	4812200264	MOBA-matic Leveling System	273
	D717952458	Screed disconnect kit	275
X	**AFTERMARKET KIT**	**Aftermarket Kits**	**289**
	D717951926	Service tool	290
	D717951989	Emergency hose kit	291
	D717952304	100 hr start-up kit	295
	D717952311	500 hr maintenance kit	296
	D717952318	1000 hr maintenance kit	297
	D716410031	F1000W manual kit	298
	D717410031	F1000T manual kit	299

Assemblies marked with an X and their subassemblies are used in your machine

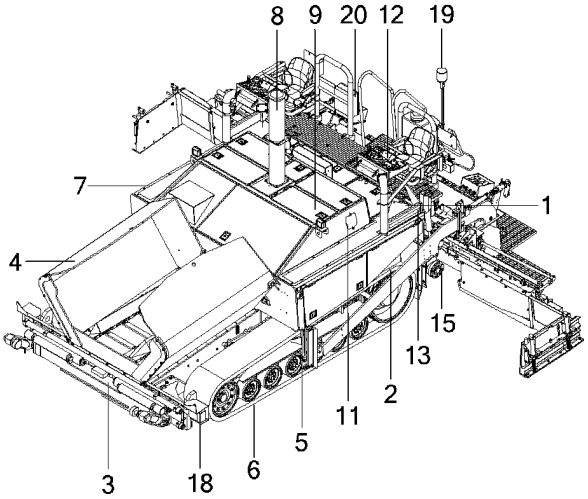

D717000000
F1000T Tracked Paver, Tier 3, 10 FT

Item	Part Number	Quantity	Description	
1	D717010000	1	Frame	X
2	D717040000	1	Screed arm	X
3	D717060000	1	Conveyor	X
4	D717070000	1	Hopper	X
5	D717090000	1	Hydraulic assembly	X
6	D717170000	1	Track	X
7	D717110000	1	Platform	X
8	D717080000	1	Drive	X
9	D717190000	1	Pump drive	X
11	D717083500	1	Fuel tank	X
12	D717100000	1	Electrical system	X
13	D717410000	1	Installation decal	X
14	D717180001	1	Auger	X
15	D717180001	1	Auger	X
18	D717906000	1	Roading lights	X
19	D717906500	1	Warning beacon	X
20	D717909500	1	Wash down	X
21	D626000001	1	Screed sensor	X
22	D626000000	1	Carlson screed	X
23	AFTERMARKET KIT	1	Aftermarket Kits	X

X) **Used on machine**

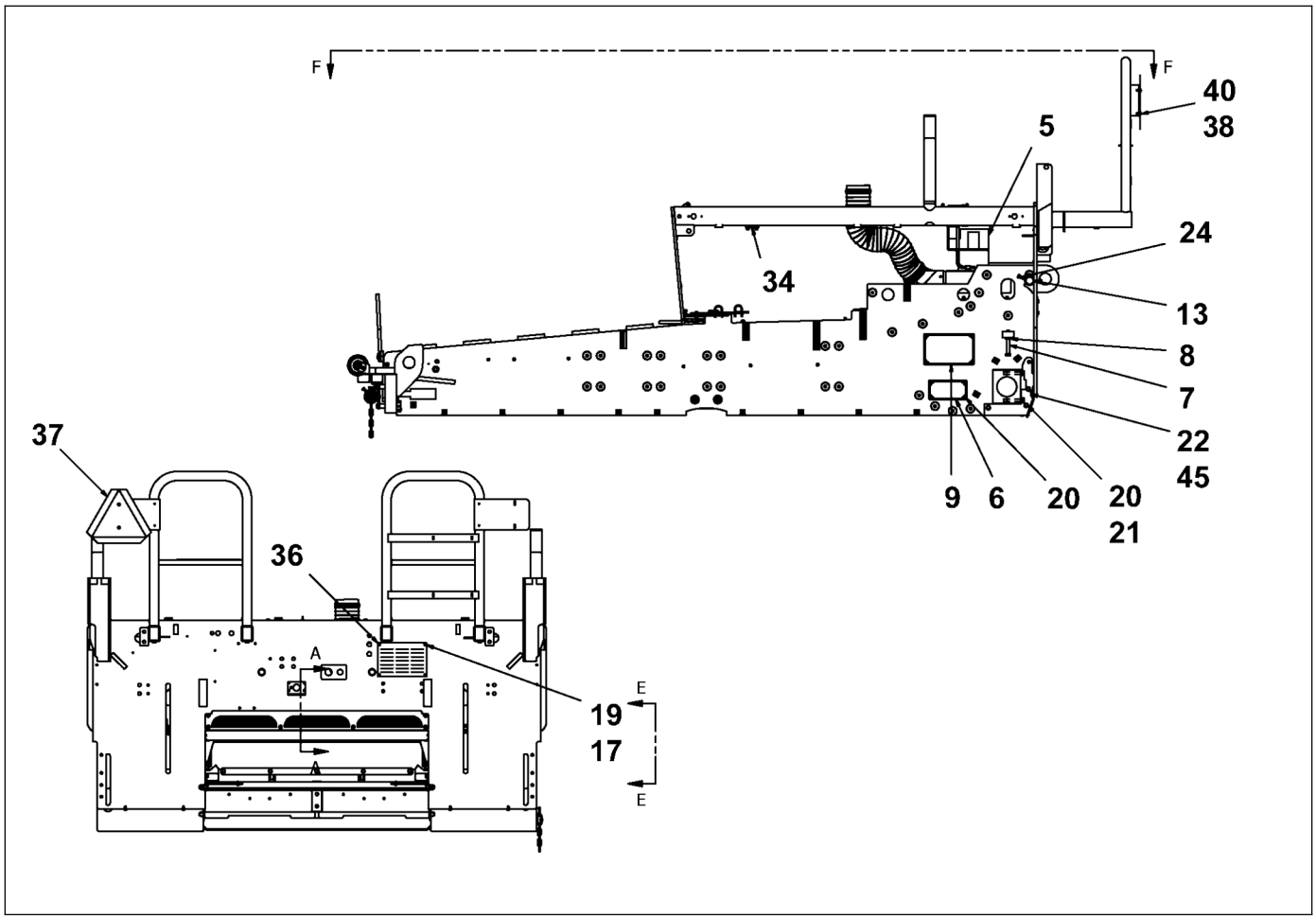

D717010000
Frame

Item	Part Number	Quantity	Description
1	D717010500	1	Frame, main
3	D717012001	1	Splash guard, left
4	D717012004	1	Splash guard, right
5	D717012500	1	Fume extractor
6	D717011504	2	Cover, Inspection
7	D717010005	2	Hex bolt, 3/4"
8	D717801030	2	Nut, 3/4"
9	D717011505	2	Cover, upper inspection
10	D717011509	1	Bracket, hood latch
11	D717011529	1	Conveyor guard
12	D717011500	1	Guide pole
13	D717010599	2	Shaft
14	D717013000	1	Front conveyor cover
15	D717010001	1	Center floor support
16	D717010006	1	Plate
17	D717801051	10	Narrow washer, 0.313"
18	D717800827	2	Lock nut, 5/16"
19	D717800561	6	Screw, 5/16"

Please check Table of Contents for use of this assembly

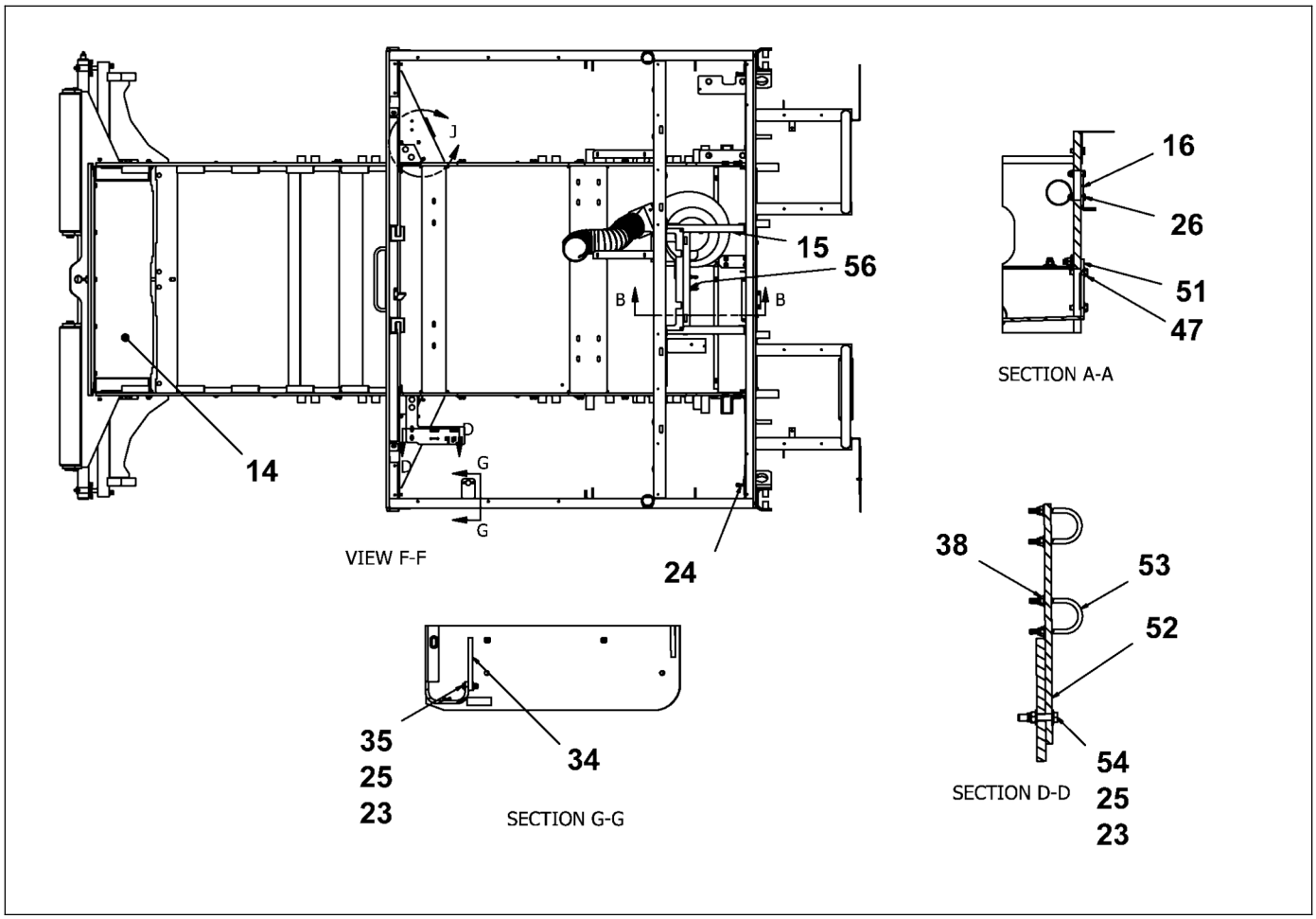

D717010000
Frame

Item	Part Number	Quantity	Description
20	D717800918	16	Screw, 5-16"
21	D717801086	6	Flat washer, 0.5"
22	D717800750	10	Screw,1/2"
23	D717800834	8	Lock nut, 3/8"
24	D717800701	2	Screw, 1/2"
25	D717801044	21	Narrow washer, 0.38"
26	D717800673	4	Screw, 1/4"
32	D717010004	1	Plate, center console
33	D717800981	2	Screw, 5/16"
34	4812200307	1	Hydraulic oil filters bracket
35	D717800596	4	Screw, 3/8"
36	D717010571	1	Cover, generator access hole
37	D717113043	1	Placard, slow moving
38	D717801058	8	Narrow flat washer, 0.25"
40	D717801443	2	Screw, 1/4"
45	D717010012	4	Washer, spash guard fender
46	D717800610	3	Screw, 3/8"
47	D717800603	6	Screw, 3/8"

Please check Table of Contents for use of this assembly

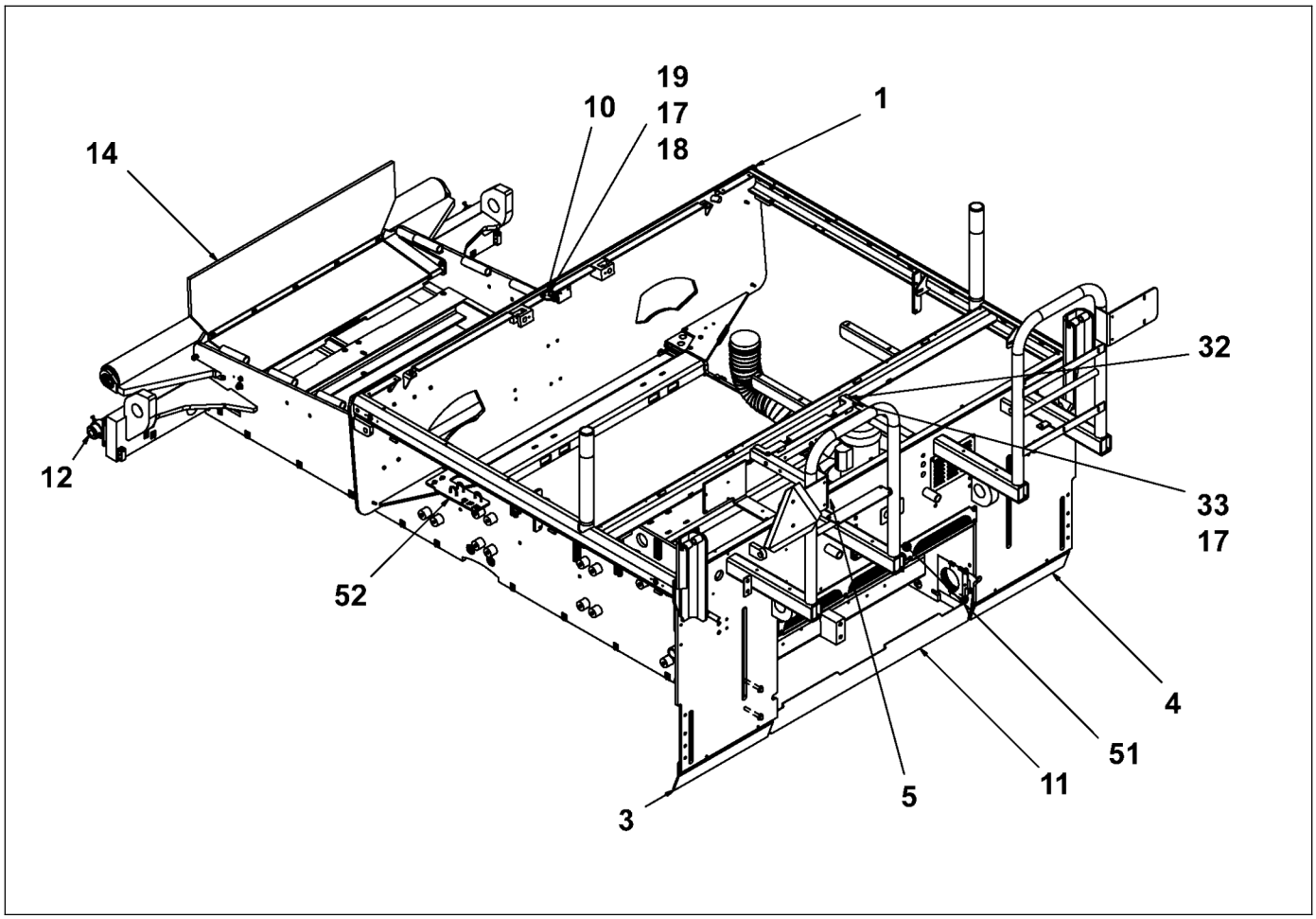

D717010000
Frame

Item	Part Number	Quantity	Description
48	D717085092	1	Edge trim support, right
49	D717010013	1	Plate
50	D717010014	1	Edge Trim Gusset Seal
51	D717010017	1	Fume screen
52	4812200149	1	Ball valve mount bracket
53	D717083019	3	U-bolt
54	D717800589	2	Screw, 3/8"
55	4700338304	2	Adapter
56	4812221372	2	Bulk head
57	D717061027	2	Zerk
101	D717900500	1	Truck hitch
	4812221160	1	Push roller crosshead, 10'
	D717011000	1	Push roller crosshead, 8'

Please check Table of Contents for use of this assembly

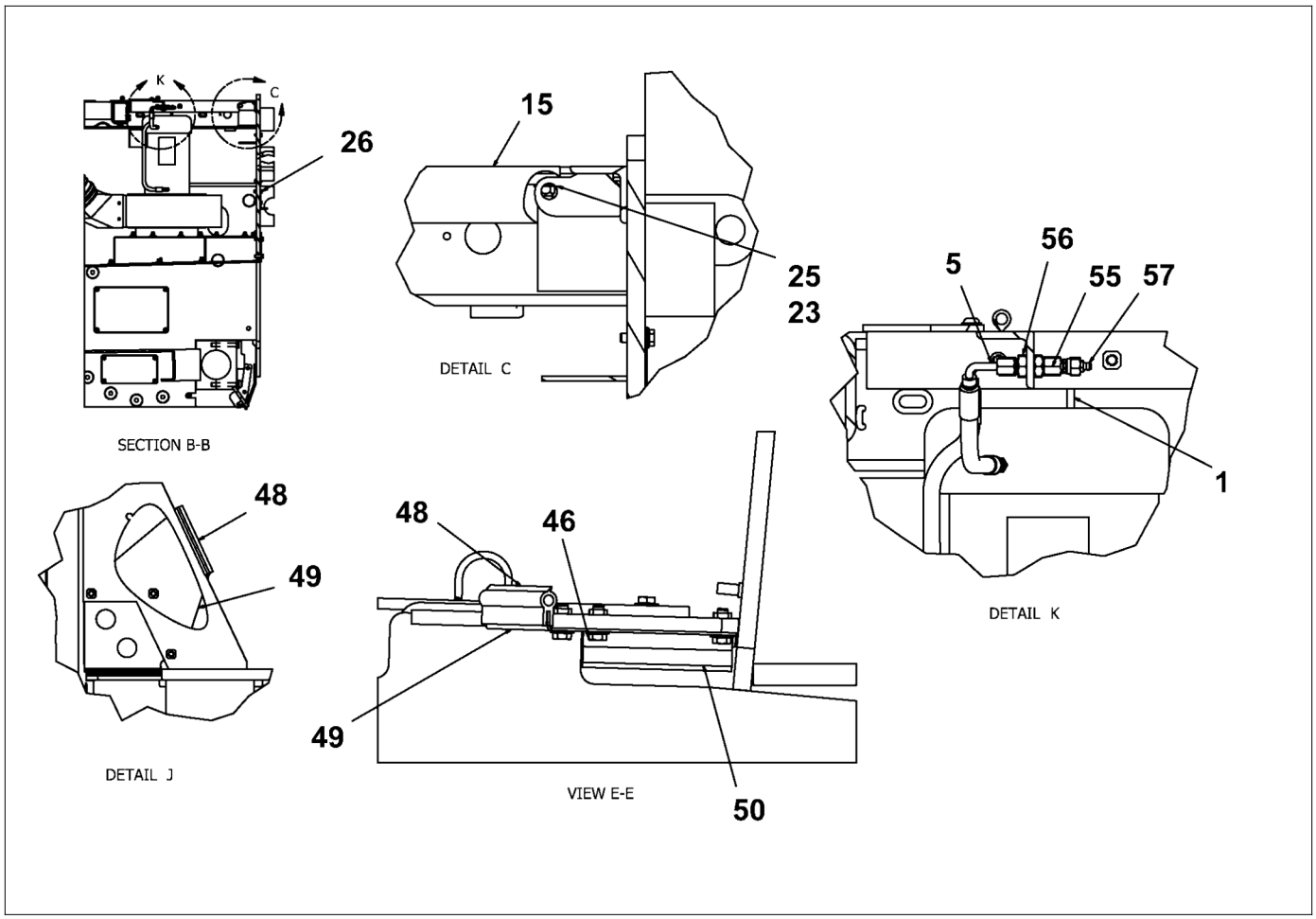

D717010000
Frame

Item	Part Number	Quantity	Description

DYNAPAC
Part of the Atlas Copco Group

Please see previous page for parts list.

Please check Table of Contents for use of this assembly

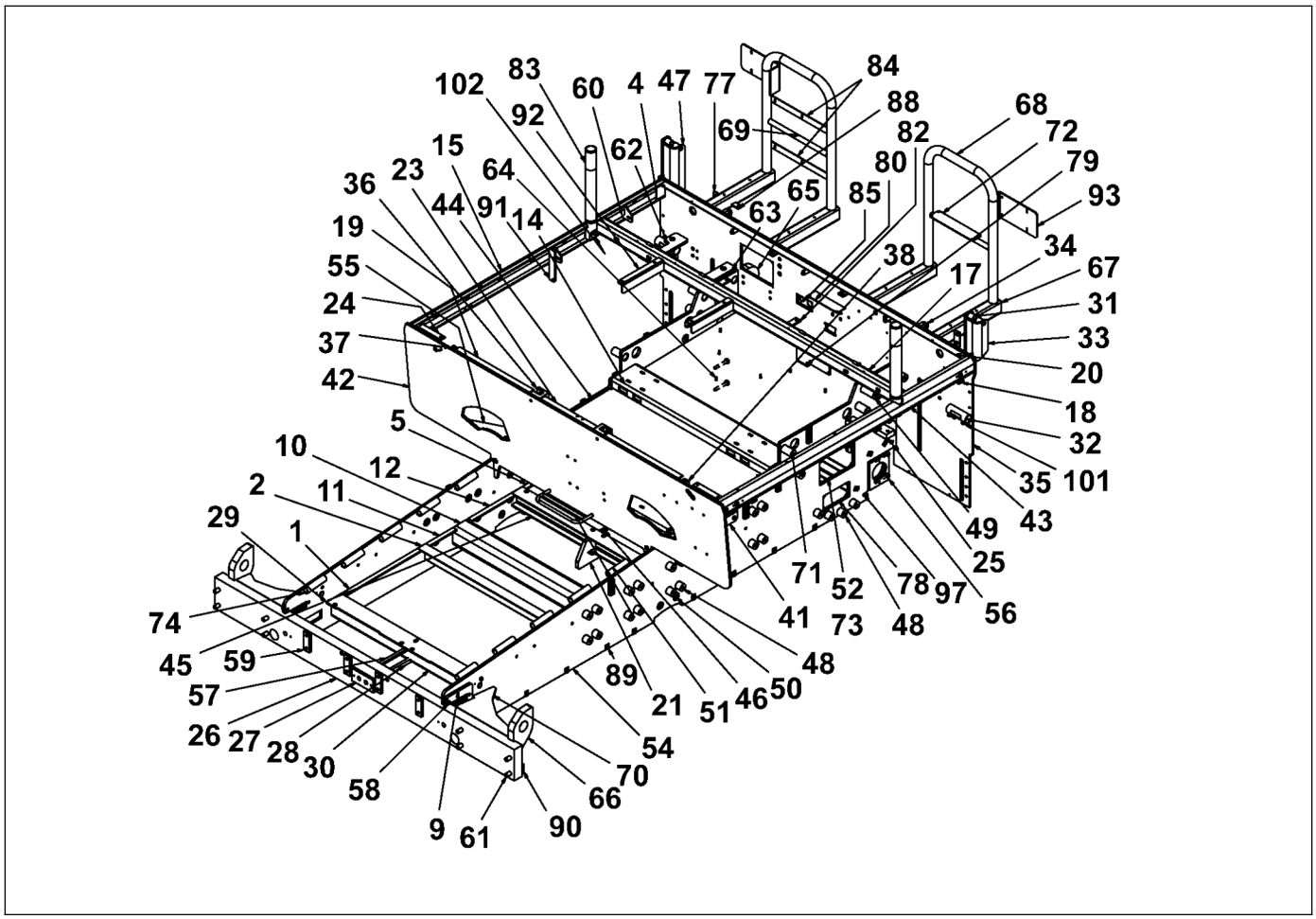

D717010500
Frame, main

Item	Part Number	Quantity	Description
1	D717010542	2	Support bar
2	D717010544	1	Bar
3	D717010548	1	Crossmember
4	D717010565	2	Plate
5	D717010549	2	Support
6	D717010563	1	Block
7	D717010566	1	Gusset
8	D717010543	2	Bar
9	D717010580	2	Plate
10	D717010584	1	Crossmember
11	D717010576	2	Plate, conveyor wear
12	D717010575	2	Plate, conveyor wear
13	D717010550	1	Crossmember
14	D717010552	1	Drive assembly mount
15	D717010534	1	Frame channel
16	D717010553	1	Drive assembly mount
17	D717010554	1	Console support tube
18	D717010587	1	Door leaf

Please check Table of Contents for use of this assembly

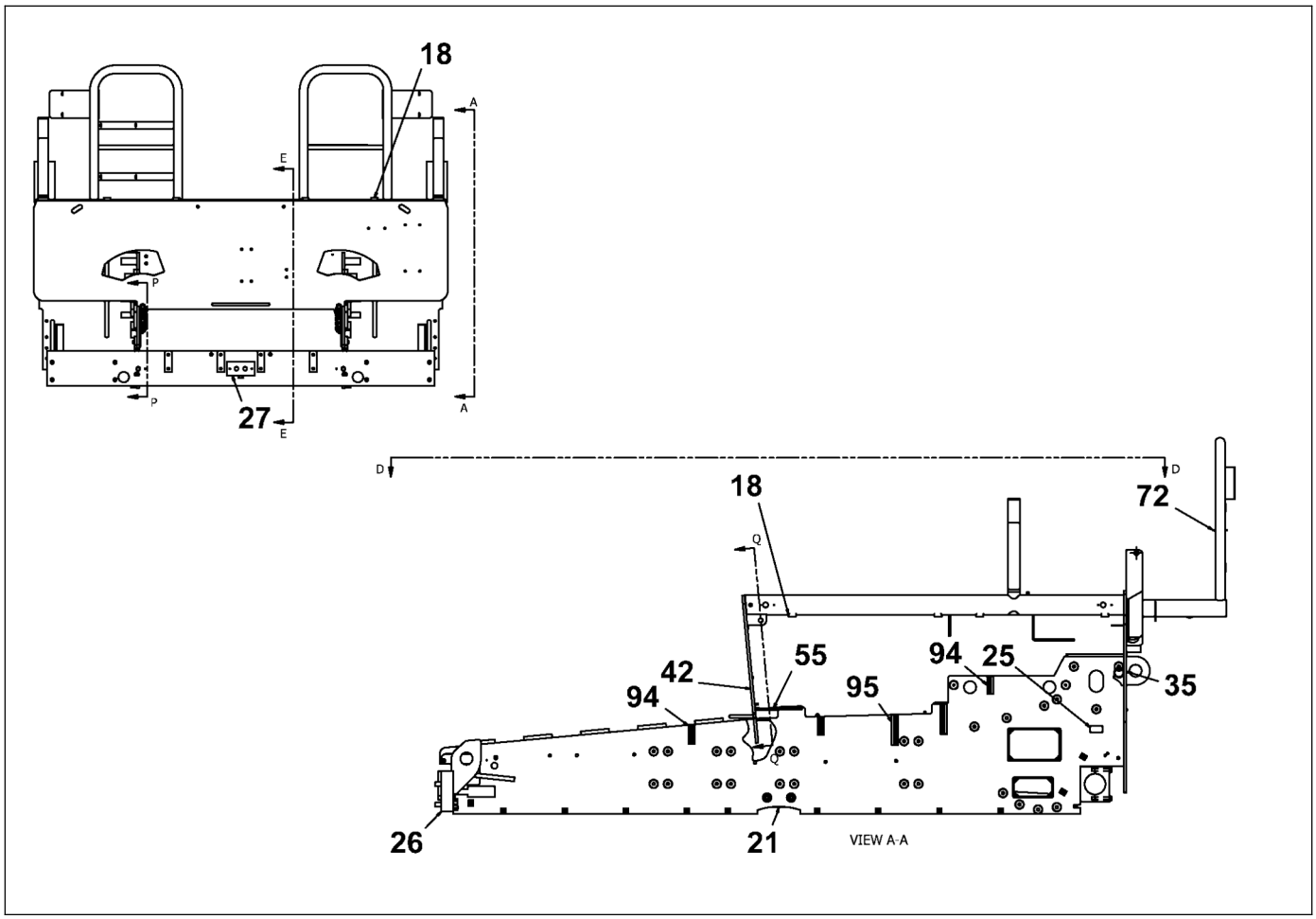

D717010500
Frame, main

Item	Part Number	Quantity	Description
19	D717010579	2	Hood support bar
20	D717010573	1	Door lip
21	D717010574	1	Chain slide mount
22	D717010567	1	Mounting plate
23	D717010588	1	Hood support bar
24	D717010589	2	Hood support angle
25	D717010590	2	Conveyor tension bracket
26	D717010529	1	Bumper
27	D717010592	1	Front adjuster plate
28	D717010538	1	Lower slide support
29	D717010540	1	Front conveyor plate
30	D717010539	1	Conveyor mount plate
31	D717010555	4	Spacer
32	D717010594	2	Screed support bar
33	D717010509	1	Screed anchor
34	D717010510	2	Auger lift cylinder anchor
35	D717010502	1	Rear wall
36	D717010521	2	Hopper lift cylinder mount

Please check Table of Contents for use of this assembly

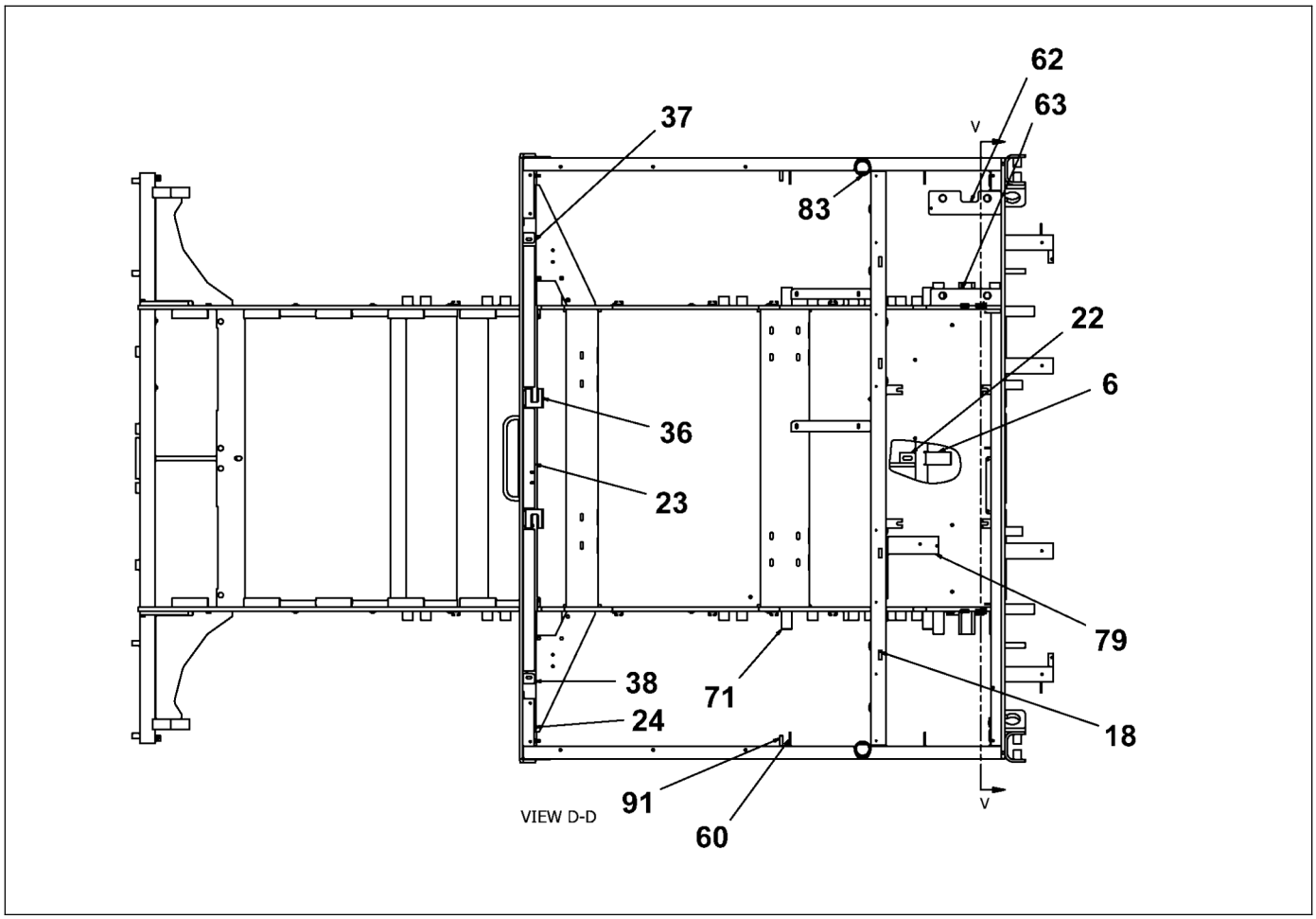

D717010500
Frame, main

Item	Part Number	Quantity	Description
37	D717010597	1	Hood frame support
38	D717010598	1	Hood frame support
41	D717010523	2	Tow arm cylinder mount
42	D717010522	1	Front wall
43	D717010530	1	Frame channel bar
44	D717010537	1	Tunnel deck plate
45	D717010595	1	Conveyor crossmember
46	D717010569	1	Spacer plate
47	D717010578	1	Screed lift cylinder anchor
48	D717010517	48	Threaded insert
49	D717010545	6	Threaded insert, 3/4"
50	D717010518	4	Threaded insert
51	D717070516	10	Hinge
52	D717010515	2	Insert
54	D717010512	2	Side wall
55	D717010586	2	Front wall gusset
56	D717010585	2	Conveyor bearing clamp
57	D717010541	1	Upper support

Please check Table of Contents for use of this assembly

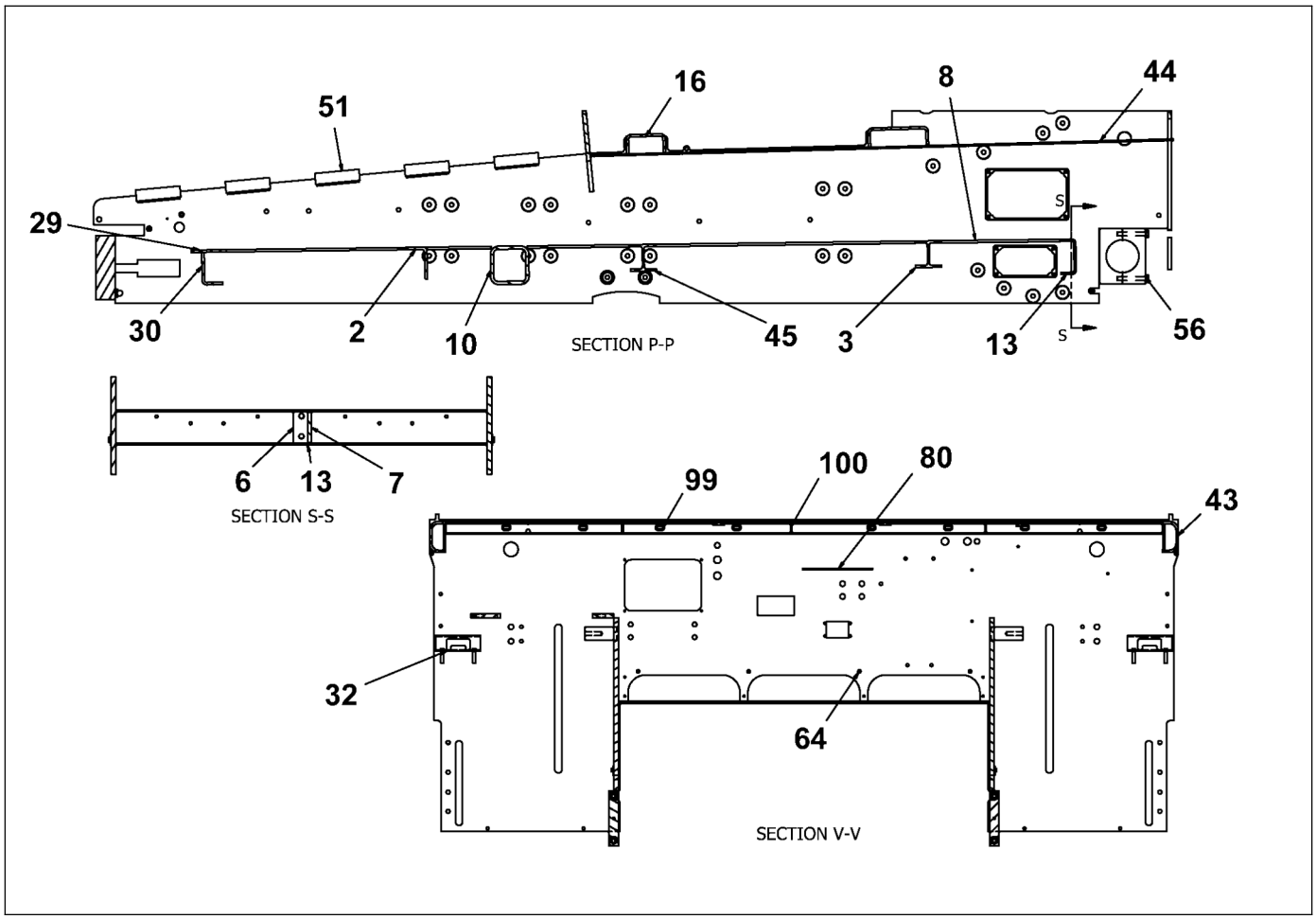

D717010500
Frame, main

Item	Part Number	Quantity	Description
58	D717010601	10	Nut, 1/2"
59	D717010603	4	Layton hitch pad
60	D717010602	4	Fuel tank mount plate
61	D717010604	8	Bumper guide standoff
62	D717010605	1	Generator mount
63	D717010606	1	Generator mount
64	D717170566	18	Stud, 3/8"
65	D717010607	2	Rear lift lug
66	D717010577	2	Front lift lug
67	D717010609	4	Handrail mount
68	D717010610	2	Rear handrail
69	D717010611	2	Mid handrail
70	D717010614	2	Frame stiffener
71	D717010615	4	Fuel tank standoff
72	D717010624	1	Washdown system mount
73	D717010627	22	Nut, 0.31"
74	D717010628	10	Reinforcement bar
75	D717010629	2	Feed sensor bracket mount

Please check Table of Contents for use of this assembly

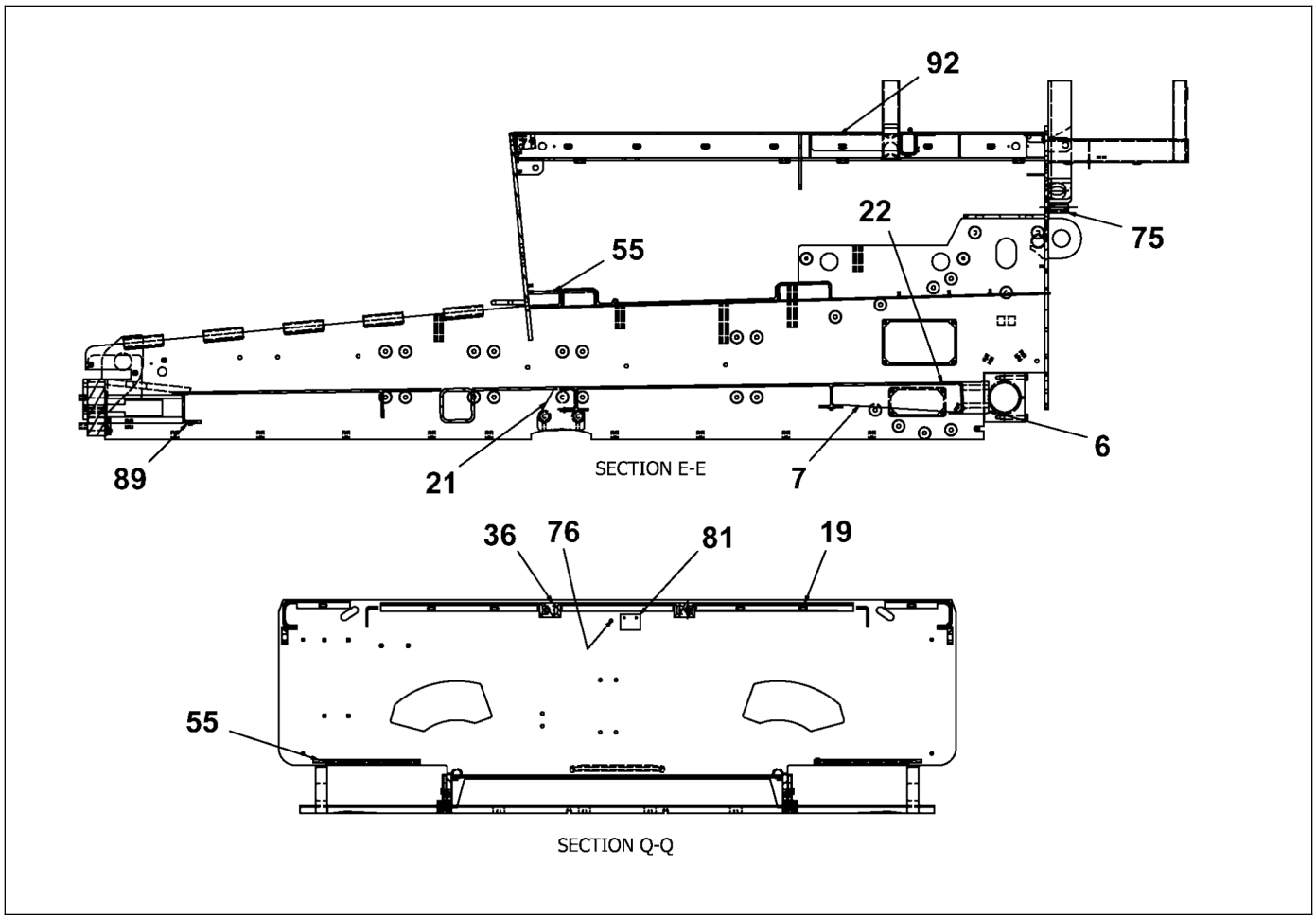

D717010500
Frame, main

Item	Part Number	Quantity	Description
76	D717070513	1	Stud. 0.38"
77	D717010633	2	Rear electric bracket
78	D717010631	2	Insert
79	D717010632	1	HIC hand pump bracket
80	D717104513	1	AC main panel plate
81	D717010635	1	Remote fuel filter mount
82	D717010637	4	Center weldment mount
83	D717010636	2	Console support bar
84	D717010634	2	AC box mount
85	D717010638	1	Wire grommet plate
86	D717085049	3	Nut, 3/16"
88	D717010640	2	Auger hose routing plate
89	D717064509	52	Weld plate
90	D717064510	2	Grease block
91	D717010641	2	Doorstop mount plate
92	D717010644	2	Battery box bracket
93	D717010643	2	Slow vehicle sign bracket
94	D717010642	6	C-rail

Please check Table of Contents for use of this assembly

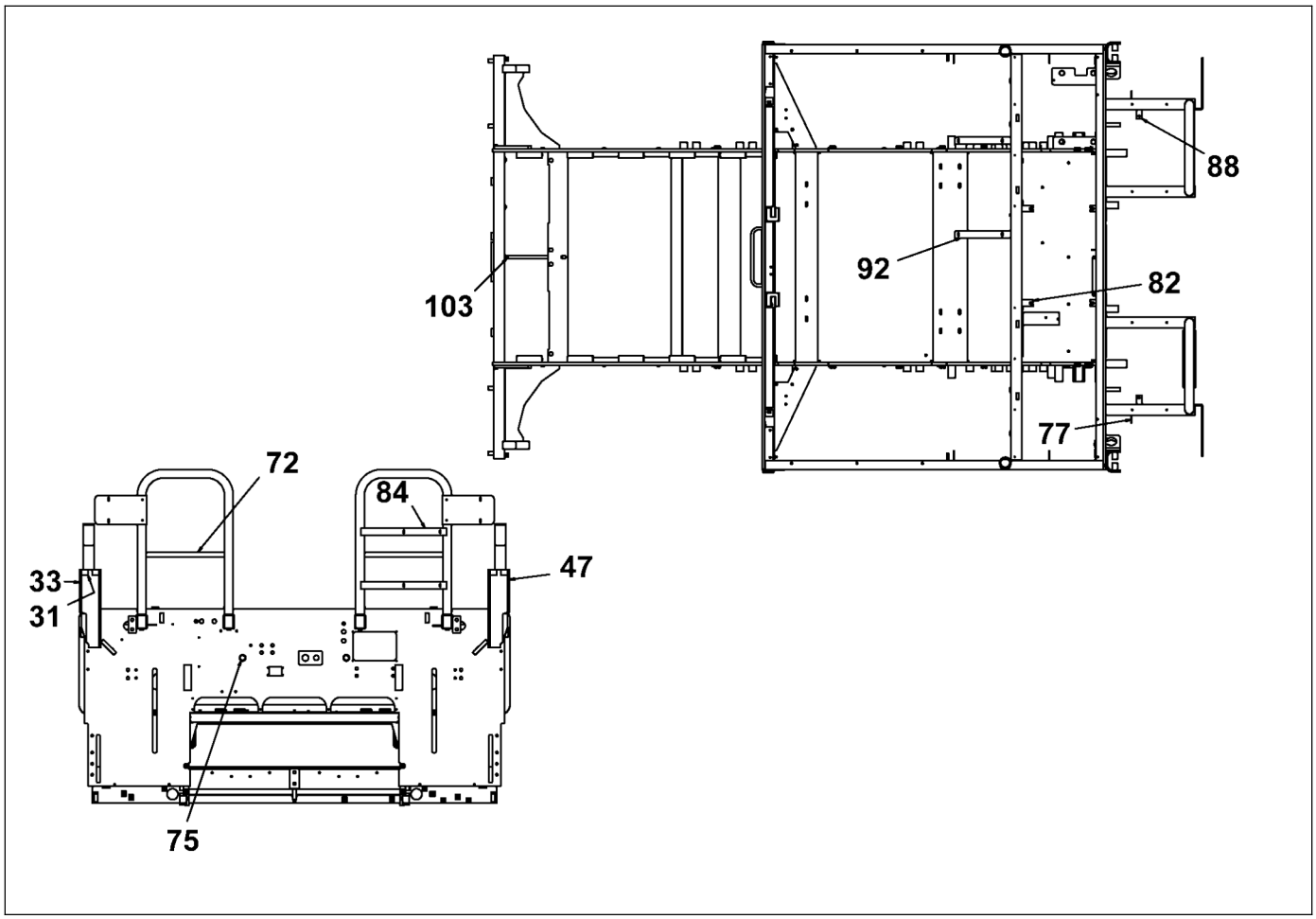

D717010500
Frame, main

Item	Part Number	Quantity	Description
95	D717010646	4	C-rail
96	D717010645	2	C-rail
97	D717801324	2	Nut, 1/2"
98	D717010649	2	Rear tie-down lug
99	D717010650	47	Harness tie-down lug
100	D717010651	3	Platform doors staple
101	4812220568	4	Plate, screed support
102	4812220697	2	Plate, cover console
103	4812220843	1	Block, grease main frame

Please check Table of Contents for use of this assembly

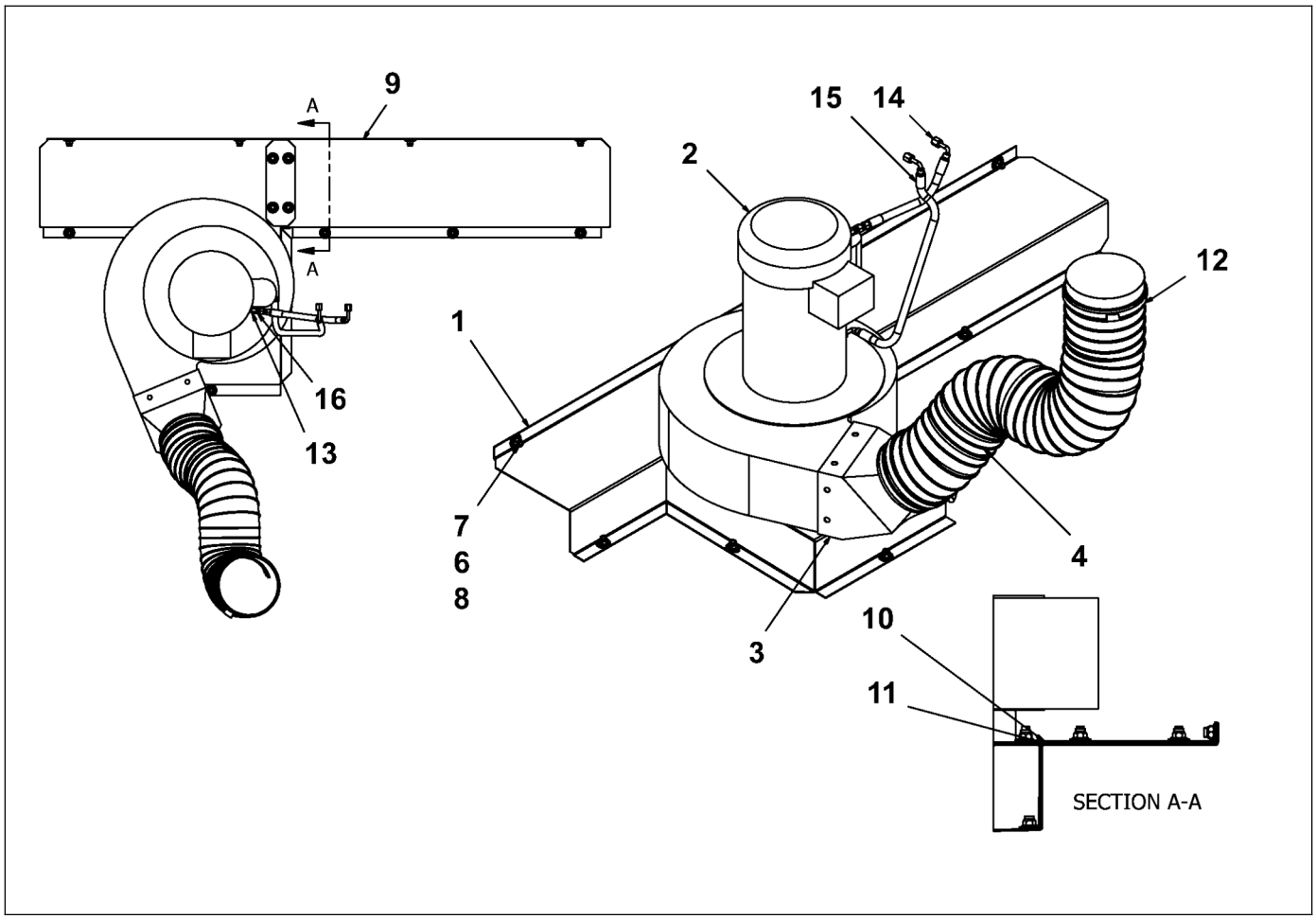

D717012500
Fume extractor

Item	Part Number	Quantity	Description
1	D717012502	1	Fume extractor
2	D717012501	1	Blower fume extractor
3	D717012505	1	Transition, fume extractor
4	D717012506	1	Duct, flex
6	D717801044	23	Narrow washer, 0.38"
7	D717800834	23	Lock nut, 3/8"
8	D717801086	23	Flat washer, 0.5"
9	D717012509	1	Hood half
10	D717012510	1	Strip, hood transition
11	D717012511	1	Seal, fume transition
12	D717091021	2	Clamp, hose
13	4812221652	2	Adapter, 1/4"-1/8"
14	4812221068	1	Grease line, 4
15	4812221374	1	Grease line
16	4812221681	2	Adapter, 04-02
17	4812200227	1	Conduit hub
18	4812200228	1	Liquid-tight fitting

Please check Table of Contents for use of this assembly

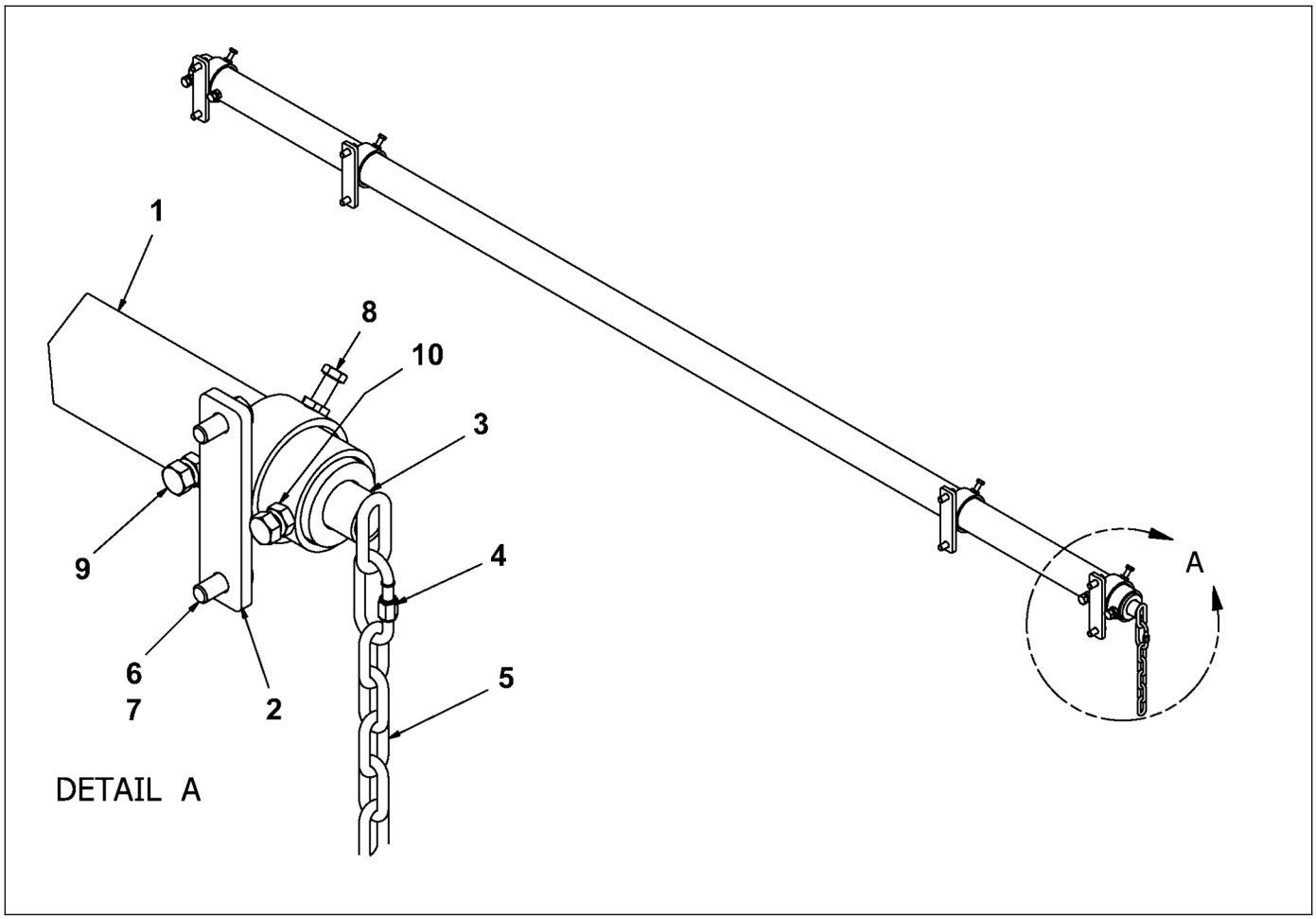

D717011500
Guide pole

Item	Part Number	Quantity	Description
1	D717011501	1	Paving guide pole
2	D717011506	4	Guide pole support
3	D717011519	1	Pole, steering guide inner
4	D717011522	1	Chain connecting link
5	D717011523	1	Chain, guide pole
6	D717801086	8	Flat washer, 0.5"
7	D717800743	8	Screw, 1/2"
8	D717800603	4	Screw, 3/8"
9	4812200052	4	Nut, 1/2"
10	4812200051	4	Cap screw, 1/2"

Please check Table of Contents for use of this assembly

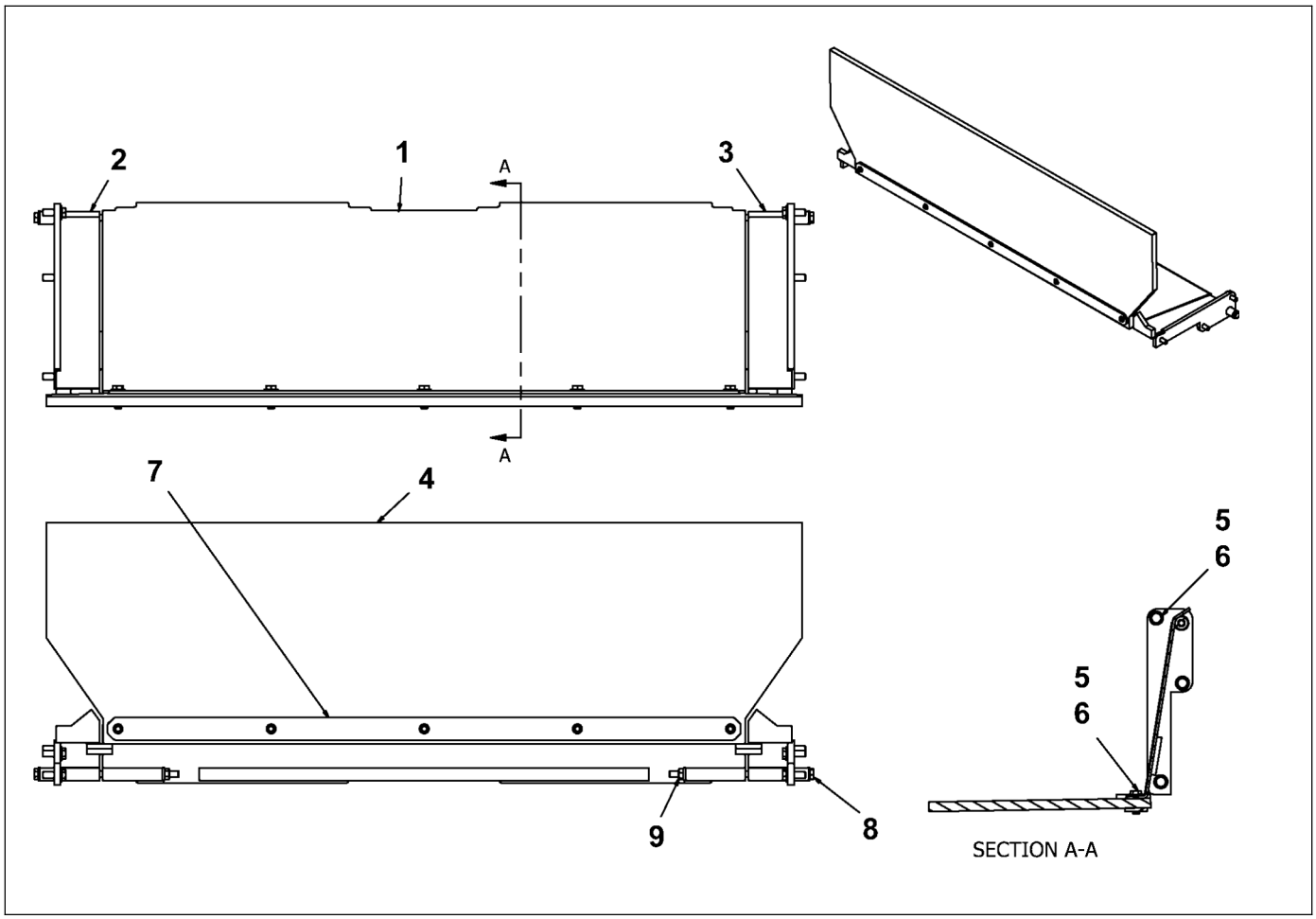

D717013000
Front conveyor cover

Item	Part Number	Quantity	Description
1	D717013001	1	Front conveyor
2	D717013010	1	Conveyor cover mount
3	D717013003	1	Conveyor cover mount
4	D717013012	1	Skirt, hopper front
5	D717801086	13	Flat washer, 0.5"
6	D717800736	11	Screw, 1/2"
7	D717013022	1	Front handle support
8	D717800722	2	Screw, 1/2"
9	D717801163	2	Nut, 1/2"

Please check Table of Contents for use of this assembly

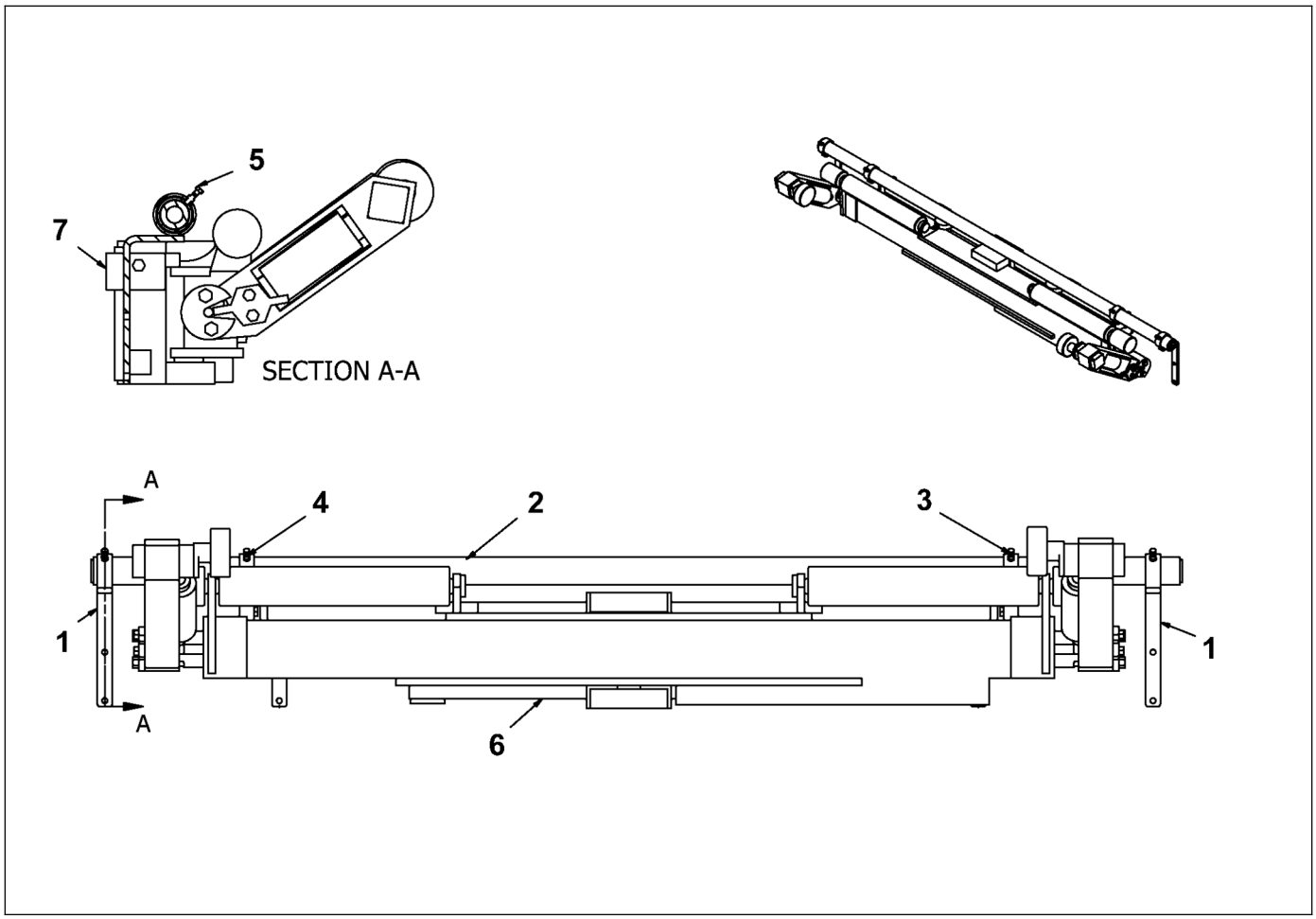

D717900500
Truck hitch

Item	Part Number	Quantity	Description
1	D717900502	2	Guide pole support
2	D717011501	1	Paving guide pole
3	D717900503	1	Guide pole support, left
4	D717900504	1	Guide pole support, right
5	D717801205	4	Screw, 3/8"
6	D717900501	1	Truck hitch
7	D717900505	2	Plate, truck hitch stop
8	D717900506	1	Hose list, truck hitch option
9	D717800645	4	Screw, 3/4"
10	D717800638	4	Screw, 3/4"
11	D717801072	8	Narrow washer, 0.75"
12	4812222611	2	Chain mount
13	D717801541	2	Fitting, 06-05
14	D717920702	2	Hose assy, 06
15	4812222607	7	P clamp

Please check Table of Contents for use of this assembly

4812221160
Push roller crosshead, 10'

Item	Part Number	Quantity	Description
1	4812221161	1	Crosshead
2	D717801051	2	Narrow washer, 0.313"
3	D717800561	2	Screw, 5/16"
4	D717011005	2	Roller
5	D717011007	2	Bearing bolt
6	D717011011	1	Pin
7	D717011015	2	Washer
8	D717801359	1	Cotter pin, 0.25"
9	D717011010	1	Plate, holder, push roller
10	D717011013	1	Washer, push roller
11	D717011004	4	Ring, spacer
12	D717801828	2	Screw, 3/4"
13	D717801072	4	Narrow washer, 0.75"
14	D717800841	2	Lock nut, 3/4"

Please check Table of Contents for use of this assembly

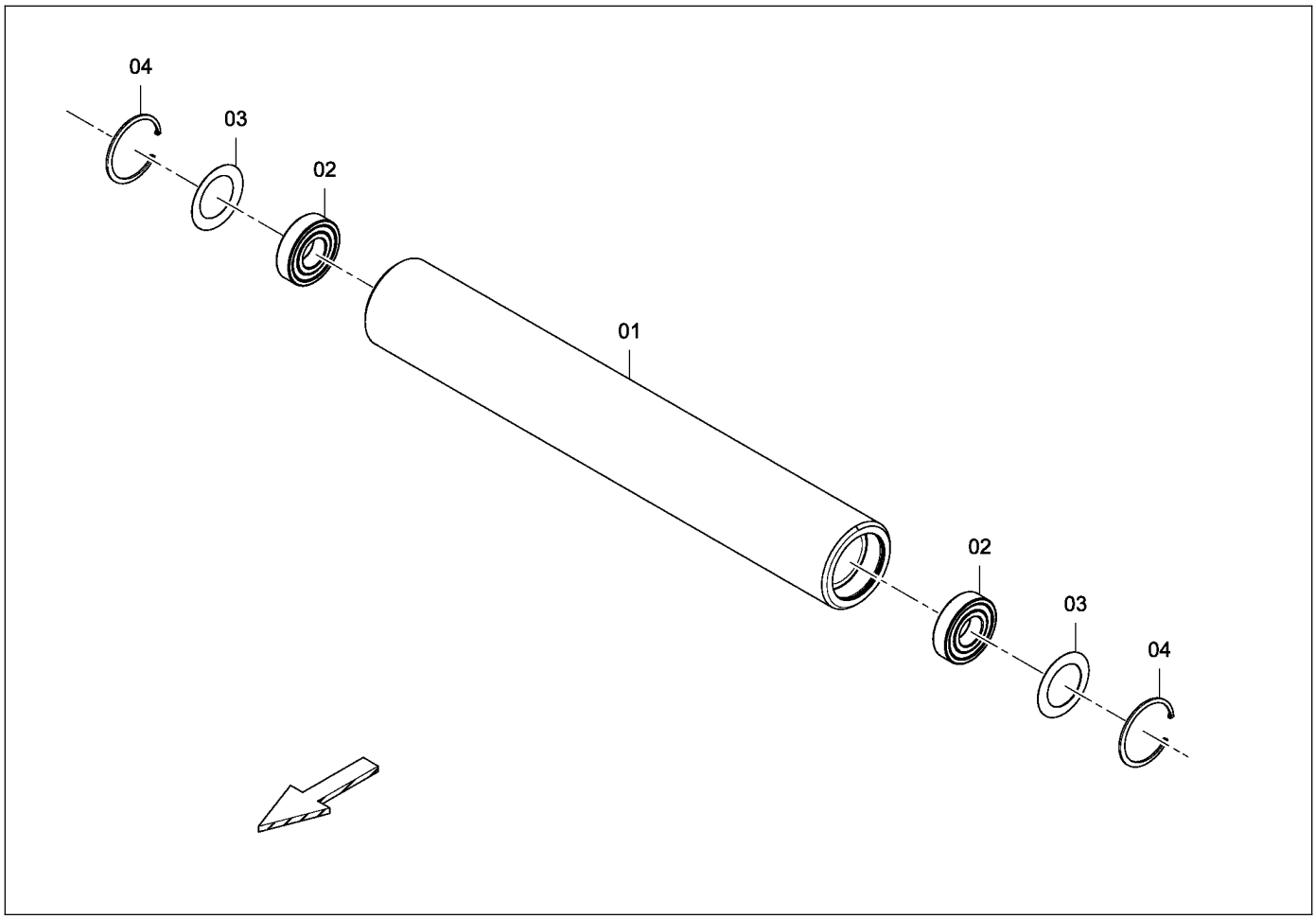

D717011005
Roller

Item	Part Number	Quantity	Description
1	D717011006	1	Roller
2	D717011014	2	Bearing, push roller
3	D717011016	2	Disc spring
4	D717800435	2	Snap ring

Please check Table of Contents for use of this assembly

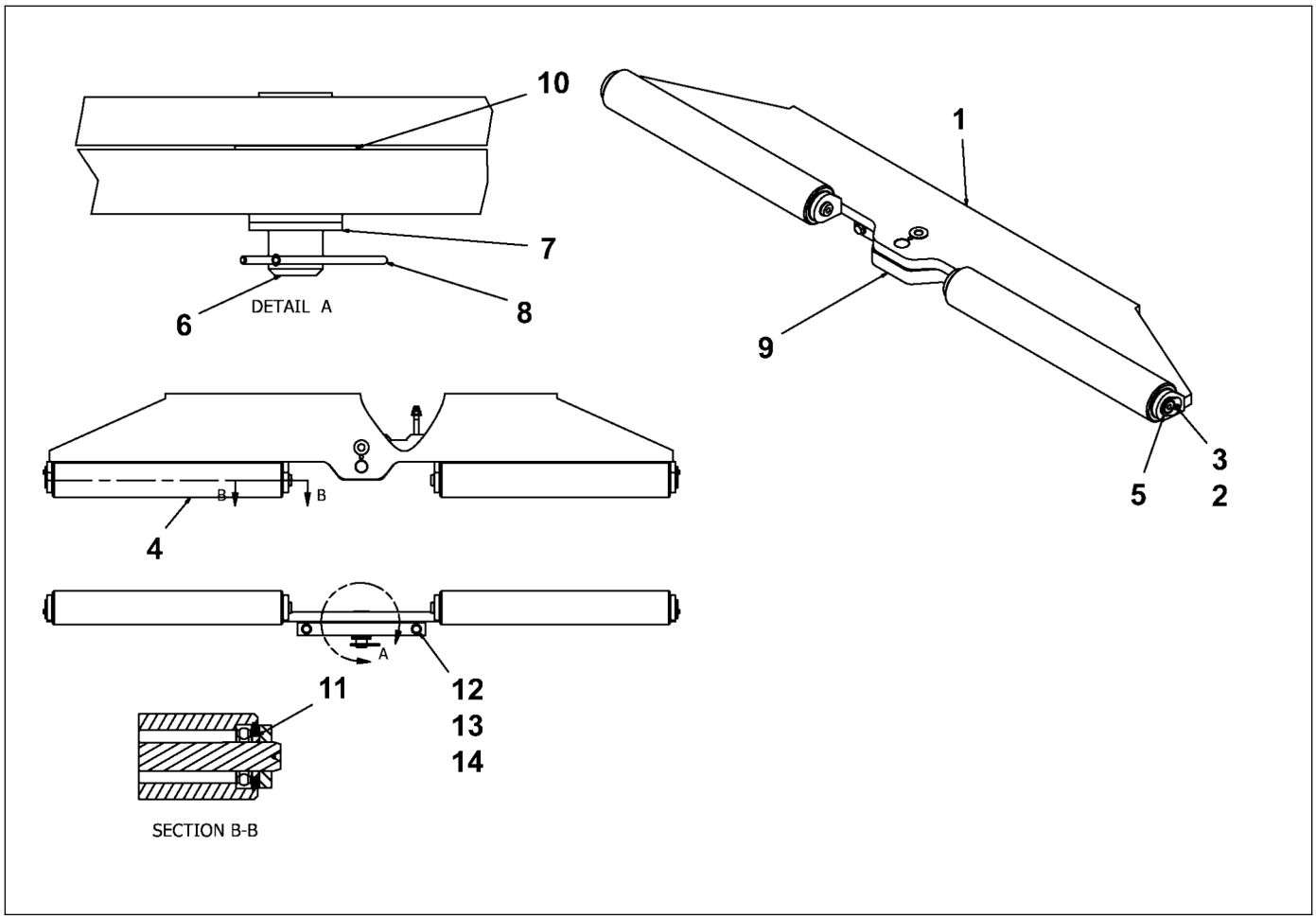

D717011000
Push roller crosshead, 8'

Item	Part Number	Quantity	Description
1	D717011001	1	Traverse
2	D717801051	2	Narrow washer, 0.313"
3	D717800561	2	Screw, 5/16"
4	D717011005	2	Roller
5	D717011007	2	Bearing bolt
6	D717011011	1	Pin
7	D717011015	2	Washer
8	D717801359	1	Cotter pin, 0.25"
9	D717011010	1	Plate, holder, push roller
10	D717011013	1	Washer, push roller
11	D717011004	4	Ring, spacer
12	D717801828	2	Screw, 3/4"
13	D717801072	4	Narrow washer, 0.75"
14	D717800841	2	Lock nut, 3/4"

Please check Table of Contents for use of this assembly

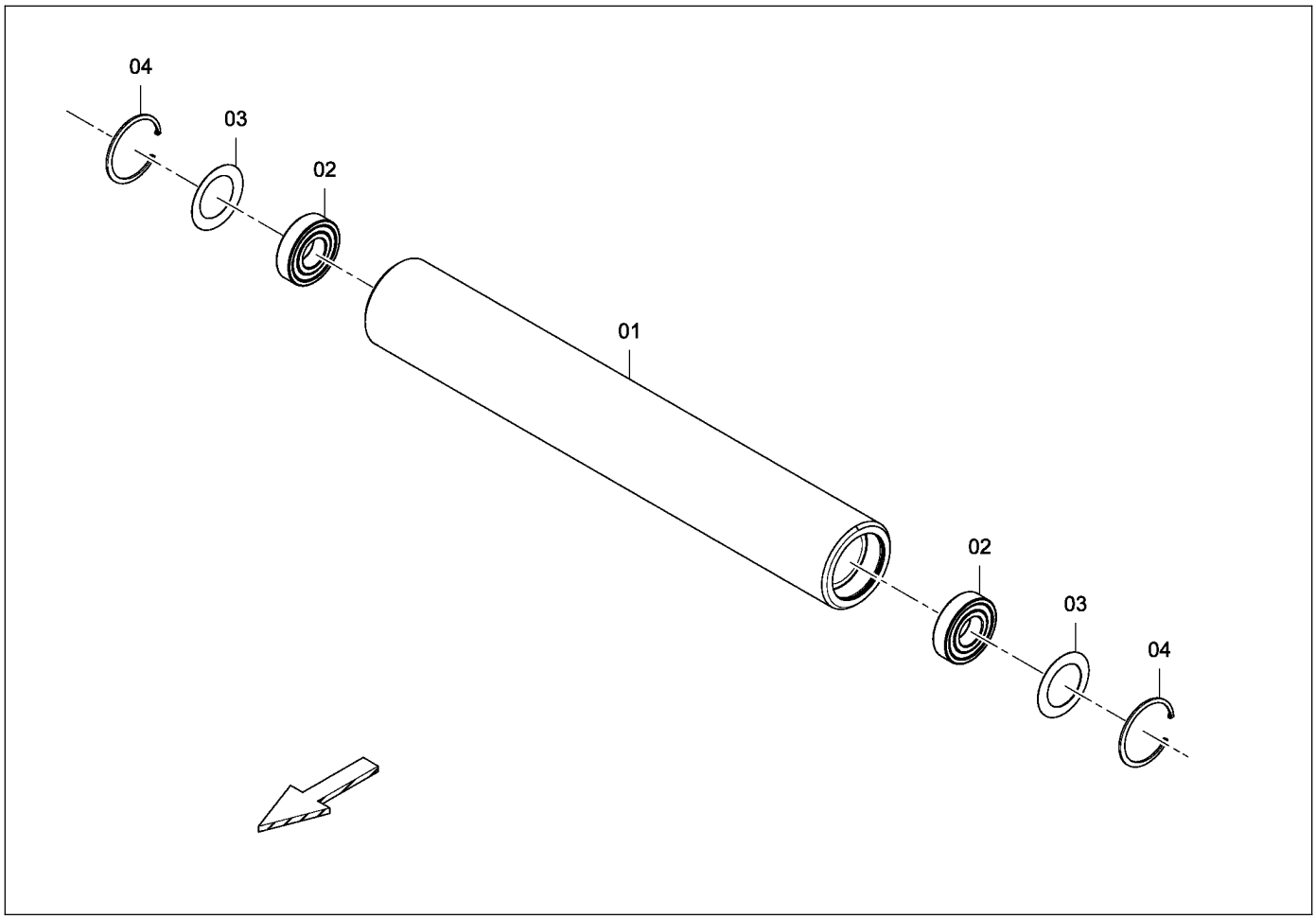

D717011005
Roller

Item	Part Number	Quantity	Description
1	D717011006	1	Roller
2	D717011014	2	Bearing, push roller
3	D717011016	2	Disc spring
4	D717800435	2	Snap ring

Please check Table of Contents for use of this assembly

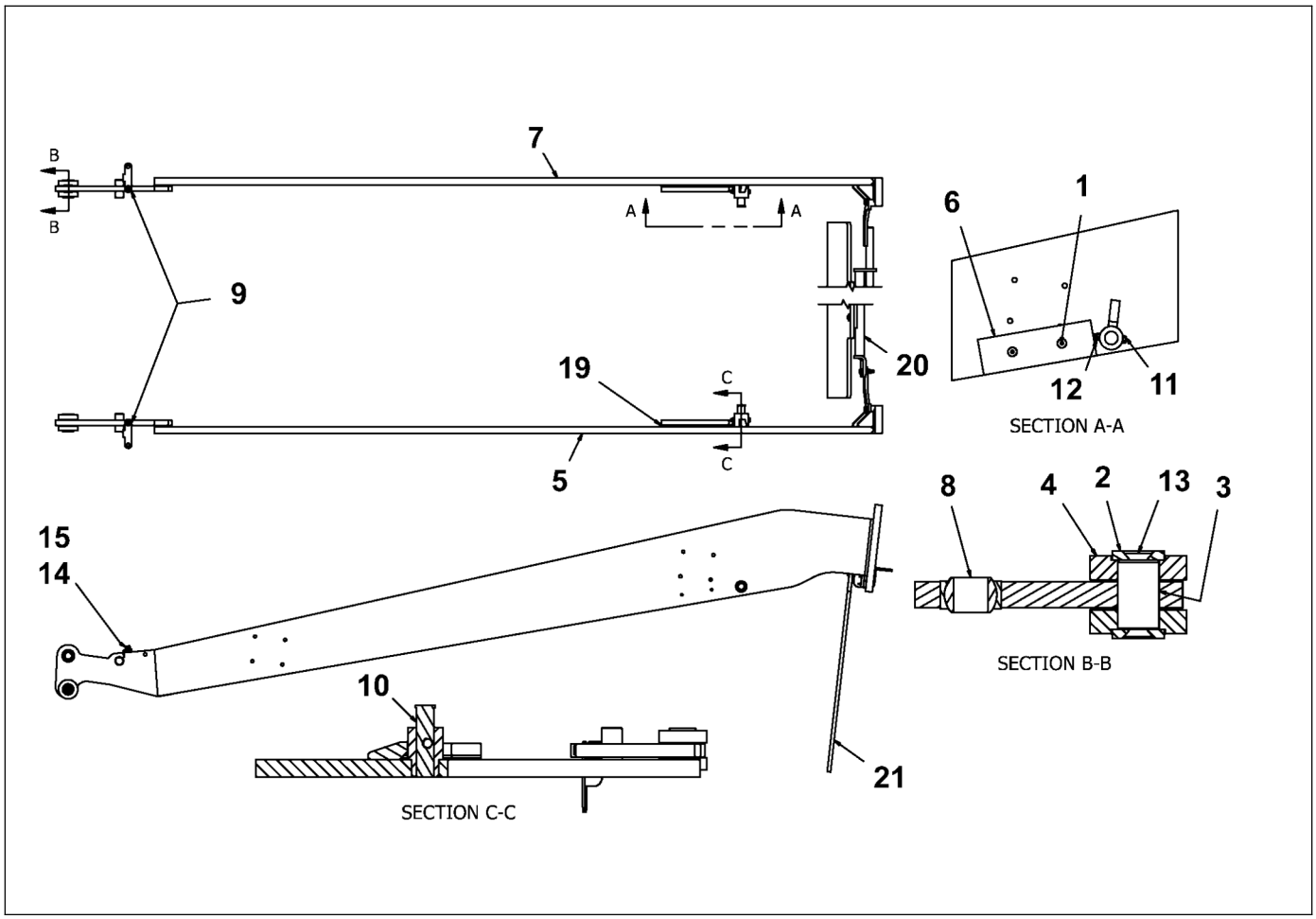

D717040000
Screed arm

Item	Part Number	Quantity	Description
1	D717802444	4	Screw, 3/8"
2	D717041004	4	Washer, 0.75"
3	4812200262	2	Roller spacer
4	4812200263	4	Roller, screed arm
5	D717040501	1	Screed arm, left
6	D717040513	2	Plate, slider
7	D717041001	1	Screed arm, right
8	D717040509	2	Ball bearing
9	D717041005	2	Plate, tow point gage pointer
10	D717040514	2	Pin, screed cylinder pivot
11	D717801198	2	Hex bolt, 5/16"
12	D717800904	2	Lock nut, 5/16"
13	D717801303	4	Screw, 1/2"
14	D717801044	2	Narrow washer, 0.38"
15	D717800834	2	Lock nut, 3/8"
19	D717040515	4	Shim
20	D717040518	1	Slope arm
21	4812221580	1	Rubber pad

Please check Table of Contents for use of this assembly

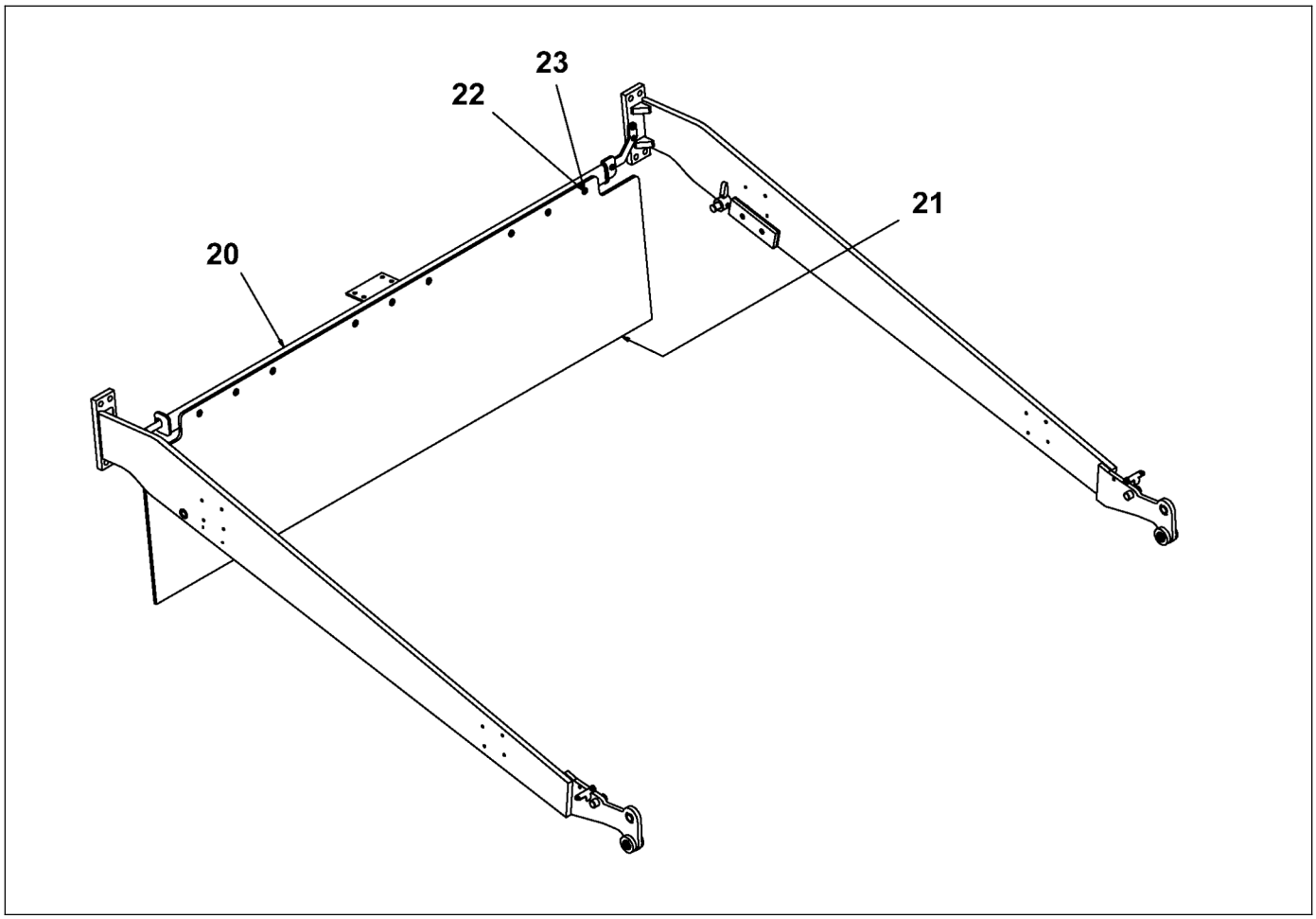

D717040000
Screed arm

Item	Part Number	Quantity	Description
22	D717801716	9	Washer, 1/4"
23	D717800680	9	Screw, 1/4"
24	4812200218	2	Spacer

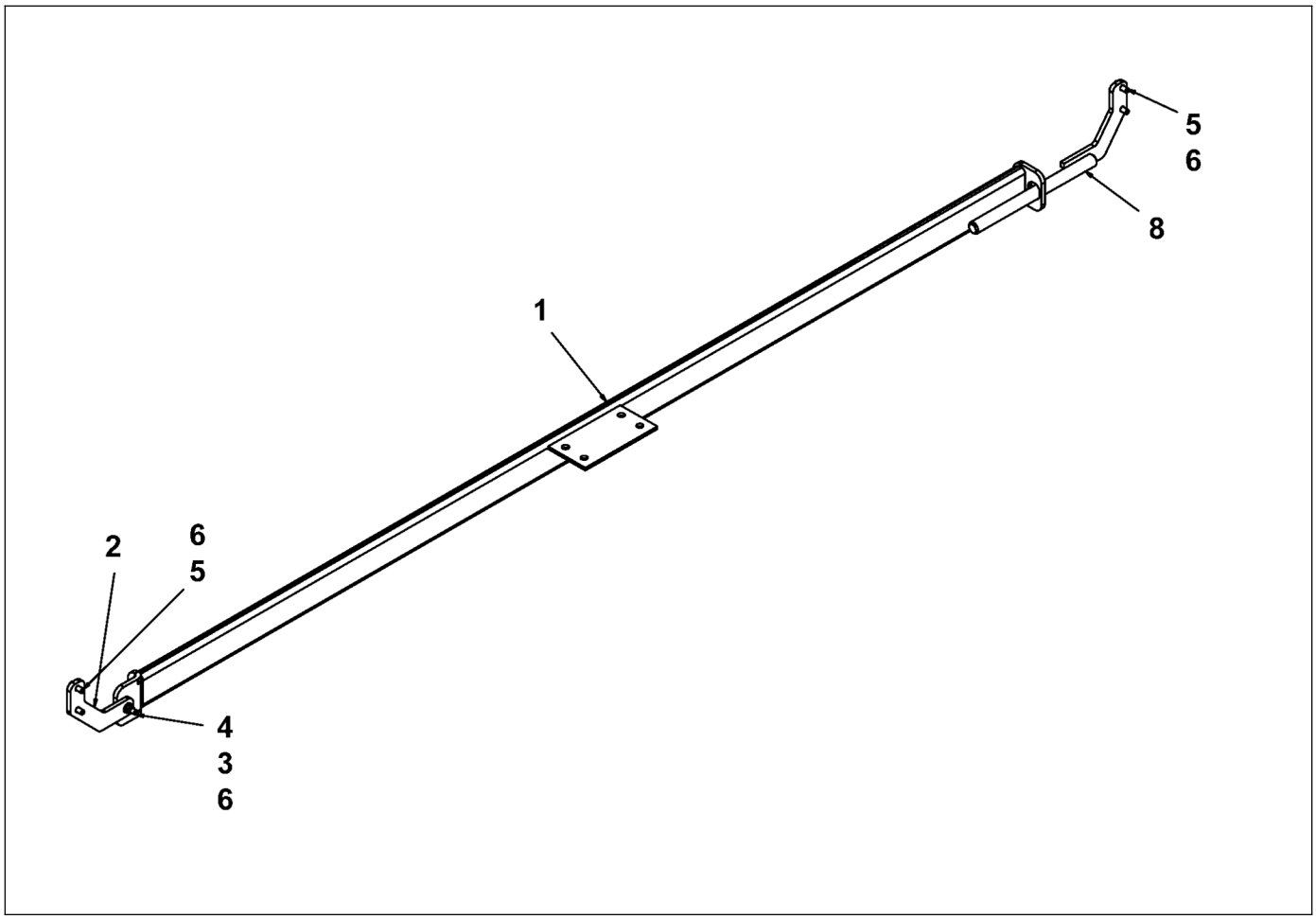

D717040518
Slope arm

Item	Part Number	Quantity	Description
1	4812200221	1	Slope beam
2	4812200219	1	Slope beam mount
3	D717800834	1	Lock nut, 3/8"
4	D717801653	1	Hex head screw, 3/8"
5	4812222233	4	Screw, 3/8"
6	D717801044	6	Narrow washer, 0.38"
8	4812200222	1	Slide

Please check Table of Contents for use of this assembly

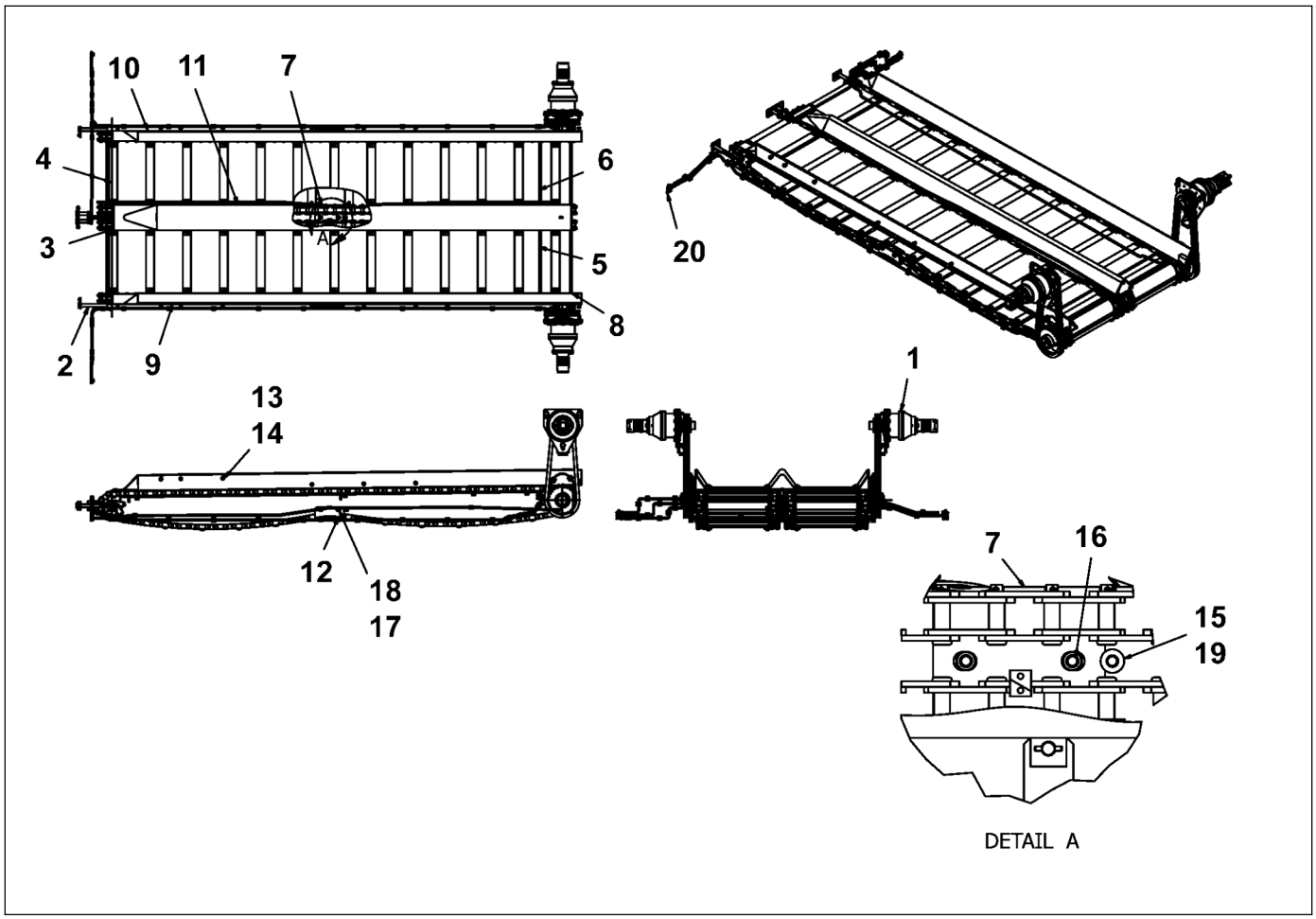

D717060000
Conveyor

Item	Part Number	Quantity	Description
1	D717061000	1	Conveyor drive
2	D717060501	1	Tension assembly
3	D717060005	1	Floor, front left
4	D717060007	1	Floor, front right
5	D717060009	1	Floor, rear left
6	D717060011	1	Floor, rear right
7	D717060001	1	Middle chain support
8	D717061500	2	Conveyor chain
9	D717060018	1	Guide plate, left
10	D717060013	1	Guide plate, right
11	D717060020	2	Guide plate, middle
12	D717060004	2	Outer chain support
13	D717801086	14	Flat washer, 0.5"
14	D717800729	14	Screw, 1/2"
15	D717801079	6	Narrow washer, 0.625"
16	D717800519	2	Screw, 5/8"
17	D717801072	4	Narrow washer, 0.75"
18	D717801086	4	Flat washer, 0.5"

Please check Table of Contents for use of this assembly

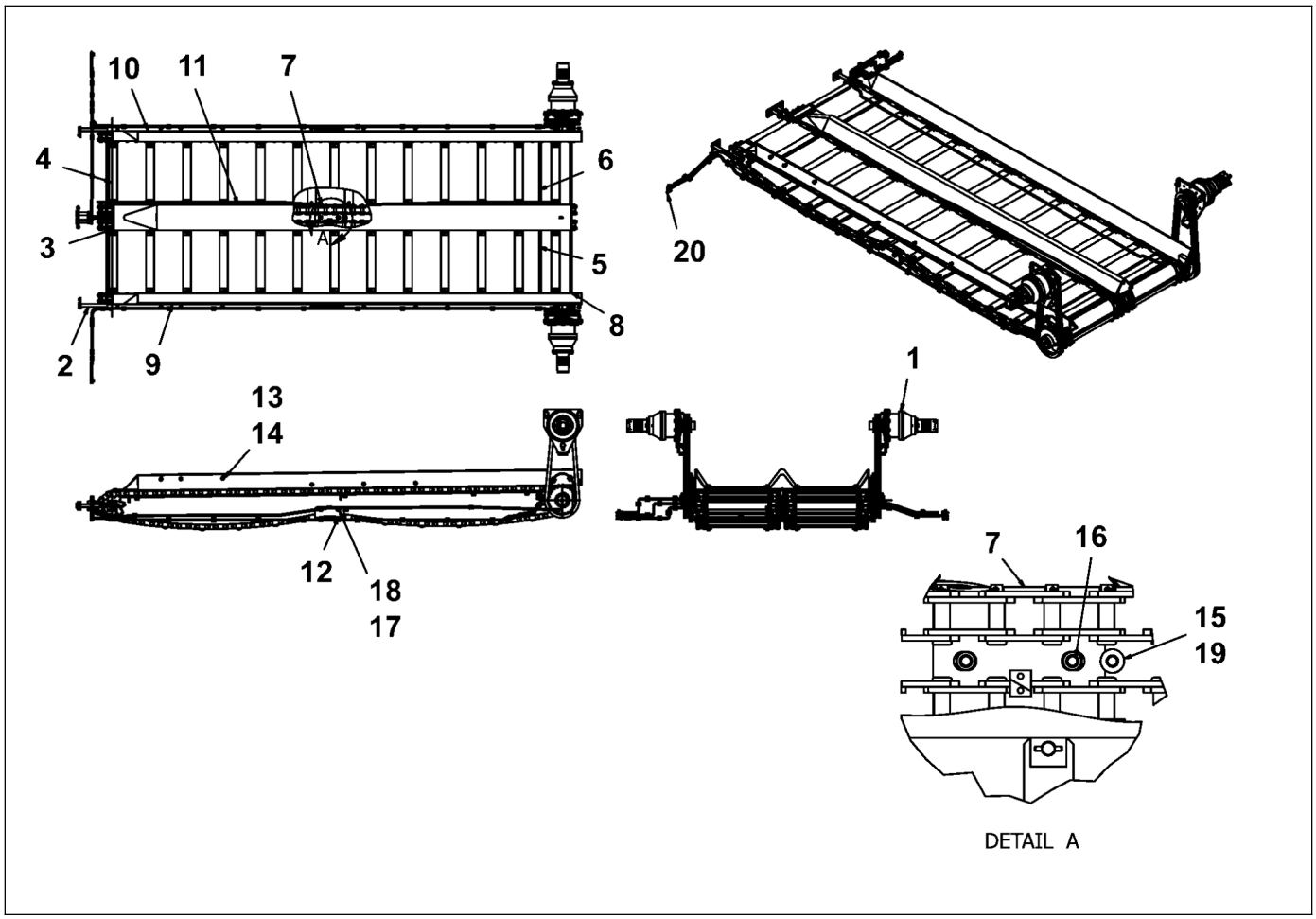

D717060000
Conveyor

Item	Part Number	Quantity	Description
19	D717801667	4	Hex head screw, 5/8"
20	D717064500	1	Conveyor Lubrication
	D717952332	1	Conveyor drive chain kit
	D717952339	1	Conveyor chain kit
	D717952346	1	Conveyor guide kit
	D717952353	1	Wear plate kit
	D717952360	1	Conveyor sprocket kit

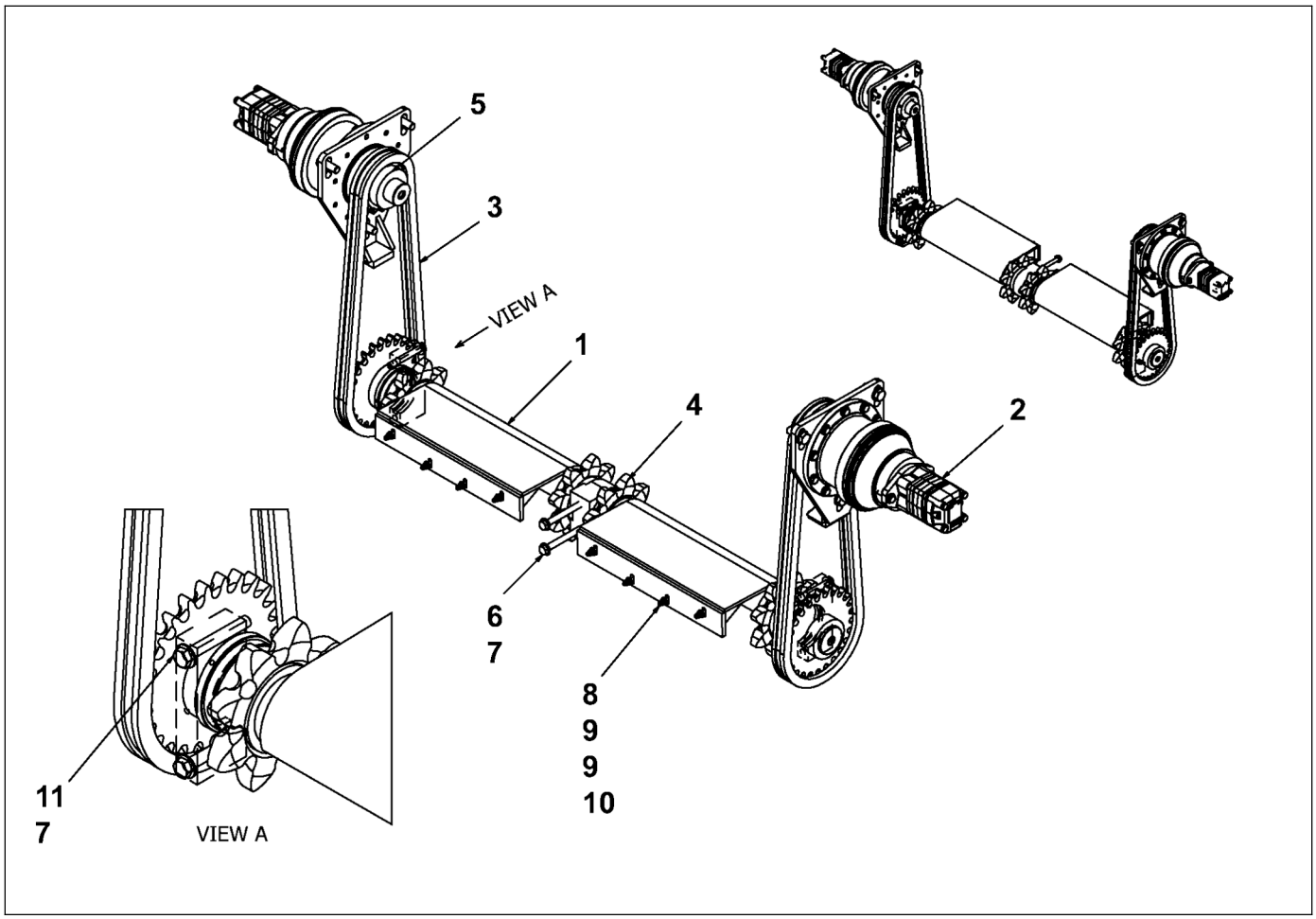

D717061000
Conveyor drive

Item	Part Number	Quantity	Description
1	D717061005	2	Conveyor drive cover
2	D717061009	2	Motor and gear box
3	D717061017	2	Roller chain
4	D717061018	1	Drive, conveyor
5	D717061001	2	Sprocket, no. 100
6	D717802094	2	Screw, 5/8"
7	D717801079	2	Narrow washer, 0.625"
8	D717801653	8	Hex head screw, 3/8"
9	D717801044	16	Narrow washer, 0.38"
10	D717800834	8	Lock nut, 3/8"
11	D717801674	4	Screw, 5/8"

Please check Table of Contents for use of this assembly

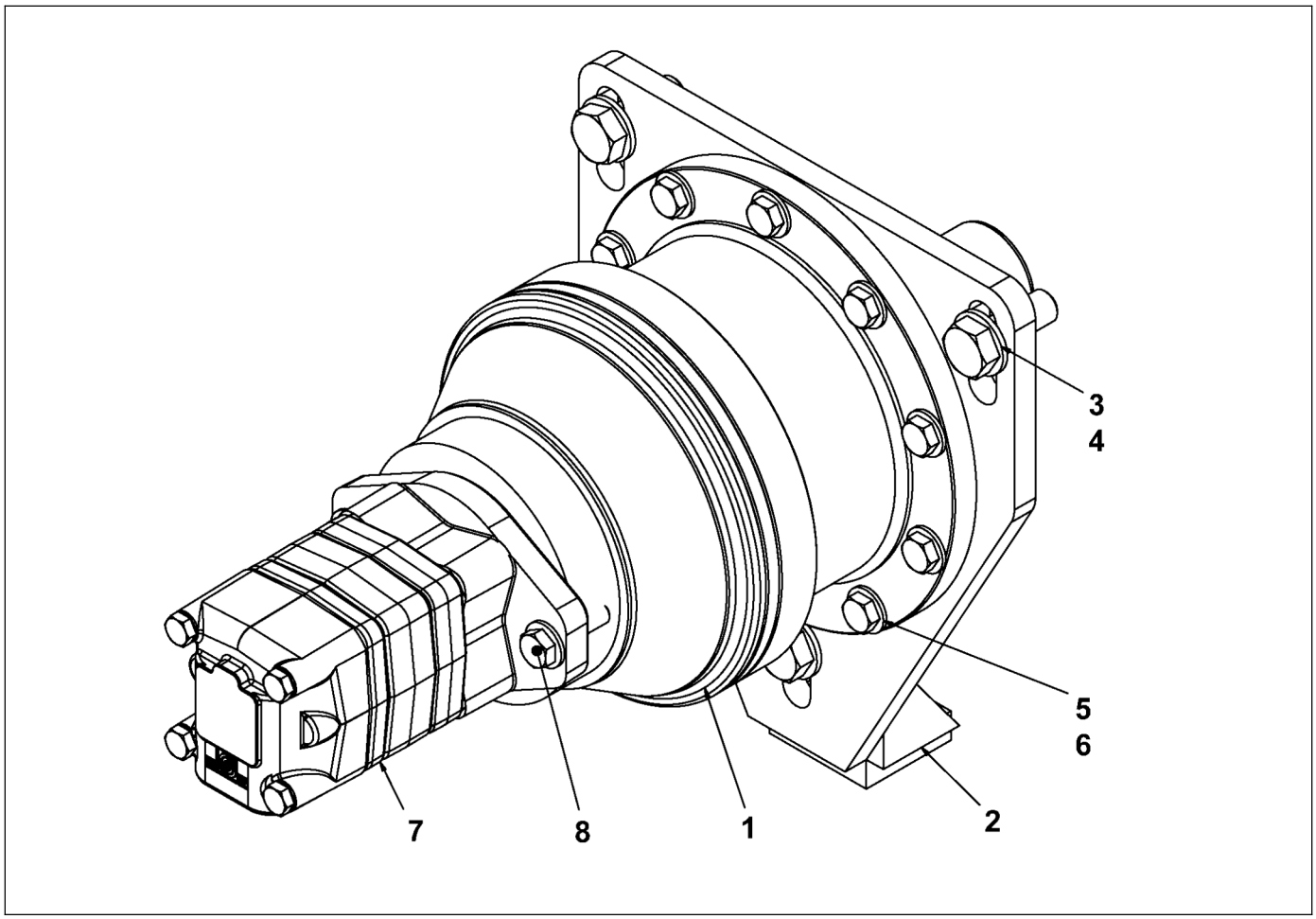

D717061009
Motor and gear box

Item	Part Number	Quantity	Description
1	D717061012	1	Gearbox
2	D717061013	1	Mount
3	D717801072	3	Narrow washer, 0.75"
4	D717800638	3	Screw, 3/4"
5	D717801086	12	Flat washer, 0.5"
6	D717800736	10	Screw, 1/2"
7	D717061035	1	Motor
8	D717800729	2	Screw, 1/2"

Please check Table of Contents for use of this assembly

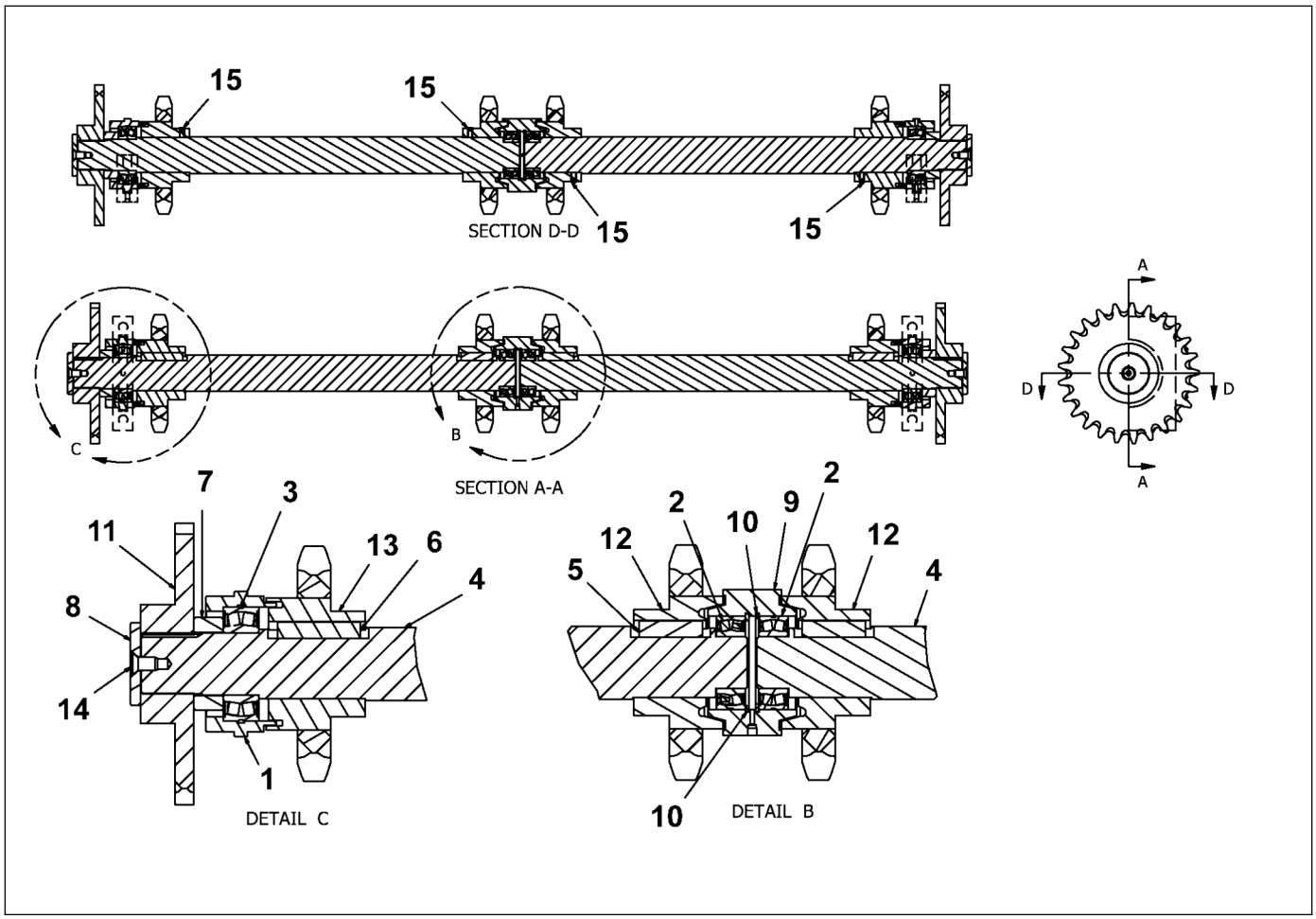

D717061018
Drive, conveyor

Item	Part Number	Quantity	Description
1	D717061002	2	Housing, end bearing
2	D717061003	2	Bearing, conveyor drive middle
3	D717061004	2	Bearing, conveyor drive end
4	D717061021	2	Drive shaft
5	D717061022	2	Key, 2.375"
6	D717061023	2	Key, 3.125"
7	D717061024	2	Spacer, outer conv sprocket
8	D717061025	2	Cap, shaft end
9	D717061026	1	Housing, bearing
10	D717061028	2	Snap ring
11	D717061029	2	Sprocket
12	D717061030	2	Sprocket & hub
13	D717061033	2	Sprocket & hub
14	D717801303	2	Screw, 1/2"
15	D717802416	4	Screw, 3/8"

Please check Table of Contents for use of this assembly

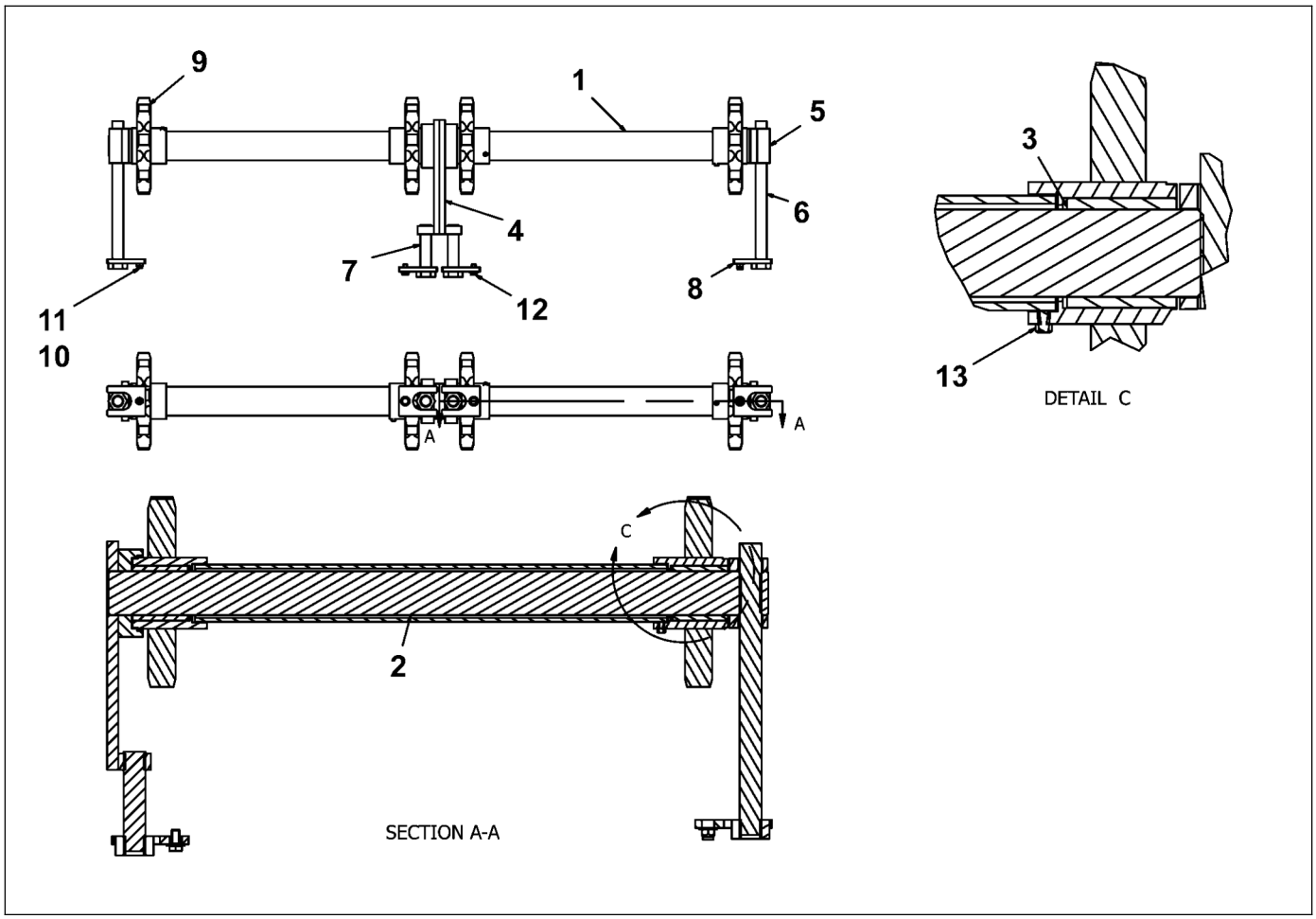

D717060501
Tension assembly

Item	Part Number	Quantity	Description
1	D717060502	2	Housing, shaft spacer
2	D717060503	2	Shaft, conveyor roller
3	D717060504	4	Bearing, shaft
4	D717060505	2	Inner shaft slide
5	D717060508	2	Slide, outer shaft
6	D717060511	2	Bolt adjuster, outer
7	D717060512	2	Bolt adjuster, inner
8	D717060513	4	Tab, adjuster lock
9	D717060515	4	Sprocket
10	D717801044	4	Narrow washer, 0.38"
11	D717800834	2	Lock nut, 3/8"
12	D717800617	2	Screw, 3/8"
13	D717802101	4	Set screw, 3/8"
16	D717802101	4	Set screw, 3/8"

Please check Table of Contents for use of this assembly

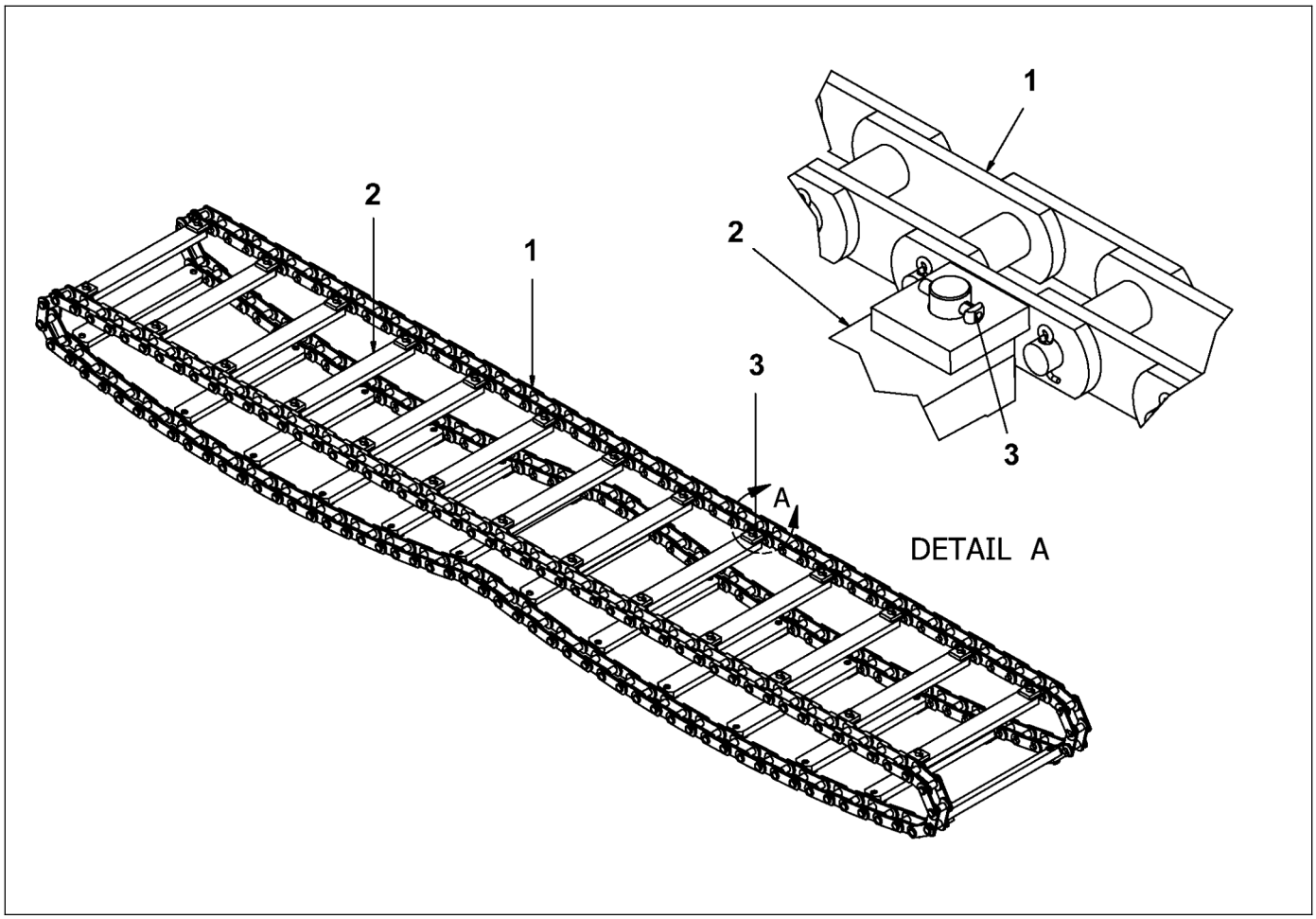

D717061500
Conveyor chain

Item	Part Number	Quantity	Description
1	D717061501	2	Chain
2	D717061502	26	Conveyor crossbar
3	4812200009	52	Lock pin

Please check Table of Contents for use of this assembly

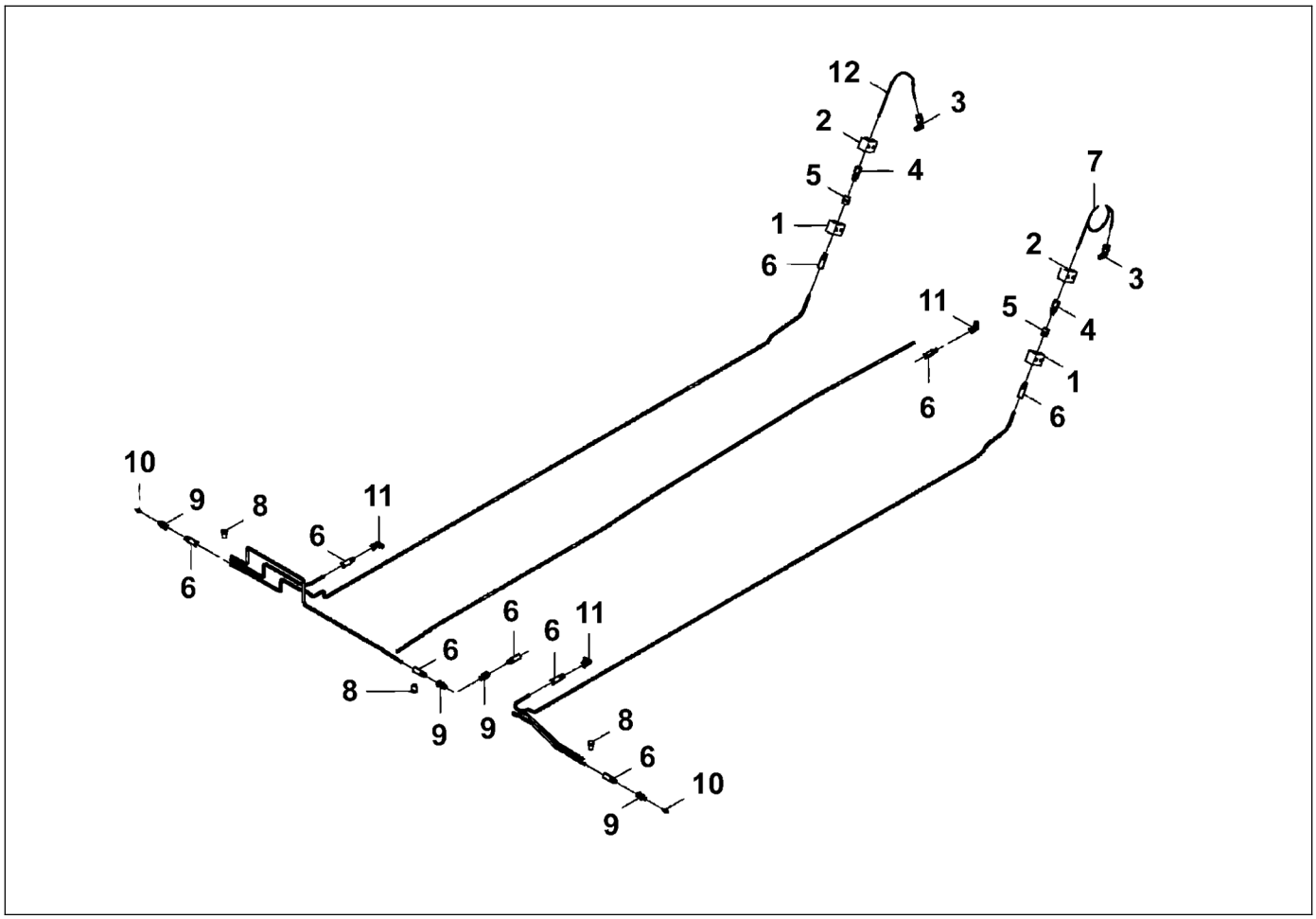

D717064500
Conveyor Lubrication

Item	Part Number	Quantity	Description
1	D717064508	46	Clamp, stauff
2	D717064507	4	Clamp, stauff
3	D717064501	1	Hard line, grease
4	D717064505	2	Elbow, flareless
5	D717064506	2	Male connector, straight flareless
6	D717064504	2	Coupling, pipe
7	D717064503	12	Hose end
8	D717064502	1	Hard line, grease
9	D717064511	12	Plug, pipe
10	D717064512	7	Connector, straight
11	D717061027	5	Zerk
12	D717064513	2	Elbow, pipe

Please check Table of Contents for use of this assembly

D717952332
Conveyor drive chain kit

Item	Part Number	Quantity	Description
1	D717061001	2	Sprocket, no. 100
2	D717061017	2	Roller chain
3	D717061029	2	Sprocket
4	D717952374	2	Driveshaft key

Please check Table of Contents for use of this assembly

D717952339
Conveyor chain kit

Item	Part Number	Quantity	Description
1	4812200009	104	Lock pin
2	D717061501	4	Chain
3	D717061502	52	Conveyor crossbar

Please check Table of Contents for use of this assembly

D717952346
Conveyor guide kit

Item	Part Number	Quantity	Description
1	D717060001	1	Middle chain support
2	D717060004	2	Outer chain support
3	D717060013	1	Guide plate, right
4	D717060018	1	Guide plate, left
5	D717060020	1	Guide plate, middle
6	D717800519	2	Screw, 5/8"
7	D717800729	14	Screw, 1/2"
8	D717801072	4	Narrow washer, 0.75"
9	D717801079	6	Narrow washer, 0.625"
10	D717801086	14	Flat washer, 0.5"
11	D717801632	4	Hex head screw, 3/4"
12	D717801667	4	Hex head screw, 5/8"

Please check Table of Contents for use of this assembly

D717952353
Wear plate kit

Item	Part Number	Quantity	Description
1	D717060005	1	Floor, front left
2	D717060007	1	Floor, front right
3	D717060009	1	Floor, rear left
4	D717060011	1	Floor, rear right
5	D717061005	2	Conveyor drive cover
6	D717800834	8	Lock nut, 3/8"
7	D717801044	16	Narrow washer, 0.38"
8	D717801653	8	Hex head screw, 3/8"

PARTS DYNAPAC SERVICE

D717952360
Conveyor sprocket kit

Item	Part Number	Quantity	Description
1	D717060504	4	Bearing, shaft
2	D717060515	4	Sprocket
3	D717061002	2	Housing, end bearing
4	D717061003	2	Bearing, conveyor drive middle
5	D717061004	2	Bearing, conveyor drive end
6	D717061022	2	Key, 2.375"
7	D717061023	2	Key, 3.125"
8	D717061024	2	Spacer, outer conv sprocket
9	D717061025	2	Cap, shaft end
10	D717061026	1	Housing, bearing
11	D717061028	2	Snap ring
12	D717061030	2	Sprocket & hub
13	D717061033	2	Sprocket & hub
14	D717801303	2	Screw, 1/2"
15	D717802101	4	Set screw, 3/8"
16	D717802416	4	Screw, 3/8"

Please check Table of Contents for use of this assembly

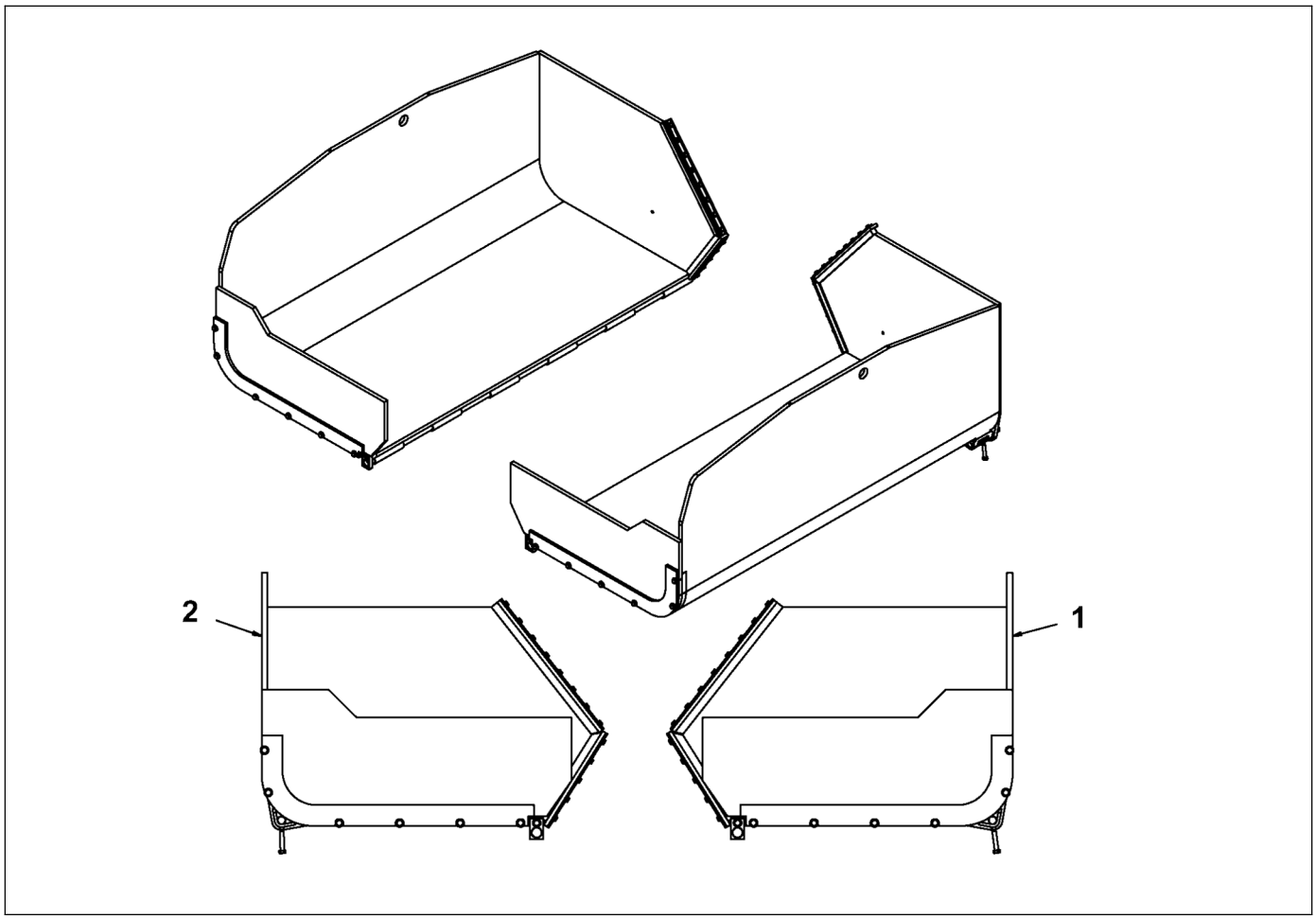

D717070000
Hopper

Item	Part Number	Quantity	Description
1	D717070500	1	Hopper assembly, left side, 10 ft.
2	D717071000	1	Hopper assembly, right side, 10 ft.
	D717952325	1	Hopper skirt kit

Please check Table of Contents for use of this assembly

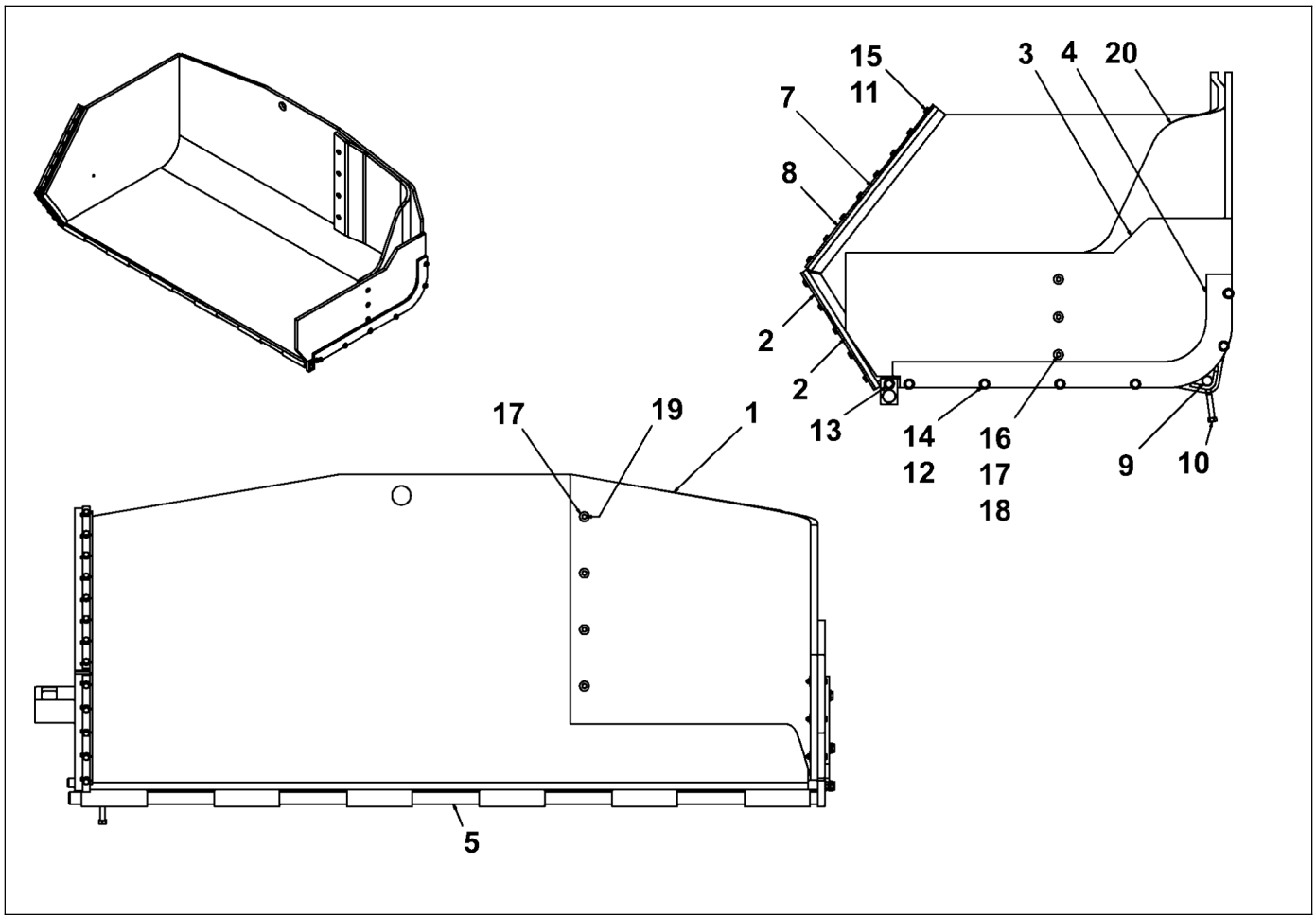

D717070500
Hopper assembly, left side, 10 ft.

Item	Part Number	Quantity	Description
1	D717070501	1	Hopper, left
2	4812200303	1	Wiper backing plate, short
3	4812220717	1	Skirt, hopper sides
4	D717070503	1	Plate, clamp
5	D717070509	1	Hopper pivot pin
6	4812200304	1	Wiper, short
7	4812200255	1	Wiper, long
8	4812200254	1	Wiper backing plate, long
9	D717070518	1	Pin
10	D717801219	1	Screw, 1/2"
11	D717801044	12	Narrow washer, 0.38"
12	D717801086	7	Flat washer, 0.5"
13	D717800729	1	Screw, 1/2"
14	D717800715	6	Screw, 1/2"
15	D717800596	12	Screw, 3/8"
16	D717801611	3	Screw, 1/4"
17	D717801716	10	Washer, 1/4"
18	D717801849	3	Hex nut, 1/4"

Please check Table of Contents for use of this assembly

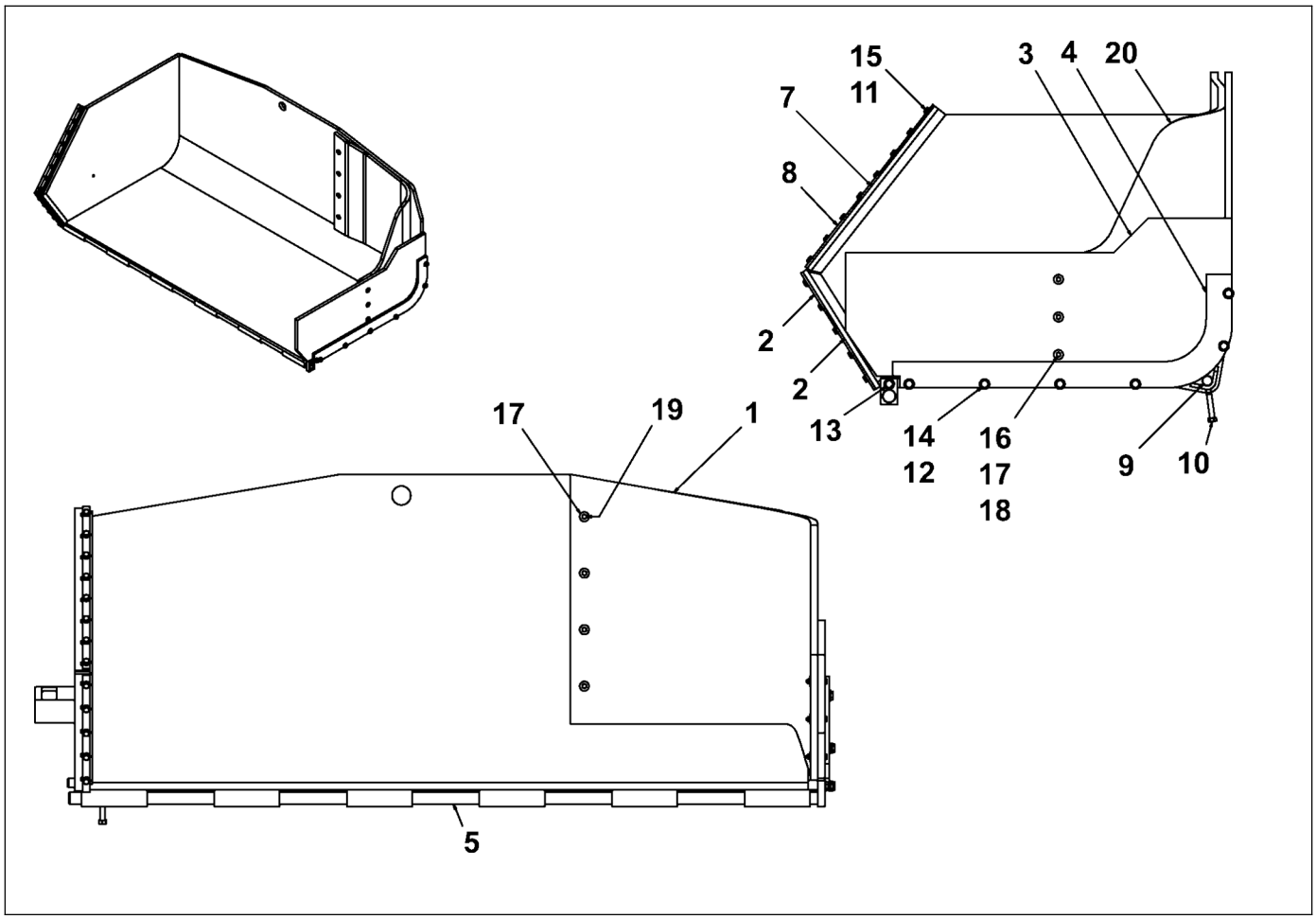

D717070500
Hopper assembly, left side, 10 ft.

Item	Part Number	Quantity	Description
19	D717800673	4	Screw, 1/4"
20	4812221566	1	Hopper skirt

Please check Table of Contents for use of this assembly

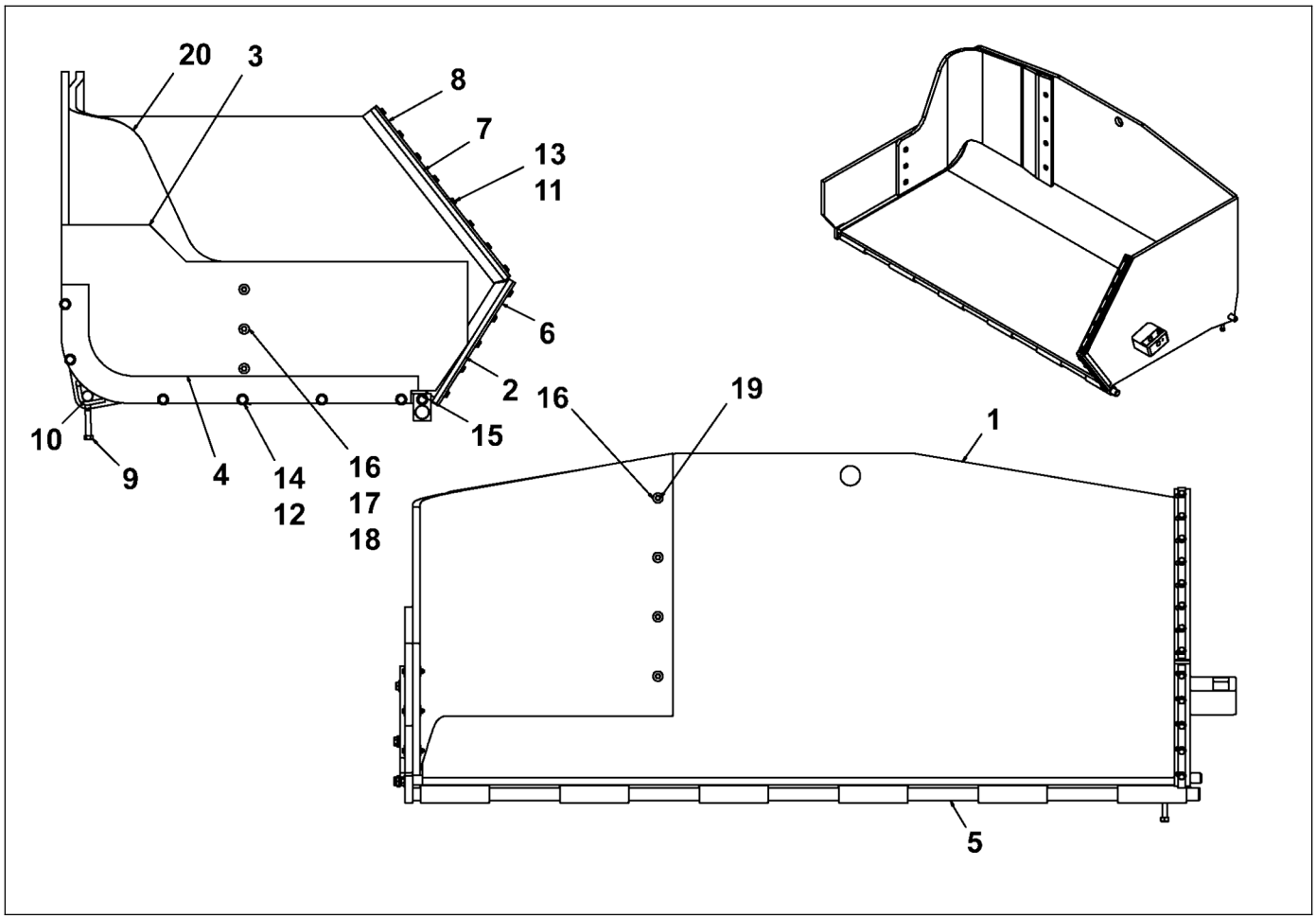

D717071000
Hopper assembly, right side, 10 ft.

Item	Part Number	Quantity	Description
1	D717071001	1	Right side hopper
2	4812200304	1	Wiper, short
3	4812220717	1	Skirt, hopper sides
4	D717070503	1	Plate, clamp
5	D717070509	1	Hopper pivot pin
6	4812200303	1	Wiper backing plate, short
7	4812200255	1	Wiper, long
8	4812200254	1	Wiper backing plate, long
9	D717801219	1	Screw, 1/2"
10	D717070518	1	Pin
11	D717801044	12	Narrow washer, 0.38"
12	D717801086	7	Flat washer, 0.5"
13	D717800596	12	Screw, 3/8"
14	D717800715	6	Screw, 1/2"
15	D717800729	1	Screw, 1/2"
16	D717801716	10	Washer, 1/4"
17	D717801611	3	Screw, 1/4"
18	D717801849	3	Hex nut, 1/4"

Please check Table of Contents for use of this assembly

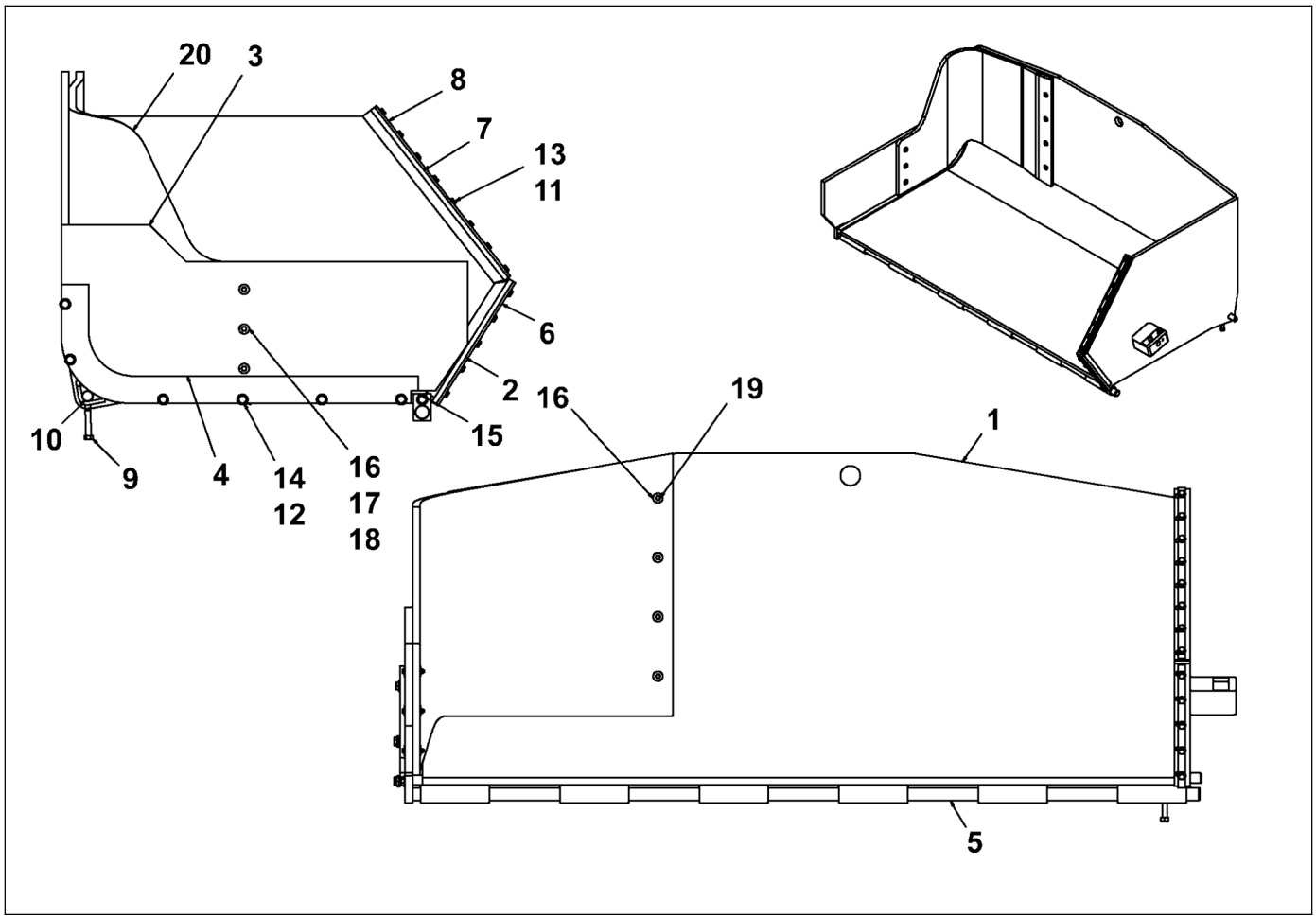

D717071000
Hopper assembly, right side, 10 ft.

Item	Part Number	Quantity	Description
19	D717800673	4	Screw, 1/4"
20	4812221567	1	Hopper skirt

Please check Table of Contents for use of this assembly

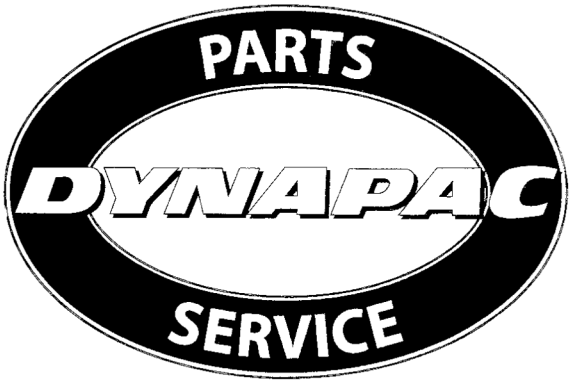

D717952325
Hopper skirt kit

Item	Part Number	Quantity	Description
1	4812220716	1	Front hopper skirt
2	4812220717	2	Skirt, hopper sides
3	D717070507	2	Wiper, long
4	D717070508	2	Wiper

Please check Table of Contents for use of this assembly

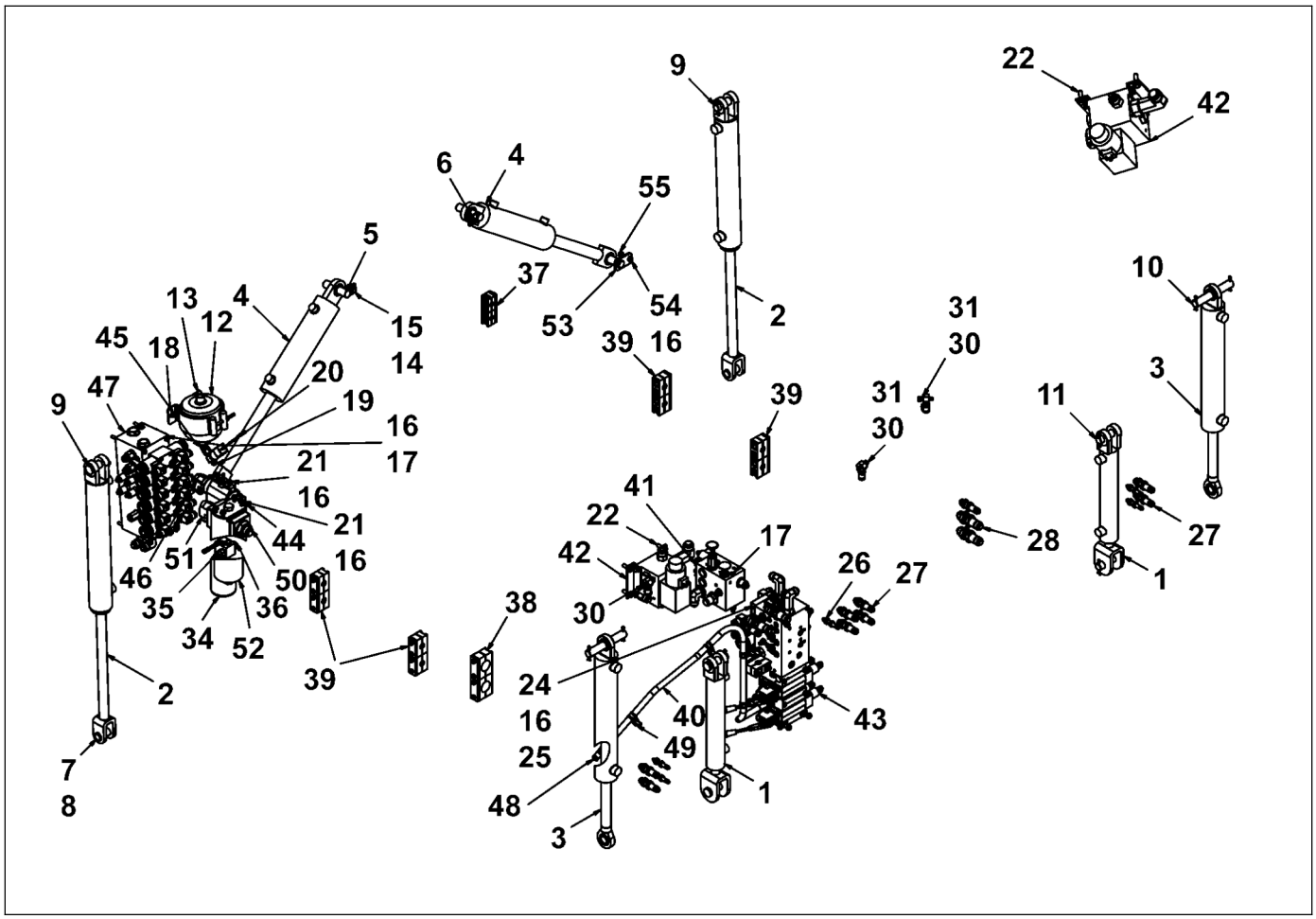

D717090000
Hydraulic assembly

Item	Part Number	Quantity	Description
1	D717091001	2	Auger lift cylinder
2	D717091503	2	Cylinder, screed level, front
3	D717091502	2	Cylinder, screed lift, rear
4	D717091501	2	Cylinder, hopper pivot
5	D717093501	2	Pin, cylinder pivot
6	D717093502	2	Tab, pin lock
7	D717091504	2	Pin, screed lift cylinder
8	D717801191	4	Retaining ring
9	D717091505	2	Pin, screed front lift cylinder
10	D717091509	2	Pin, screed rear lift cylinder
11	D717091510	4	Pin, cylinder
12	D717090502	1	Accumulator, Track tension circuit
13	D717093506	1	Clamp, accumulator mounting
14	D717801044	16	Narrow washer, 0.38"
15	D717800610	6	Screw, 3/8"
16	D717801051	16	Narrow washer, 0.313"
17	D717800533	6	Screw, 5/16"
18	D717800568	2	Screw, 5/16"

Please check Table of Contents for use of this assembly

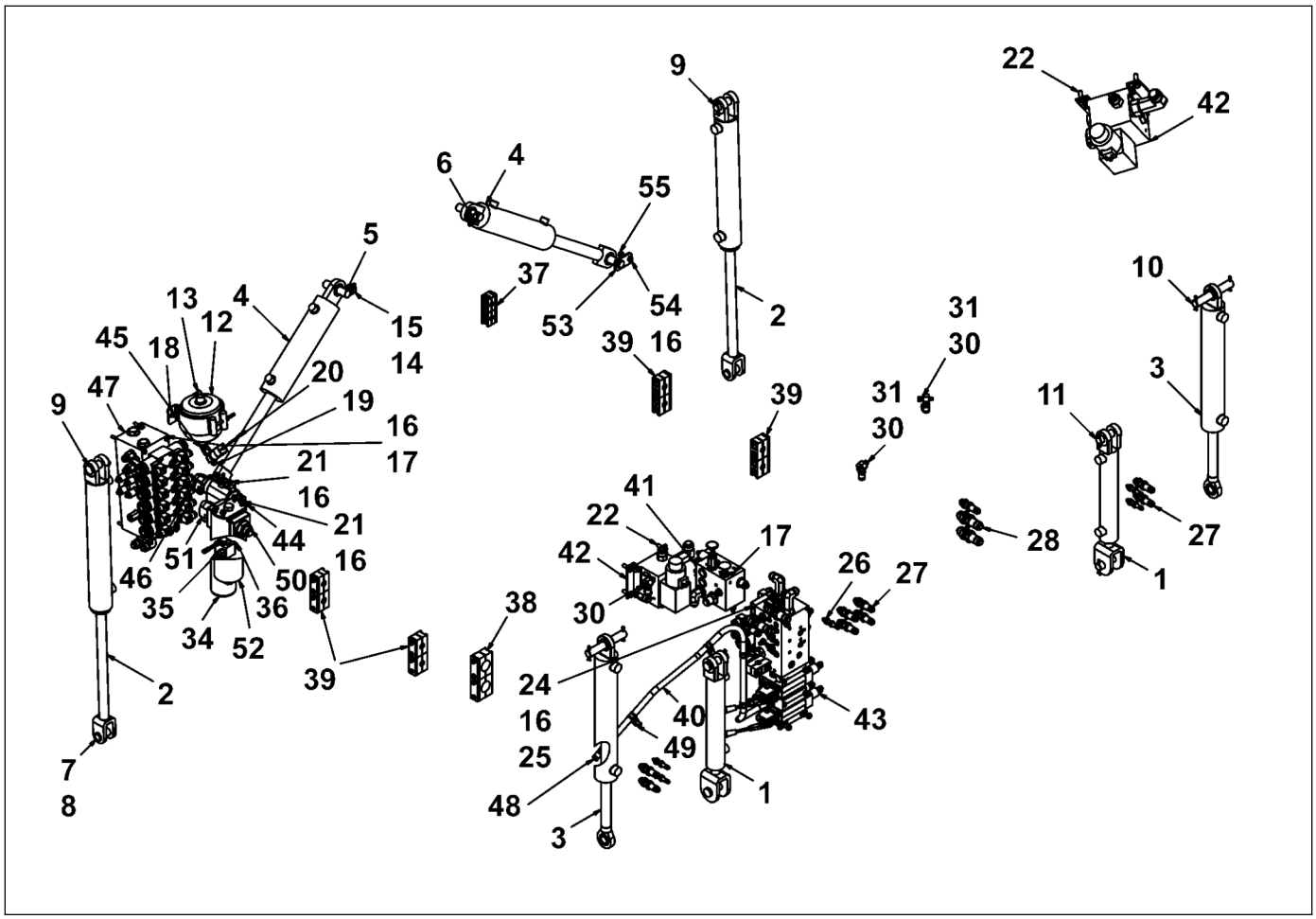

D717090000
Hydraulic assembly

Item	Part Number	Quantity	Description
19	D717800386	1	Tee, 08-08-04
20	D717101509	1	Pressure switch
21	D717800554	2	Screw, 5/16"
22	D717800603	4	Screw, 3/8"
24	D717801597	2	Screw, 5/16"
25	D717800827	4	Lock nut, 5/16"
26	D717091026	5	Bulkhead fitting, 04
27	D717091027	10	Bulkhead fitting, 08
28	D717091028	4	Bulkhead fitting, 12
29	D717144000	1	Schematic, hyd system, 10' tracked paver
30	D717090504	4	Test Port
31	D717090526	3	Run tee, 04-04-04-04
32	D717090001	1	Hose kit, hydraulic, 10' tracked paver
33	D717090505	1	Test port, male
34	D717091002	1	Pressure filter
35	4812220181	1	Check valve
36	4812220182	1	Ball valve
37	4812220714	4	Rail mount clamp

Please check Table of Contents for use of this assembly

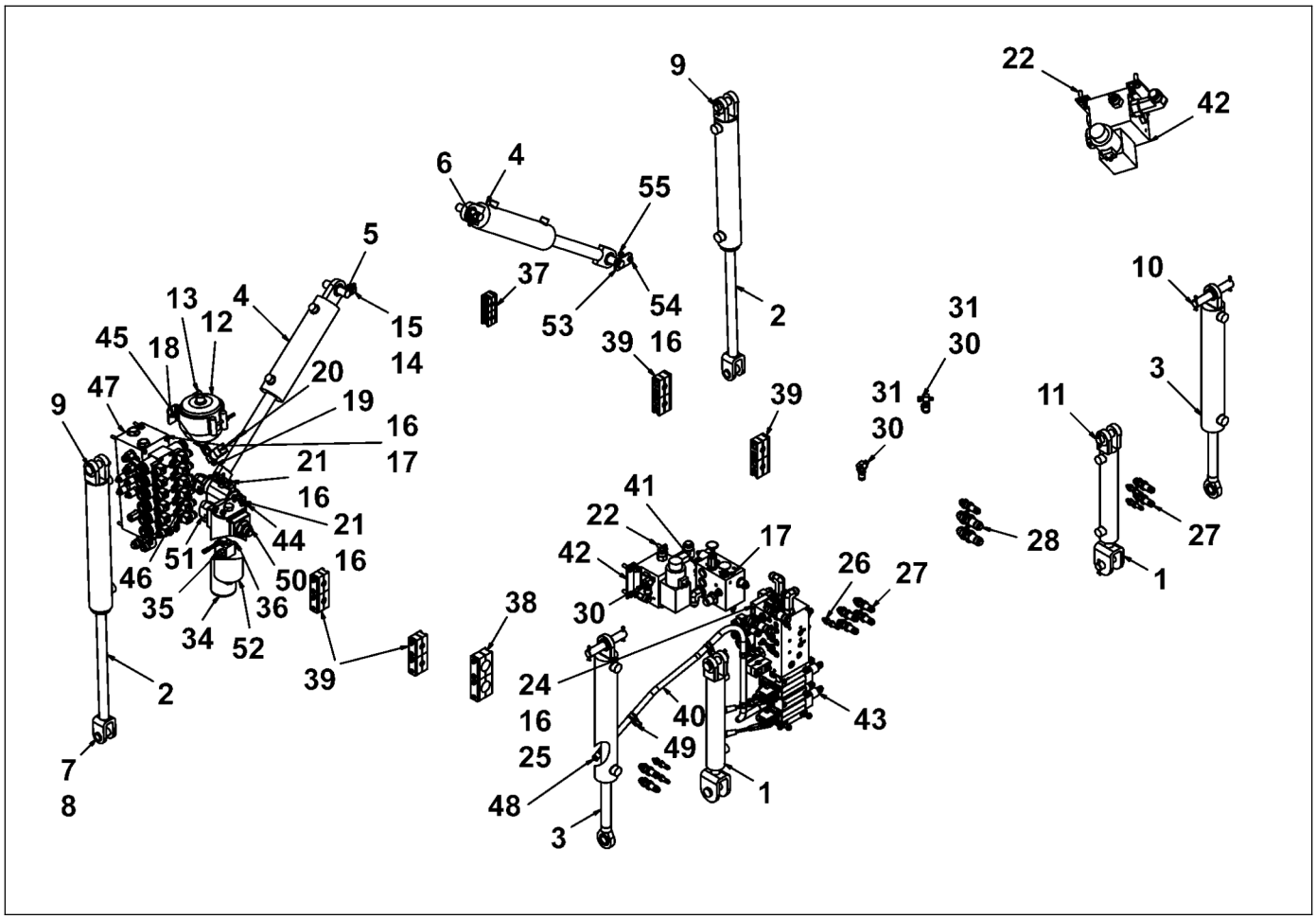

D717090000
Hydraulic assembly

Item	Part Number	Quantity	Description
38	D717090530	2	Rail mount clamp
39	D717090531	9	Rail mount clamp
40	4812221048	1	Hose assembly
41	4812221108	1	HIC assembly
42	4812221106	1	Vibration valve
43	4812221105	1	Rear work function
44	D717800001	1	Adapter, 20-12
45	D717800379	1	Elbow, 08-08
46	4812221096	1	Elbow, 20-12-90
47	4812221104	1	Front work function
48	4812221507	1	Test port
49	4812221656	4	P clamp
50	4812220889	1	Elbow, 16-20
51	4812220890	1	Elbow, 16-20
52	4812220748	1	Filter, high-pressure
53	4812222647	2	Pin weldment
54	4812222657	2	Screw, 5/16"
55	D717801023	2	Hex nut, 5/16"

Please check Table of Contents for use of this assembly

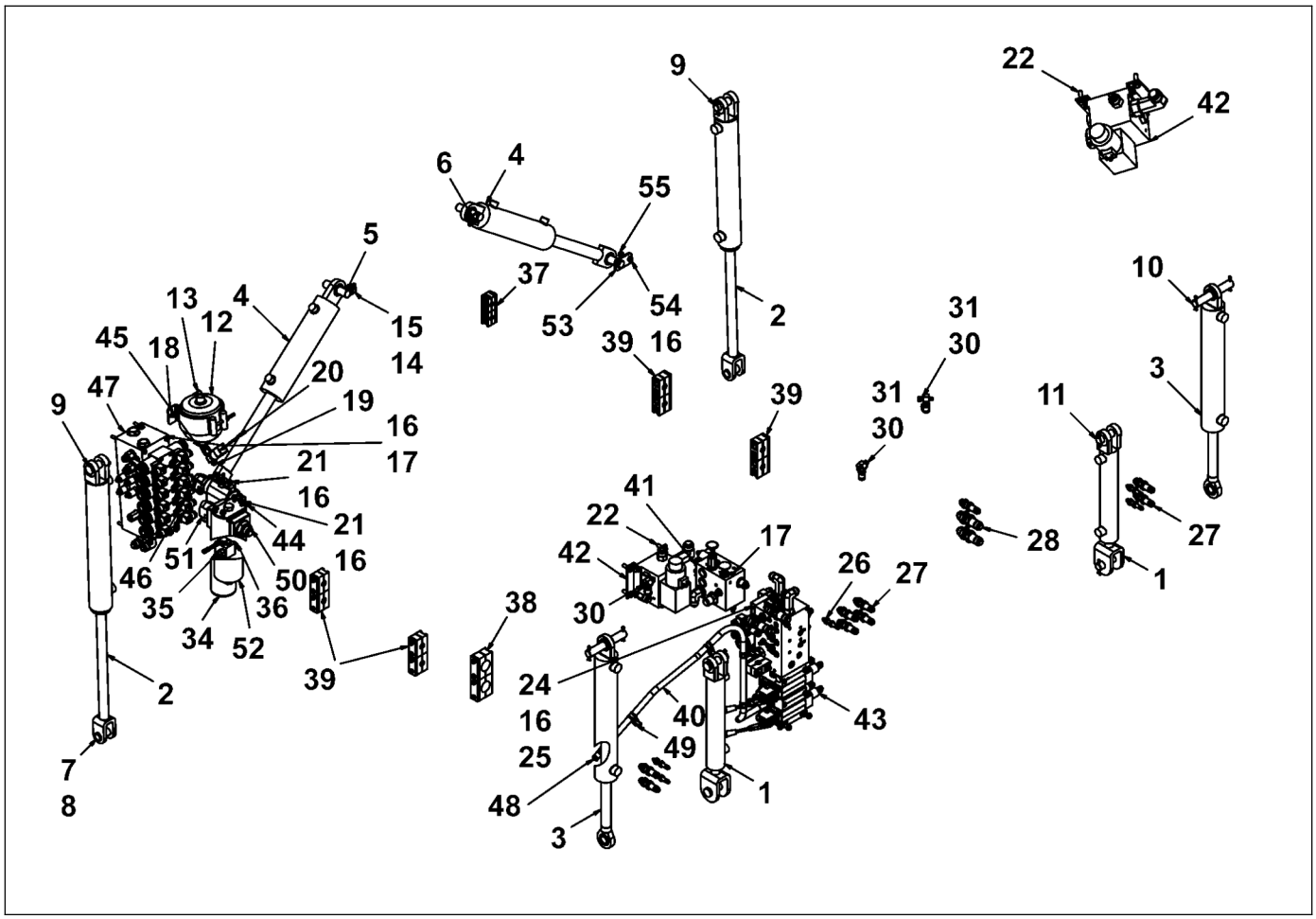

D717090000
Hydraulic assembly

Item	Part Number	Quantity	Description
56	4812200323	6	Screw, 3/8"

Please check Table of Contents for use of this assembly

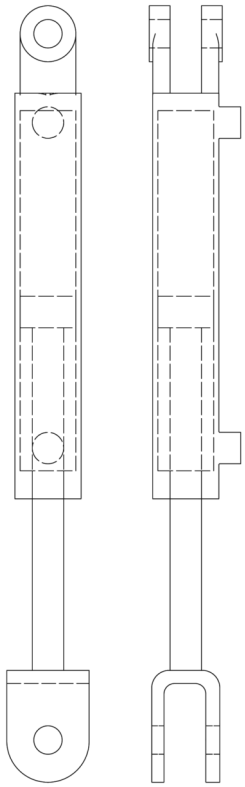

D717091001
Auger lift cylinder

Item	Part Number	Quantity	Description
1	D717950743	1	Kit, gland seal
2	D717950771	1	Kit, piston seal

Please check Table of Contents for use of this assembly

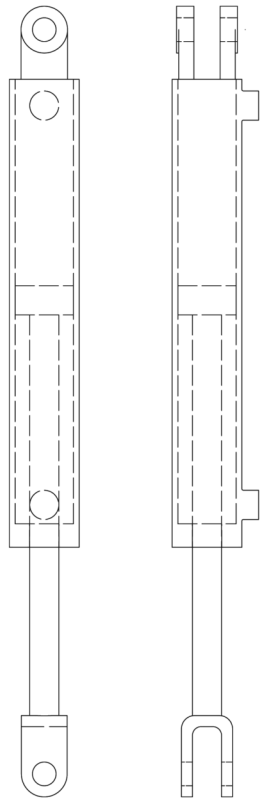

D717091503
Cylinder, screed level, front

Item	Part Number	Quantity	Description
1	D717950757	1	Kit, gland seal
2	D717950764	1	Kit, piston seal

Please check Table of Contents for use of this assembly

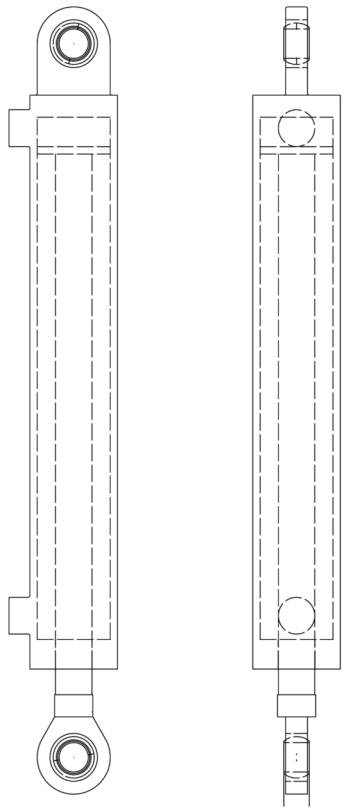

D717091502
Cylinder, screed lift, rear

Item	Part Number	Quantity	Description
1	D717950757	1	Kit, gland seal
2	D717950764	1	Kit, piston seal

Please check Table of Contents for use of this assembly

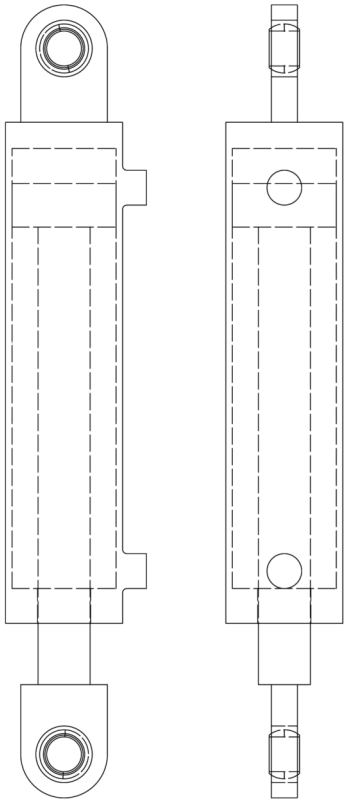

D717091501
Cylinder, hopper pivot

Item	Part Number	Quantity	Description
1	D717950750	1	Kit, gland seal
2	D717951639	1	Kit, piston seal

Please check Table of Contents for use of this assembly

D717090001
Hose kit, hydraulic, 10' tracked paver

Item	Part Number	Quantity	Description
1	4812200063	1	Hose kit, auger
2	4812200065	1	Hose kit, conveyor
3	4812200067	1	Hose kit, lube
4	4812200068	1	Hose kit, miscellaneous
5	4812200069	1	Hose kit, propel
6	4812200071	1	Hose kit, vibration
7	4812200072	1	Hose kit, work
8	4812200073	1	Hose kit, work
9	4812200092	1	Hose kit, generator system
10	4812200054	0	Adapter, 16-16
11	4812200074	0	Adapter, 12-12
12	4812200075	0	Elbow, 12-16
13	4812200079	0	Elbow, 10-12
14	4812200080	0	Adapter, 10-10
15	4812200081	0	Elbow, 06-04
16	4812200082	0	Elbow, 16-12
17	4812200084	0	Adapter, 10-18
18	4812200101	0	Adapter, 10-18

Please check Table of Contents for use of this assembly

D717090001
Hose kit, hydraulic, 10' tracked paver

Item	Part Number	Quantity	Description
19	4812200113	0	Elbow, 08-08
20	4812200114	0	Adapter, 04-12
21	4812200127	0	Run tee, 08-08-08
22	4812200128	0	Adapter, 06-06
23	4812200129	0	Adapter, 06-04

4812200063
Hose kit, auger

Item	Part Number	Quantity	Description
10	D717920520	1	Hose assembly, #93, 12
11	D717920527	1	Hose assembly, #94, 12
25	D717920135	1	Hose assembly, #25, 12
42	D717920240	1	Hose assembly, #42, 12
43	D717920235	1	Hose assembly, #43, 12
45	D717920254	1	Hose assembly, #45, 16
46	D717920261	1	Hose assembly, #46, 16
56	D717920317	2	Hose assembly, #56, #57, 16
57	D717920317	1	Hose assembly, #56, #57, 16
58	D717920324	1	Hose assembly, #58, 08
59	D717920331	1	Hose assembly, #59, 08
91	D717920513	3	Hose assembly, #91, #92, 12
92	D717920513	1	Hose assembly, #91, #92, 12
93	D717920513	1	Hose assembly, #91, #92, 12
94	D717920513	1	Hose assembly, #91, #92, 12
109	D717920597	1	Hose assembly, #109, 06
110	D717920604	1	Hose assembly, #110, 06

Please check Table of Contents for use of this assembly

4812200065
Hose kit, conveyor

Item	Part Number	Quantity	Description
1	D717920303	1	Hose assembly, #54, 10
2	D717920310	1	Hose assembly, #55, 10
3	D717920352	2	Hose assembly, #63, #64, 10
4	D717920366	1	Hose assembly, #66, 12
5	D717920590	1	Hose assembly, #104, 32
6	D717920625	1	Hose assembly, #113, 04
7	D717920653	1	Hose assembly, #125, 16
8	D717920233	1	Hose assembly, #43, 12
9	D717920338	2	Hose assembly, #60, #61, 12
10	D717920373	1	Hose assembly, #67, 12
11	D717920583	1	Hose assembly, #103, 16

4812200067
Hose kit, lube

Item	Part Number	Quantity	Description
1	D717920660	1	Hose assembly, #126, 04
2	D717920667	1	Hose assembly, #127, 04
3	D717920674	1	Hose assembly, #128, 04
4	D717920681	1	Hose assembly, #129, 04
5	D717920688	1	Hose assembly, #130, 04
6	D717920695	1	Hose assembly, #131, 04

Please check Table of Contents for use of this assembly

4812200068
Hose kit, miscellaneous

Item	Part Number	Quantity	Description
105	D717085055	1	Hose assembly, #105, 32
106	D717085034	1	Hose assembly, #95, 08
124	D717920646	1	Hose assembly, #124, 20
132	4812200299	1	Hose assembly, #132, 10
133	4812200298	1	Hose assembly, #133, 12
134	4812200297	1	Hose assembly, #134, 10
135	D717083542	1	Fuel tank hose, left
136	D717083543	1	Fuel tank hose, right
137	4812221068	1	Grease line, 4
138	4812221374	1	Grease line
139	D717083543	1	Fuel tank hose, right
140	4812221559	1	Air vent hose
141	4812221048	1	Hose assembly

Please check Table of Contents for use of this assembly

4812200069
Hose kit, propel

Item	Part Number	Quantity	Description
11	D717920058	1	Hose assembly, #11, 12
13	D717920072	1	Hose assembly, #13, 12
18	D717920093	1	Hose assembly, #19, 04
19	D717920093	2	Hose assembly, #19, 04
20	D717920100	1	Hose assembly, #20, 16
21	D717920107	1	Hose assembly, #21, 16
22	D717920114	1	Hose assembly, #22, 12
23	D717920121	1	Hose assembly, #23, 04
24	D717920128	1	Hose assembly, #24, 04
26	D717920142	1	Hose assembly, #26, 04
27	D717920149	1	Hose assembly, #27, 04
44	D717920247	1	Hose assembly, #44, 12
68	D717920380	1	Hose assembly, #68, 12
82	D717920457	1	Hose assembly, #82, 16
83	D717920464	1	Hose assembly, #83, 16
84	D717920471	1	Hose assembly, #84, 16
85	D717920478	1	Hose assembly, #85, 16
86	D717920485	1	Hose assembly, #86, 16

Please check Table of Contents for use of this assembly

4812200069
Hose kit, propel

Item	Part Number	Quantity	Description
90	D717920506	1	Hose assembly, #90, 16
99	D717920555	1	Hose assembly, #99, 12
101	D717920569	1	Hose assembly, #101, 16
102	D717920576	1	Hose assembly, #102, 16
112	D717920611	2	Hose assembly, #111, #112, 04
116	D717920639	1	Hose assembly, #116, 06

Please check Table of Contents for use of this assembly

4812200071
Hose kit, vibration

Item	Part Number	Quantity	Description
1	D717920065	1	Hose assembly, #12, 12
2	D717920429	1	Hose assembly, #75, 16
3	D717920450	2	Hose assembly, #81, 08
4	D717920632	2	Hose assembly, #114, #115, 08

Please check Table of Contents for use of this assembly

PARTS DYNAPAC SERVICE

4812200072
Hose kit, work

Item	Part Number	Quantity	Description
1	D717920002	1	Hose assembly, #1, 08
5	D717920030	1	Hose assembly, #5, 08
6	D717920037	1	Hose assembly, #6, 08
32	D717920170	1	Hose assembly, #32, 04
33	D717920177	1	Hose assembly, #33, 04
34	D717920184	1	Hose assembly, #34, 04
35	D717920191	1	Hose assembly, #35, 04
37	4812200300	1	Hose assembly, #37, 08
38	4812200301	1	Hose assembly, #38, 06
39	D717920219	1	Hose assembly, #39, 04
40	4812200302	1	Hose assembly, #40, 06
69	D717920387	1	Hose assembly, #69, 08
70	D717920394	1	Hose assembly, #70, 08

Please check Table of Contents for use of this assembly

4812200073
Hose kit, work

Item	Part Number	Quantity	Description
1	D717920009	1	Hose assembly, #2, 12
2	D717920016	1	Hose assembly, #3, 12
3	D717920023	1	Hose assembly, #4, 04
4	D717920079	1	Hose assembly, #14, 08
5	D717920086	1	Hose assembly, #15, 08
6	D717920079	1	Hose assembly, #14, 08
7	D717920086	1	Hose assembly, #15, 08
8	D717920156	2	Hose assembly, #28, 04
9	D717920163	2	Hose assembly, #29, 04
10	D717920198	1	Hose assembly, #36, 08
11	D717920268	1	Hose assembly, #47, 08
12	D717920275	1	Hose assembly, #48, 08
13	D717920282	1	Hose assembly, #49, 08
14	D717920289	2	Hose assembly, #50, 04
15	D717920296	2	Hose assembly, #52, 04
16	D717920359	1	Hose assembly, #65, 16
17	D717920492	1	Hose assembly, #87, 04
18	D717920499	2	Hose assembly, #89, 08

Please check Table of Contents for use of this assembly

4812200073
Hose kit, work

Item	Part Number	Quantity	Description
19	D717920534	2	Hose assembly, #95, #96, 06
20	D717920541	1	Hose assembly, #97, 04

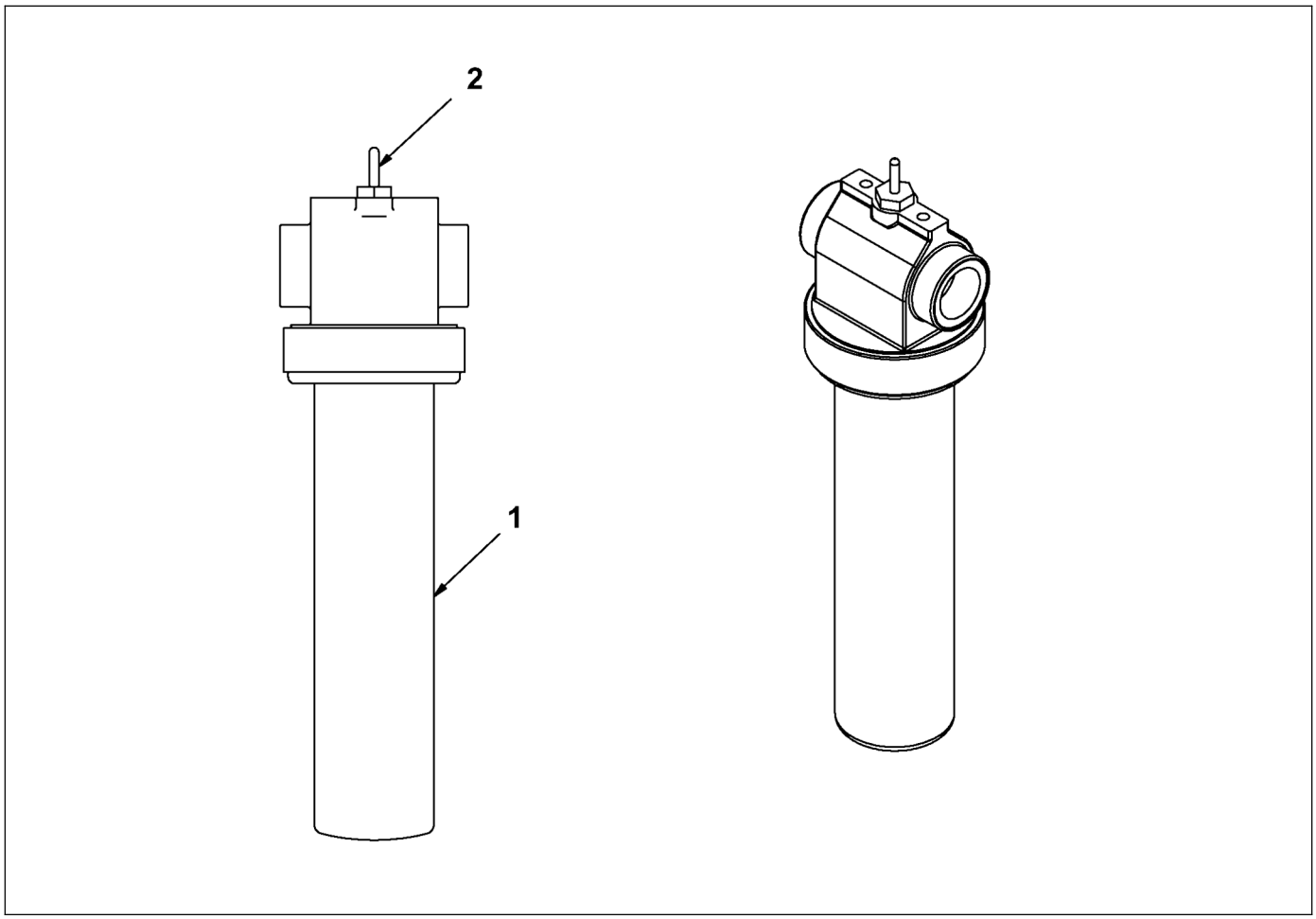

D717091002
Pressure filter

Item	Part Number	Quantity	Description
1	D717950477	1	Replacement filter
2	D717950729	1	Indicator
	D717950736	1	Kit, seal

Please check Table of Contents for use of this assembly

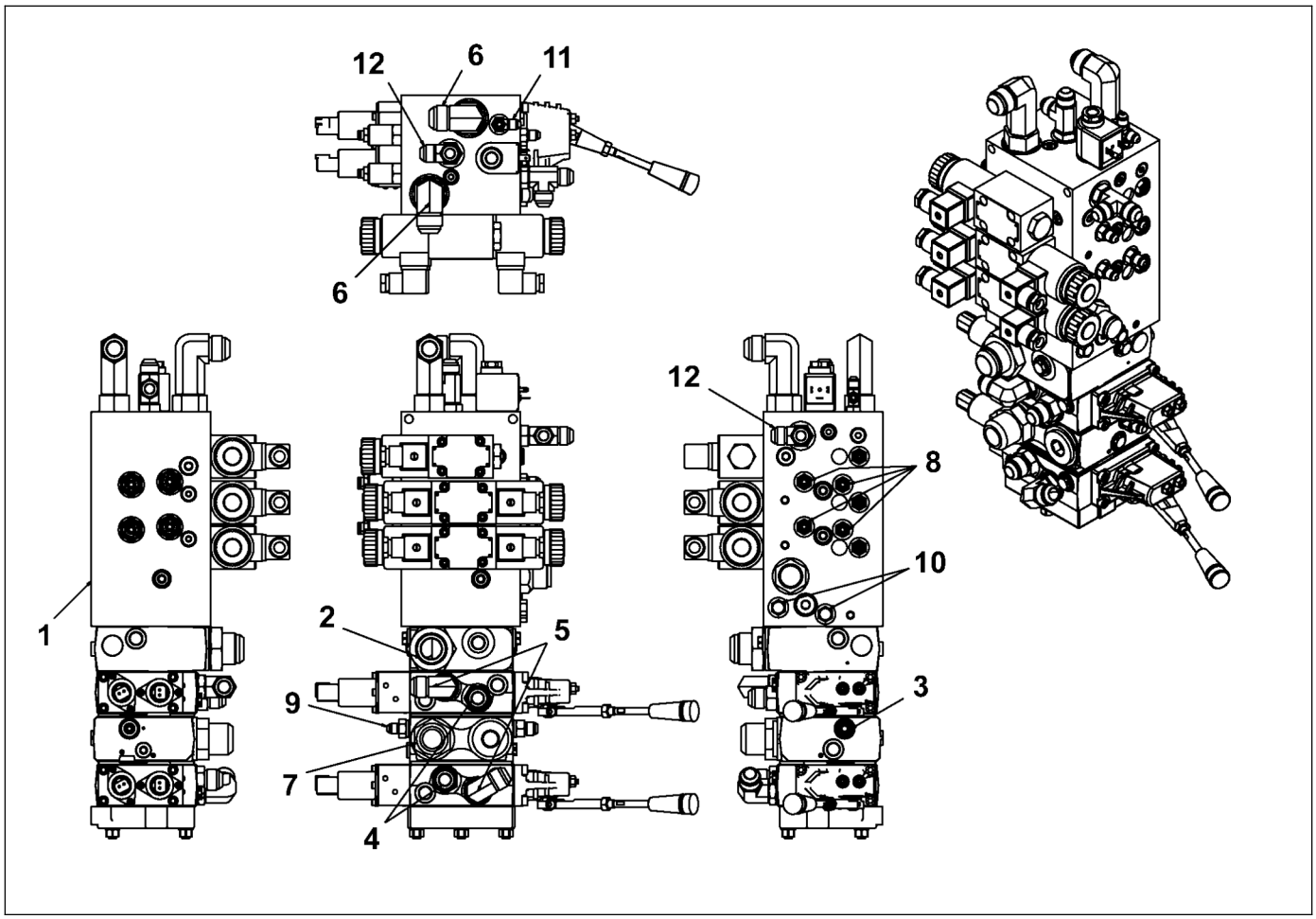

4812221105
Rear work function

Item	Part Number	Quantity	Description
1	D717091507	1	Valve bank, rear work function
2	4812200054	2	Adapter, 16-16
3	D717800323	1	Adapter, 06-06
4	D717800057	2	Adapter, 10-10
5	D717800064	2	Elbow, 10-10
6	D717800092	2	Elbow, 12-12, extra long
7	D717800218	1	Adapter, 16-16
8	D717800246	4	Adapter, 04-04
9	D717800281	1	Adapter, 06-04
10	D717802276	2	External plug, 04
11	D717800260	1	Run tee, 04-04-04
12	4812221095	2	Run tee, 08-08-08

Please check Table of Contents for use of this assembly

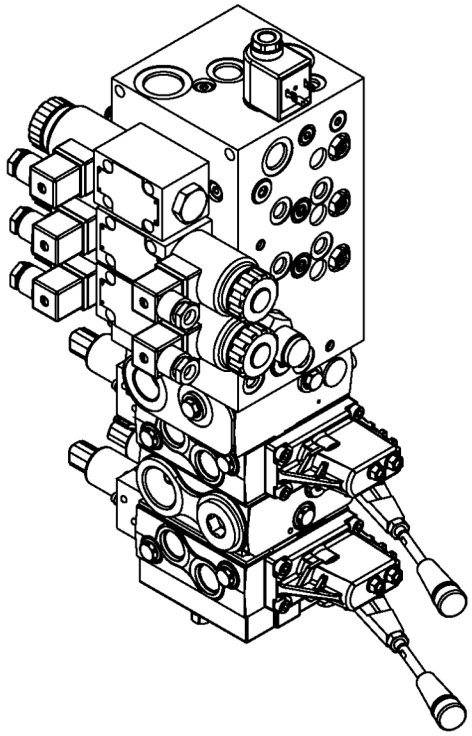

D717091507
Valve bank, rear work function

Item	Part Number	Quantity	Description
1	D717953690	2	PVHC
2	D717953711	1	HIC, rear valve
3	D717953739	2	Anti-cav valve
4	D717953746	1	PVSI
5	D717953753	3	Shock valve
6	D717953760	2	PVM
7	D717953767	2	PVB
8	D717953774	1	PVSPM
9	D717953781	1	Tie rod assembly
10	D717953788	2	Spool
11	D717952857	1	Plug, 1
12	D717954194	1	Pilot
13	D717951226	1	Cartridge
14	D717951233	1	Valve, DCV cartridge
15	D717951240	1	Kit, seal
16	D717951247	1	Coil

Please check Table of Contents for use of this assembly

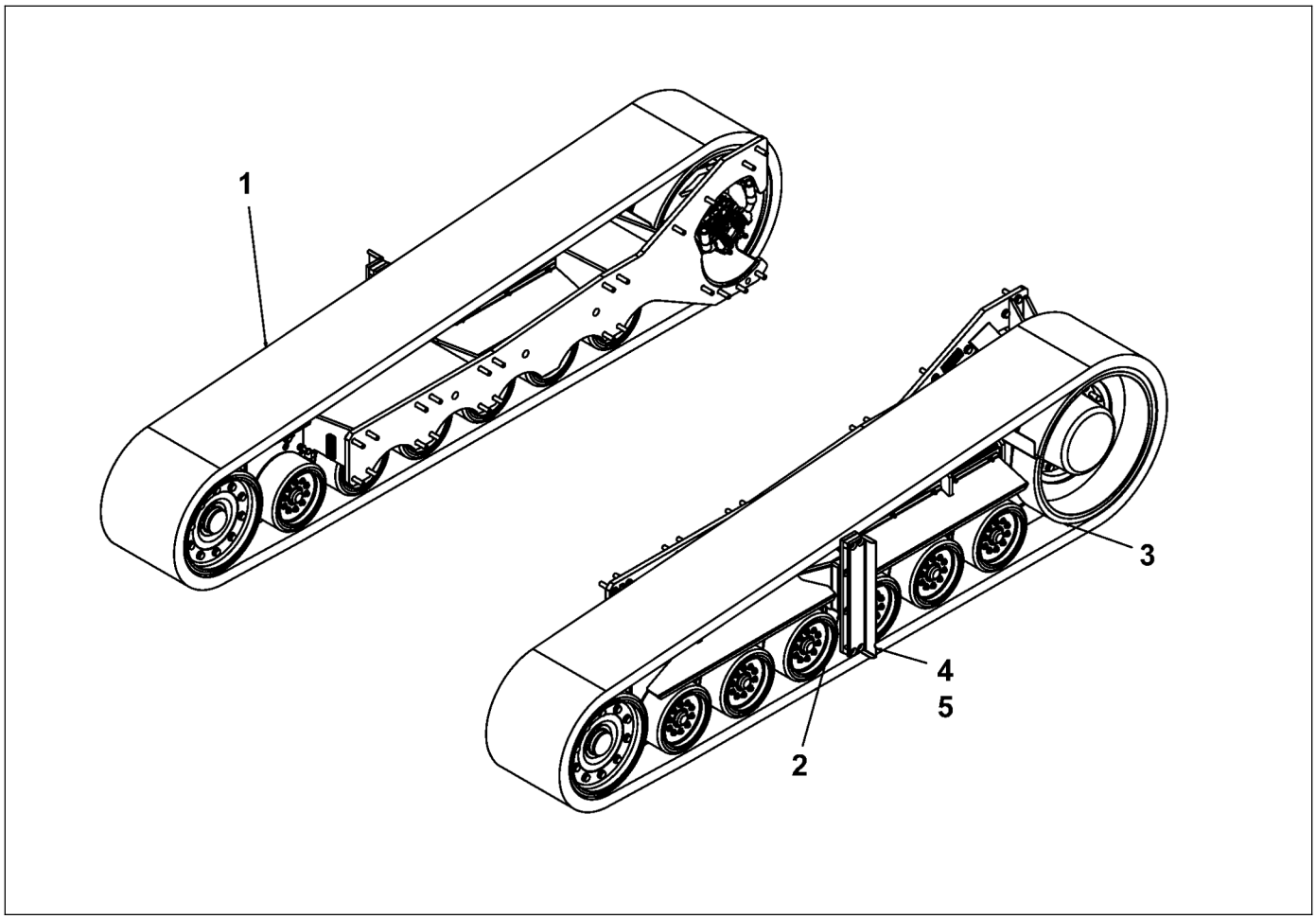

D717170000
Track

Item	Part Number	Quantity	Description
1	D717171000	1	Track right
2	D717172001	1	Screed leveling guide
3	D717170500	1	Track left
4	D717172008	2	Plate, tow point gage
5	D717410015	2	Decal, Screed leveling ruler

Please check Table of Contents for use of this assembly

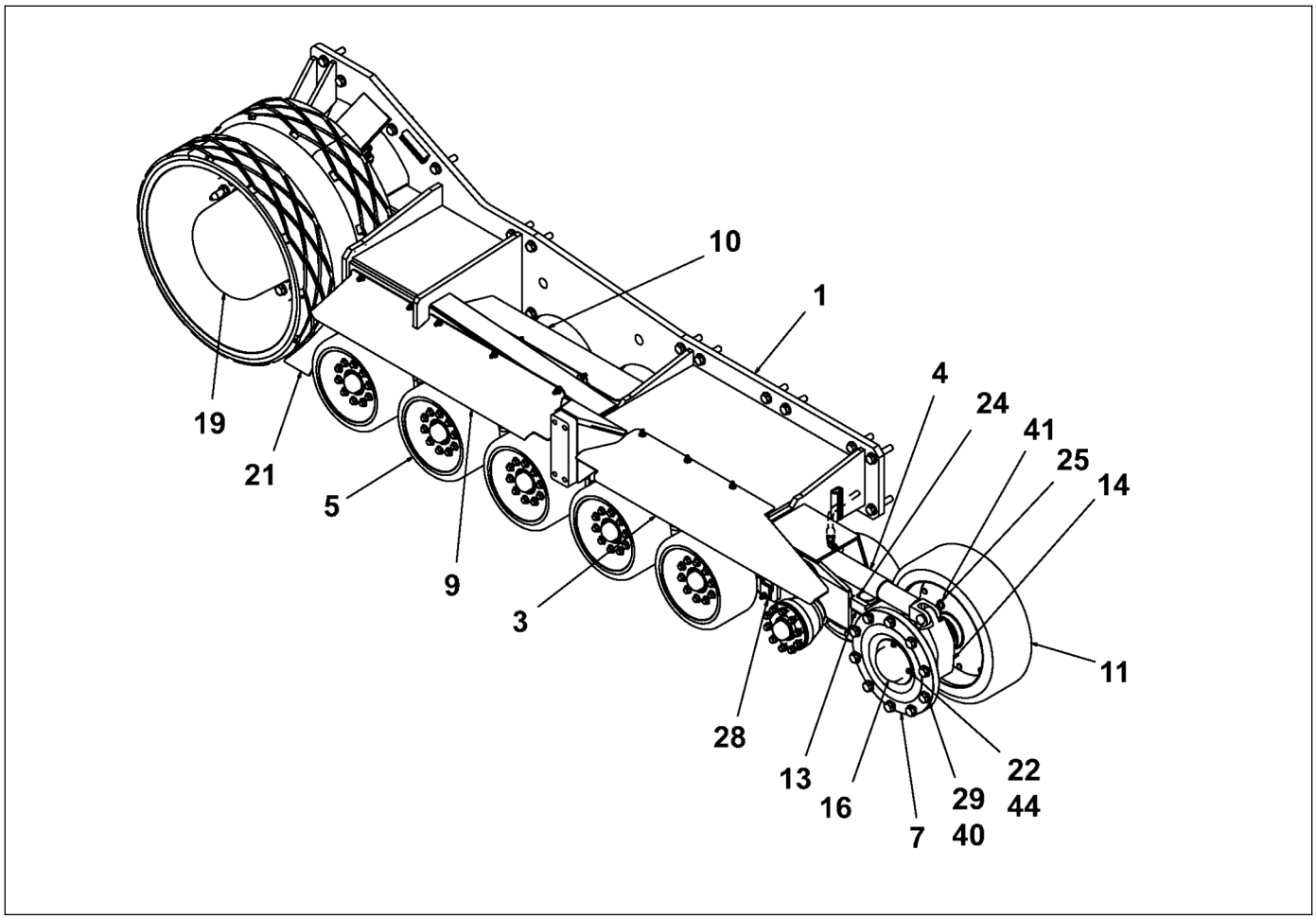

D717171000
Track right

Item	Part Number	Quantity	Description
1	D717171001	1	Track frame
2	D717171004	0	Rubber track, right
3	D717171003	1	Track shield
4	D717170639	1	Track tension cylinder
5	D717170544	3	Bogie assembly
6	D717170570	1	Bushing, tensioner
7	D717170622	2	Assembly, hub, idler wheel
8	D717170582	2	Washer
9	D717171005	1	Track shield, middle
10	D717171006	1	Track shield, back
11	D717170557	2	Bonded idler wheel
12	D717170583	1	Bushing
13	D717170588	1	Idler frame
14	D717170579	1	Tensioner
15	D717170602	2	Castle nut, 1 1/4"
16	D717170625	2	Dust cover, bolt-on
17	D717801226	3	Cotter pin, 3/16"
18	D717171014	1	Motor track assy

Please check Table of Contents for use of this assembly

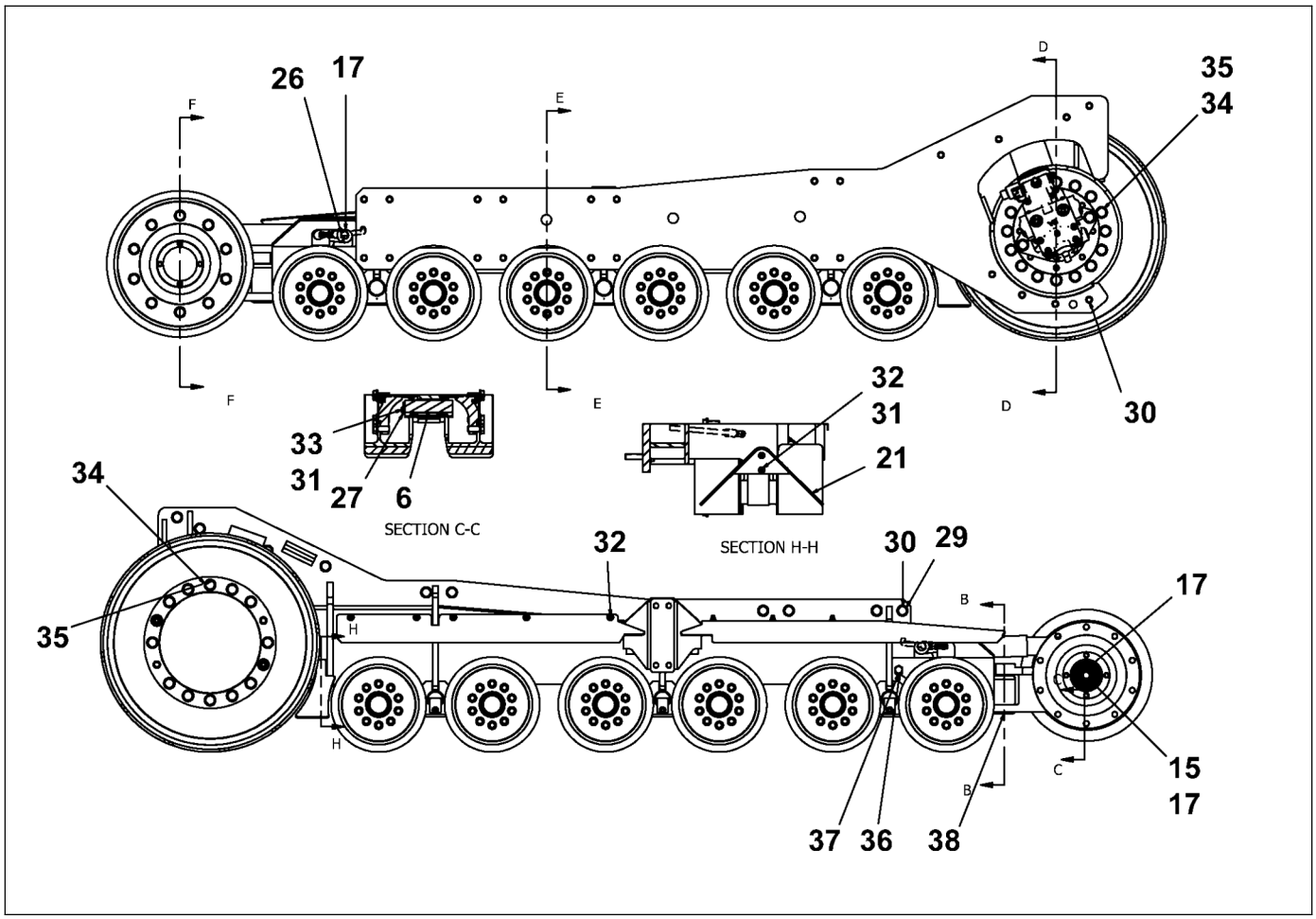

D717171000
Track right

Item	Part Number	Quantity	Description
19	D717170600	1	Gearbox, track drive
20	D717171010	2	Bonded drive wheel
21	D717170636	1	Dirt guard
22	D717801331	8	Screw, 5/16"
23	D717170577	1	Retainer, tension assembly
24	D717170576	1	Tension pin
25	D717170601	1	Hair pin
26	D717170581	1	Pin, track tensioner cylinder anchor
27	D717170609	1	Track tensioner pin
28	D717170584	3	Bogie pin
29	D717801072	44	Narrow washer, 0.75"
30	D717170618	24	Tap bolt, 3/4"
31	D717801044	17	Narrow washer, 0.38"
32	D717800834	16	Lock nut, 3/8"
33	D717800617	1	Screw, 3/8"
34	D717801149	34	Washer, 20mm
35	D717800449	32	Screw, M20
36	D717170614	2	Jam nut, 5/8"

Please check Table of Contents for use of this assembly

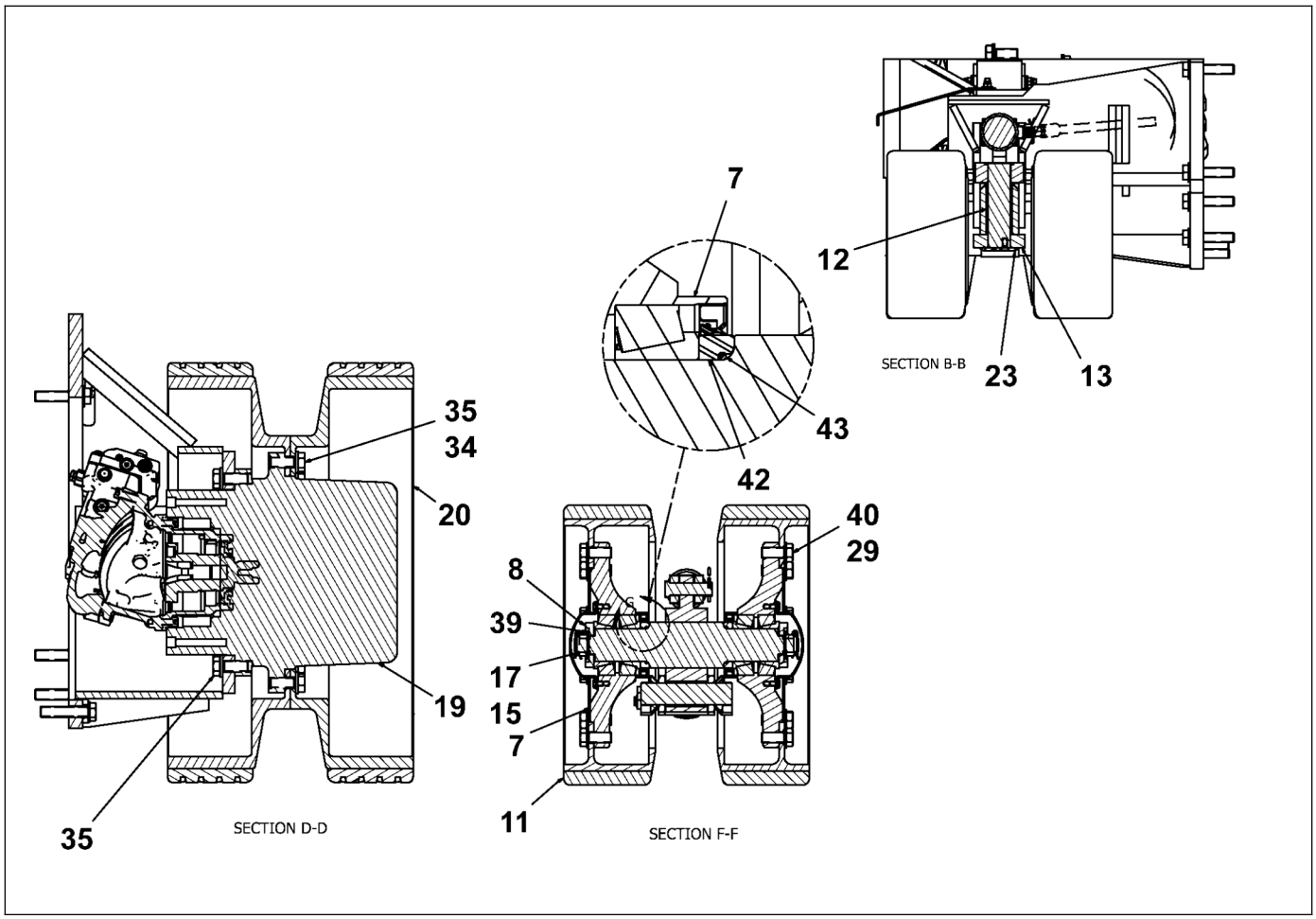

D717171000
Track right

Item	Part Number	Quantity	Description
37	D717170615	2	Screw, 5/8
38	D717800925	2	Screw, 3/8"
39	D717801065	2	Washer, 1"
40	D717801037	20	Screw, 3/4"
41	D717170616	1	Tensioning cylinder pin
42	D717170627	2	Spacer
43	D717170630	2	O-ring
44	D717801051	8	Narrow washer, 0.313"

Please check Table of Contents for use of this assembly

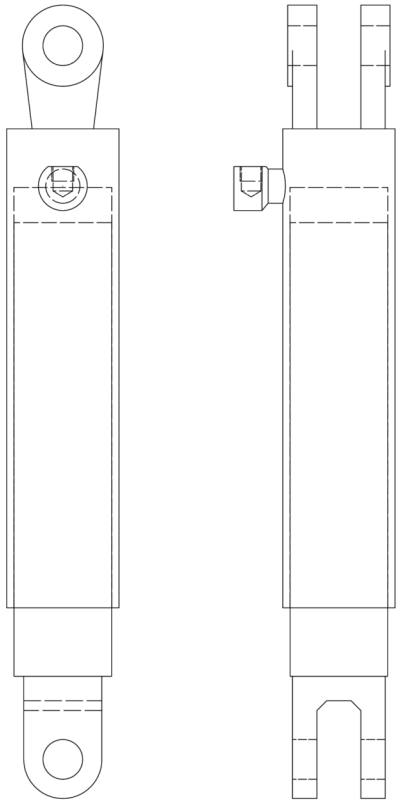

D717170639
Track tension cylinder

Item	Part Number	Quantity	Description
1	D717950757	1	Kit, gland seal
2	D717950764	1	Kit, piston seal

Please check Table of Contents for use of this assembly

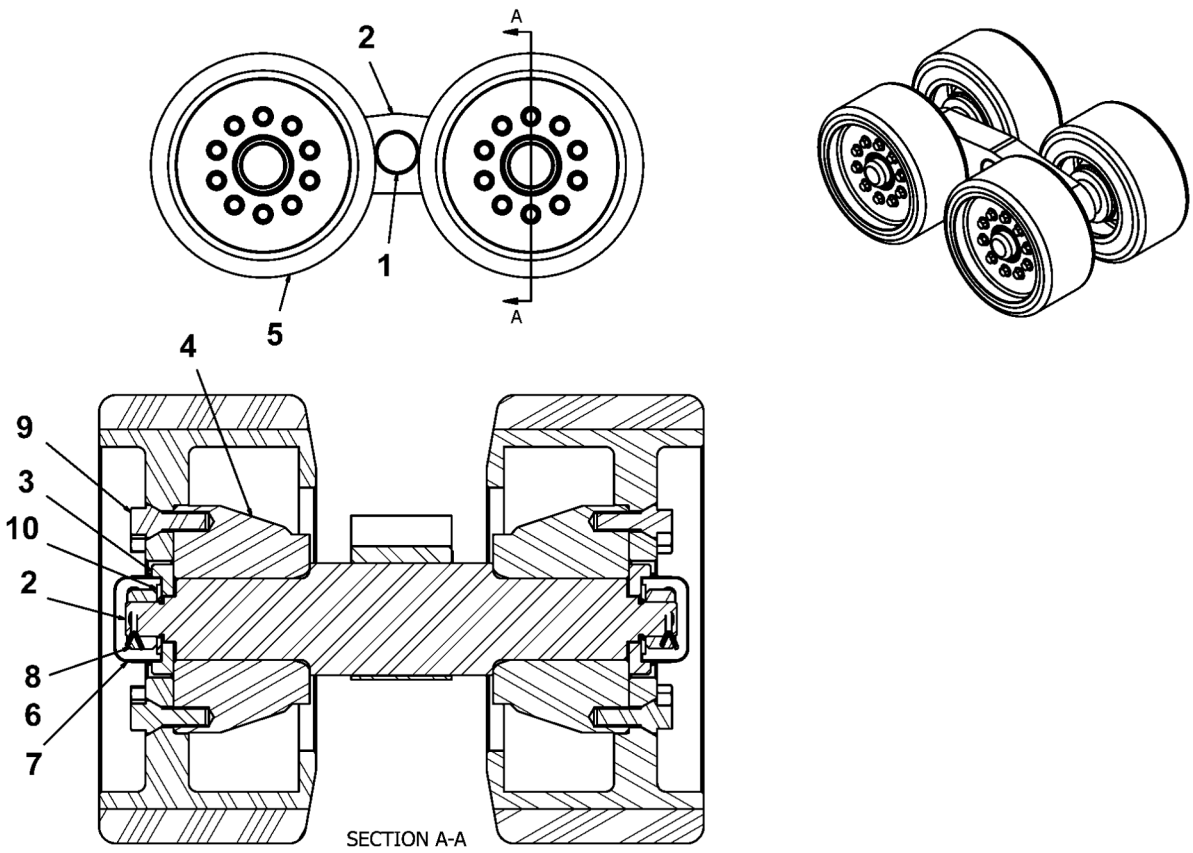

D717170544
Bogie assembly

Item	Part Number	Quantity	Description
1	D717170547	1	Bushing, bogie
2	D717170545	1	Bogie, spindle
3	D717170582	4	Washer
4	D717170550	4	Hub, bogie wheel
5	D717170558	4	Bonded roller wheel
6	D717170602	4	Castle nut, 1 1/4"
7	D717170603	4	Dust cap
8	D717801226	4	Cotter pin, 3/16"
9	D717170626	40	Wheel lug bolt, M14
10	D717801065	4	Washer, 1"

Please check Table of Contents for use of this assembly

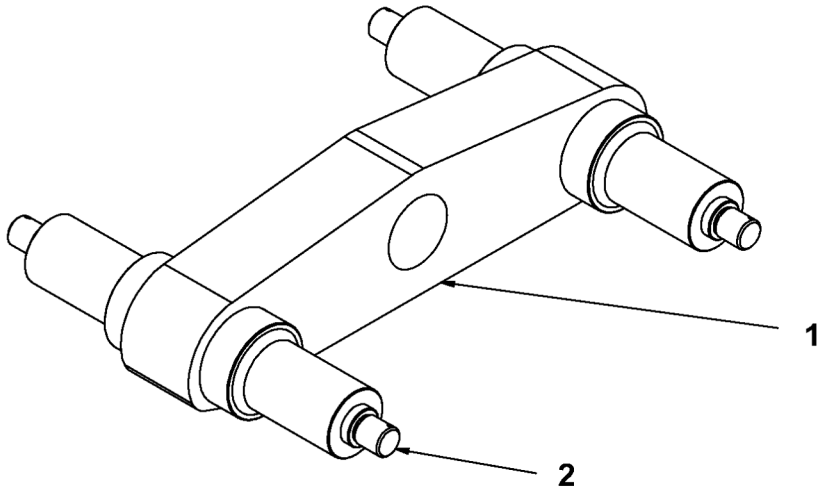

D717170545
Bogie, spindle

Item	Part Number	Quantity	Description
1	D717170546	1	Bogie spindle plate
2	D717170599	2	Bogie spindle

Please check Table of Contents for use of this assembly

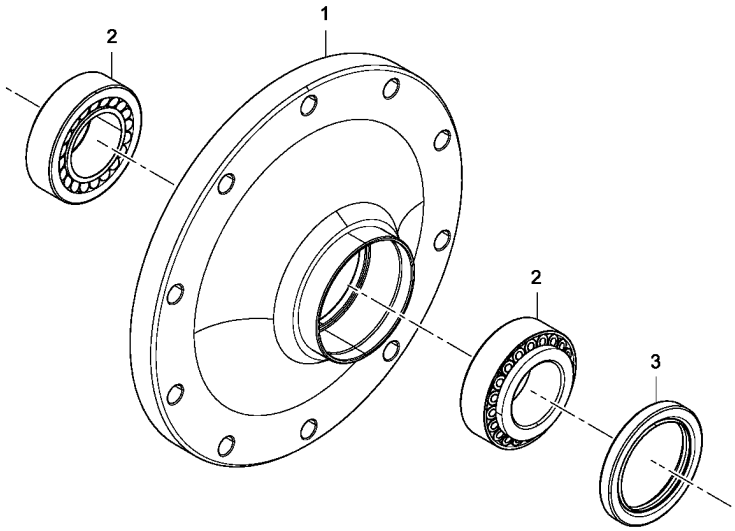

D717170622
Assembly, hub, idler wheel

Item	Part Number	Quantity	Description
1	D717170623	1	Hub, idler wheel
2	D717170629	2	Tapered roller bearing
3	D717170628	1	Seal

Please check Table of Contents for use of this assembly

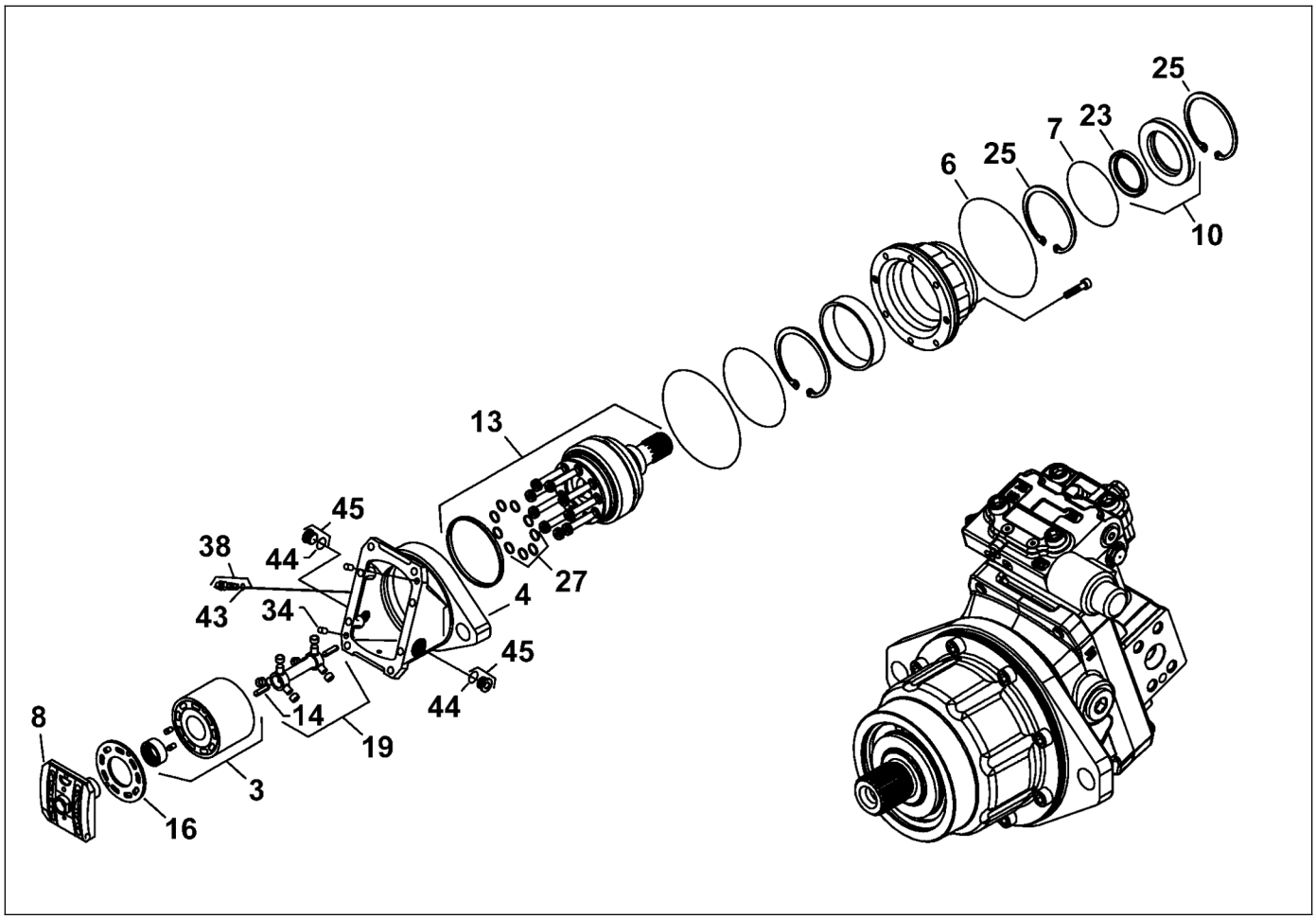

D717171014
Motor track assy

Item	Part Number	Quantity	Description
1	D717950778	1	Set screw
2	D717950785	2	Screw
3	D717950792	3	Plug
4	D717950799	1	Cylinder block
5	D717950806	1	Motor housing
6	D717950813	1	Gasket
7	D717950827	1	O-ring
8	D717950834	9	Plug
9	D717950855	1	O-ring
10	D717950862	1	Valve segment
11	D717950869	1	Screw adjusting assembly
12	D717950876	1	Seal carrier assembly
13	D717950883	1	Housing
14	D717950890	1	O-ring gasket seal
15	D717950897	1	Shaft
16	D717950904	2	Support pin
17	D717950911	2	Spring guide
18	D717950918	1	Bearing plate

Please check Table of Contents for use of this assembly

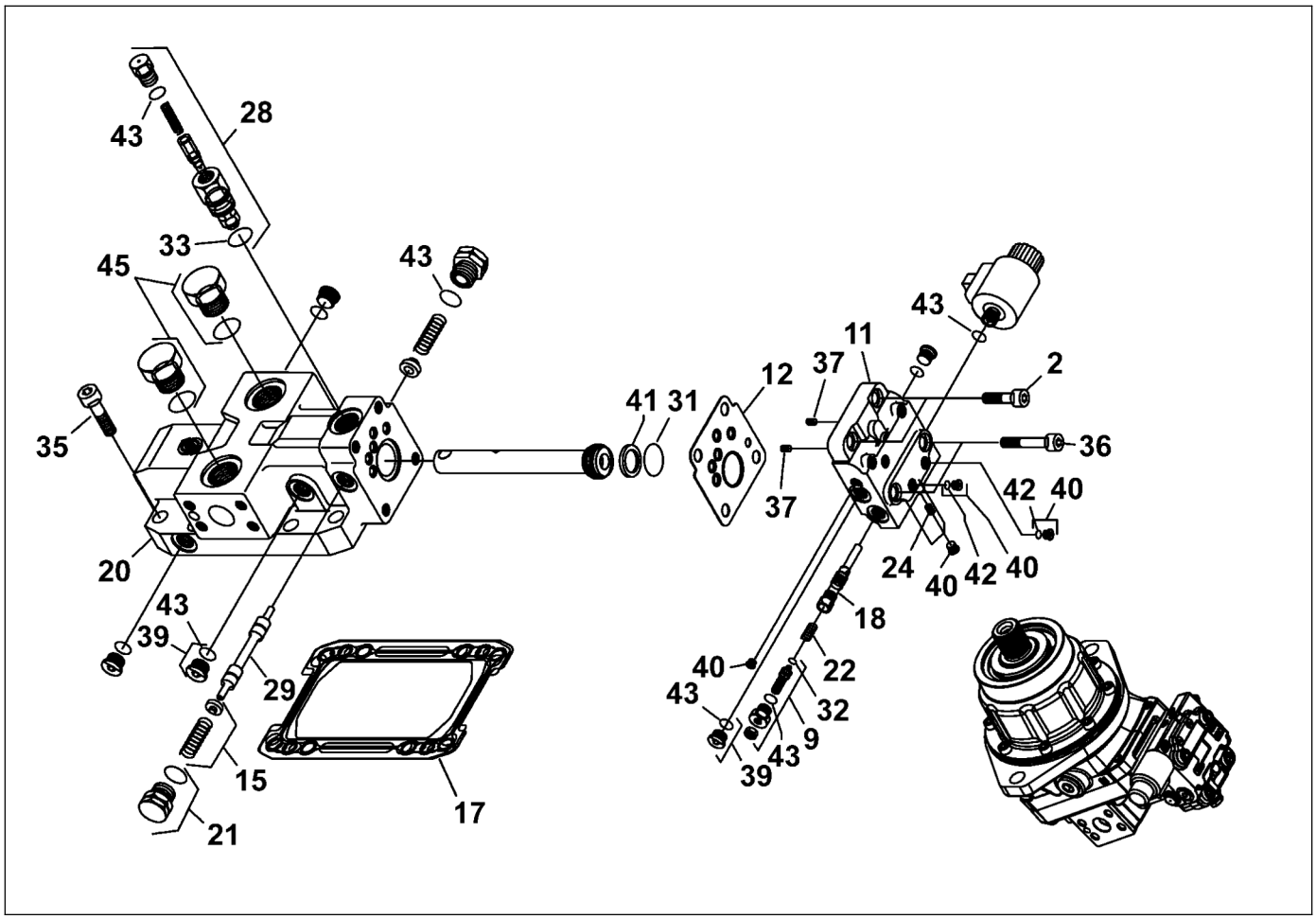

D717171014
Motor track assy

Item	Part Number	Quantity	Description
19	D717950925	1	Gasket
20	D717950932	1	Relief valve
21	D717950939	1	Synch shaft kit
22	D717950946	1	End cap
23	D717950953	2	Plug
24	D717950960	1	Spring
25	D717950967	1	Lip seal
26	D717950974	1	Ring seal
27	D717950981	1	Orifice
28	D717950988	2	Retaining ring
29	D717950995	1	Safety cap
30	D717951002	1	Piston ring kit
31	D717951009	1	Charge relief cartridge kit
32	D717951016	1	Spool
33	D717951037	1	Nut seal
34	D717951044	1	O-ring
35	D717951051	1	O-ring
36	D717951058	9	O-ring

Please check Table of Contents for use of this assembly

DYNAPAC
Part of the Atlas Copco Group

Please see previous page for drawing.

D717171014
Motor track assy

Item	Part Number	Quantity	Description
37	D717951065	9	O-ring
38	D717951072	1	O-ring
39	D717951079	4	O-ring
40	D717951086	2	Pin
41	D717951093	4	Plug
42	D717951107	8	Socket-head screw
43	D717951114	2	Screw
44	D717951121	2	Set screw
45	D717951128	1	Sensor
46	D717952927	1	Spacer
47	D717952934	1	Retaining ring
48	D717952948	1	Nut
49	D717952955	1	Servo piston assembly
50	D717953557	1	Bearing housing
51	D717953620	1	Solenoid valve
52	D717954138	8	Socket-head screw

Please check Table of Contents for use of this assembly

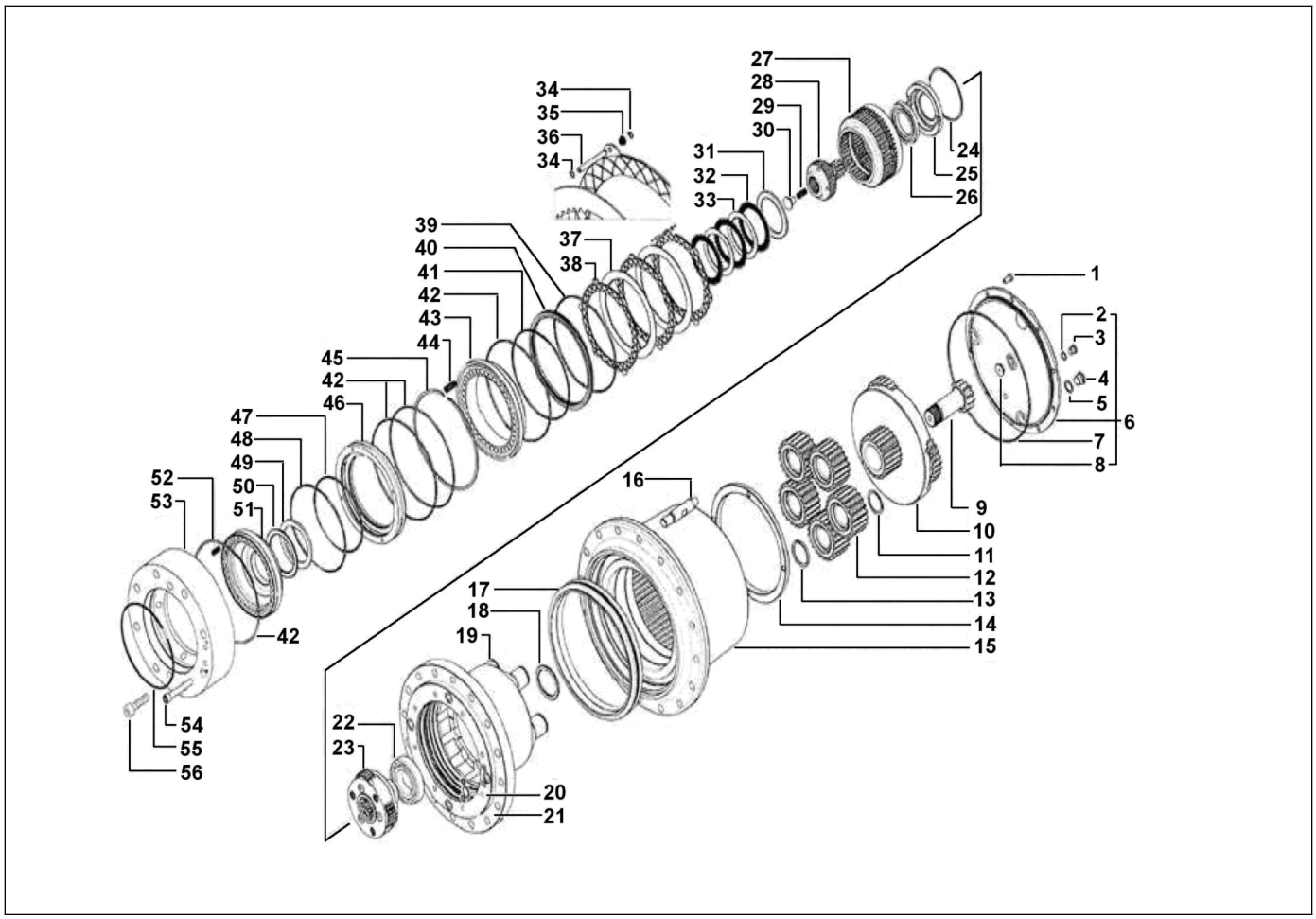

D717170600
Gearbox, track drive

Item	Part Number	Quantity	Description
1	D717951156	1	Screw
2	D717951163	1	Washer
3	D717951170	1	Plug
4	D717951177	1	Plug
5	D717951184	1	Washer
6	D717951191	1	Cover
7	D717951198	1	O-ring
8	D717951205	1	Pad
9	D717951212	1	Gear
10	D717951219	1	Reduction
11	D717951317	1	Circlip
12	D717951324	1	Planetary
13	D717951331	1	Spacer
14	D717951338	1	Nut
15	D717951345	1	Housing and bearing
16	D717951352	1	Pin
17	D717951359	1	Seal
18	D717951366	1	Ring

Please check Table of Contents for use of this assembly

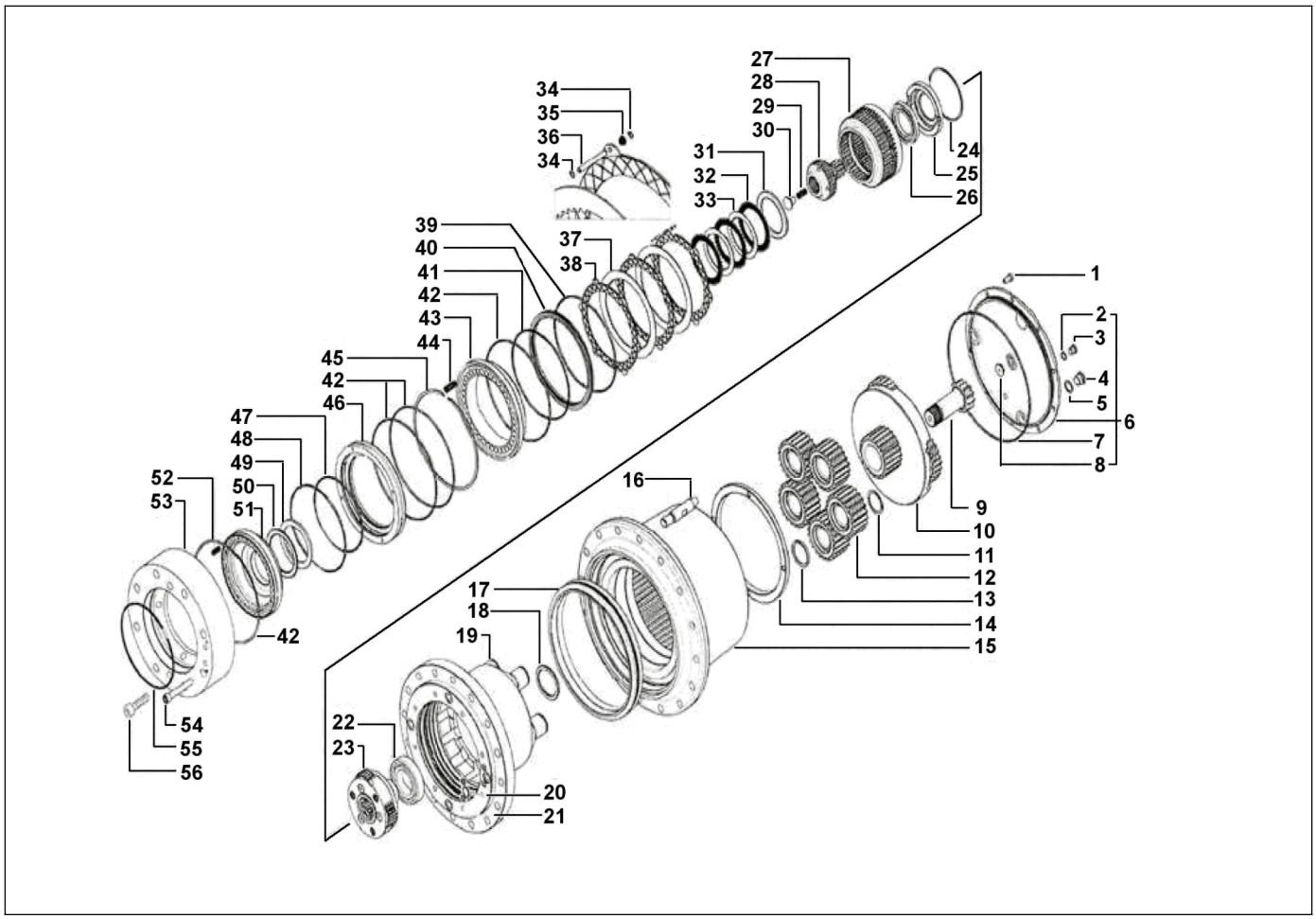

D717170600
Gearbox, track drive

Item	Part Number	Quantity	Description
19	D717951373	1	Hub
20	D717951380	1	O-ring
21	D717951387	1	O-ring
22	D717951394	1	Bearing
23	D717951401	1	Reduction
24	D717951408	1	Circlip
25	D717951415	1	Spring retaining plate
26	D717951422	1	Bearing
27	D717951429	1	Ring
28	D717951436	1	Gear
29	D717951443	1	Spring
30	D717951450	1	Disc
31	D717951457	1	Spacer
32	D717951464	1	DIsc
33	D717951471	1	Disc
34	D717951478	1	Circlip
35	D717951485	1	Spring
36	D717951492	1	Pin

Please check Table of Contents for use of this assembly

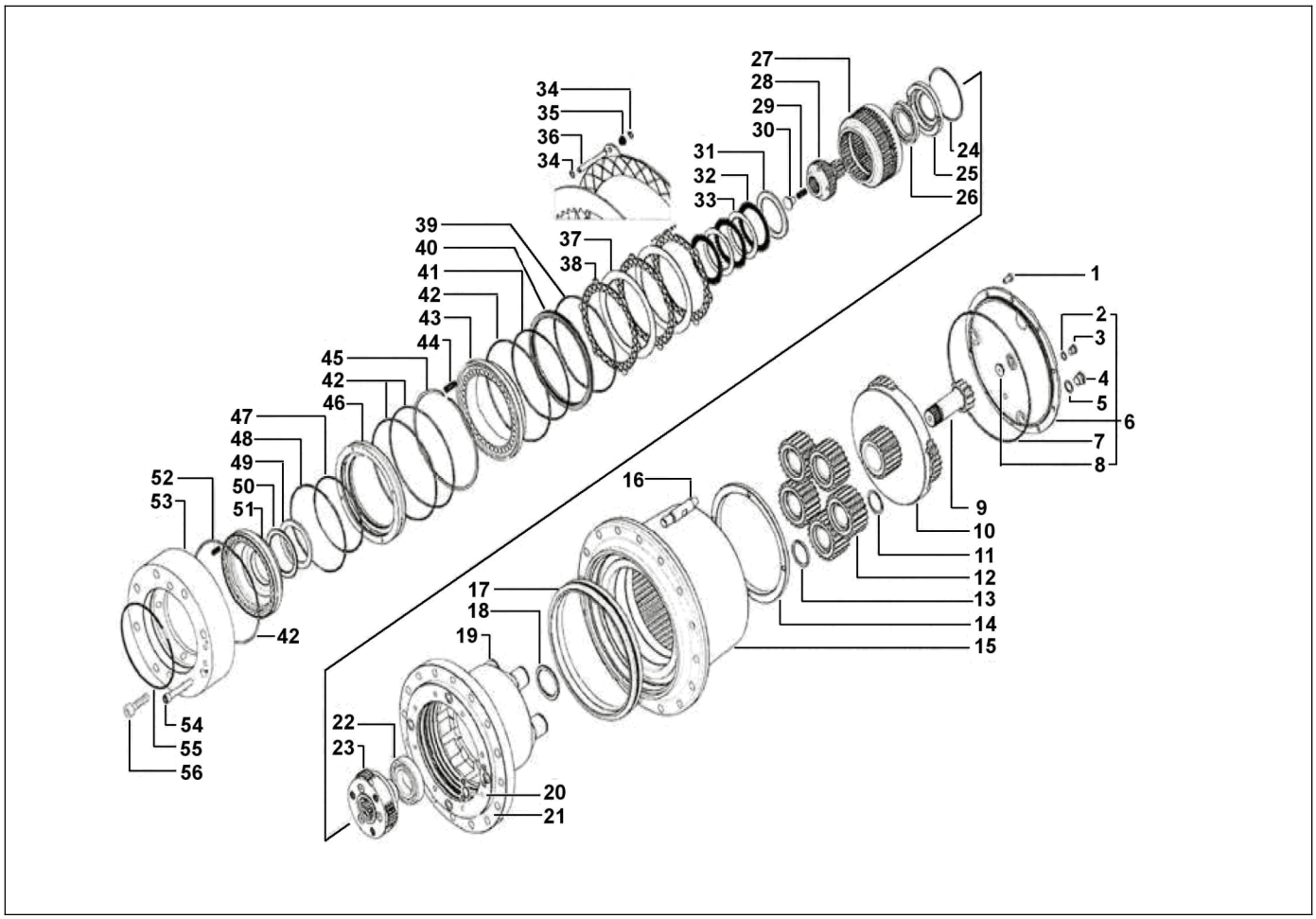

D717170600
Gearbox, track drive

Item	Part Number	Quantity	Description
37	D717951499	1	Disc
38	D717951506	1	Disc
39	D717951513	1	O-ring
40	D717951520	1	Spacer
41	D717951527	1	O-ring
42	D717951534	1	O-ring
43	D717951541	1	Piston
44	D717951548	1	Spring
45	D717951555	1	Circlip
46	D717951562	1	Spacer
47	D717951569	1	O-ring
48	D717951576	1	O-ring
49	D717951583	1	Thrust washer
50	D717951590	1	Bearing
51	D717951597	1	Piston
52	D717951604	1	Spring
53	D717951611	1	Adapter
54	D717951618	1	Screw

Please check Table of Contents for use of this assembly

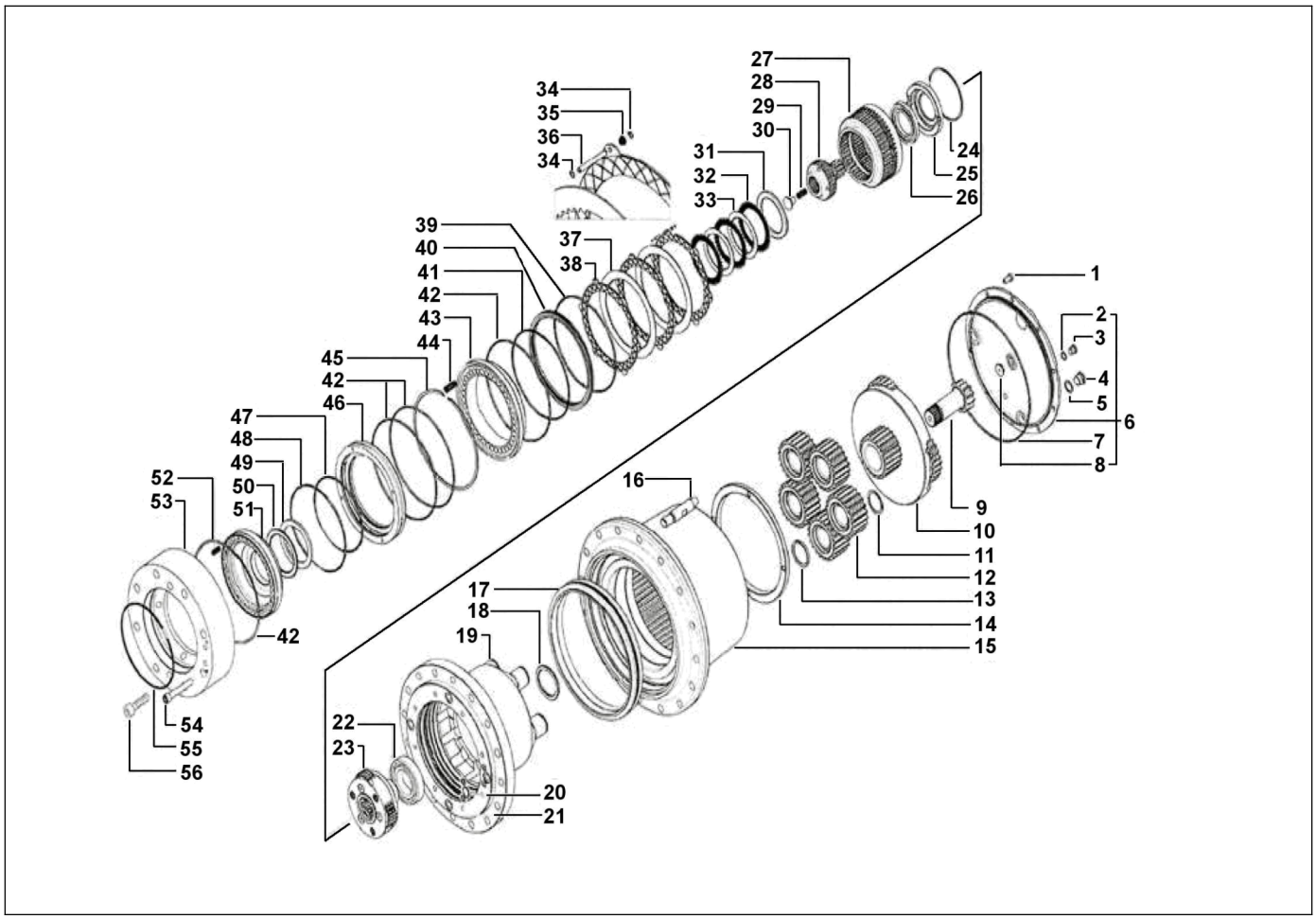

D717170600
Gearbox, track drive

Item	Part Number	Quantity	Description
55	D717951625	1	O-ring
56	D717951632	1	Screw

Please check Table of Contents for use of this assembly

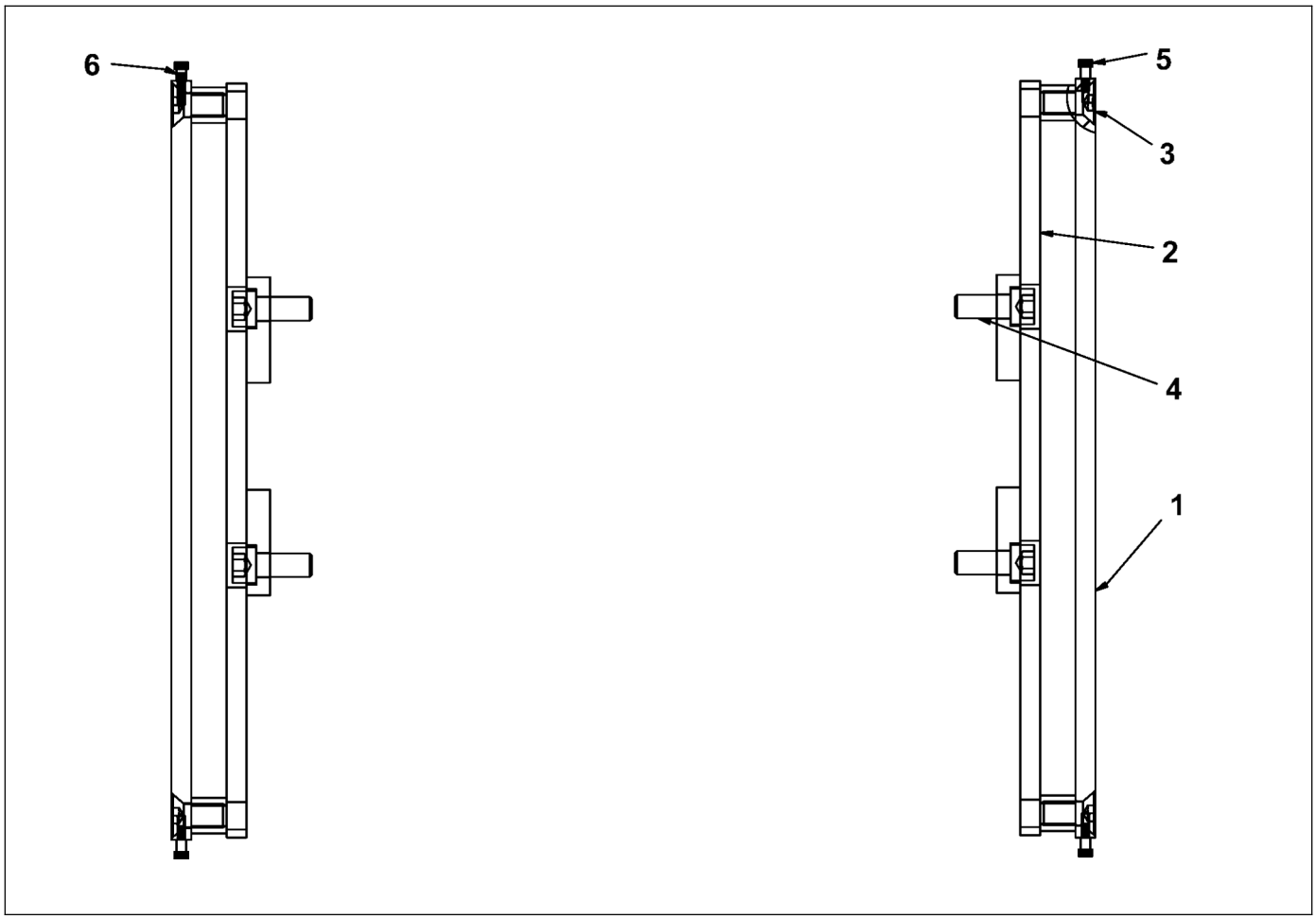

D717172001
Screed leveling guide

Item	Part Number	Quantity	Description
1	D717172007	2	Arm bracket cover
2	D717172002	2	Arm retainer
3	D717801282	8	Screw, 3/4"
4	D717801387	8	Screw, 3/4"
5	D717172011	4	Shoulder bolt
6	D717172012	2	Spring pin

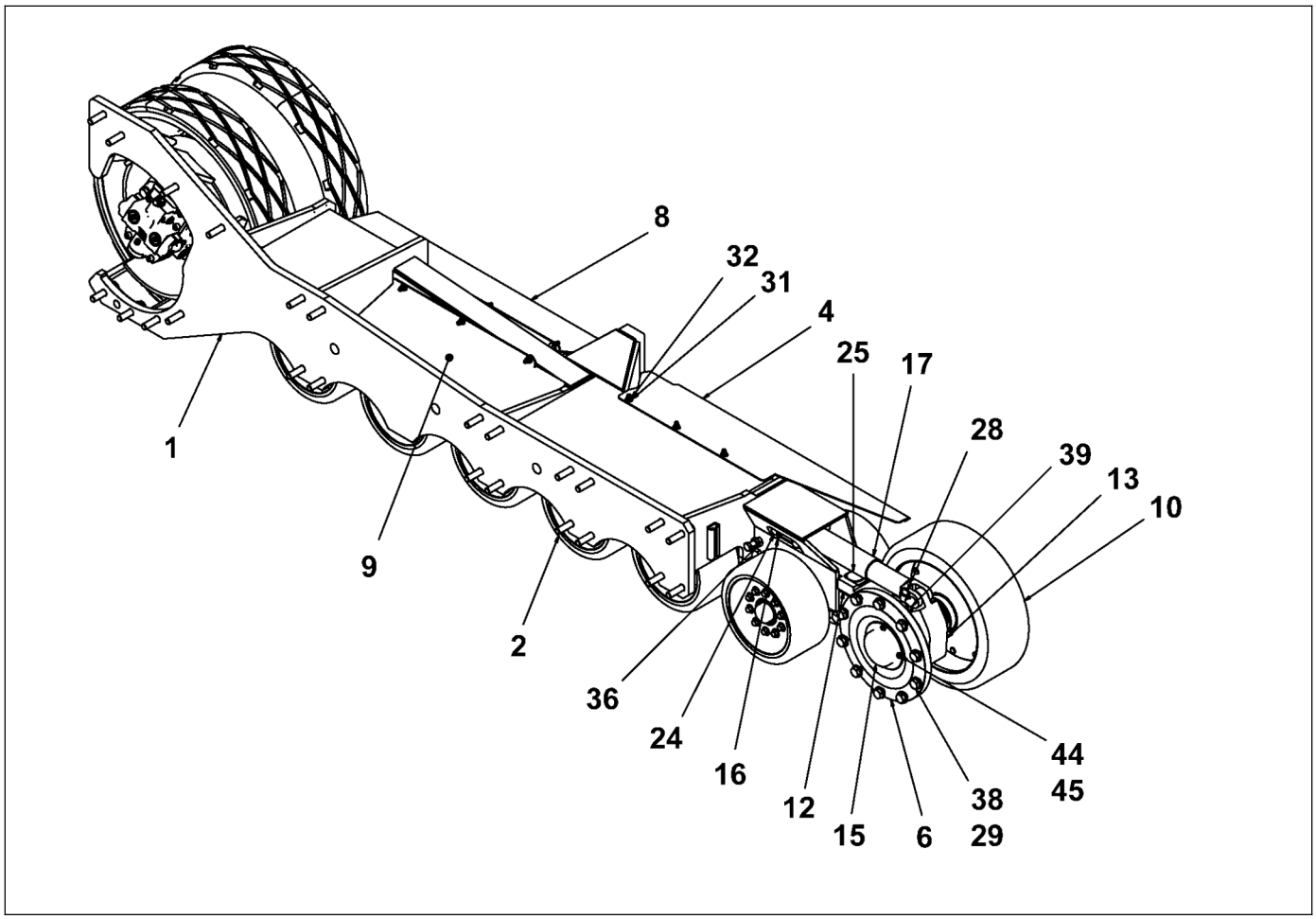

D717170500
Track left

Item	Part Number	Quantity	Description
1	D717170503	1	Track drive, left
2	D717170544	3	Bogie assembly
3	D717170570	1	Bushing, tensioner
4	D717170554	1	Track shield
5	D717170502	1	Track, Rubber, LH
6	D717170622	2	Assembly, hub, idler wheel
7	D717170582	2	Washer
8	D717170564	1	Track sheild, middle
9	D717170565	1	Track shield
10	D717170557	2	Bonded idler wheel
11	D717170583	2	Bushing
12	D717170588	1	Idler frame
13	D717170579	1	Tensioner
14	D717170602	2	Castle nut, 1 1/4"
15	D717170625	2	Dust cover, bolt-on
16	D717801226	3	Cotter pin, 3/16"
17	D717170639	1	Track tension cylinder
18	D717171010	2	Bonded drive wheel

Please check Table of Contents for use of this assembly

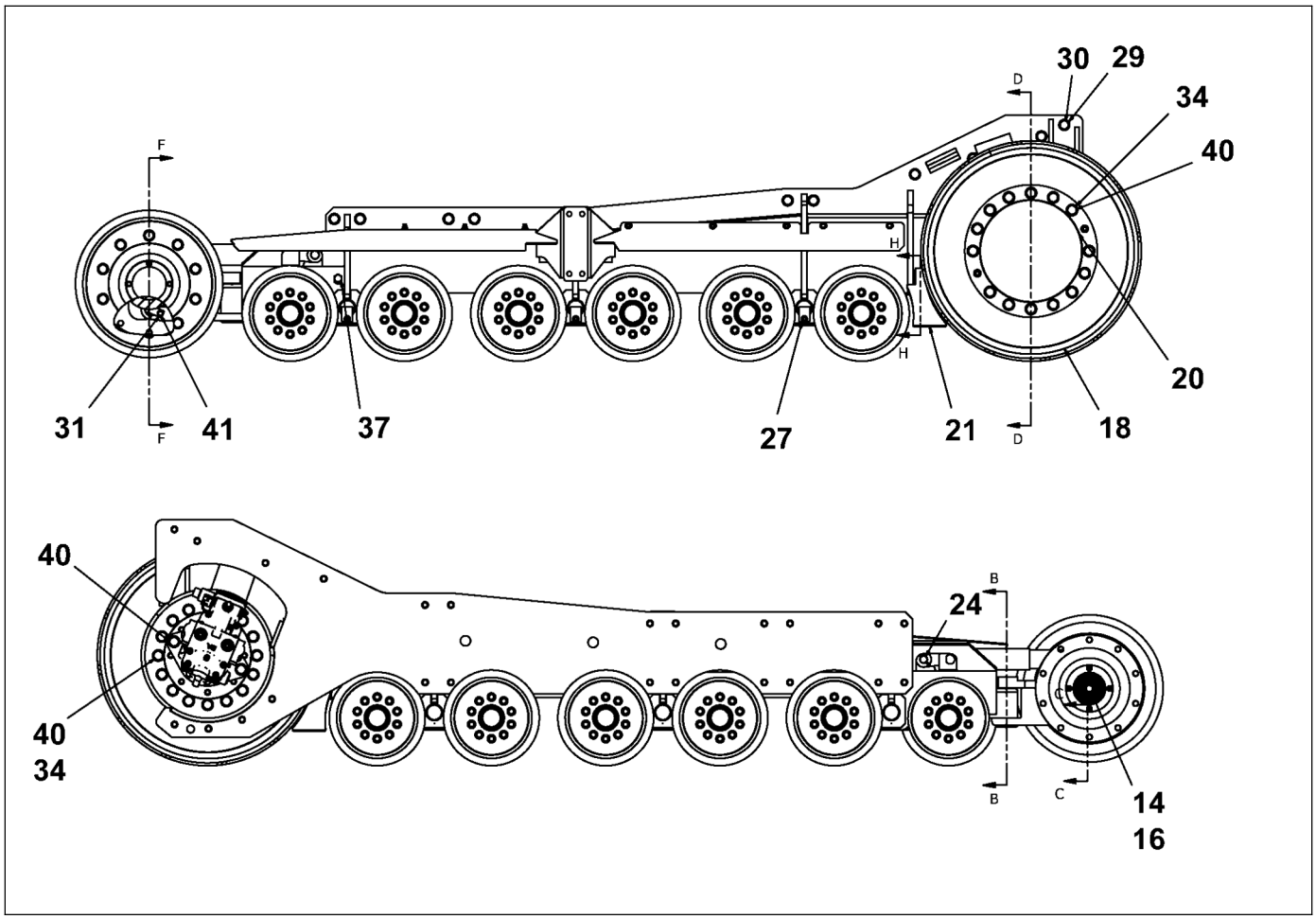

D717170500
Track left

Item	Part Number	Quantity	Description
19	D717171014	1	Motor track assy
20	D717170600	1	Gearbox, track drive
21	D717170636	1	Dirt guard
22	D717801331	8	Screw, 5/16"
23	D717170609	1	Track tensioner pin
24	D717170581	1	Pin, track tensioner cylinder anchor
25	D717170576	1	Tension pin
26	D717170577	1	Retainer, tension assembly
27	D717170584	3	Bogie pin
28	D717170601	1	Hair pin
29	D717801072	44	Narrow washer, 0.75"
30	D717170618	24	Tap bolt, 3/4"
31	D717801044	17	Narrow washer, 0.38"
32	D717800834	16	Lock nut, 3/8"
33	D717800610	1	Screw, 3/8"
34	D717801149	32	Washer, 20mm
35	D717801065	2	Washer, 1"
36	D717170614	2	Jam nut, 5/8"

Please check Table of Contents for use of this assembly

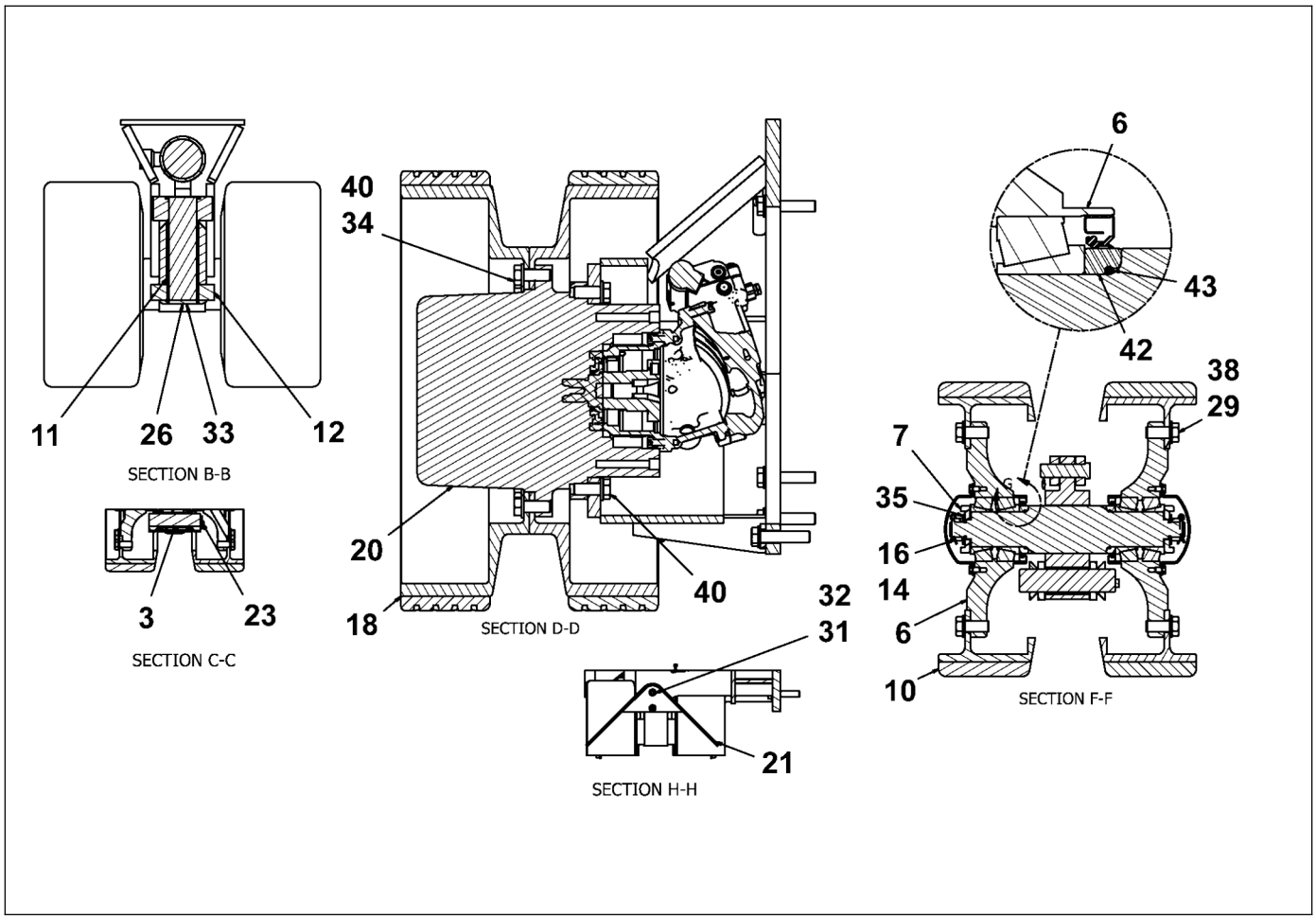

D717170500
Track left

Item	Part Number	Quantity	Description
37	D717170615	2	Screw, 5/8
38	D717801037	20	Screw, 3/4"
39	D717170616	1	Tensioning cylinder pin
40	D717800449	32	Screw, M20
41	D717800925	2	Screw, 3/8"
42	D717170627	2	Spacer
43	D717170630	2	O-ring
44	D717801331	8	Screw, 5/16"
45	D717801051	8	Narrow washer, 0.313"
46	D717800610	1	Screw, 3/8"

Please check Table of Contents for use of this assembly

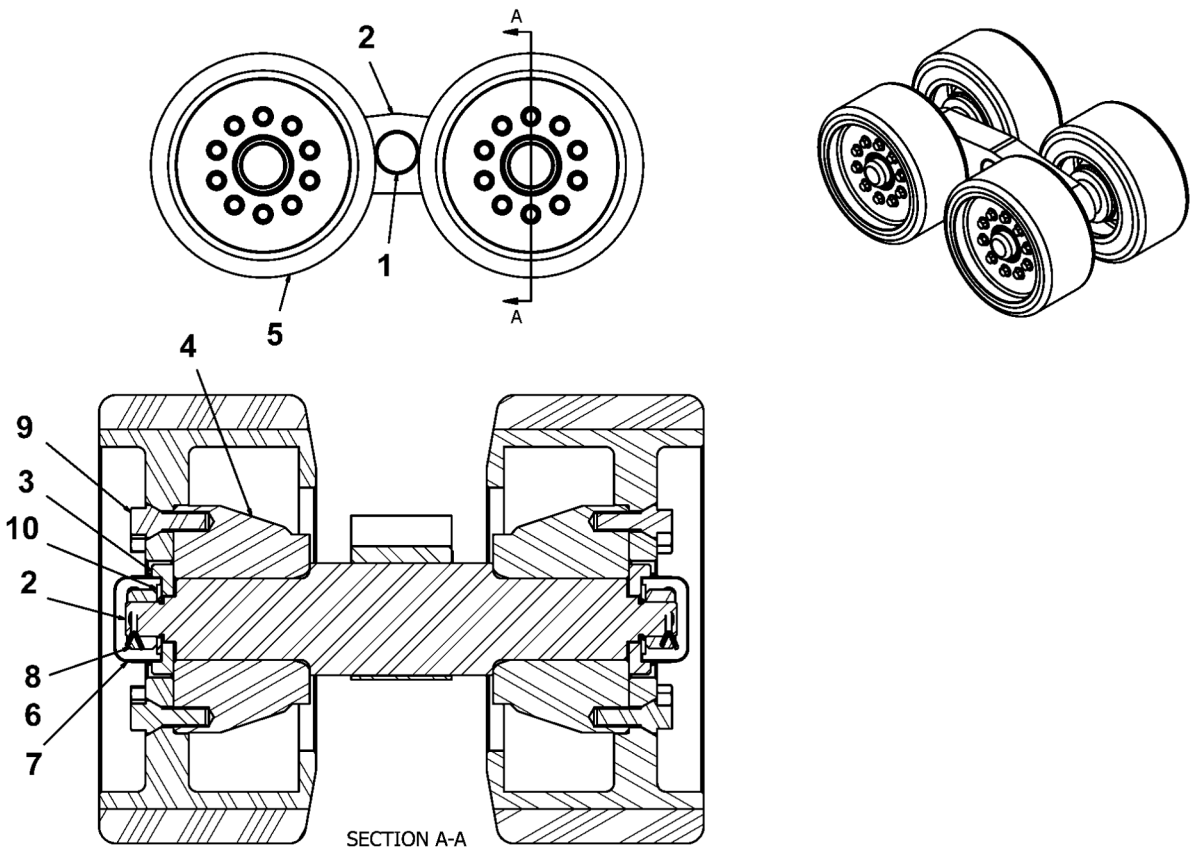

D717170544
Bogie assembly

Item	Part Number	Quantity	Description
1	D717170547	1	Bushing, bogie
2	D717170545	1	Bogie, spindle
3	D717170582	4	Washer
4	D717170550	4	Hub, bogie wheel
5	D717170558	4	Bonded roller wheel
6	D717170602	4	Castle nut, 1 1/4"
7	D717170603	4	Dust cap
8	D717801226	4	Cotter pin, 3/16"
9	D717170626	40	Wheel lug bolt, M14
10	D717801065	4	Washer, 1"

Please check Table of Contents for use of this assembly

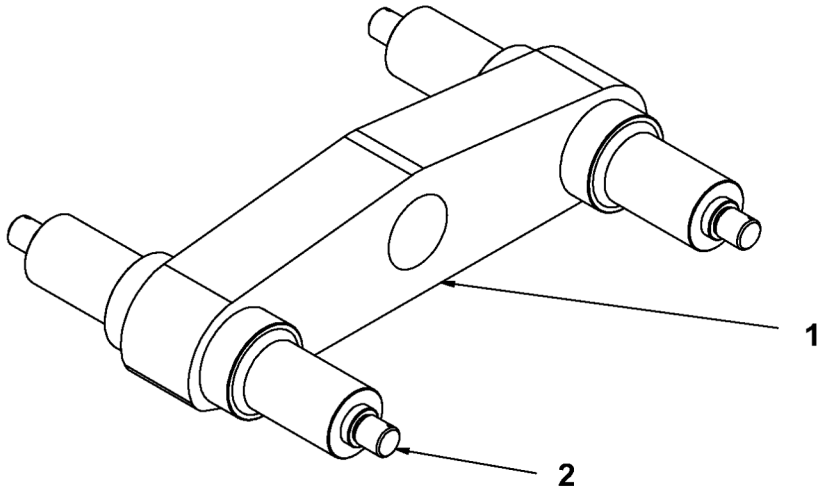

D717170545
Bogie, spindle

Item	Part Number	Quantity	Description
1	D717170546	1	Bogie spindle plate
2	D717170599	2	Bogie spindle

Please check Table of Contents for use of this assembly

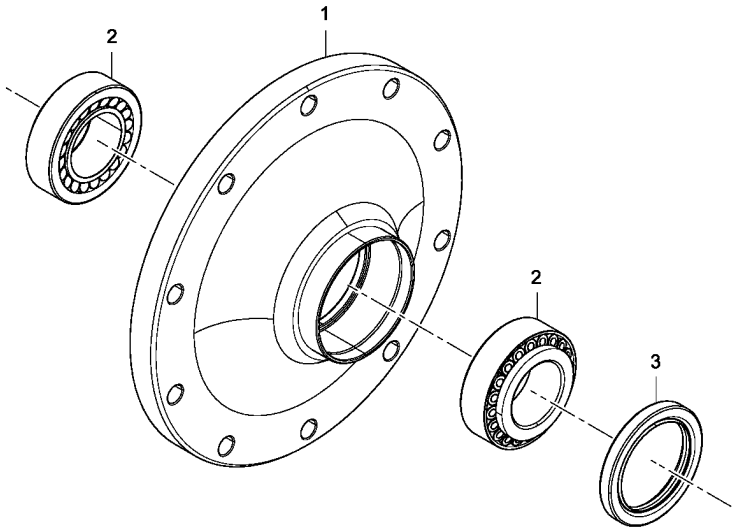

D717170622
Assembly, hub, idler wheel

Item	Part Number	Quantity	Description
1	D717170623	1	Hub, idler wheel
2	D717170629	2	Tapered roller bearing
3	D717170628	1	Seal

Please check Table of Contents for use of this assembly

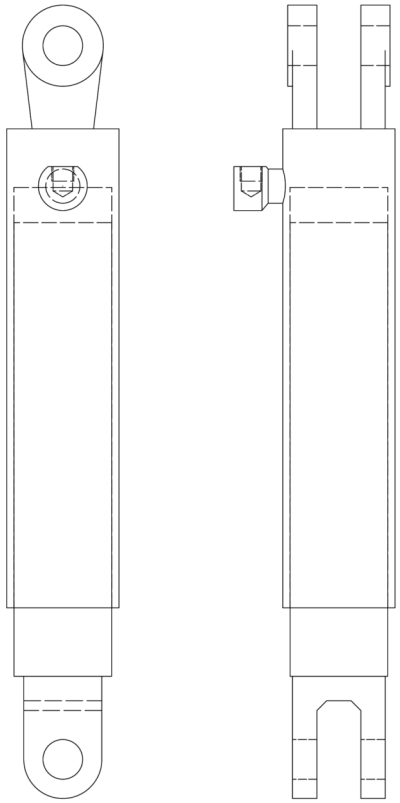

D717170639
Track tension cylinder

Item	Part Number	Quantity	Description
1	D717950757	1	Kit, gland seal
2	D717950764	1	Kit, piston seal

Please check Table of Contents for use of this assembly

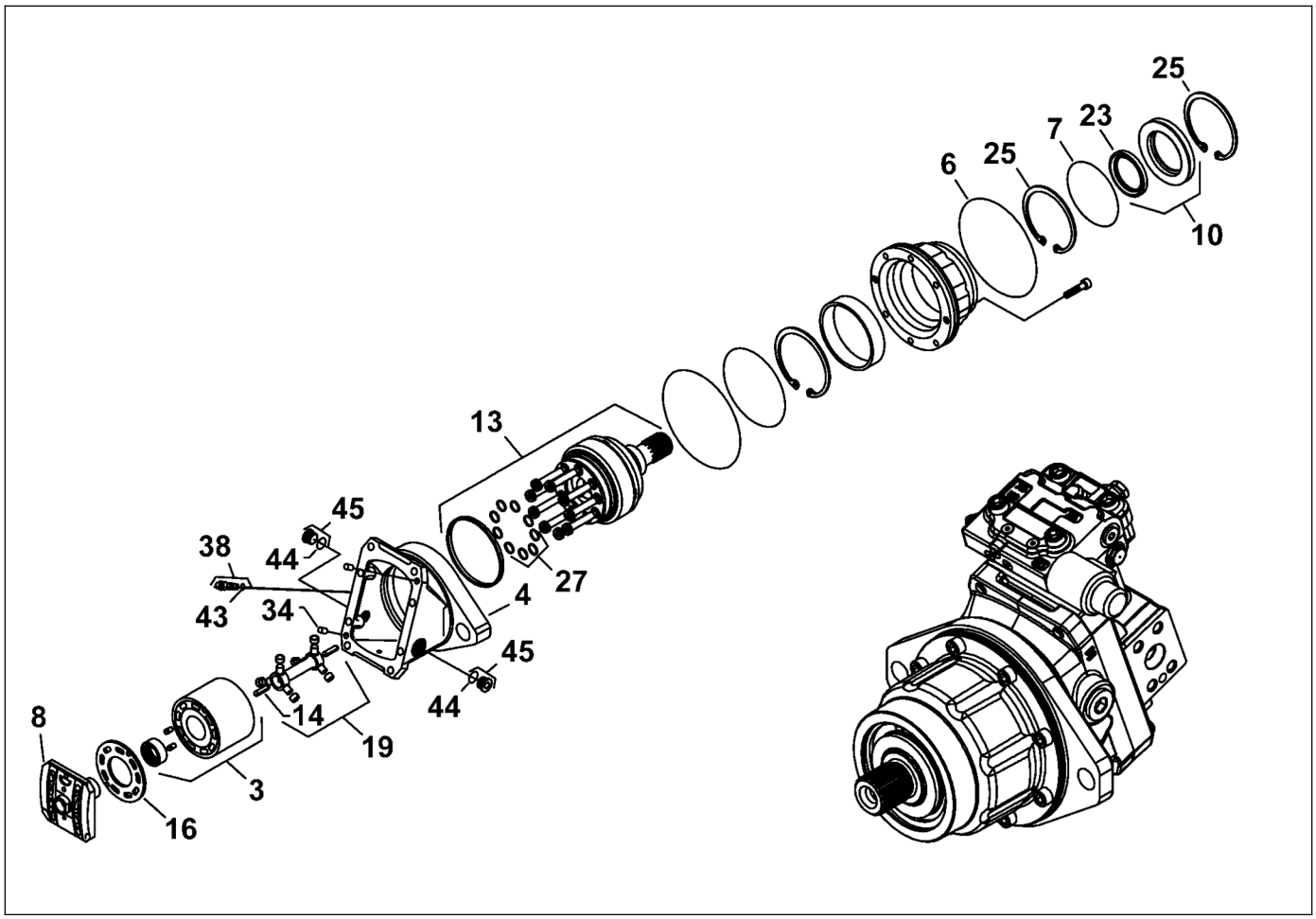

D717171014
Motor track assy

Item	Part Number	Quantity	Description
1	D717950778	1	Set screw
2	D717950785	2	Screw
3	D717950792	3	Plug
4	D717950799	1	Cylinder block
5	D717950806	1	Motor housing
6	D717950813	1	Gasket
7	D717950827	1	O-ring
8	D717950834	9	Plug
9	D717950855	1	O-ring
10	D717950862	1	Valve segment
11	D717950869	1	Screw adjusting assembly
12	D717950876	1	Seal carrier assembly
13	D717950883	1	Housing
14	D717950890	1	O-ring gasket seal
15	D717950897	1	Shaft
16	D717950904	2	Support pin
17	D717950911	2	Spring guide
18	D717950918	1	Bearing plate

Please check Table of Contents for use of this assembly

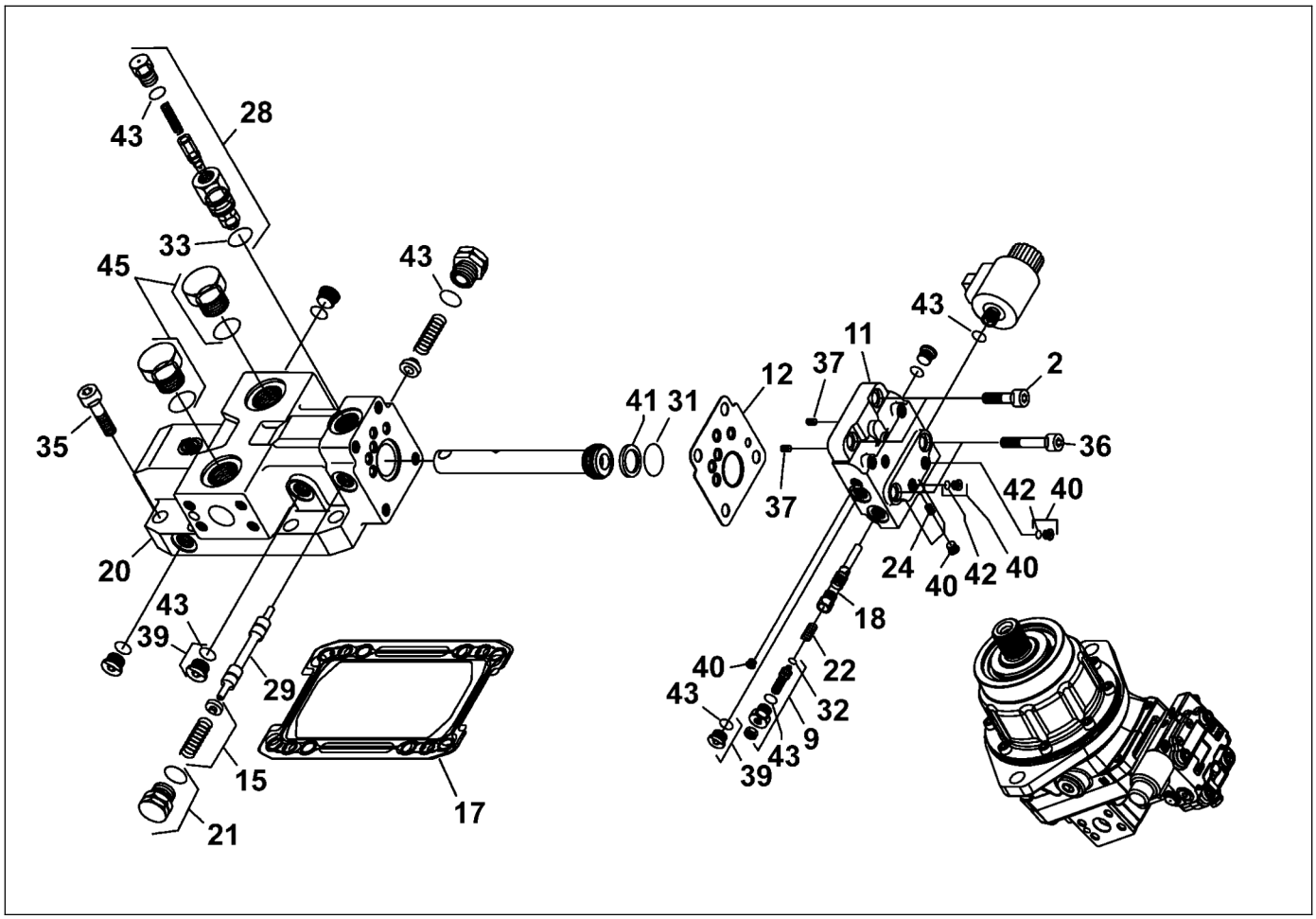

D717171014
Motor track assy

Item	Part Number	Quantity	Description
19	D717950925	1	Gasket
20	D717950932	1	Relief valve
21	D717950939	1	Synch shaft kit
22	D717950946	1	End cap
23	D717950953	2	Plug
24	D717950960	1	Spring
25	D717950967	1	Lip seal
26	D717950974	1	Ring seal
27	D717950981	1	Orifice
28	D717950988	2	Retaining ring
29	D717950995	1	Safety cap
30	D717951002	1	Piston ring kit
31	D717951009	1	Charge relief cartridge kit
32	D717951016	1	Spool
33	D717951037	1	Nut seal
34	D717951044	1	O-ring
35	D717951051	1	O-ring
36	D717951058	9	O-ring

Please check Table of Contents for use of this assembly

DYNAPAC
Part of the Atlas Copco Group

Please see previous page for drawing.

D717171014
Motor track assy

Item	Part Number	Quantity	Description
37	D717951065	9	O-ring
38	D717951072	1	O-ring
39	D717951079	4	O-ring
40	D717951086	2	Pin
41	D717951093	4	Plug
42	D717951107	8	Socket-head screw
43	D717951114	2	Screw
44	D717951121	2	Set screw
45	D717951128	1	Sensor
46	D717952927	1	Spacer
47	D717952934	1	Retaining ring
48	D717952948	1	Nut
49	D717952955	1	Servo piston assembly
50	D717953557	1	Bearing housing
51	D717953620	1	Solenoid valve
52	D717954138	8	Socket-head screw

Please check Table of Contents for use of this assembly

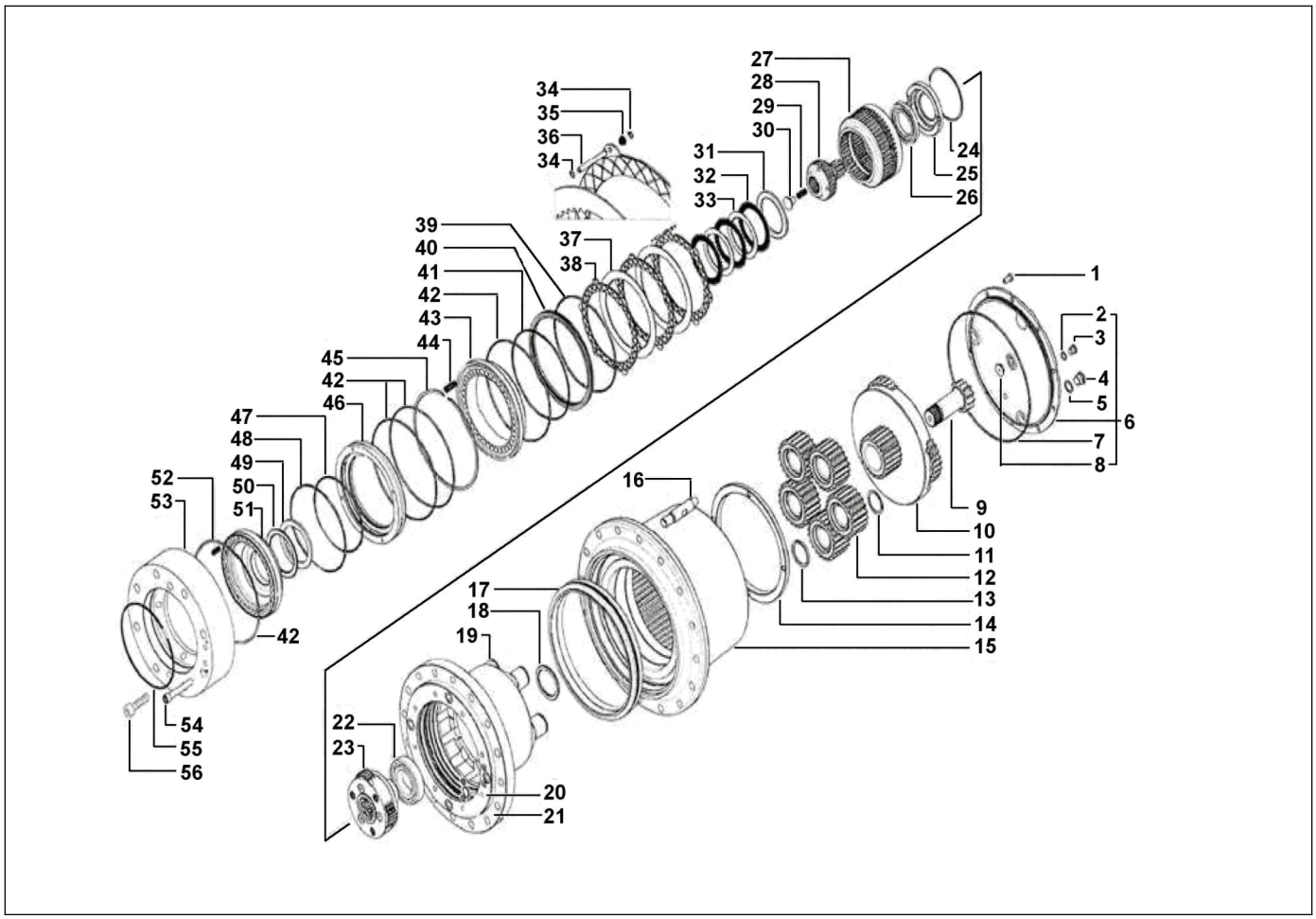

D717170600
Gearbox, track drive

Item	Part Number	Quantity	Description
1	D717951156	1	Screw
2	D717951163	1	Washer
3	D717951170	1	Plug
4	D717951177	1	Plug
5	D717951184	1	Washer
6	D717951191	1	Cover
7	D717951198	1	O-ring
8	D717951205	1	Pad
9	D717951212	1	Gear
10	D717951219	1	Reduction
11	D717951317	1	Circlip
12	D717951324	1	Planetary
13	D717951331	1	Spacer
14	D717951338	1	Nut
15	D717951345	1	Housing and bearing
16	D717951352	1	Pin
17	D717951359	1	Seal
18	D717951366	1	Ring

Please check Table of Contents for use of this assembly

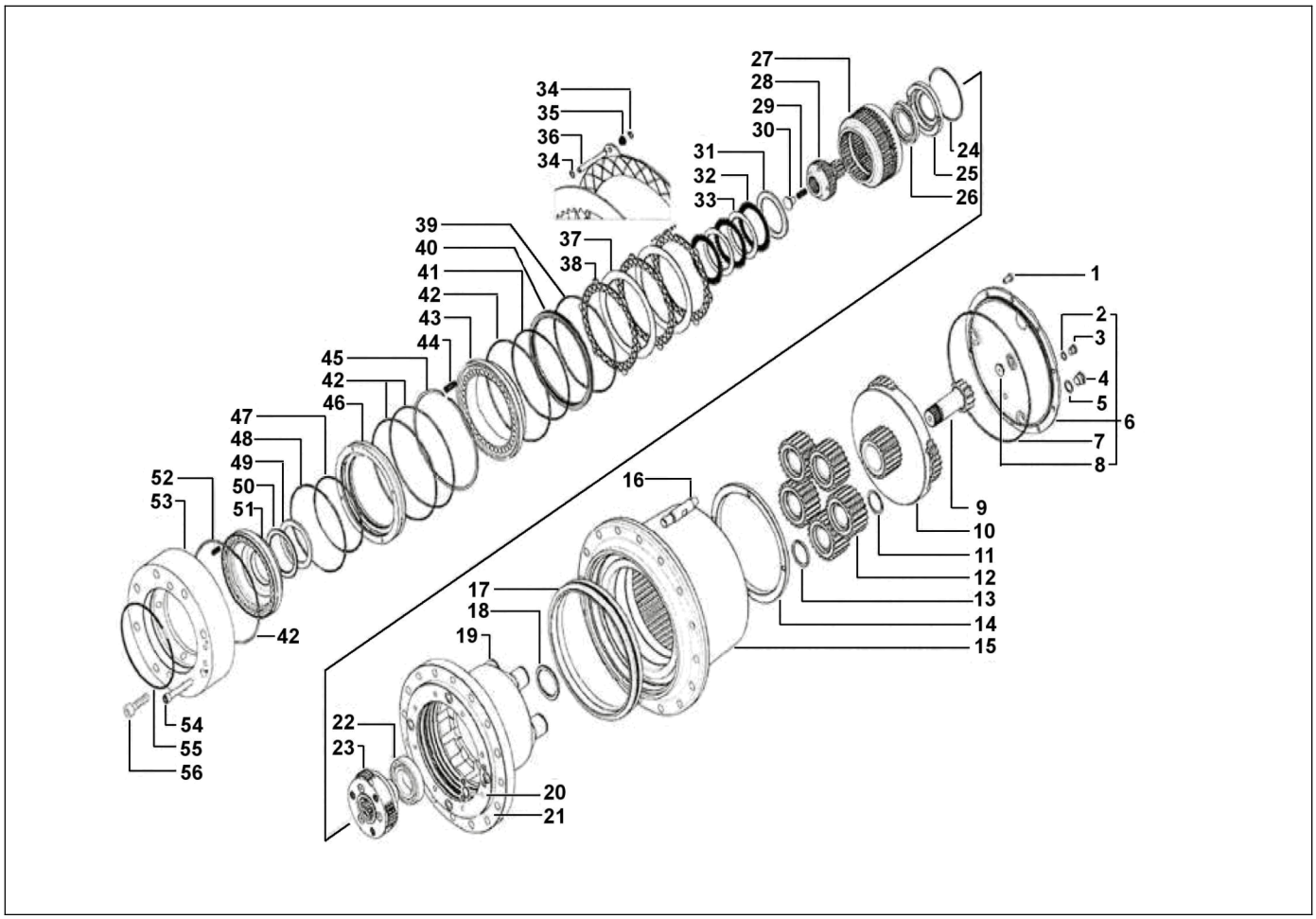

D717170600
Gearbox, track drive

Item	Part Number	Quantity	Description
19	D717951373	1	Hub
20	D717951380	1	O-ring
21	D717951387	1	O-ring
22	D717951394	1	Bearing
23	D717951401	1	Reduction
24	D717951408	1	Circlip
25	D717951415	1	Spring retaining plate
26	D717951422	1	Bearing
27	D717951429	1	Ring
28	D717951436	1	Gear
29	D717951443	1	Spring
30	D717951450	1	Disc
31	D717951457	1	Spacer
32	D717951464	1	DIsc
33	D717951471	1	Disc
34	D717951478	1	Circlip
35	D717951485	1	Spring
36	D717951492	1	Pin

Please check Table of Contents for use of this assembly

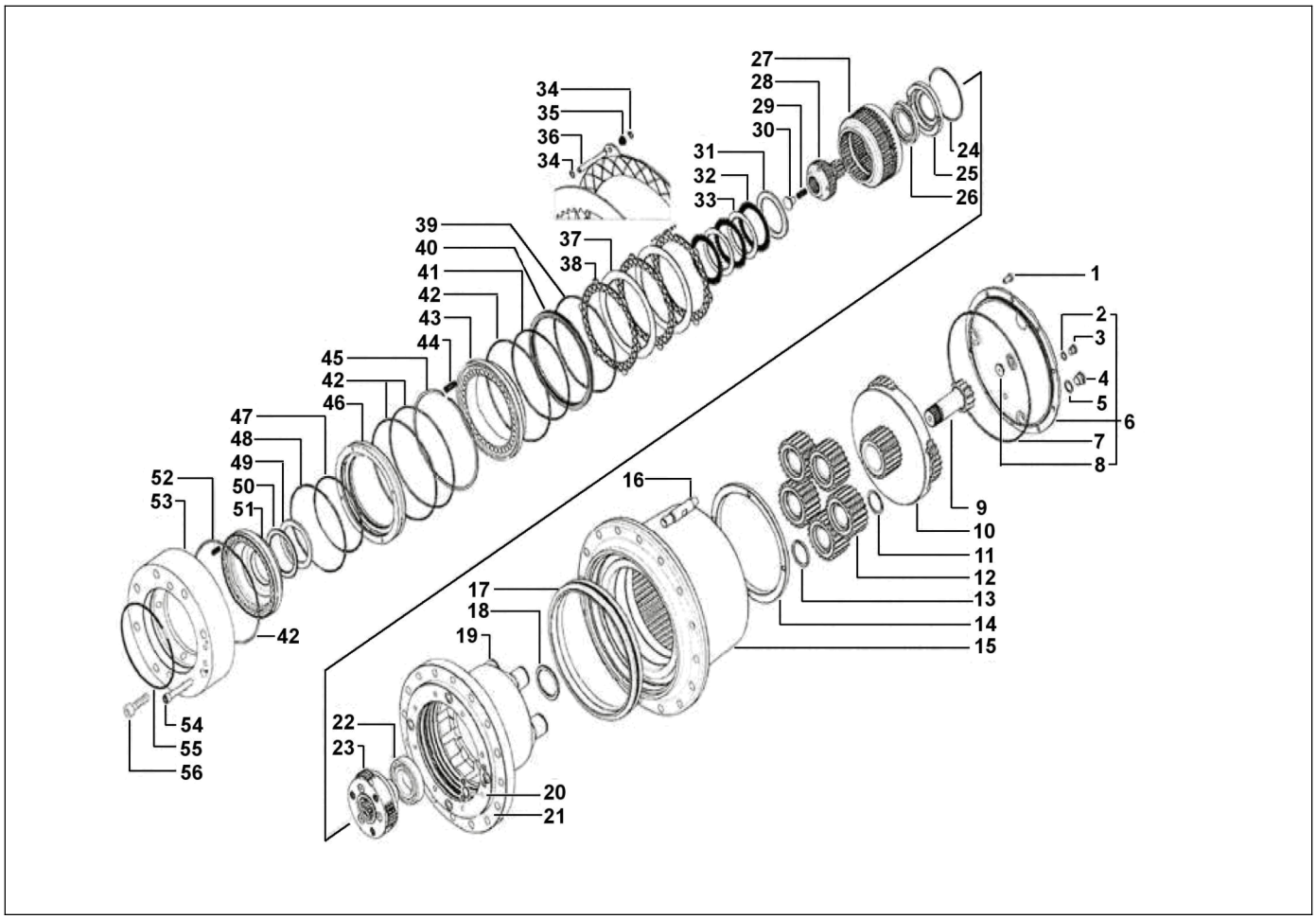

D717170600
Gearbox, track drive

Item	Part Number	Quantity	Description
37	D717951499	1	Disc
38	D717951506	1	Disc
39	D717951513	1	O-ring
40	D717951520	1	Spacer
41	D717951527	1	O-ring
42	D717951534	1	O-ring
43	D717951541	1	Piston
44	D717951548	1	Spring
45	D717951555	1	Circlip
46	D717951562	1	Spacer
47	D717951569	1	O-ring
48	D717951576	1	O-ring
49	D717951583	1	Thrust washer
50	D717951590	1	Bearing
51	D717951597	1	Piston
52	D717951604	1	Spring
53	D717951611	1	Adapter
54	D717951618	1	Screw

Please check Table of Contents for use of this assembly

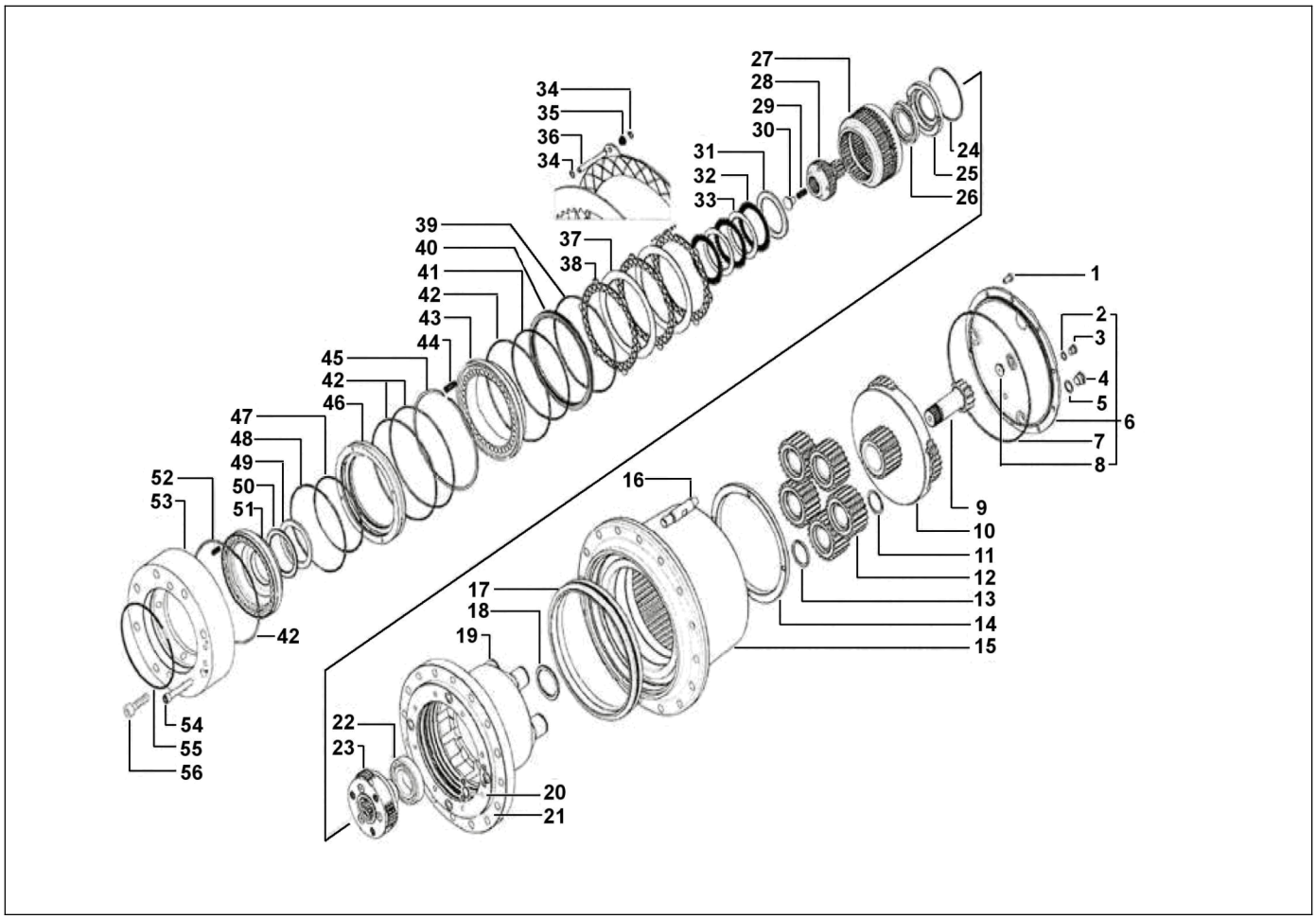

D717170600
Gearbox, track drive

Item	Part Number	Quantity	Description
55	D717951625	1	O-ring
56	D717951632	1	Screw

Please check Table of Contents for use of this assembly

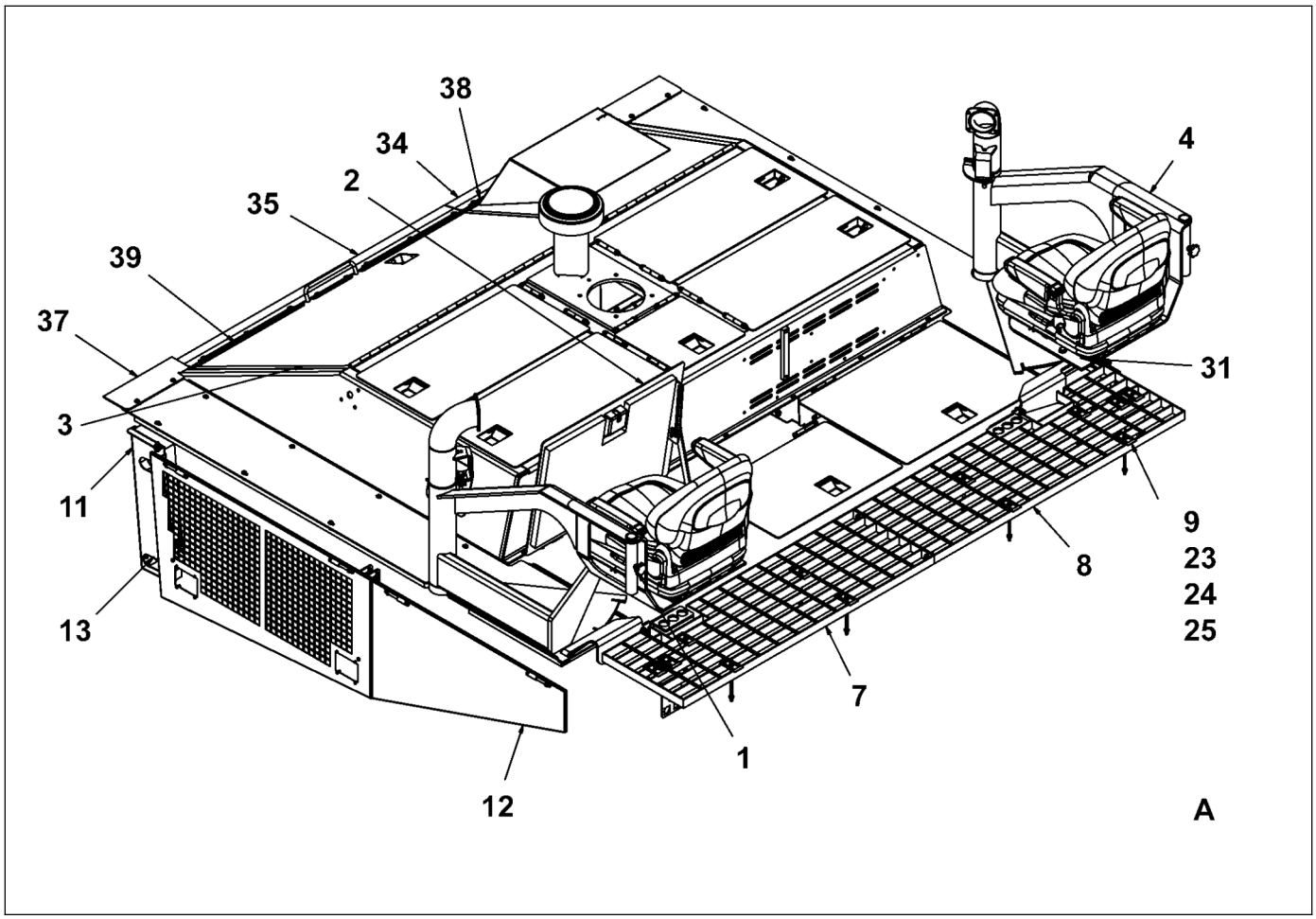

D717110000
Platform

Item	Part Number	Quantity	Description
1	D717113000	1	Operator station, left
2	D717110500	1	Footwell, platform
3	D717111500	1	Hood frame
4	D717113500	1	Operator station, right
7	D717110003	1	Grating, rear
8	D717110004	1	Grating, rear
9	D717110006	12	Clip, Grating tie down
10	D717110009	1	Bracket, right side door assy
11	D717110011	1	Bracket, left side door assy
12	D717114000	1	Side moulding
13	D717111570	1	Insulation pad, Panel, Cylinder, left
14	D717111569	1	Insulation pad, Panel, Cylinder, right
16	D717800834	10	Lock nut, 3/8"
17	D717800596	2	Screw, 3/8"
18	D717801044	30	Narrow washer, 0.38"
19	D717800603	4	Screw, 3/8"
20	D717085048	1	Assembly, radiator shroud
23	D717801051	16	Narrow washer, 0.313"

Please check Table of Contents for use of this assembly

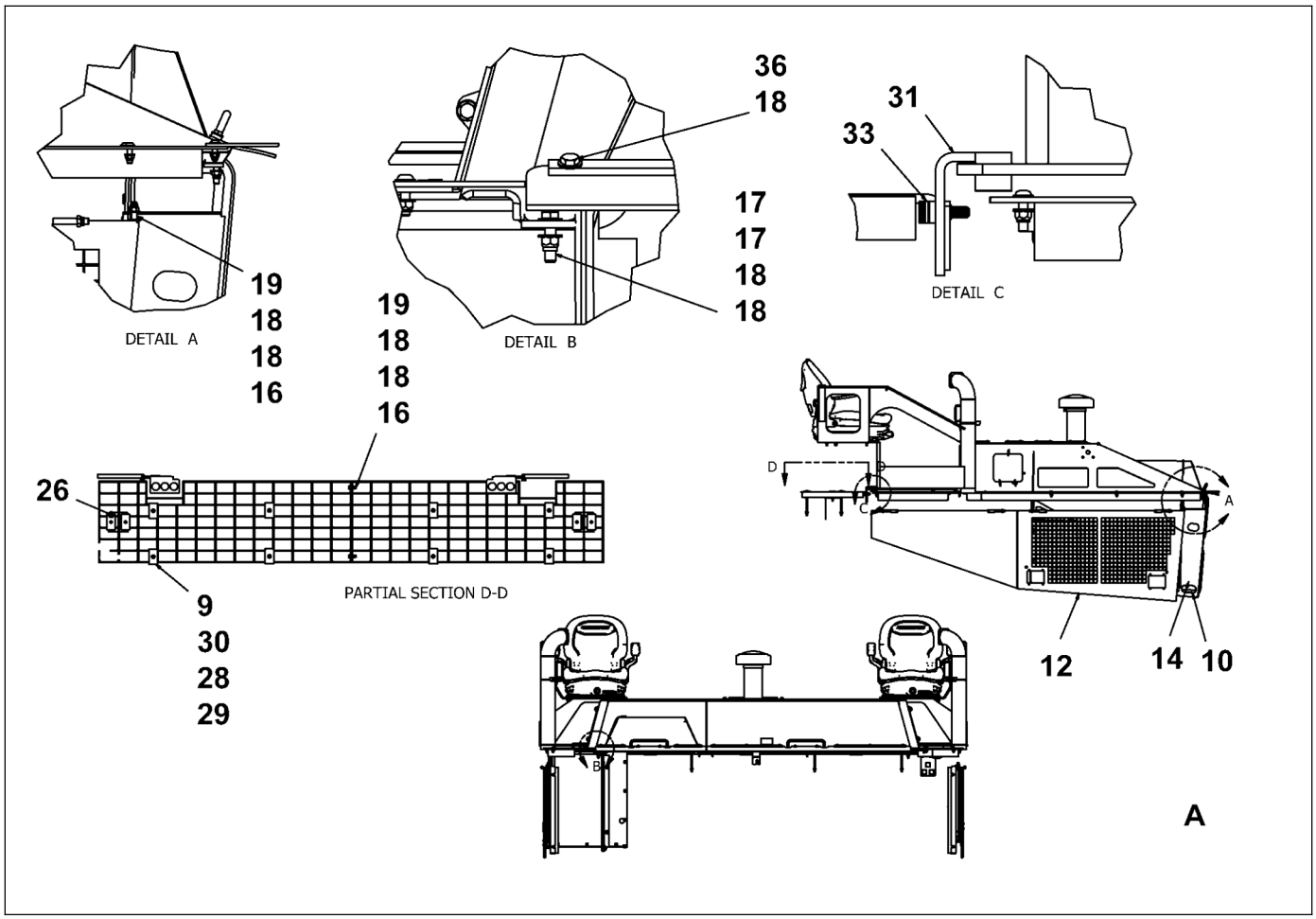

D717110000
Platform

Item	Part Number	Quantity	Description
24	D717800827	8	Lock nut, 5/16"
25	D717801597	8	Screw, 5/16"
26	D717110014	2	Bracket, sensor connector
28	D717801058	4	Narrow flat washer, 0.25"
29	D717800785	4	Nyloc nut, 1/4"
30	D717800666	4	Screw, 1/4"
31	D717110017	1	Pivot release, right
32	D717110018	1	Pivot release, left
33	D717110020	2	Shoulder bolt
34	4812200234	1	Hood door seal, left
35	4812200235	1	Hood door seal, right
36	D717800617	14	Screw, 3/8"
37	4812200236	2	Platform walkway seal
38	4812200215	2	Hood seal backing plate
39	4812200287	2	Hood seal backing plate
	4812221633	1	Hand rail

Please check Table of Contents for use of this assembly

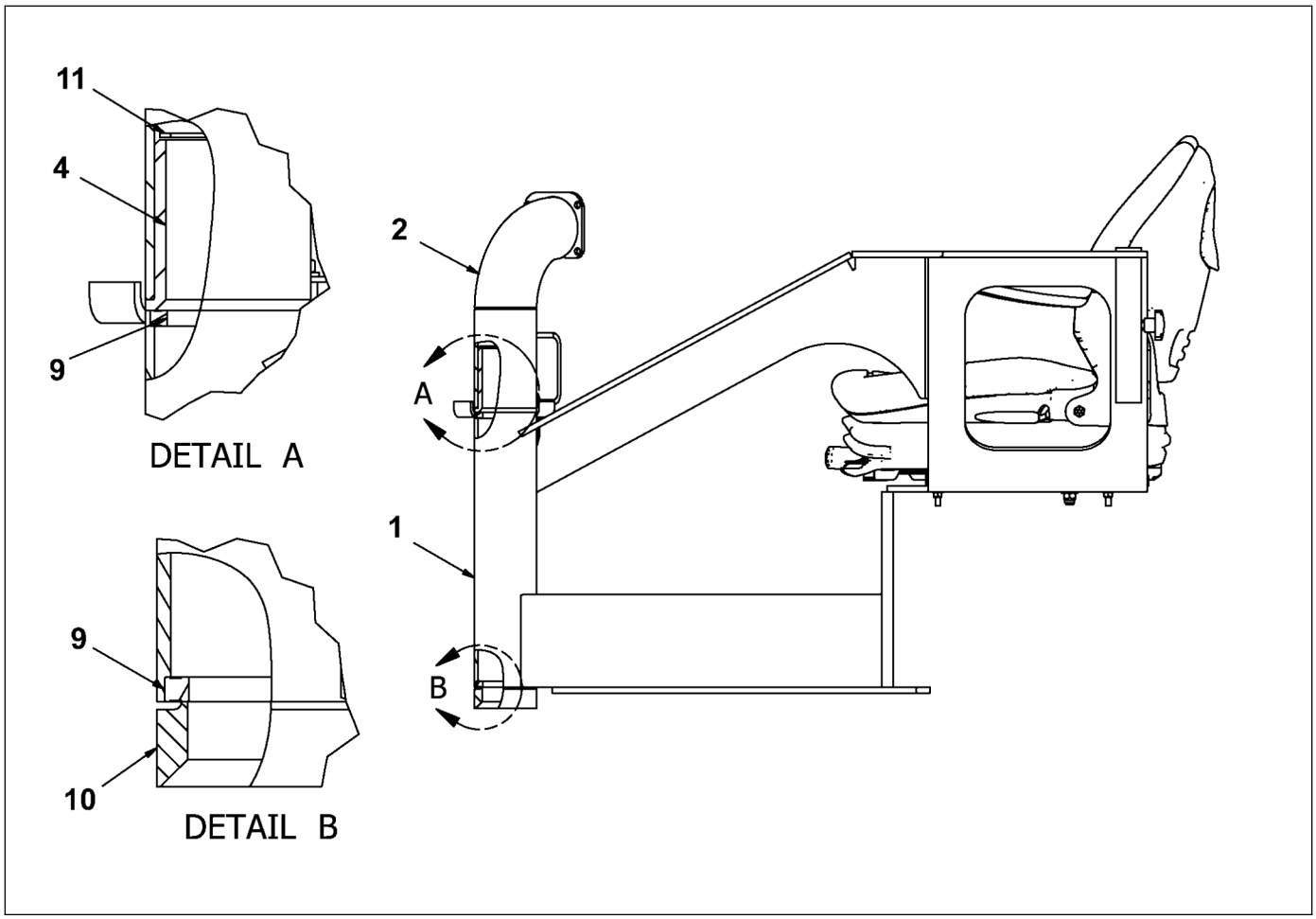

D717113000
Operator station, left

Item	Part Number	Quantity	Description
1	D717113001	1	Swing station frame
2	D717113009	1	Swing arm
3	4812250003	1	Seat
4	4812222124	1	Swing arm spacer
7	D717113040	1	Knob, umbrella clamp
8	D717800890	1	Jam nut, 5/8"
9	D717113047	2	Bearing, operator swing arm
10	4812200214	1	Lower bearing stop
11	D717113048	1	Snap ring, operator station
12	4700904229	4	Washer, #8
13	4700586003	4	Nut, M8
16	D717801086	6	Flat washer, 0.5"
17	D717800736	2	Screw, 1/2"
18	D717800862	3	Lock nut, 1/2"
19	4700343775	2	Wire
20	D717800708	1	Screw, 1/2"
21	4812222126	1	Spacer holder
	D717904500	1	Umbrella

Please check Table of Contents for use of this assembly

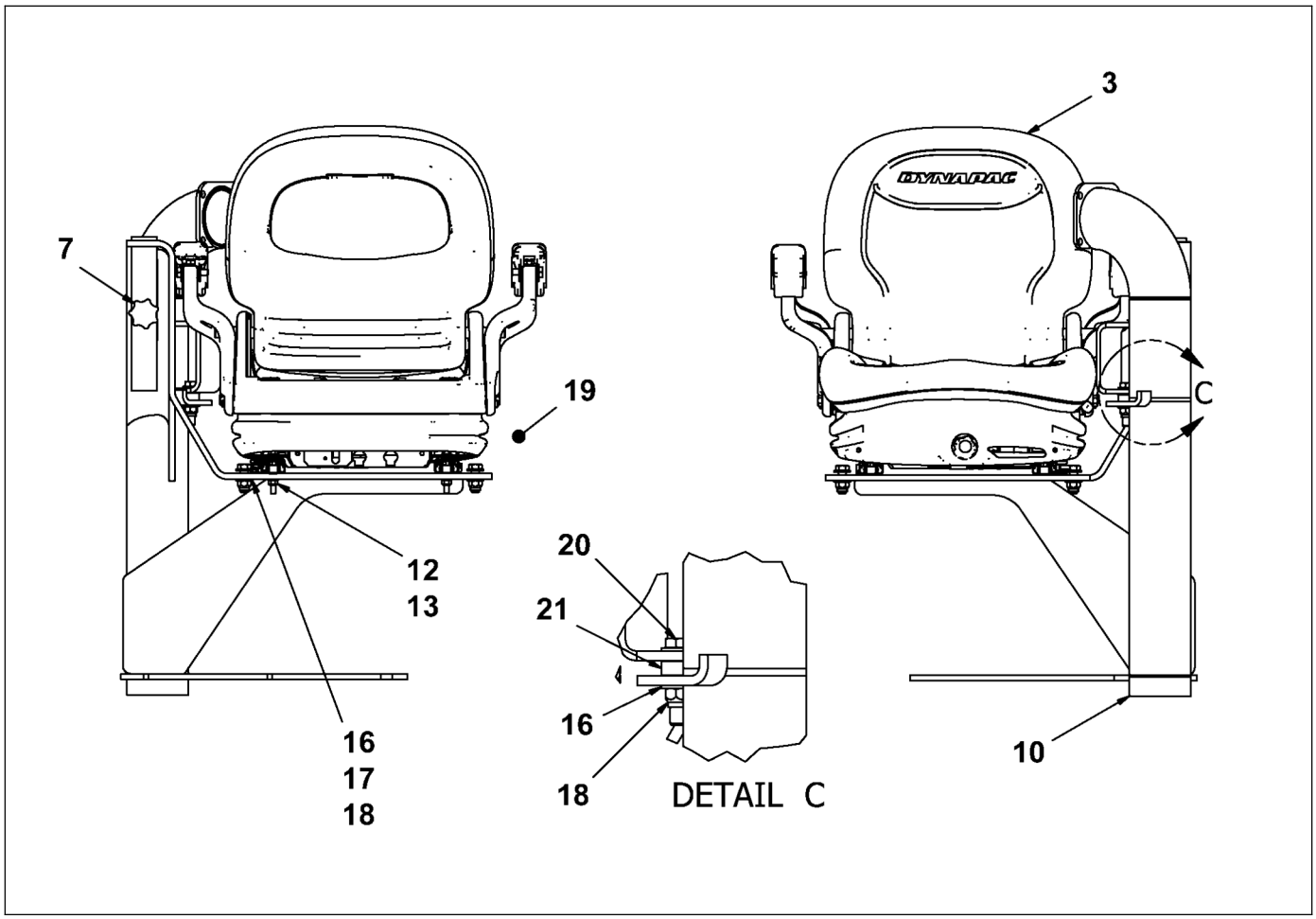

D717113000
Operator station, left

Item	Part Number	Quantity	Description
1	D717113001	1	Swing station frame
2	D717113009	1	Swing arm
3	4812250003	1	Seat
4	4812222124	1	Swing arm spacer
7	D717113040	1	Knob, umbrella clamp
8	D717800890	1	Jam nut, 5/8"
9	D717113047	2	Bearing, operator swing arm
10	4812200214	1	Lower bearing stop
11	D717113048	1	Snap ring, operator station
12	4700904229	4	Washer, #8
13	4700586003	4	Nut, M8
16	D717801086	6	Flat washer, 0.5"
17	D717800736	2	Screw, 1/2"
18	D717800862	3	Lock nut, 1/2"
19	4700343775	2	Wire
20	D717800708	1	Screw, 1/2"
21	4812222126	1	Spacer holder
	D717904500	1	Umbrella

Please check Table of Contents for use of this assembly

D717904500
Umbrella

Item	Part Number	Quantity	Description
1	4812200196	1	Umbrella

Please check Table of Contents for use of this assembly

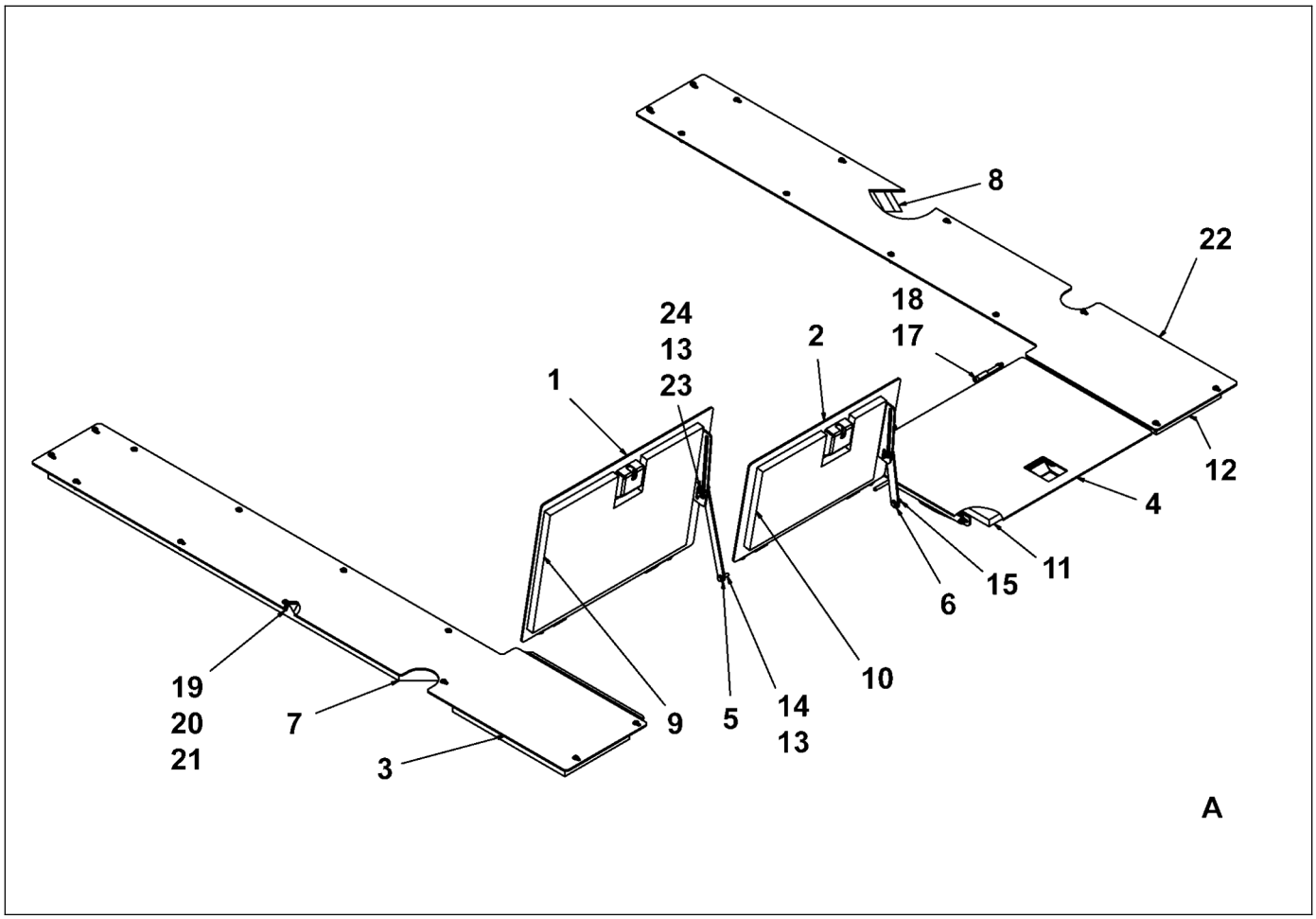

D717110500
Footwell, platform

Item	Part Number	Quantity	Description
1	D717110502	1	Door, left
2	D717110504	1	Door, middle
3	D717110506	1	Plate, lh side extension
4	D717110510	1	Door, right
5	D717111525	2	Door stop, rear hood
6	D717110508	1	Plate, door stop
7	D717111548	1	Insulation Pad, side, left walk
8	D717111547	1	Insulation pad, side, right walk
9	D717111543	1	Insulation pad, rear left door
10	D717111542	1	Insulation pad, rear mid door
11	D717111545	1	Insulation pad, rear, right door
12	D717111546	2	Insulation pad, right rear walk
13	D717801044	8	Narrow washer, 0.38"
14	D717800603	1	Screw, 3/8"
15	D717800610	1	Screw, 3/8"
17	D717800582	1	Screw, 3/8"
18	D717111580	6	Screw, M10
19	D717800820	6	Lock nut, M10

Please check Table of Contents for use of this assembly

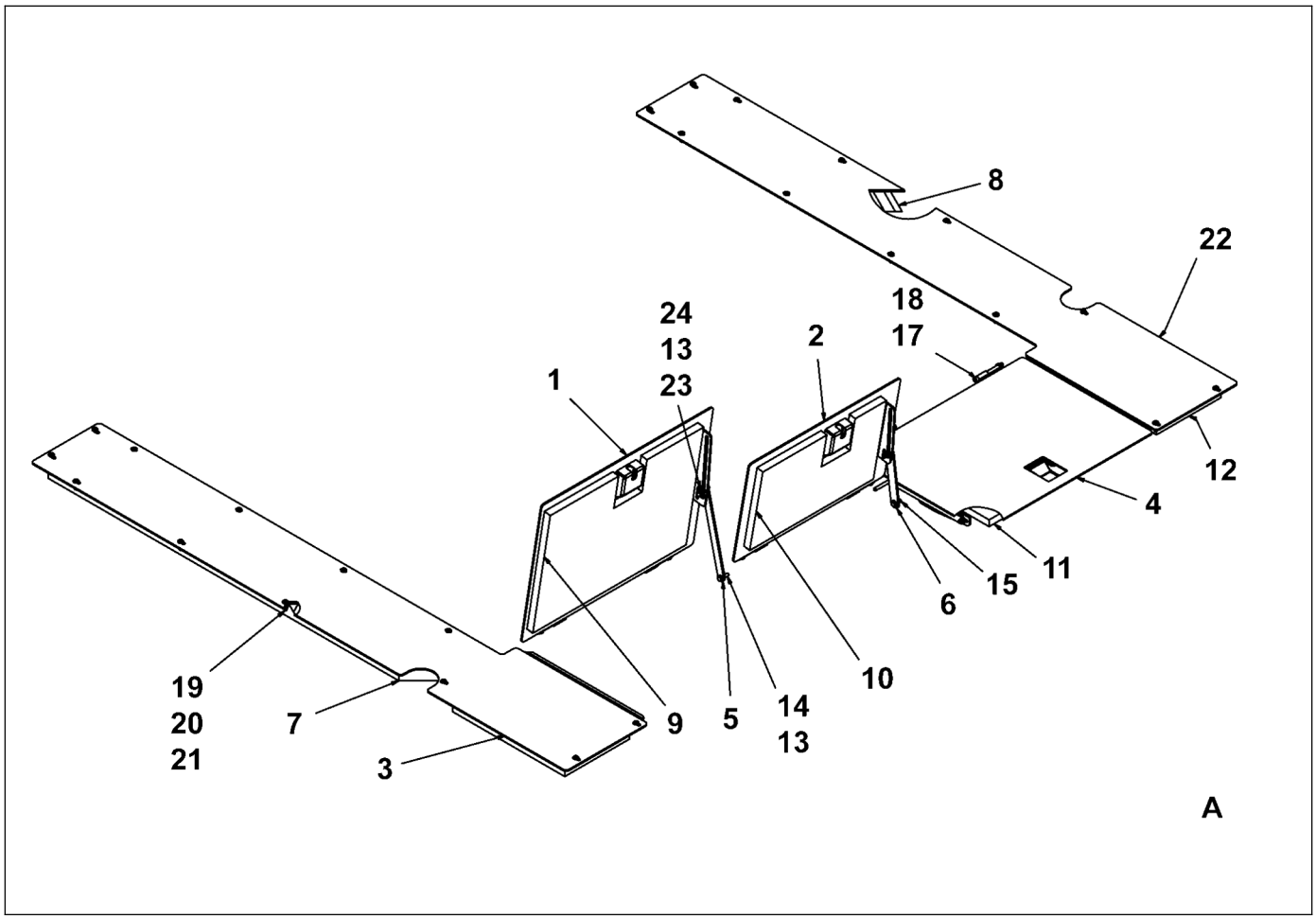

D717110500
Footwell, platform

Item	Part Number	Quantity	Description
20	D717801051	46	Narrow washer, 0.313"
21	D717800827	22	Lock nut, 5/16"
22	D717800995	24	Screw, 5-16"
23	D717110507	1	Plate
24	D717115003	3	Shoulder bolt, 3/8"
25	D717800904	3	Lock nut, 5/16"

Please check Table of Contents for use of this assembly

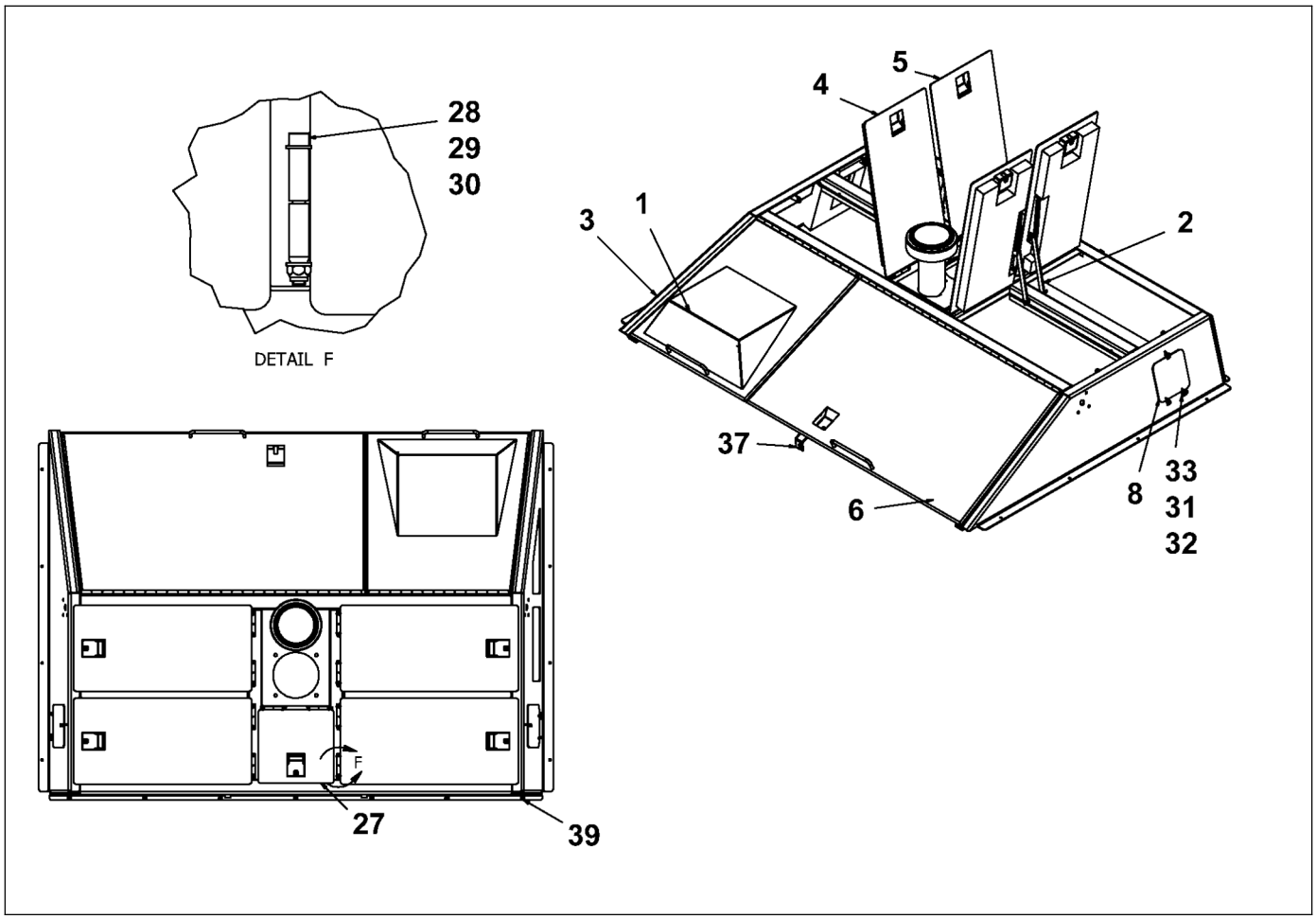

D717111500
Hood frame

Item	Part Number	Quantity	Description
1	D717111514	1	Front hood cover
2	D717111525	6	Door stop, rear hood
3	D717111501	1	Hood frame
4	D717111511	2	Hood cover
5	D717111528	2	Hood cover
6	D717111534	1	Front hood cover, curbside
7	D717800603	1	Screw, 3/8"
8	D717111538	2	Fuel door
9	D717801338	2	Screw, 3/8"
10	D717111556	1	Insulation pad, front right, right side
11	D717111555	1	Insulation pad, front left, right side
12	D717111561	1	Insulation pad, front tube, bottom
13	D717111563	2	Insulation pad, mid tube bottom
14	D717111566	1	Insulation pad, side right
15	D717111550	2	Insulation pad , top left rear
16	D717111551	2	Insulation pad, top right rear
17	D717111560	1	Insulation pad, front left
18	D717111559	1	Insulation pad, front mid

Please check Table of Contents for use of this assembly

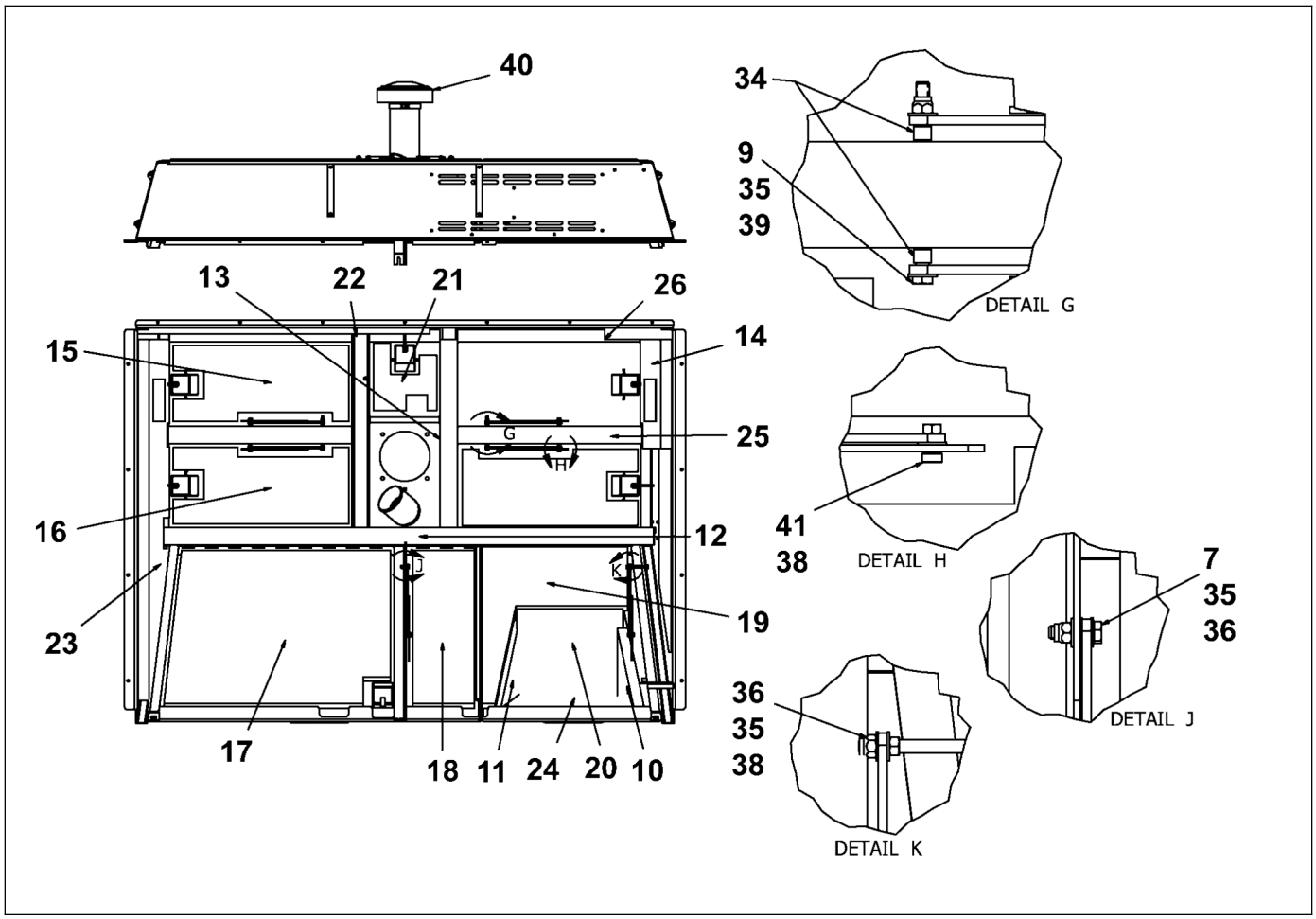

D717111500
Hood frame

Item	Part Number	Quantity	Description
19	D717111554	1	Insulation pad, front, right door
20	D717111558	1	Insulation pad, front right top
21	D717111549	1	Insulation pad, top rear mid
22	D717111564	1	Insulation pad, rear upright
23	D717111565	1	Insulation pad, side left
24	D717111557	1	Insulation pad, front, right, front
25	D717111562	2	Insulation pad, cross tube, bottom
26	D717111577	1	Insulation pad, rear right
27	D717111536	1	Door, battery switch
28	D717111580	10	Screw, M10
29	D717801135	20	Washer, 10mm
30	D717800820	10	Lock nut, M10
31	D717801051	11	Narrow washer, 0.313"
32	D717800827	2	Lock nut, 5/16"
33	D717800561	2	Screw, 5/16"
34	D717111581	4	Spacer, prop rod
35	D717801044	15	Narrow washer, 0.38"
36	D717800834	4	Lock nut, 3/8"

Please check Table of Contents for use of this assembly

DYNAPAC
Part of the Atlas Copco Group

Please see previous page for drawing.

D717111500
Hood frame

Item	Part Number	Quantity	Description
37	D717111584	1	Supprt, hood frame
38	D717801023	7	Hex nut, 5/16"
39	D717800988	7	Screw, 5/16"
40	D717111531	1	Cover
41	D717115003	6	Shoulder bolt, 3/8"

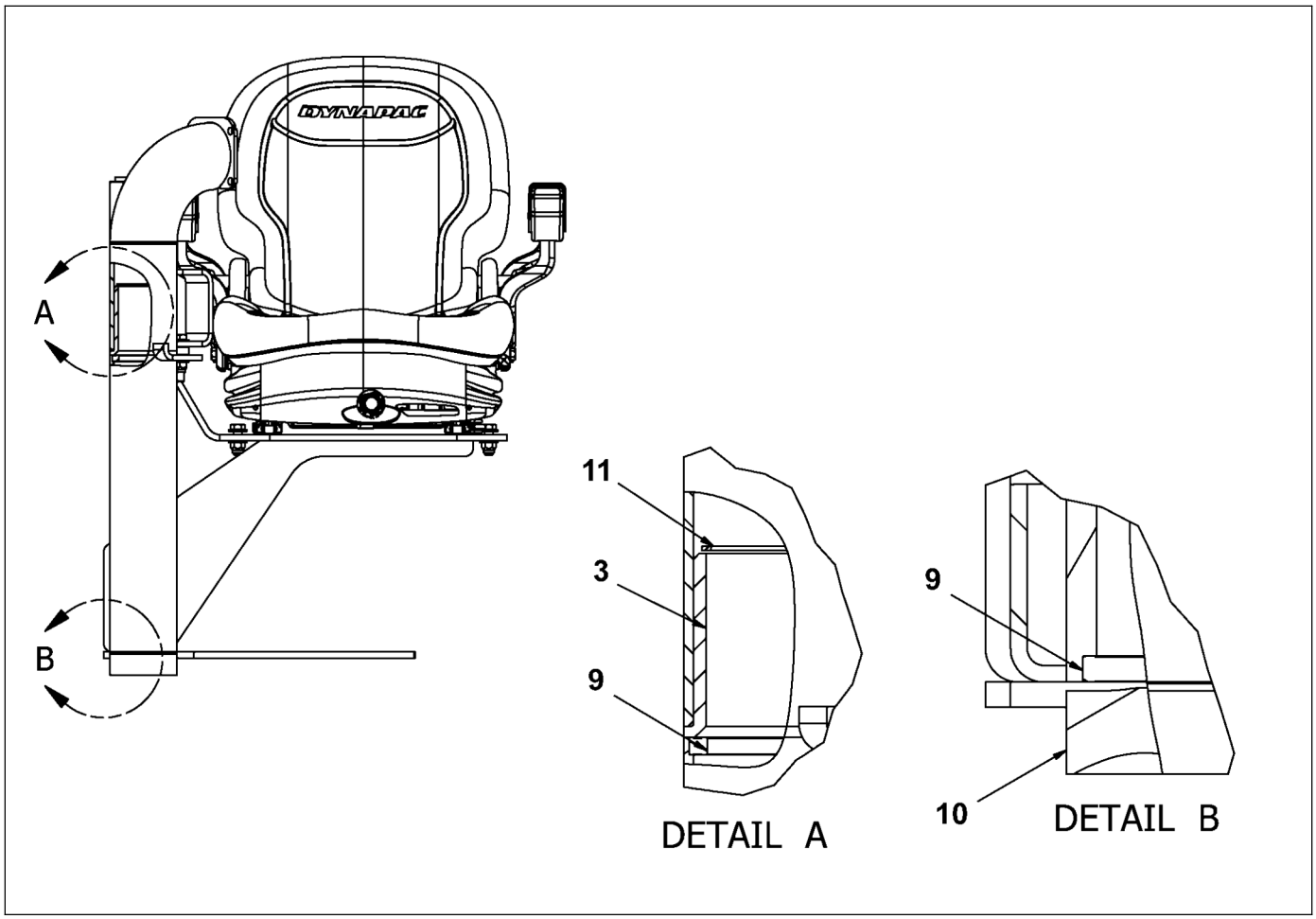

D717113500
Operator station, right

Item	Part Number	Quantity	Description
1	D717113009	1	Swing arm
2	4812250003	1	Seat
3	4812222124	1	Swing arm spacer
6	D717113501	1	Swing station frame
7	D717113040	1	Knob, umbrella clamp
9	D717113047	2	Bearing, operator swing arm
10	4812200214	1	Lower bearing stop
11	D717113048	1	Snap ring, operator station
12	4700904229	4	Washer, #8
13	4700586003	4	Nut, M8
16	D717801086	6	Flat washer, 0.5"
17	D717800736	2	Screw, 1/2"
18	D717800862	3	Lock nut, 1/2"
19	4700343775	2	Wire
20	D717800708	1	Screw, 1/2"
21	4812222126	1	Spacer holder
	D717904500	1	Umbrella

Please check Table of Contents for use of this assembly

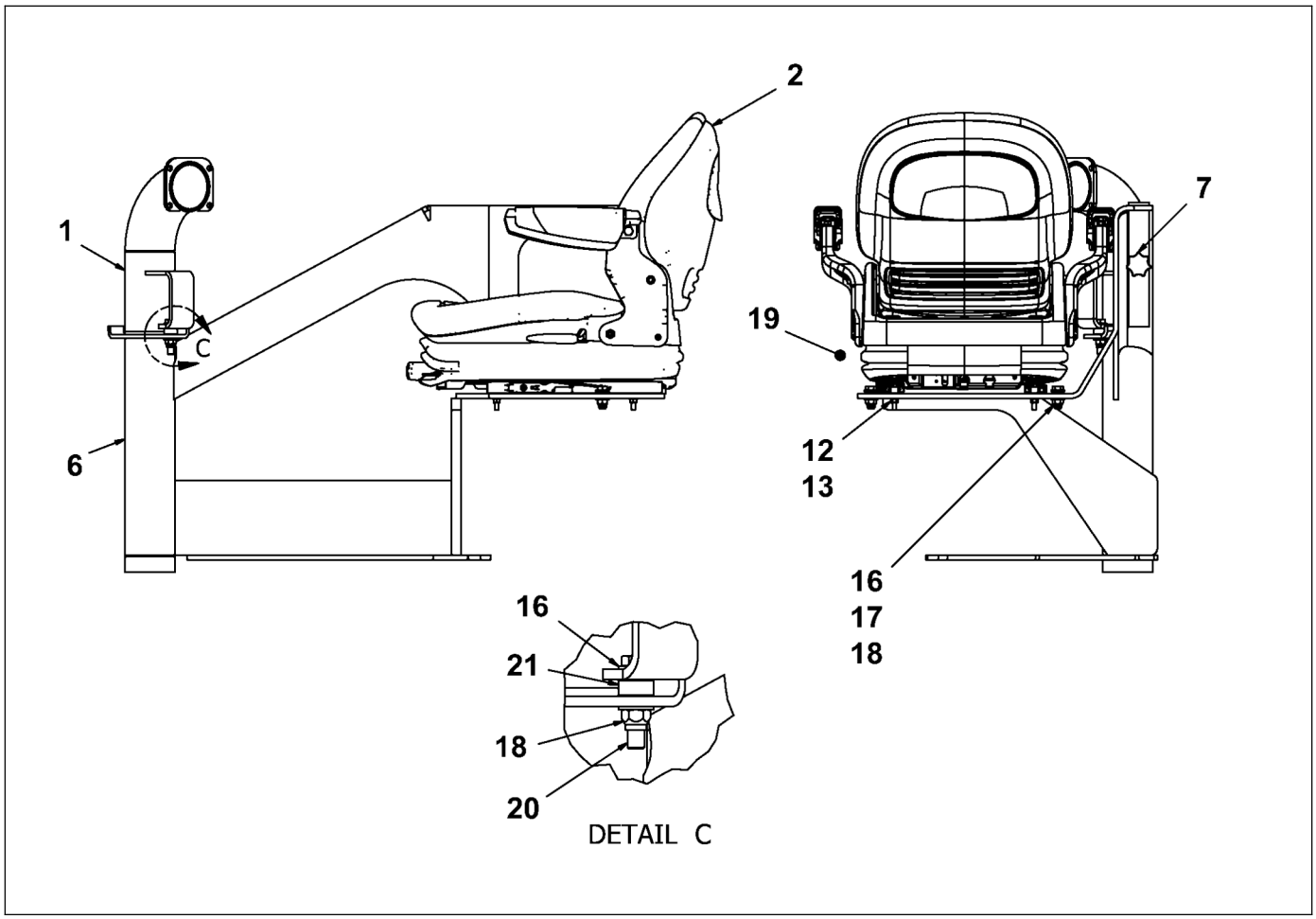

D717113500
Operator station, right

Item	Part Number	Quantity	Description
1	D717113009	1	Swing arm
2	4812250003	1	Seat
3	4812222124	1	Swing arm spacer
6	D717113501	1	Swing station frame
7	D717113040	1	Knob, umbrella clamp
9	D717113047	2	Bearing, operator swing arm
10	4812200214	1	Lower bearing stop
11	D717113048	1	Snap ring, operator station
12	4700904229	4	Washer, #8
13	4700586003	4	Nut, M8
16	D717801086	6	Flat washer, 0.5"
17	D717800736	2	Screw, 1/2"
18	D717800862	3	Lock nut, 1/2"
19	4700343775	2	Wire
20	D717800708	1	Screw, 1/2"
21	4812222126	1	Spacer holder
	D717904500	1	Umbrella

Please check Table of Contents for use of this assembly

D717904500
Umbrella

Item	Part Number	Quantity	Description
1	4812200196	1	Umbrella

Please check Table of Contents for use of this assembly

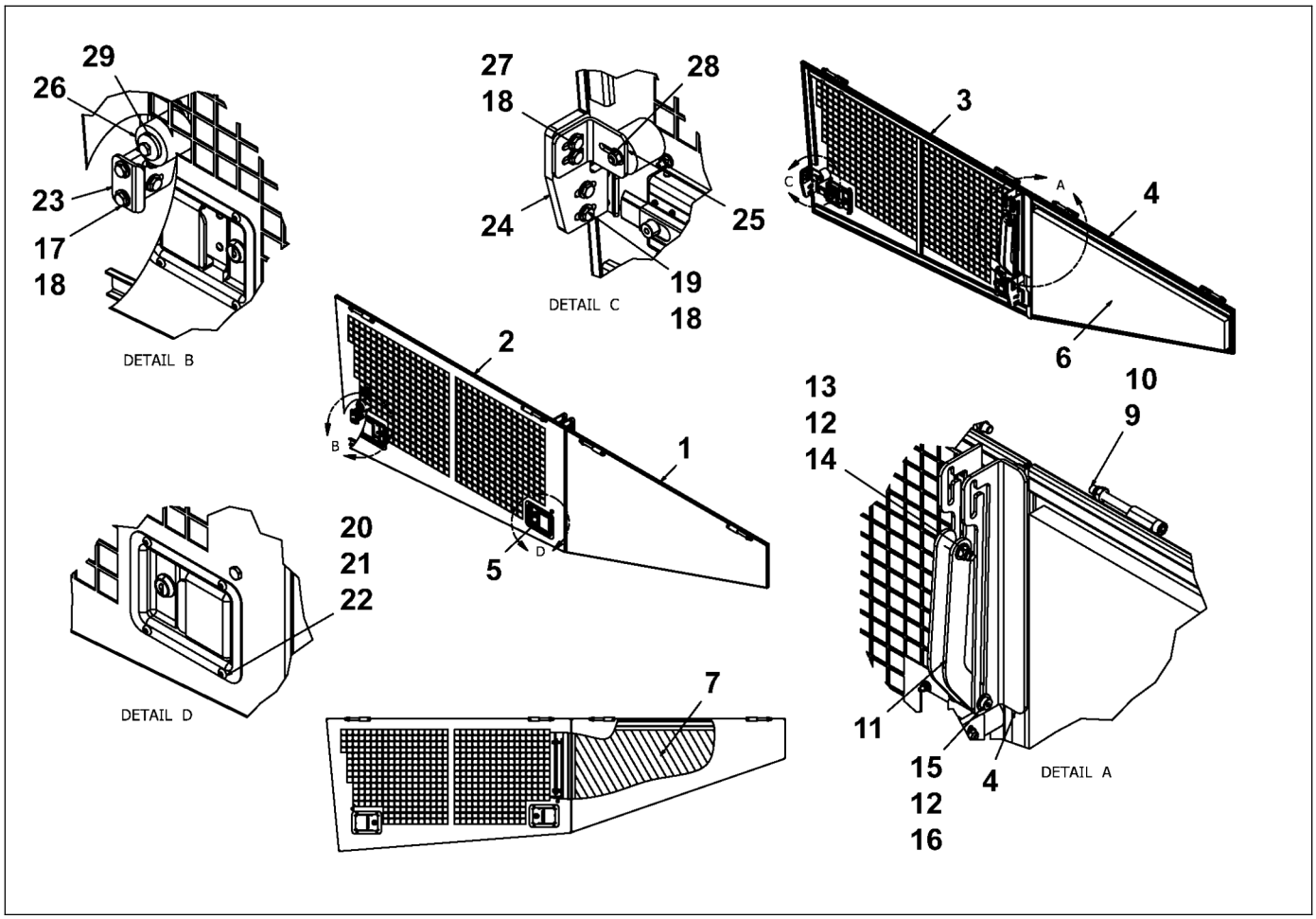

D717114000
Side moulding

Item	Part Number	Quantity	Description
1	D717115000	1	Left side
2	D717114500	1	Side panel, left
3	D717114001	1	Side panel, right
4	D717112501	1	Side panel, rear right
5	D717111535	4	Paddle latch
6	D717111552	1	Insulation pad, left door
7	D717111567	1	Insulation pad, left door
8	D717110010	4	Latch, side door
9	D717800820	8	Lock nut, M10
10	D717111580	8	Screw, M10
11	4812222048	4	Plate, door stop
12	D717801044	8	Narrow washer, 0.38"
13	D717800834	2	Lock nut, 3/8"
14	D717800589	2	Screw, 3/8"
15	D717115003	4	Shoulder bolt, 3/8"
16	D717800792	4	Nut, 3/8"
17	D717801604	8	Screw, 1/4"
18	D717801058	36	Narrow flat washer, 0.25"

Please check Table of Contents for use of this assembly

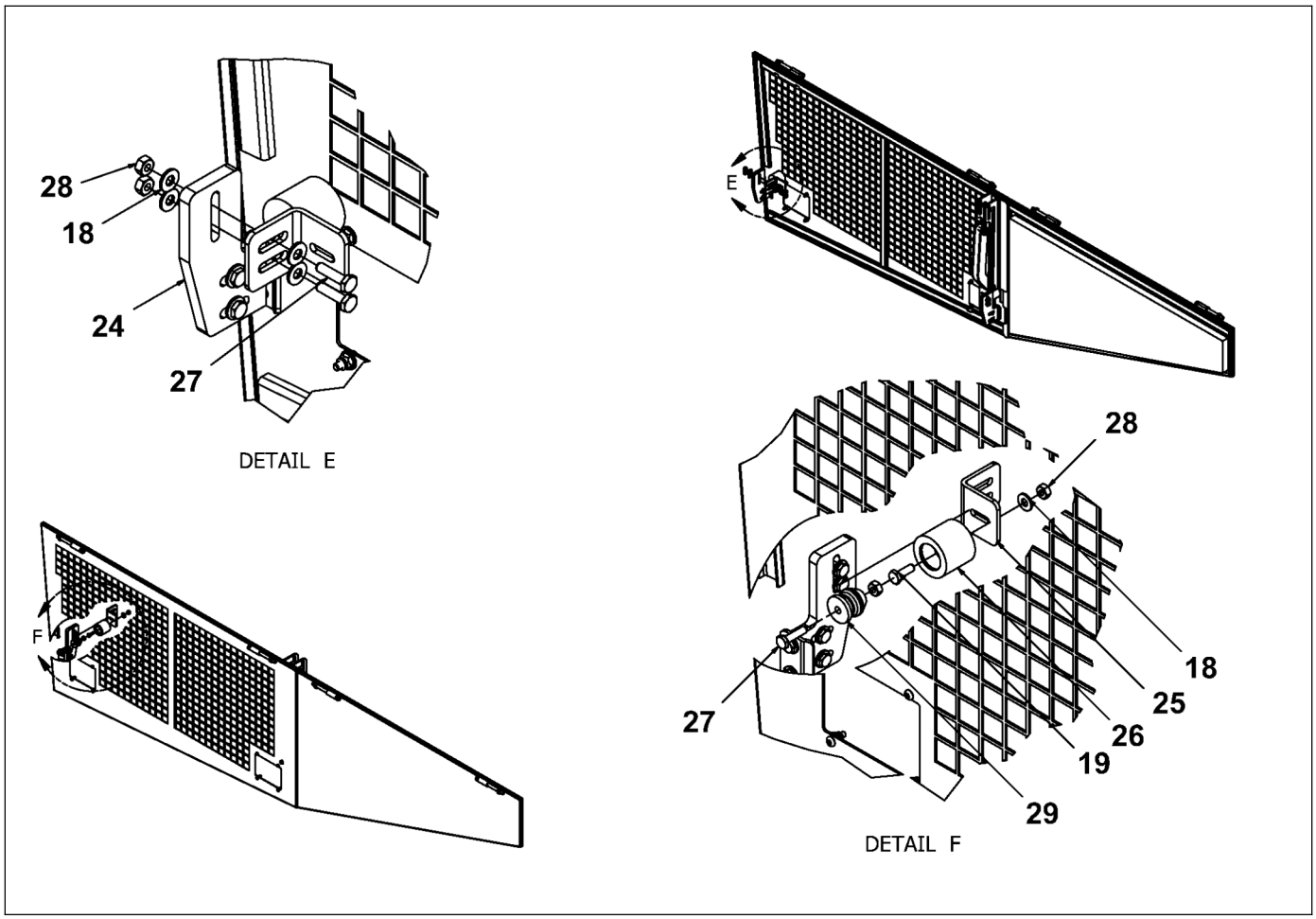

D717114000
Side moulding

Item	Part Number	Quantity	Description
19	D717800687	12	Screw, 1/4"
20	D717801002	16	Hex nut, M10
21	D717801142	16	Washer, 10
22	D717800883	16	Lock nut, M10
23	D717110016	4	Catch
24	4812221332	4	Latch plate
25	4812221333	4	Rubber door latch
26	4812221389	4	Door latch socket
27	D717800680	12	Screw, 1/4"
28	D717801849	16	Hex nut, 1/4"
29	4812221388	4	Door latch plunger

Please check Table of Contents for use of this assembly

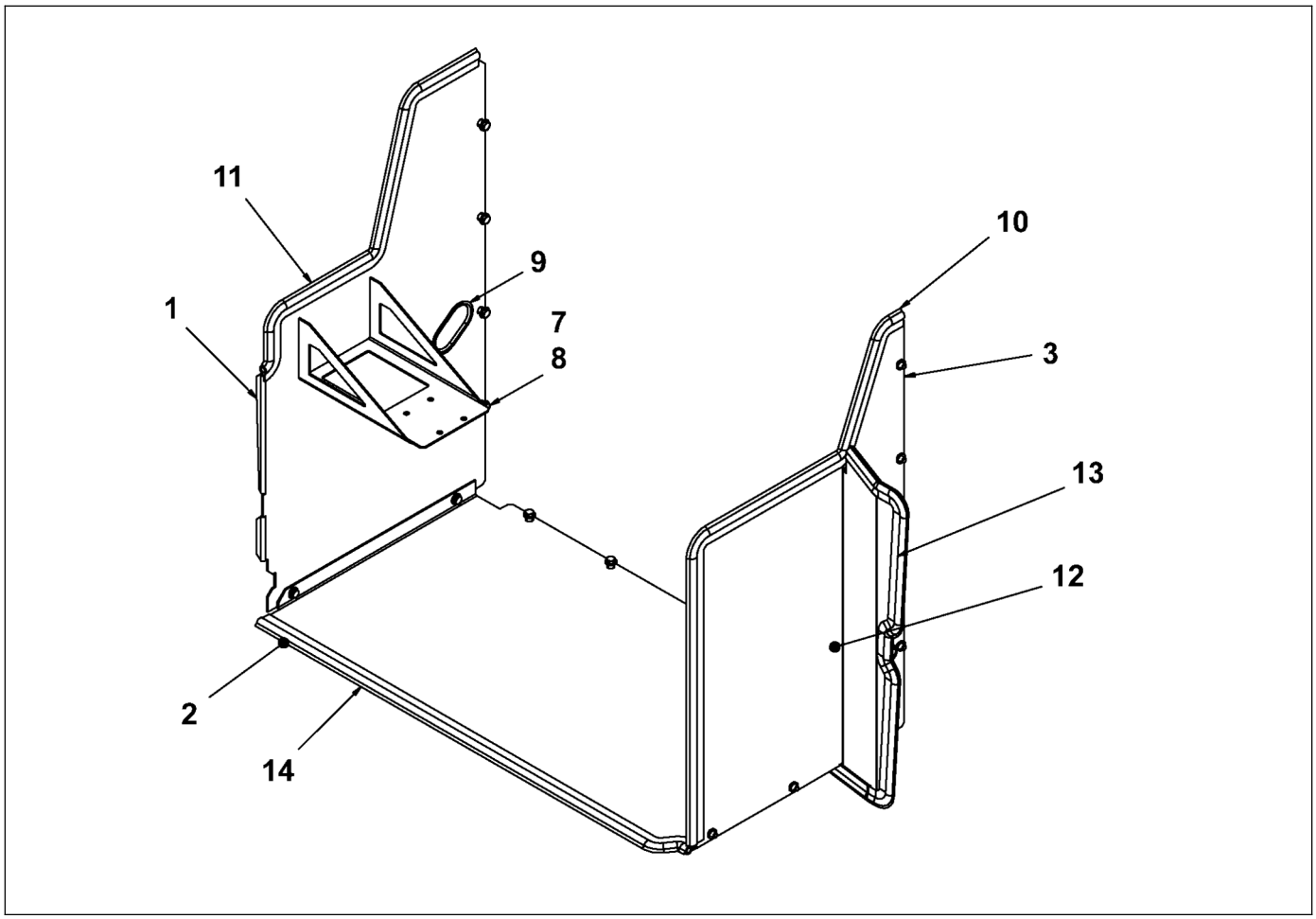

D717085048
Assembly, radiator shroud

Item	Part Number	Quantity	Description
1	D717085068	1	Shroud left
2	D717085070	1	Shroud center
3	D717085072	1	Shroud right
7	D717800617	20	Screw, 3/8"
8	D717801044	20	Narrow washer, 0.38"
9	D717085066	1	Edge trim, shroud hole
10	D717085081	1	Edge trim, shroud front
11	D717085082	1	Edge trim, shroud rear
12	D717085079	1	Seal, cooler front side
13	D717085080	1	Edge trim, front seal
14	D717085089	1	Edge trim, shroud middle

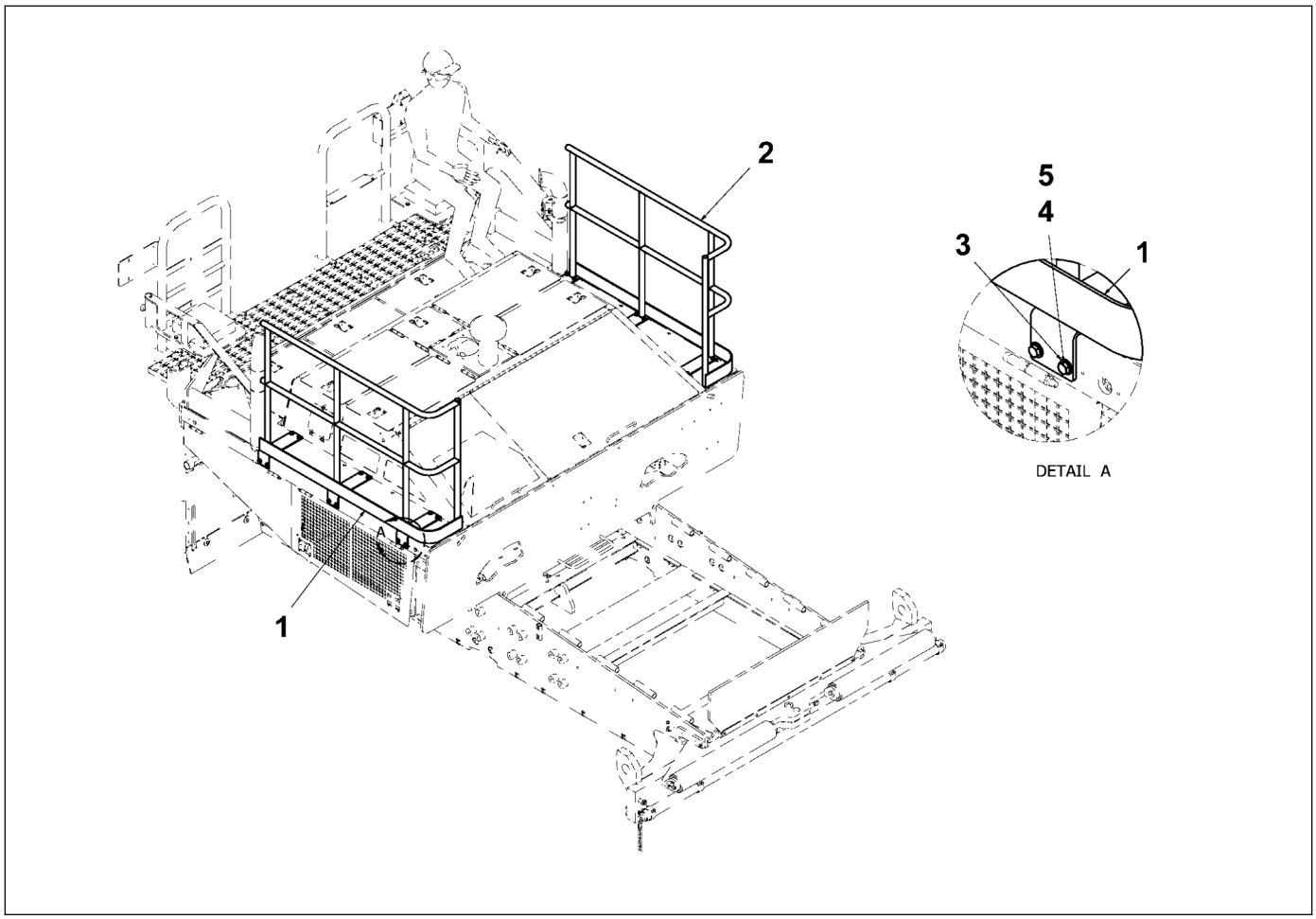

4812221633
Hand rail

Item	Part Number	Quantity	Description
1	4812221628	1	Hand rail, right
2	4812221629	1	Hand rail, left
3	D717801086	72	Flat washer, 0.5"
4	D717800736	36	Screw, 1/2"
5	D717801324	36	Nut, 1/2"

Please check Table of Contents for use of this assembly

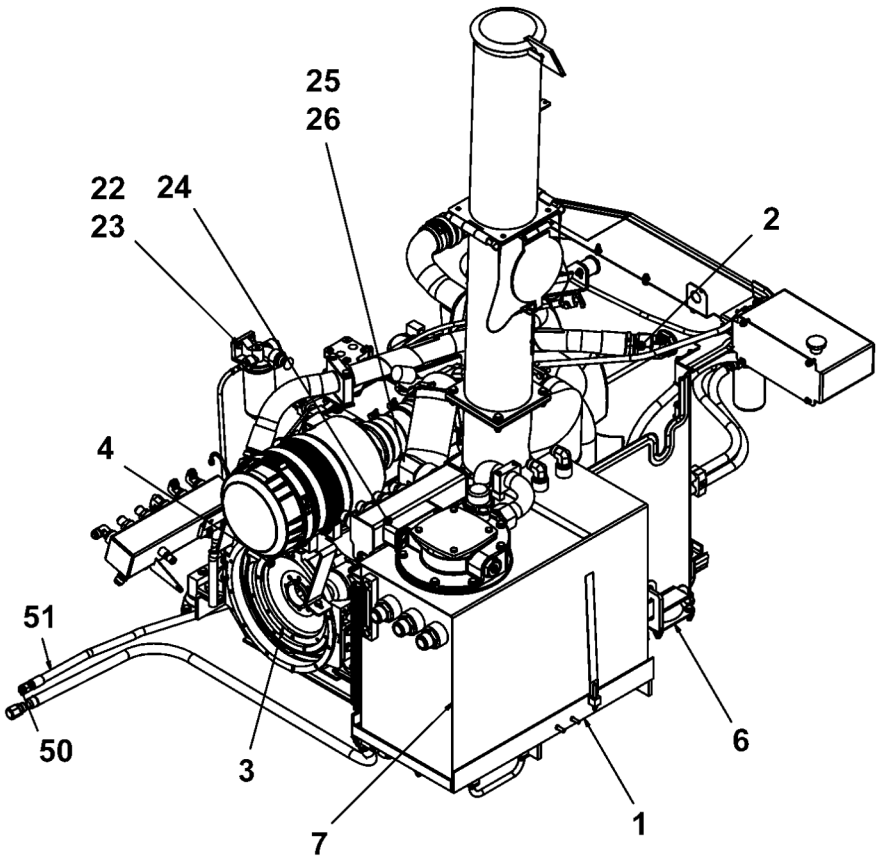

D717080000
Drive

Item	Part Number	Quantity	Description
1	D717083000	1	Bracket assembly, hydraulik tank
2	D717085000	1	Installation, water-oil-air cooler
3	4812200124	1	Engine assembly
4	D717082000	1	Installation, air cleaner
5	D717081500	1	Muffler, 10` drive complete
6	D717081000	1	Engine frame
7	D717084500	1	Hydraulic tank
8	D717080002	1	Strap, loop
10	D717080006	1	Clamp, twin stauff
11	D717801107	4	Washer, 8mm
12	D717800442	4	Screw, M8
13	D717801051	1	Narrow washer, 0.313"
14	D717800827	1	Lock nut, 5/16"
15	D717800540	1	Screw, 5/16"
16	D717801128	1	Washer, 12mm
17	D717800477	1	Screw, M12
18	D717801058	2	Narrow flat washer, 0.25"
19	D717800785	1	Nyloc nut, 1/4"

Please check Table of Contents for use of this assembly

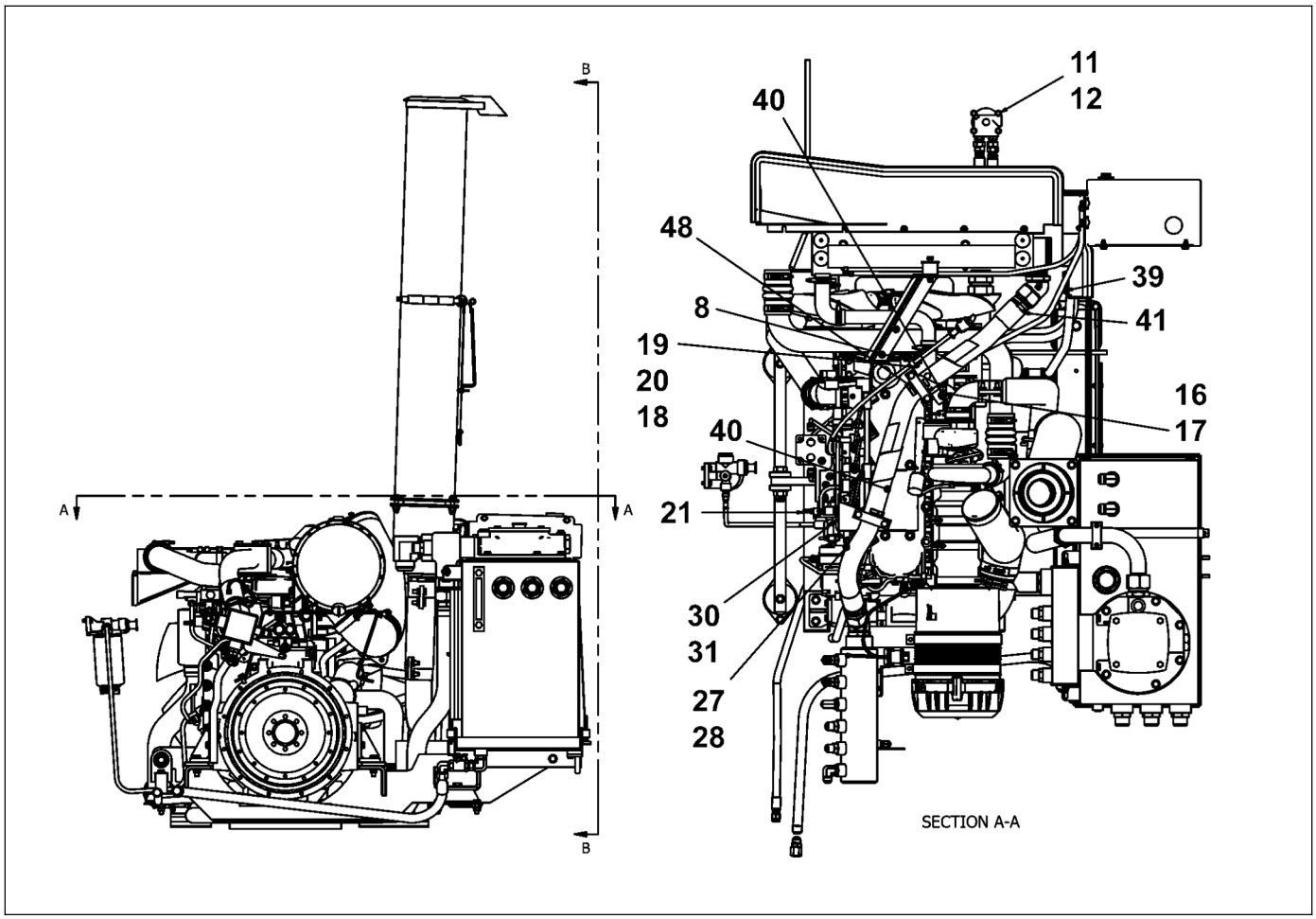

D717080000
Drive

Item	Part Number	Quantity	Description
20	D717800680	1	Screw, 1/4"
21	D717083532	1	Adapter
22	D717801044	10	Narrow washer, 0.38"
23	D717800610	6	Screw, 3/8"
24	D717080007	1	Shield
25	D717800806	4	Lock washer, 10
26	D717800498	4	Screw, M10
27	D717080011	1	Clamp
28	D717080008	1	Engine hose support
30	D717801135	2	Washer, 10mm
31	D717800505	2	Screw, M10
32	D717080013	1	Panel, engine sealing
33	D717080014	1	Panel, surge gap
34	D717080015	1	Edge trim, engine rear
35	D717080017	1	Edge trim, second engine rear
36	D717080016	1	Edge trim, panel hole
37	D717080018	1	Edge trim, fill hose hole
38	D717080019	1	Edge trim, oil hose hole

Please check Table of Contents for use of this assembly

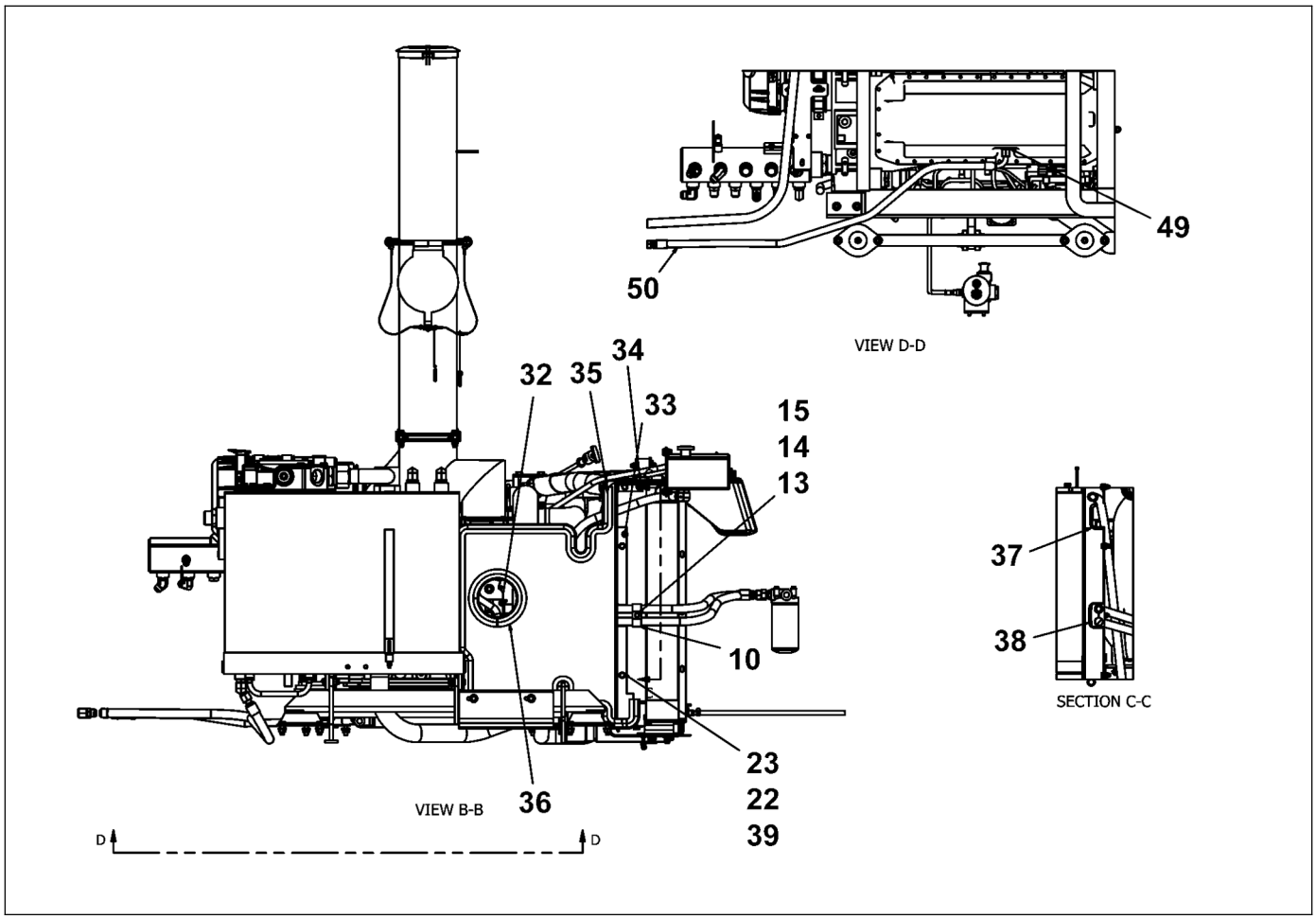

D717080000
Drive

Item	Part Number	Quantity	Description
39	D717800834	4	Lock nut, 3/8"
40	D717080021	2	Woven return hose wrap
41	D717080022	4	Clamp, 2.5"
48	4812220193	1	Clamp assembly, case drain
49	D717801905	1	Adapter, M10-M22
50	D717801877	1	Plug, 10
51	4812200297	1	Hose assembly, #134, 10

Please check Table of Contents for use of this assembly

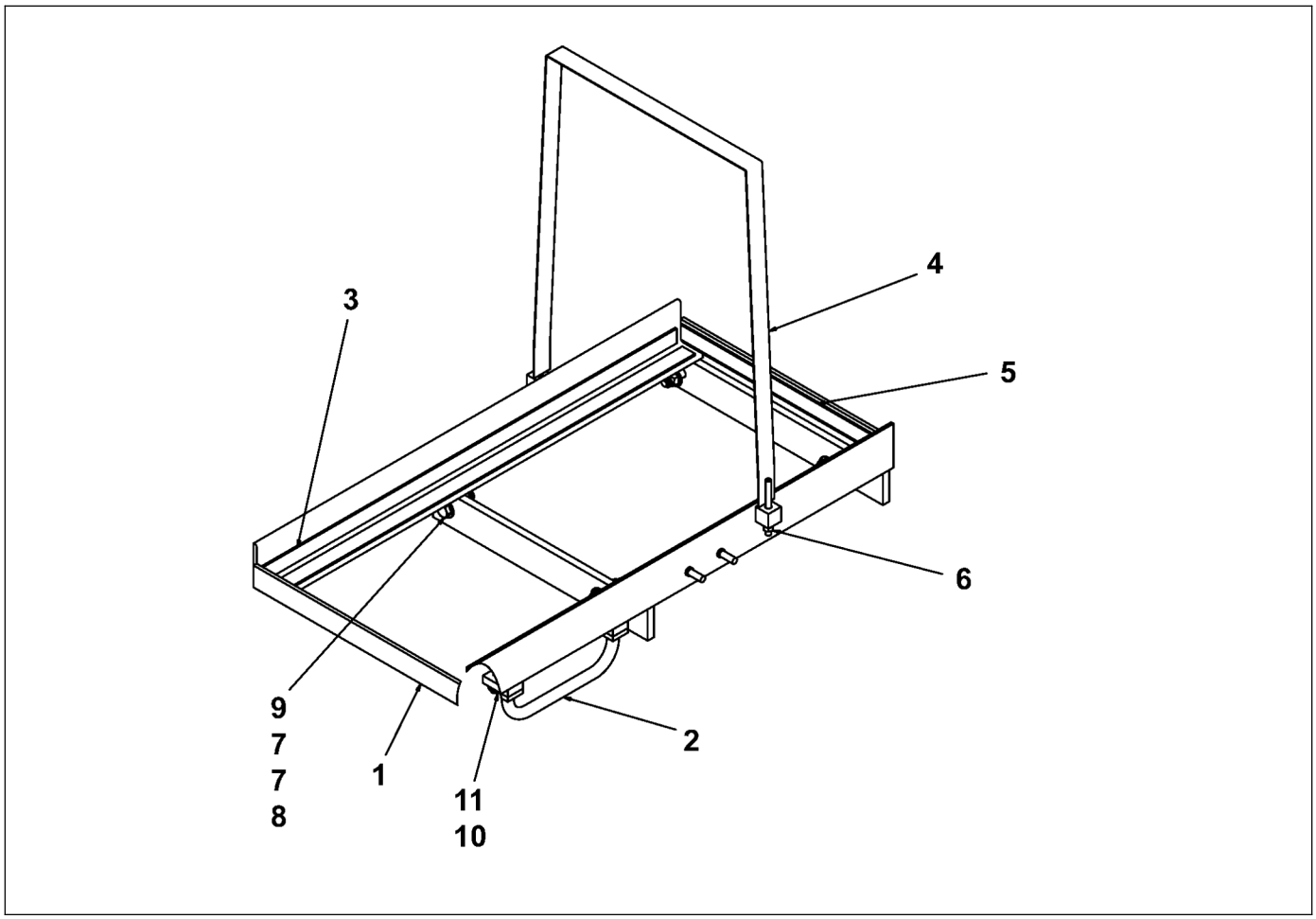

D717083000
Bracket assembly, hydraulik tank

Item	Part Number	Quantity	Description
1	D717083001	1	Hydraulic tank bracket
2	D717083004	1	Hose holder small
3	D717083016	4	Pad, tank, long
4	D717083003	1	Tension strap
5	D717083017	2	Pad, tank, short
6	D717801023	4	Hex nut, 5/16"
7	D717801086	8	Flat washer, 0.5"
8	D717800862	4	Lock nut, 1/2"
9	D717800715	4	Screw, 1/2"
10	D717801044	2	Narrow washer, 0.38"
11	D717800617	2	Screw, 3/8"
12	D717801464	4	Hex nut, 5/16"

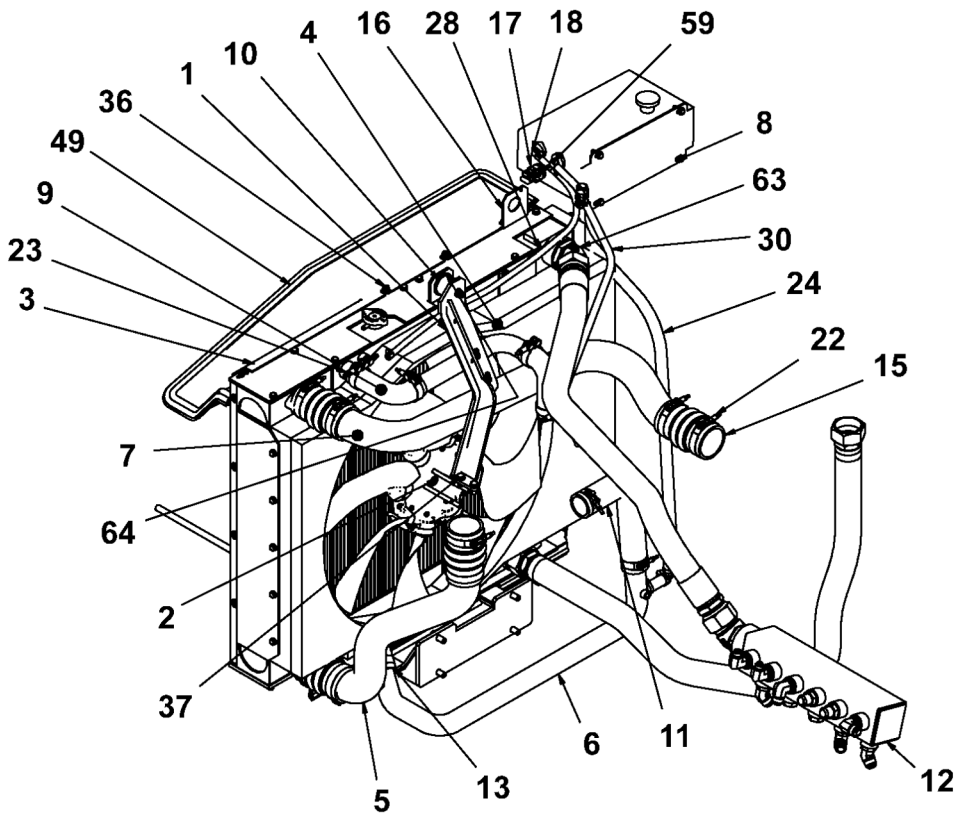

D717085000
Installation, water-oil-air cooler

Item	Part Number	Quantity	Description
1	D717085011	1	Bracket, cooler upper
2	D717085003	1	Fan, cooler
3	D717085004	1	Cooler, water-oil-air
4	D717085020	1	Pipe, engine to cooler
5	D717085021	1	Pipe, air charge return
6	D717085022	1	Pipe, cooler to engine
7	D717085023	1	Pipe, air charge cooler
8	D717085024	1	Tank, coolant surge
9	D717085040	2	Elbow, 1 3/4"
10	D717085002	5	Isolator, cooler
11	D717085044	1	Elbow, 2"
12	D717085027	1	Case drain manifold
13	D717085046	1	Elbow, 2"
14	D717801548	1	Adapter, 32-32
15	D717085041	4	Hose, cac hump
16	D717085050	1	Top radiator shroud
17	D717085054	1	Sensor, coolant level
18	D717802052	2	Elbow, 04-04

Please check Table of Contents for use of this assembly

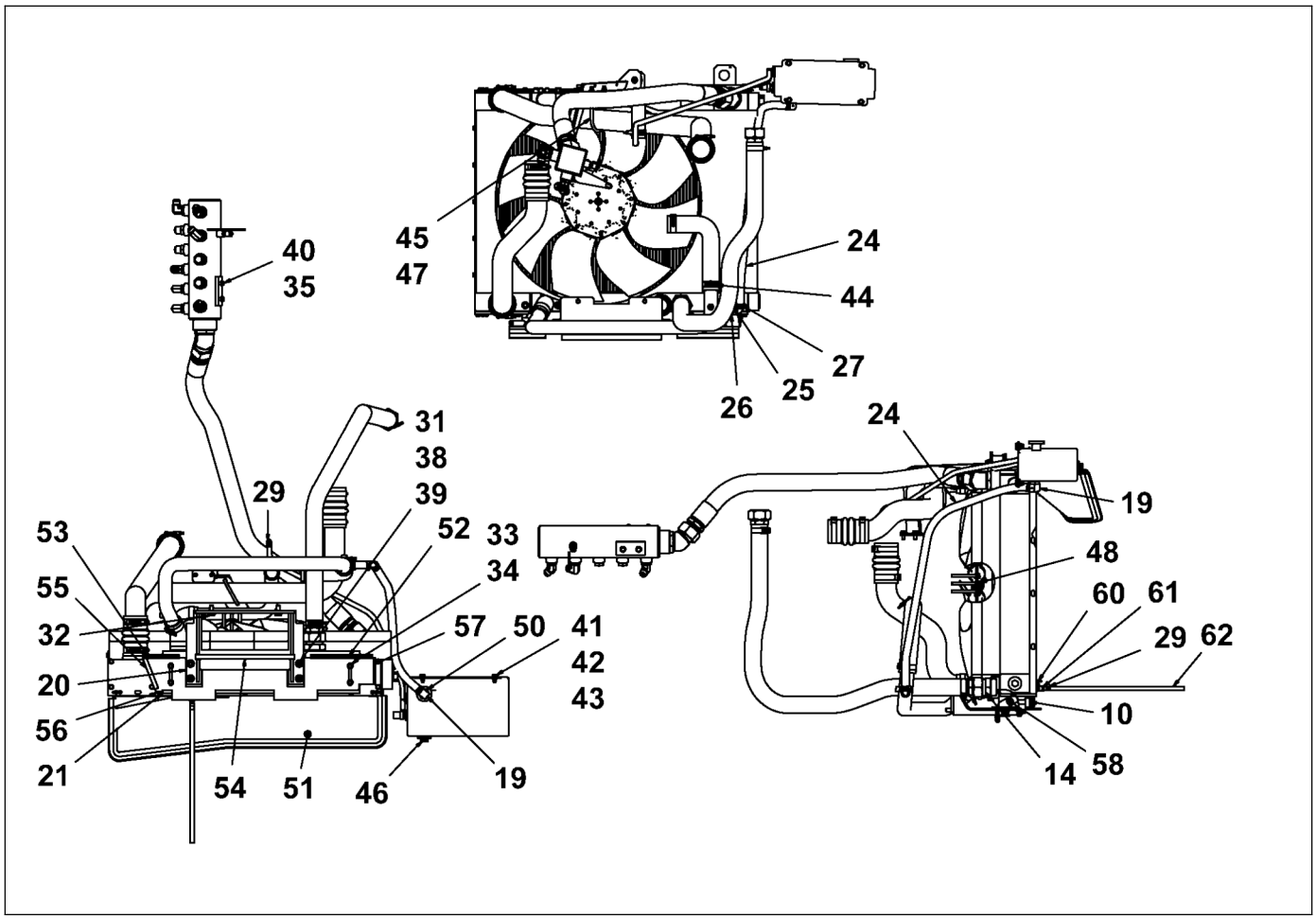

D717085000
Installation, water-oil-air cooler

Item	Part Number	Quantity	Description
19	D717802017	1	Elbow, 12-12
20	D717085025	1	Radiator mount
21	D717085019	1	Angle, radiator mount
22	4812220118	8	Hose clamp, 3 1/2"
23	D717085052	4	Clamp, hose
24	D717085057	1	Hose, fill, surge tank to water pump
25	D717085063	1	Hose barb elbow
26	D717085062	1	Hose, fill, short extension
27	D717085061	4	Clamp
28	D717085058	1	Hose, vent, cooler to surge tank
29	D717085060	5	Clamp
30	D717085059	1	Hose, vent, engine to surge tank
31	D717801086	12	Flat washer, 0.5"
32	D717800743	4	Screw, 1/2"
33	D717801135	16	Washer, 10mm
34	D717800820	5	Lock nut, M10
35	D717801044	10	Narrow washer, 0.38"
36	D717800610	3	Screw, 3/8"

Please check Table of Contents for use of this assembly

DYNAPAC
Part of the Atlas Copco Group

Please see previous page for drawing.

D717085000
Installation, water-oil-air cooler

Item	Part Number	Quantity	Description
37	D717800491	4	Screw, M10
38	D717800862	4	Lock nut, 1/2"
39	D717800736	4	Screw, 1/2"
40	D717800617	2	Screw, 3/8"
41	D717800561	4	Screw, 5/16"
42	D717801051	8	Narrow washer, 0.313"
43	D717800827	4	Lock nut, 5/16"
44	4812220117	6	Hose clamp, 2 3/8"
45	D717085077	1	Ubolt, CAC support
46	D717085078	1	Sight gauge
47	D717800834	5	Lock nut, 3/8"
48	D717800512	4	Screw, M10
49	D717085083	1	Edge trim
50	D717802010	1	Reducer bushing, 16-12
51	D717085084	1	Seal
52	D717085096	1	Edge trim support, left
53	D717085098	1	Edge trim support, right
54	D717085097	1	Edge trim support, middle

Please check Table of Contents for use of this assembly

DYNAPAC
Part of the Atlas Copco Group

Please see previous page for drawing.

D717085000
Installation, water-oil-air cooler

Item	Part Number	Quantity	Description
55	D717085099	1	Edge trim support, right end
56	D717085100	1	Edge trim support, right top
57	D717085101	1	Edge trim support, left end
58	D717085075	1	Insulation pad, cooler support
59	D717801954	1	Elbow, 1/4"-3/8"
60	D717085102	1	Needle valve
61	D717802045	1	Hose barb, 06-04
62	D717085094	1	Drain hose
63	D717801555	1	Elbow, 32-32
64	4812220250	1	Washer
65	4812200120	8	Plug, 1/4"
68	4812220250	1	Washer

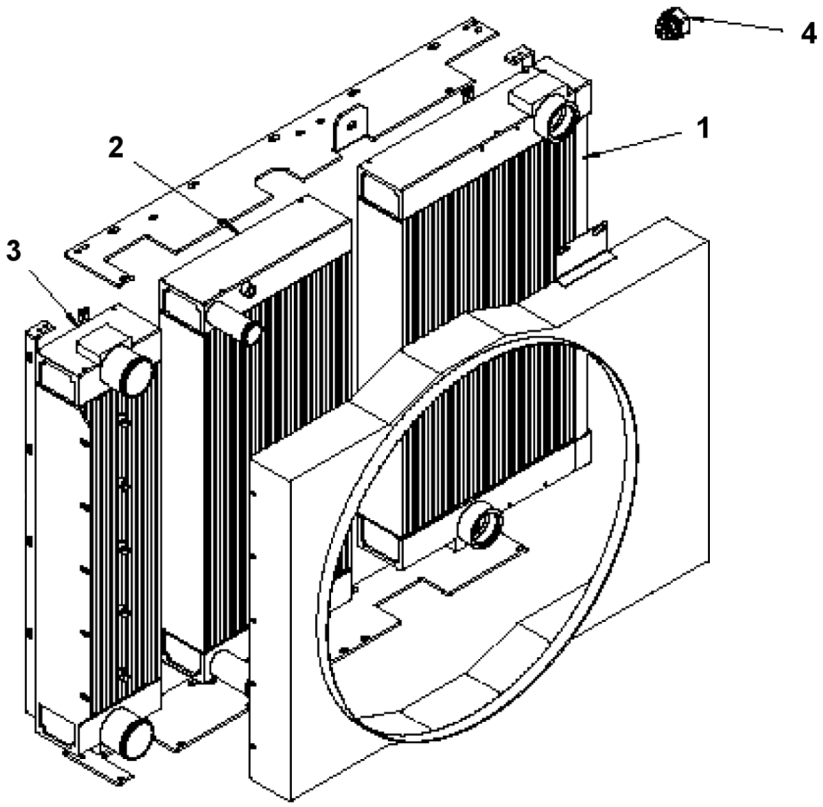

D717085004
Cooler, water-oil-air

Item	Part Number	Quantity	Description
1	D717951646	1	Cooler, oil with bypass
2	D717951653	1	Radiator
3	D717951660	1	Cooler, charge air
4	D717951667	1	Valve, bypass

Please check Table of Contents for use of this assembly

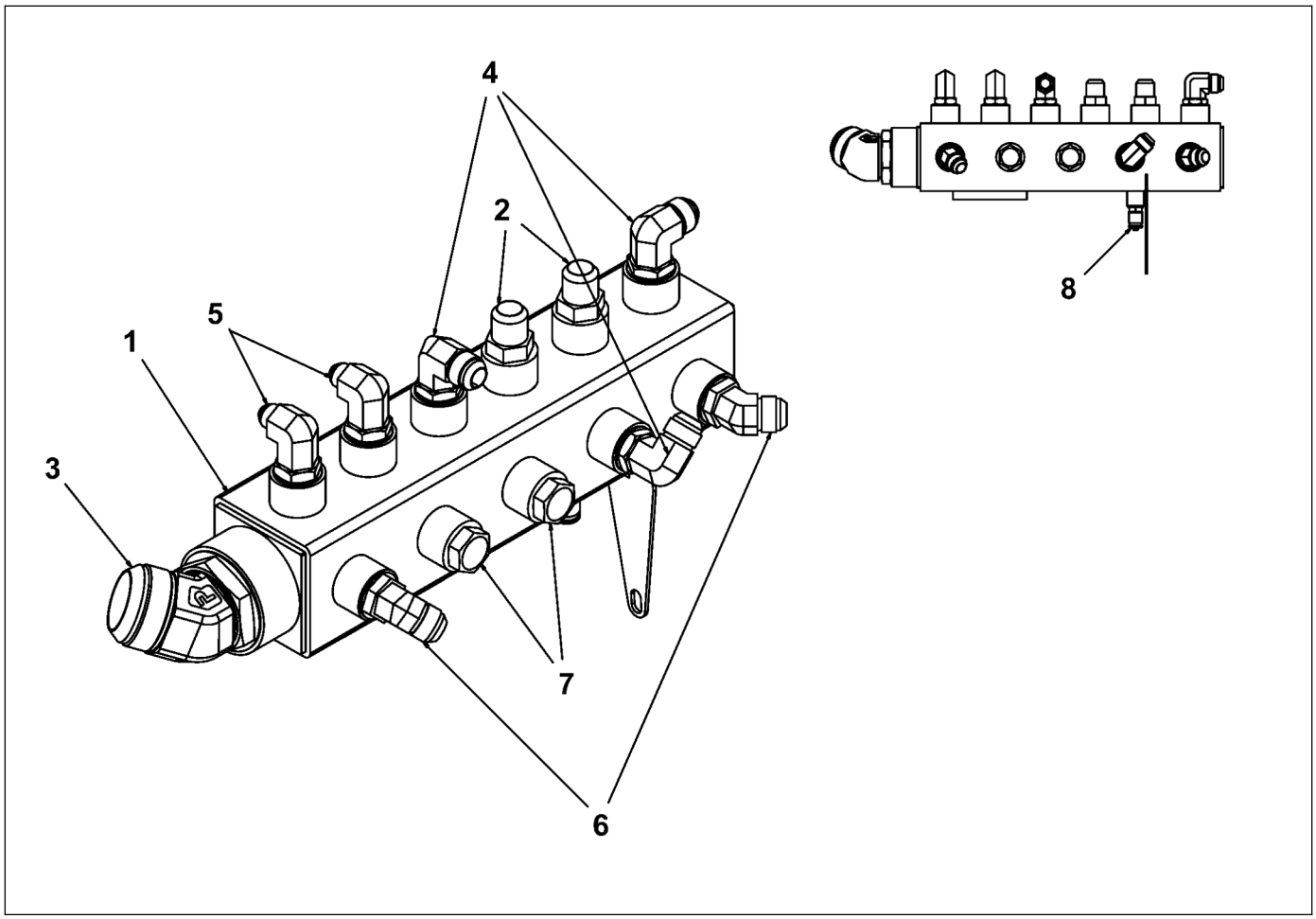

D717085027
Case drain manifold

Item	Part Number	Quantity	Description
1	D717085028	1	Case drain manifold
2	D717800066	2	Adapter, 12-12
3	D717801555	1	Elbow, 32-32
4	D717800085	3	Elbow, 12-12
5	D717800113	2	Elbow, 12-12
6	D717800099	2	Elbow, 12-12, 45 deg
7	D717801933	2	Plug, 06
8	D717090505	1	Test port, male

Please check Table of Contents for use of this assembly

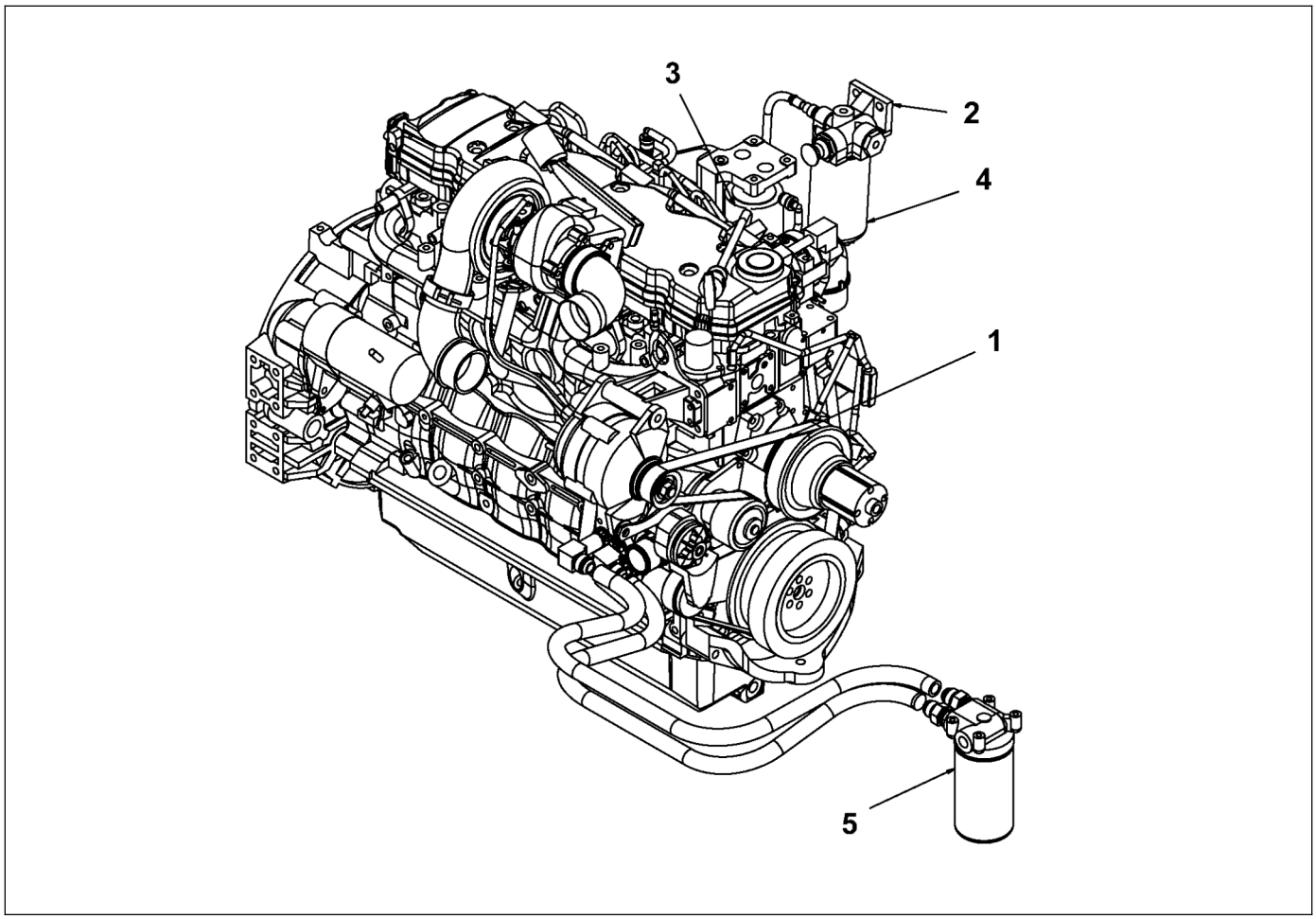

4812200124
Engine assembly

Item	Part Number	Quantity	Description
1	D717950190	1	Belt, v-ribbed
2	D717952437	1	Head, fuel separator
3	D717951975	1	Filter, fuel
4	D717950673	1	Filter, fuel/separator
5	D717950694	1	Filter, oil
6	D717952381	1	Alternator
7	D717952388	1	Motor, starter
8	D717952395	1	Head, oil filter
9	D717952402	1	Tube, fuel supply
10	D717952409	1	Tube, fuel supply
11	D717952416	1	Hose, flexible
12	D717952423	1	Hose, flexible
13	D717952430	1	Tensioner, idler
14	D717952437	1	Head, fuel separator
15	D717952444	1	Hose, flexible
16	D717952451	1	Module, fuel

Please check Table of Contents for use of this assembly

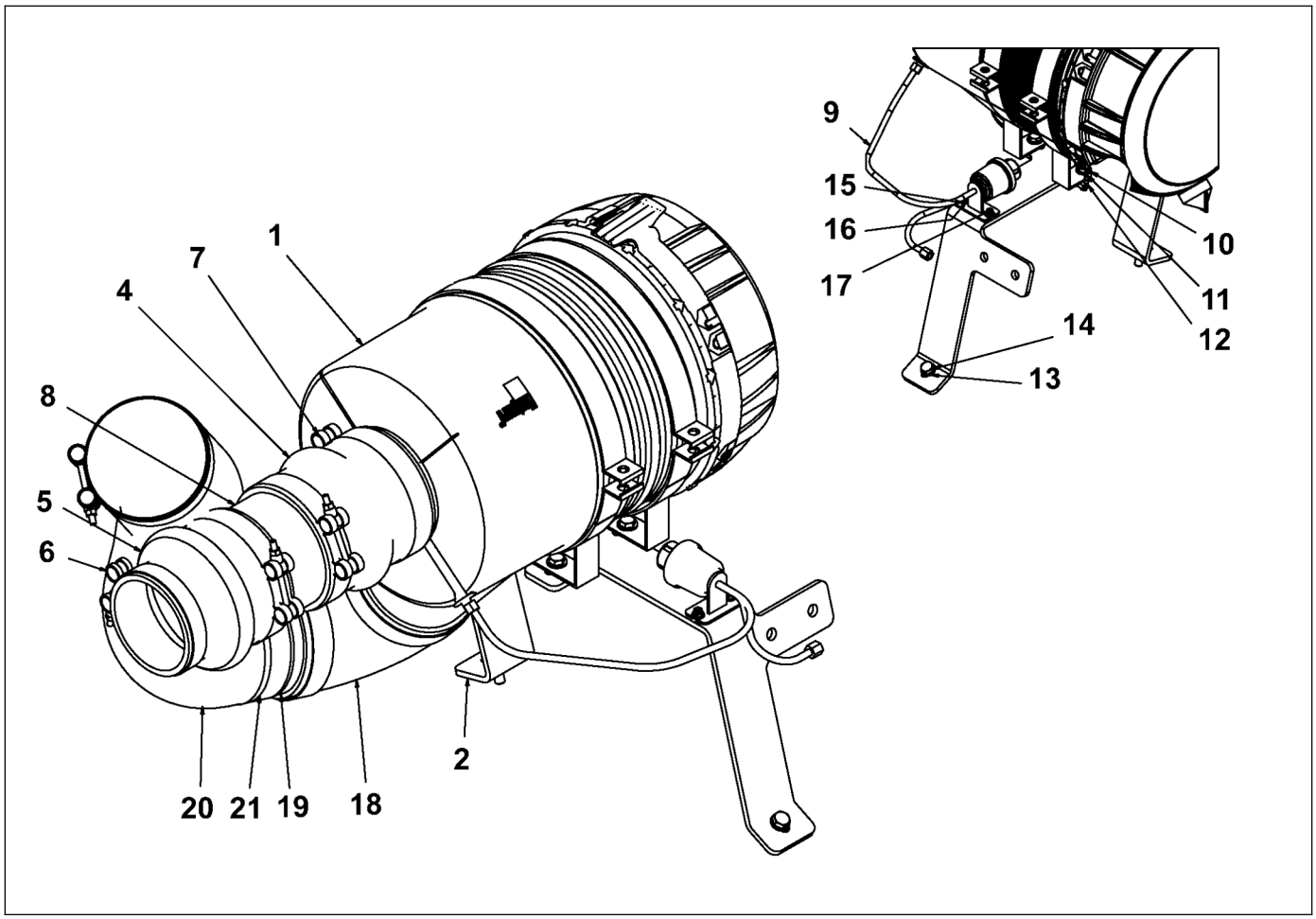

D717082000
Installation, air cleaner

Item	Part Number	Quantity	Description
1	D717082001	1	Air cleaner
2	D717082004	1	Mount, air cleaner
4	D717082006	1	Hose, hump, 5"
5	D717082007	1	Hose, reducing hump, 5"
6	D717082009	1	Clamp, 4 1/2"
7	D717082008	5	Clamp, 5 1/2"
8	D717082011	1	Tube, intake coupling
9	D717082016	1	Kit, restriction indicator remote mount
10	D717801044	8	Narrow washer, 0.38"
11	D717800603	4	Screw, 3/8"
12	D717800834	4	Lock nut, 3/8"
13	D717801135	2	Washer, 10mm
14	D717800491	2	Screw, M10
15	D717801142	4	Washer, 10
16	D717800897	2	Lock nut, M10
17	D717800659	2	Screw, 10-32
18	D717082010	1	Rubber elbow
19	D717082012	1	Tube

Please check Table of Contents for use of this assembly

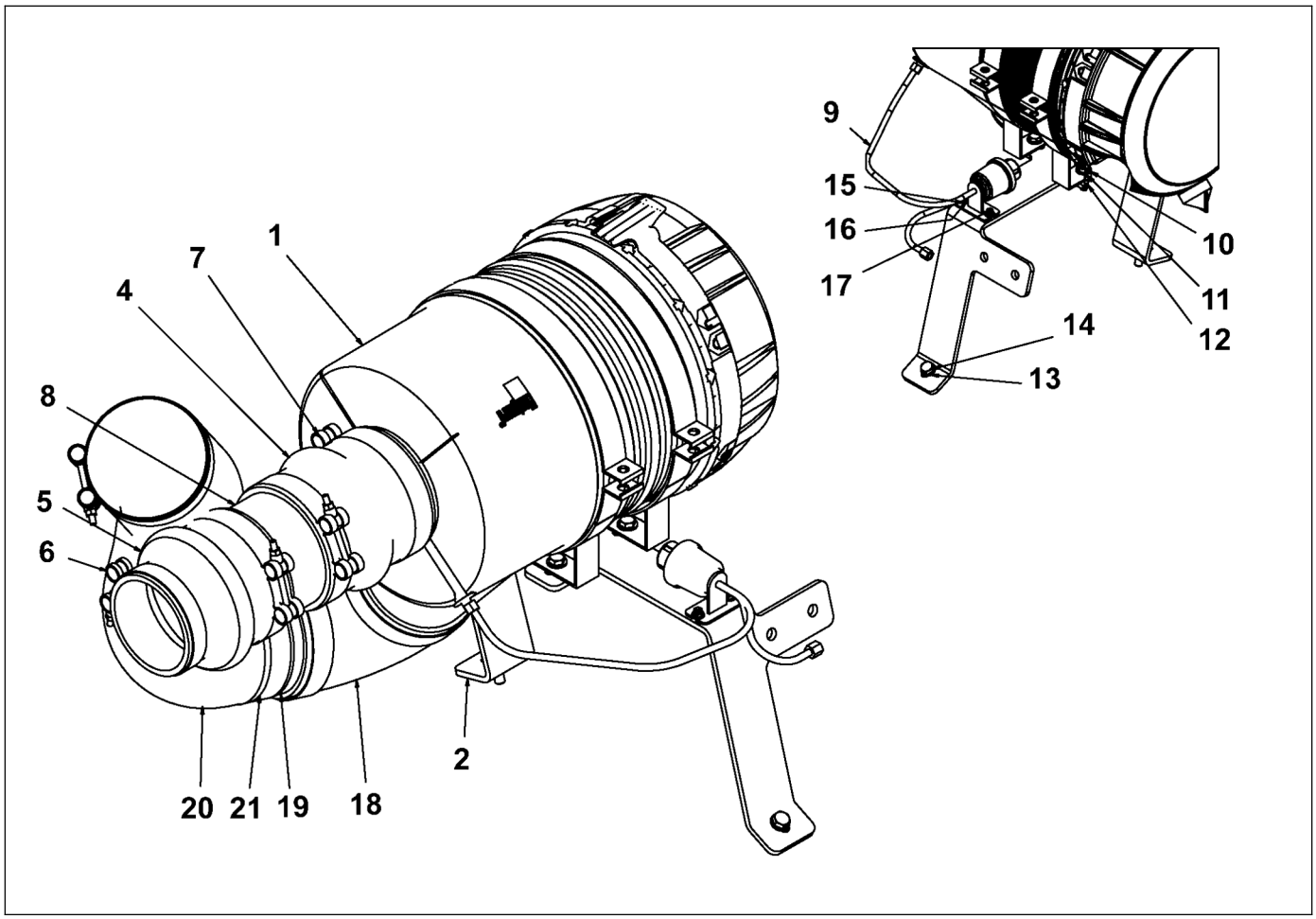

D717082000
Installation, air cleaner

Item	Part Number	Quantity	Description
20	D717082005	1	Duct, suction air
21	D717082013	2	Clamp, 5"
22	D717950659	1	Filter, primary air
23	D717950666	1	Filter, safety air
24	4812200319	2	Air cleaner mounting band
		1	

Please check Table of Contents for use of this assembly

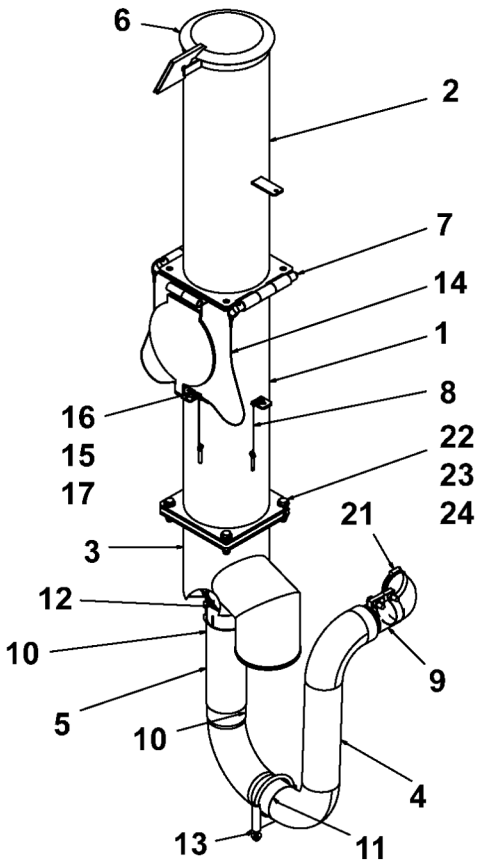

D717081500
Muffler, 10` drive complete

Item	Part Number	Quantity	Description
1	D717081501	1	Muffler, hood mount, bottom
2	4812222251	1	Muffller, hood mount, top
3	D717081511	1	Exhaust
4	D717081512	1	Exhaust pipe
5	D717081513	1	Flex pipe
6	D717081515	1	Exhaust rain cap
7	D717081527	2	Pin, stack hinge
8	D717081528	2	Quick pin with lanyard
9	D717081529	1	Clamping u-bolt
10	D717081531	2	Clamp
11	D717081514	1	Wrap, woven exhaust
12	D717081532	1	Clamp
13	D717081530	1	U-bolt, 4"
14	D717081533	2	Lanyard, hinge pin
15	D717801100	2	Washer, #6
16	D717800974	1	Screw, M6
17	D717801233	1	Nut, M6
21	D717081534	1	Clamp

Please check Table of Contents for use of this assembly

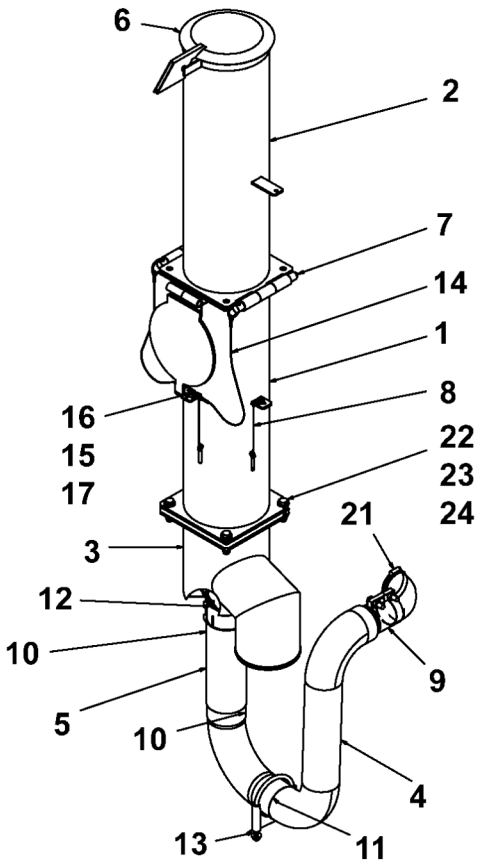

D717081500
Muffler, 10` drive complete

Item	Part Number	Quantity	Description
22	D717800715	4	Screw, 1/2"
23	D717800862	4	Lock nut, 1/2"
24	D717801086	4	Flat washer, 0.5"

Please check Table of Contents for use of this assembly

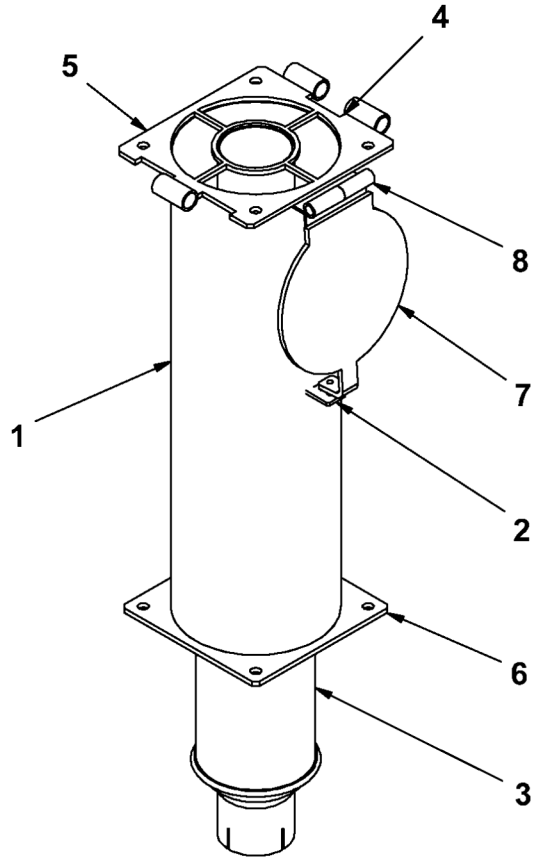

D717081501
Muffler, hood mount, bottom

Item	Part Number	Quantity	Description
1	D717081503	1	Tube, exhaust
2	D717081520	1	Mid rain cap, exhaust
3	D717081521	1	Hinge, exhaust
4	D717081505	2	Tab, exhaust bolt
5	D717081518	1	Plate, exhaust flange
6	D717081507	1	Muffler
7	D717081519	1	Centerer, muffler
8	D717081517	3	Holder, exhaust pin

Please check Table of Contents for use of this assembly

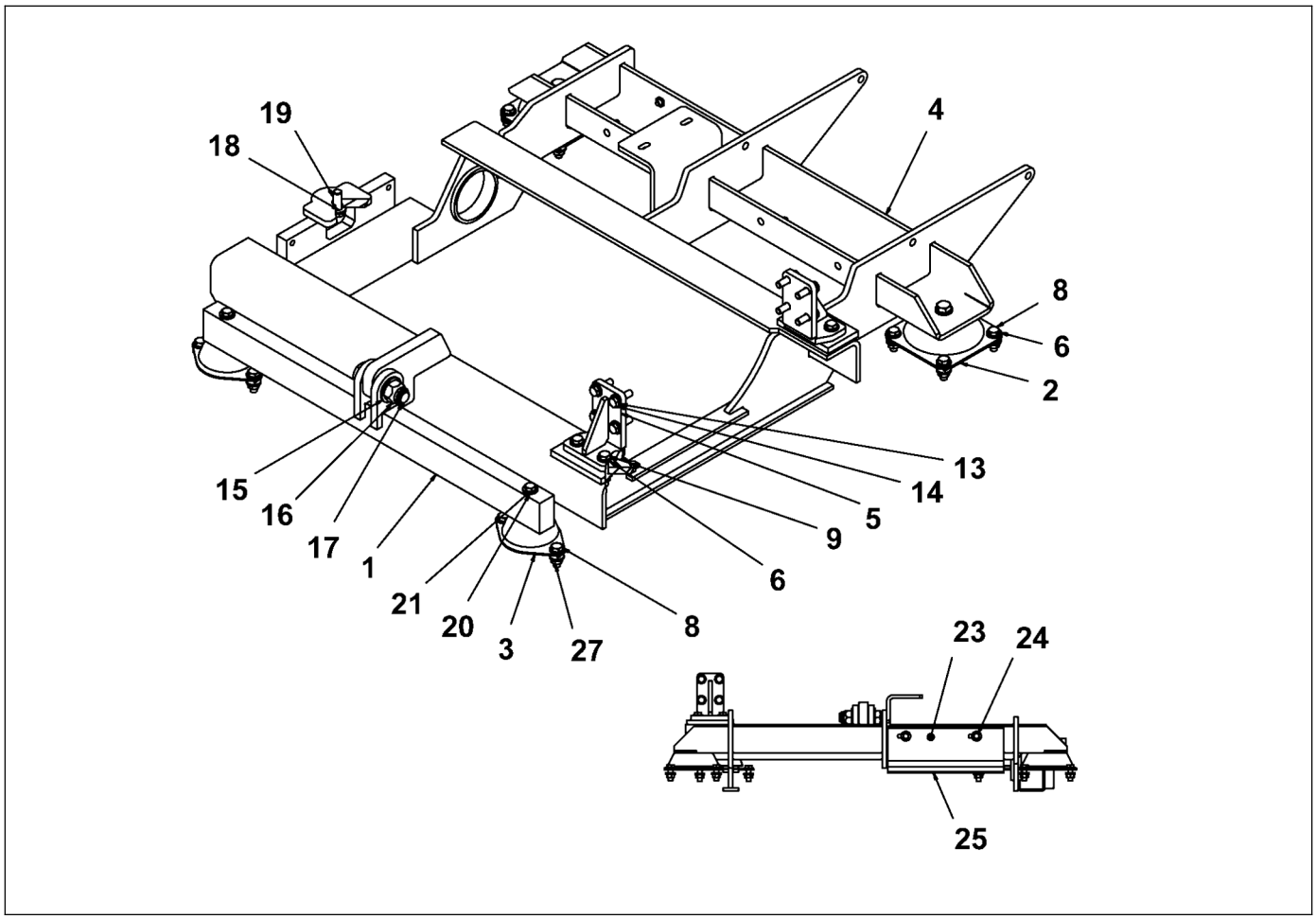

D717081000
Engine frame

Item	Part Number	Quantity	Description
1	D717081014	1	Engine, front mount
2	D717081017	2	Mount, isolation engine frame
3	D717081018	2	Mount, isolation engine frame
4	D717081001	1	Engine frame
5	D717081023	2	Engine mount
6	D717801086	18	Flat washer, 0.5"
7	D717800862	8	Lock nut, 1/2"
8	D717800736	4	Screw, 1/2"
9	D717800708	4	Screw, 1/2"
13	D717801128	8	Washer, 12mm
14	D717800470	8	Screw, M12
15	D717801065	2	Washer, 1"
16	D717800848	1	Lock nut, 1-8
17	D717800652	1	Screw, 1-8
18	D717801114	3	Washer, 16mm
19	D717800456	3	Screw, M16
20	D717801121	2	Washer, 14mm
21	D717800463	2	Screw, M12

Please check Table of Contents for use of this assembly

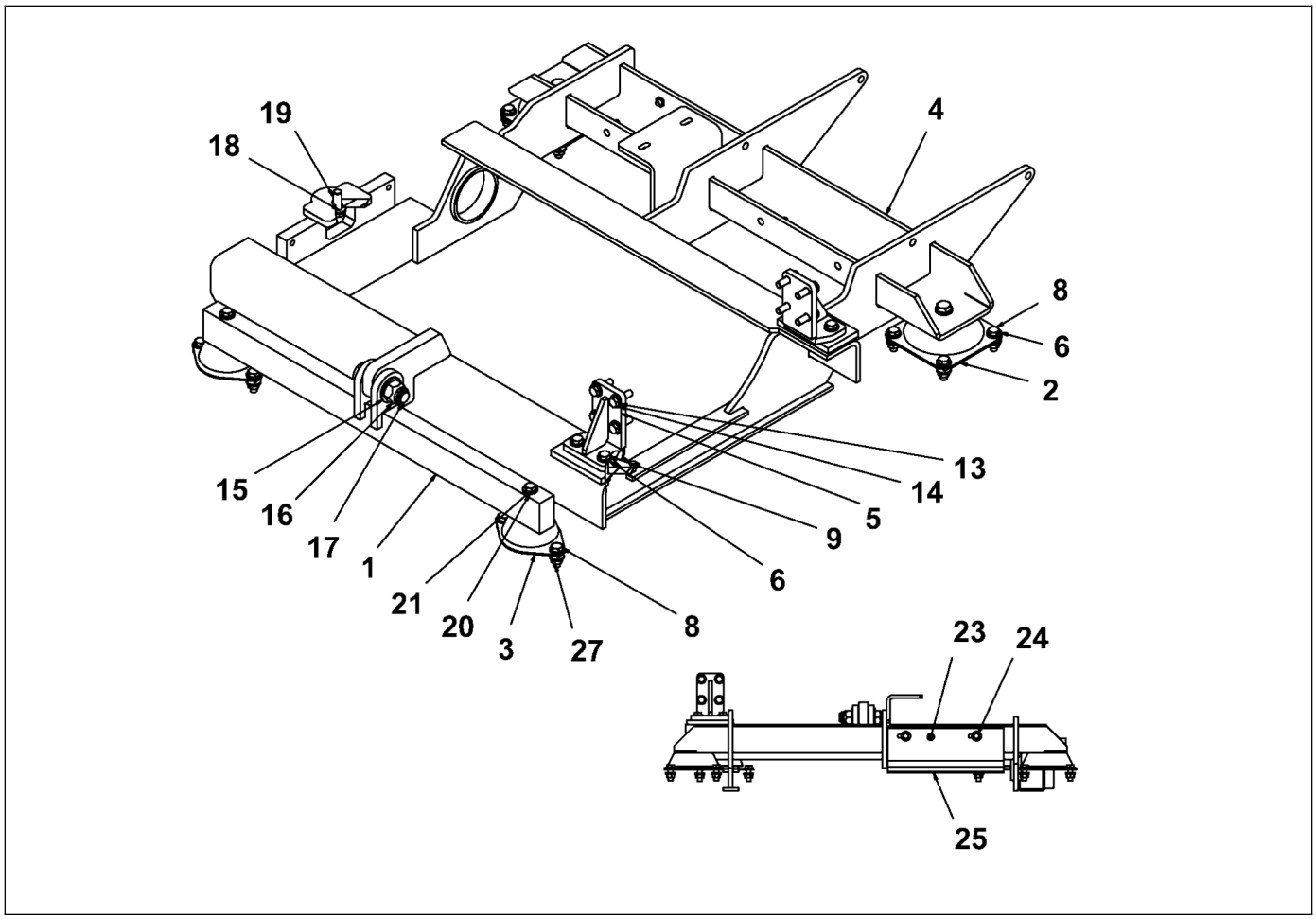

D717081000
Engine frame

Item	Part Number	Quantity	Description
22	D717081032	1	Panel
23	D717081033	1	Panel
24	D717800610	4	Screw, 3/8"
25	D717081034	1	Edge Trim
26	D717081035	1	Edge Trim
27	4812220245	16	Hex flange

Please check Table of Contents for use of this assembly

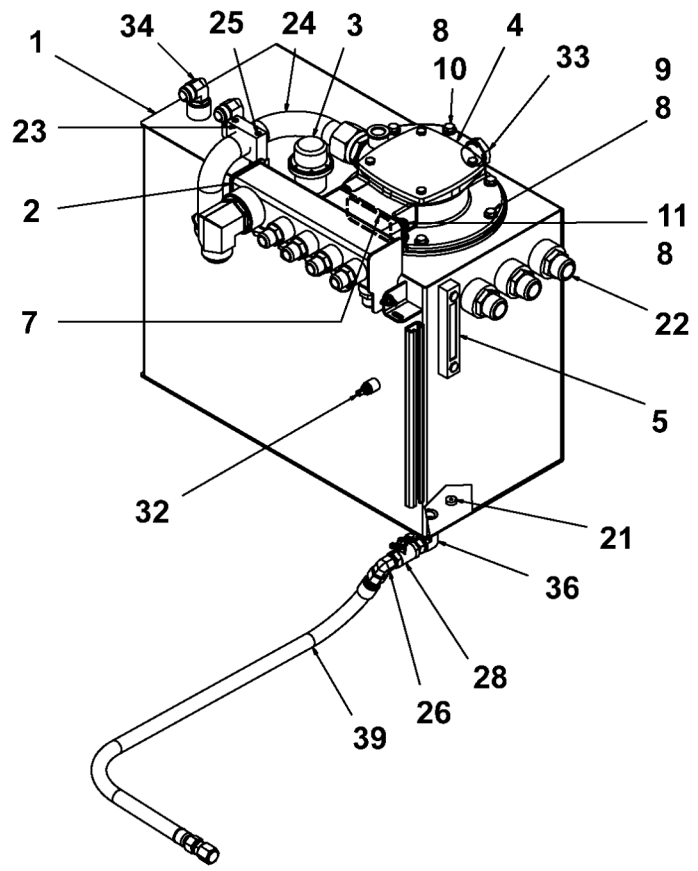

D717084500
Hydraulic tank

Item	Part Number	Quantity	Description
1	D717084501	1	Hydraulic tank
2	D717084525	1	Hydraulic suction manifold
3	D717084538	1	Cap, tank fill
4	D717084544	1	Hydraulic filter
5	D717084545	1	Gauge, hydraulic sight
7	D717084546	1	O-ring, suction manifold seal
8	D717801086	12	Flat washer, 0.5"
9	D717800750	4	Screw,1/2"
10	D717800694	2	Screw, 1/2"
11	D717800743	4	Screw, 1/2"
12	D717801044	4	Narrow washer, 0.38"
13	D717800834	2	Lock nut, 3/8"
14	D717800603	2	Screw, 3/8"
15	D717802038	1	Adapter, 1/2"-32
18	D717801968	1	Plug, 16
19	D717800008	1	Elbow, 32-32
20	D717800218	10	Adapter, 16-16
21	D717084548	1	Magnet

Please check Table of Contents for use of this assembly

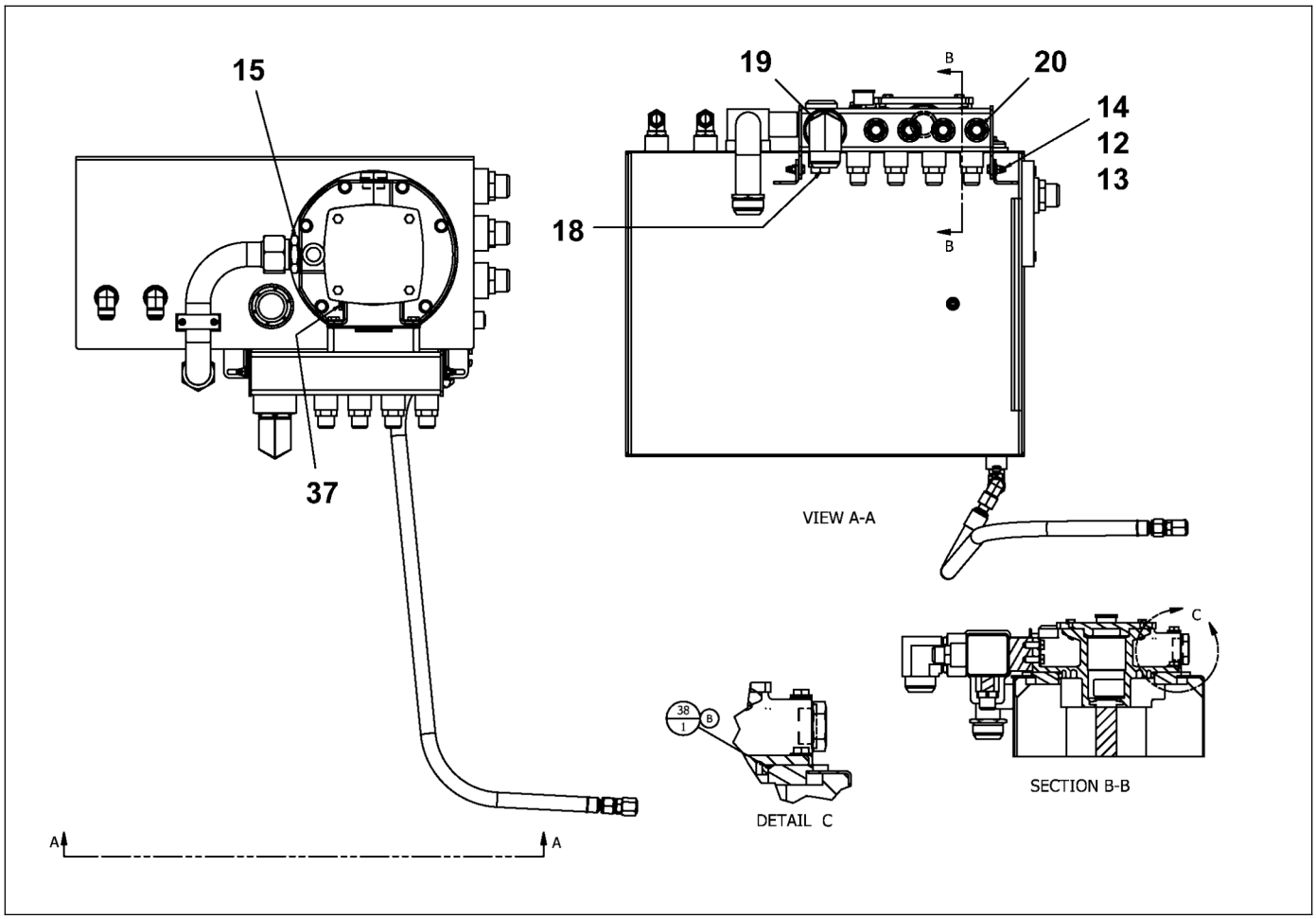

D717084500
Hydraulic tank

Item	Part Number	Quantity	Description
22	D717801975	3	Adapter, 24-24
23	D717084551	1	Stauff clamp, 2"
24	D717084553	1	Tube
25	D717800778	2	Screw, 1/4"
26	D717802024	1	Elbow, 12-12
28	D717080023	1	Ball Valve
29	D717801919	1	Adapter, straight
30	D717800085	1	Elbow, 12-12
32	D717084554	1	Temperature sensor
33	D717084555	1	Adapter, 1.5"
34	D717800176	2	Elbow, 16-16
36	4812220143	1	Elbow, 12
37	4812220191	1	Plug, 1/4"
38	4812221201	1	O-ring
39	4812200298	0	Hose assembly, #133, 12

Please check Table of Contents for use of this assembly

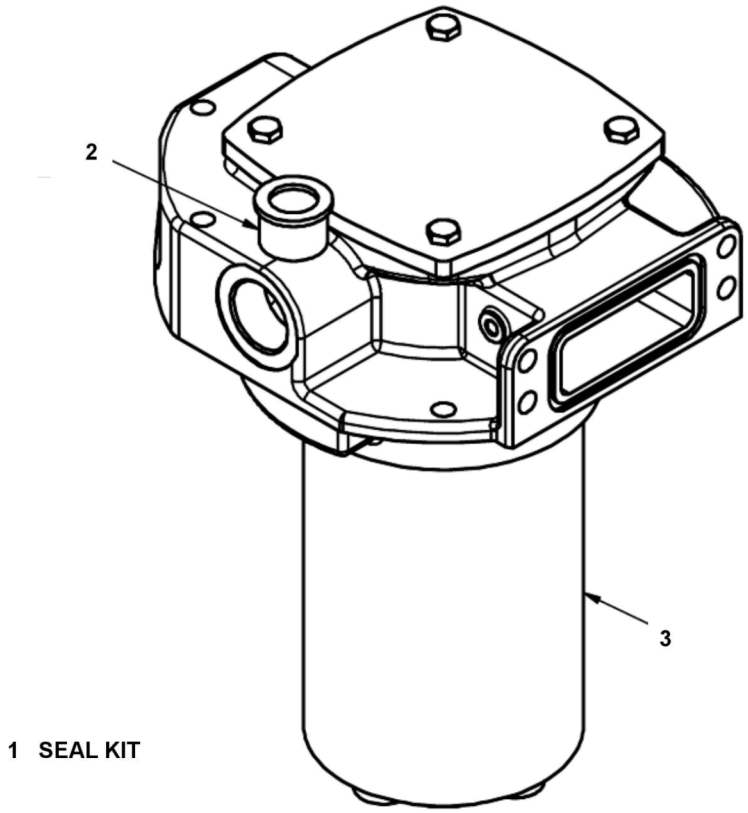

D717084544
Hydraulic filter

Item	Part Number	Quantity	Description
1	D717951135	1	Kit, seal
2	D717951142	1	Indicator
3	D717951149	1	Element, filter

Please check Table of Contents for use of this assembly

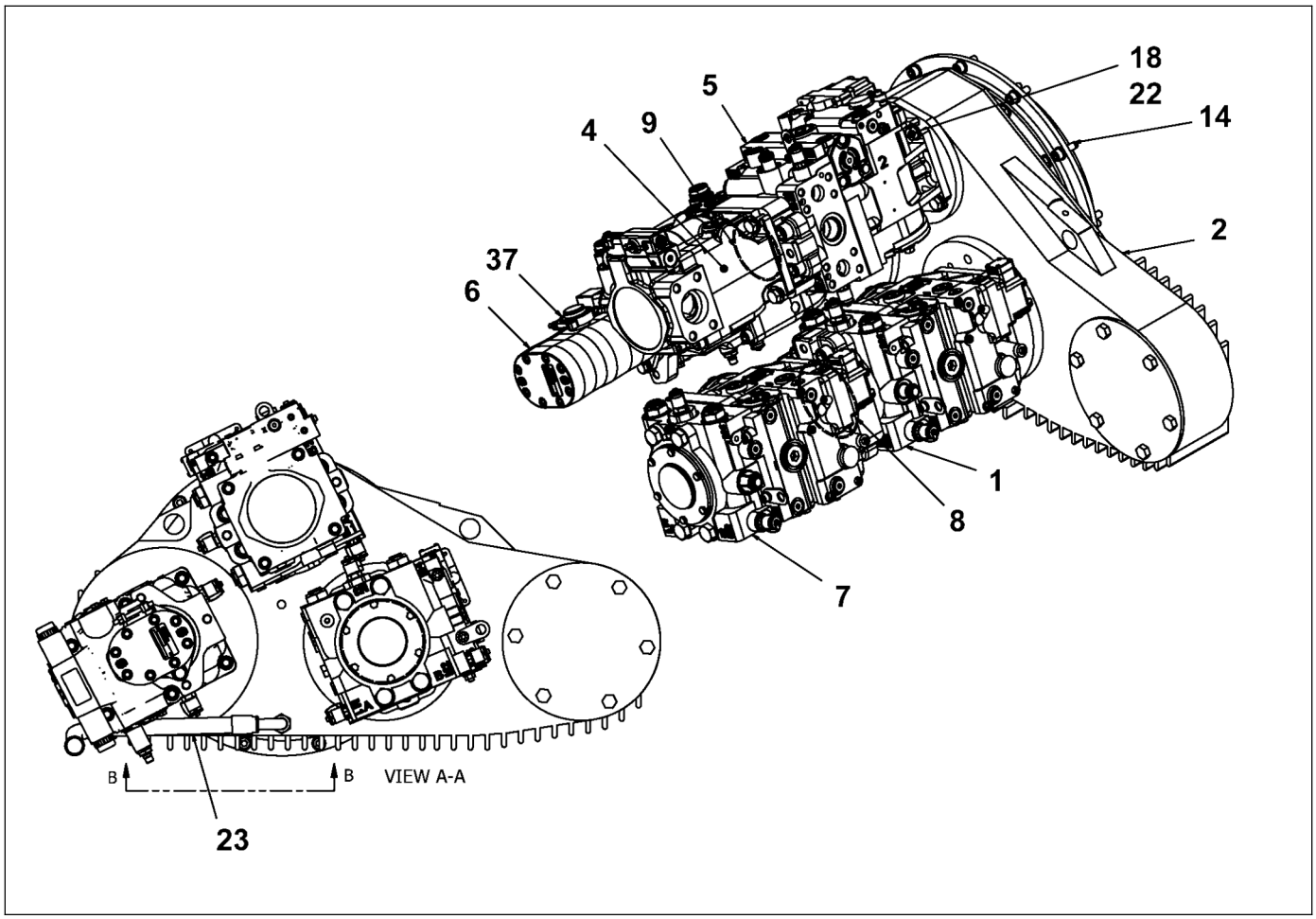

D717190000
Pump drive

Item	Part Number	Quantity	Description
1	D717191000	1	Pump, propel front
2	D717190500	1	Gear box, splitter
3	D717192500	1	Pump, auger tandem
4	D717194500	1	Pump, conveyor / work
5	D717193500	1	Pump, generator
6	D717193001	1	Pump, vibration
7	D717191500	1	Pump, propel rear
8	D717190001	1	O-ring
9	D717190002	1	O-ring, 154
10	D717190003	1	O-ring, 152
11	D717190004	1	Adapter, pump drive housing
12	D717190005	1	Adapter, flywheel flexplate
13	D717801135	26	Washer, 10mm
14	D717800757	12	Screw, M10
15	D717800484	14	Screw, M10
16	D717801044	8	Narrow washer, 0.38"
17	D717800596	8	Screw, 3/8"
18	D717801128	10	Washer, 12mm

Please check Table of Contents for use of this assembly

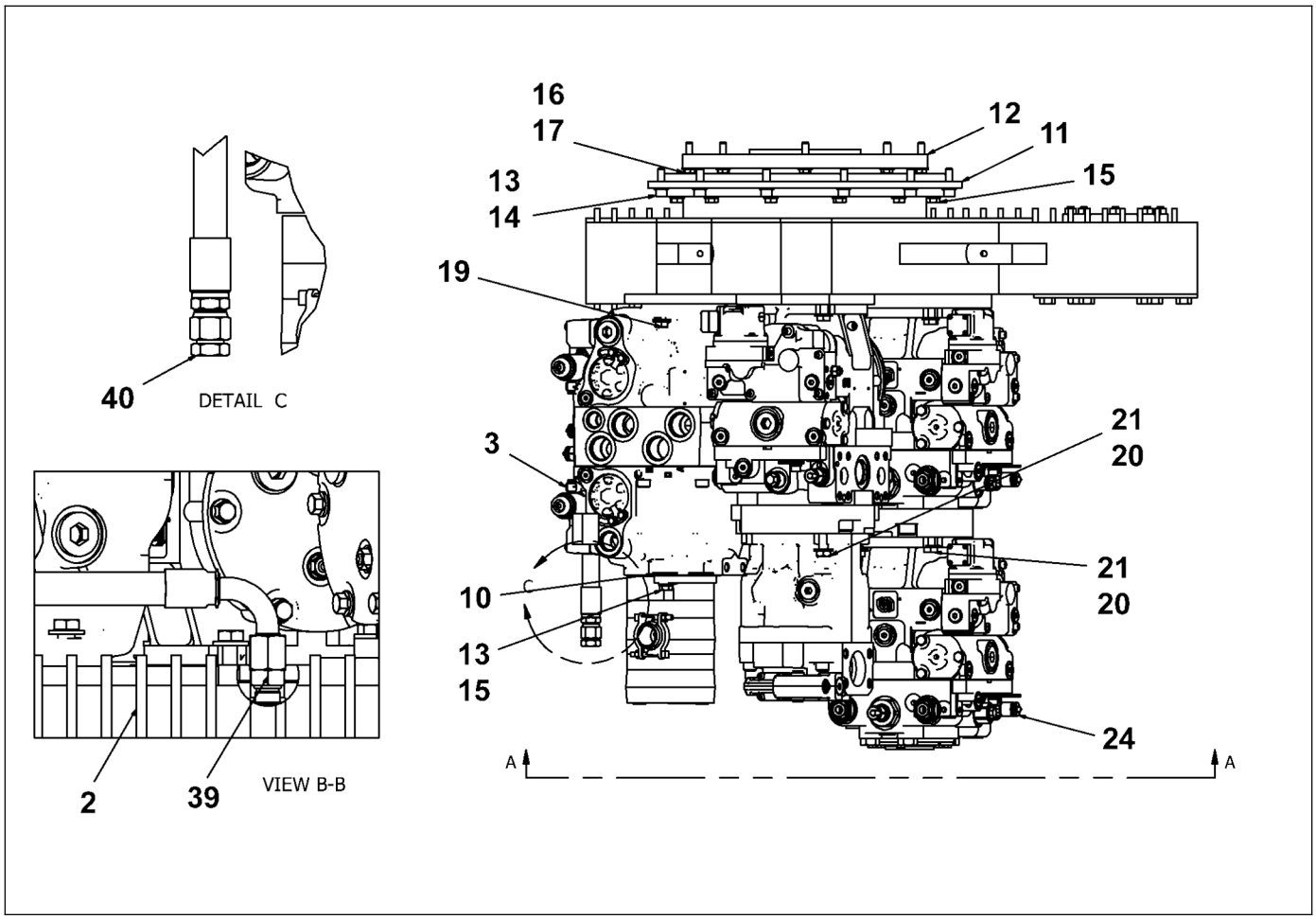

D717190000
Pump drive

Item	Part Number	Quantity	Description
19	D717801688	6	Screw, M12
20	D717801086	6	Flat washer, 0.5"
21	D717800736	6	Screw, 1/2"
22	D717801681	4	Screw, M12
24	D717090505	14	Test port, male
37	4812200087	1	Hose clamp
39	4812221348	1	Adapter, M10-10
40	D717801877	1	Plug, 10
41	4812200299	0	Hose assembly, #132, 10

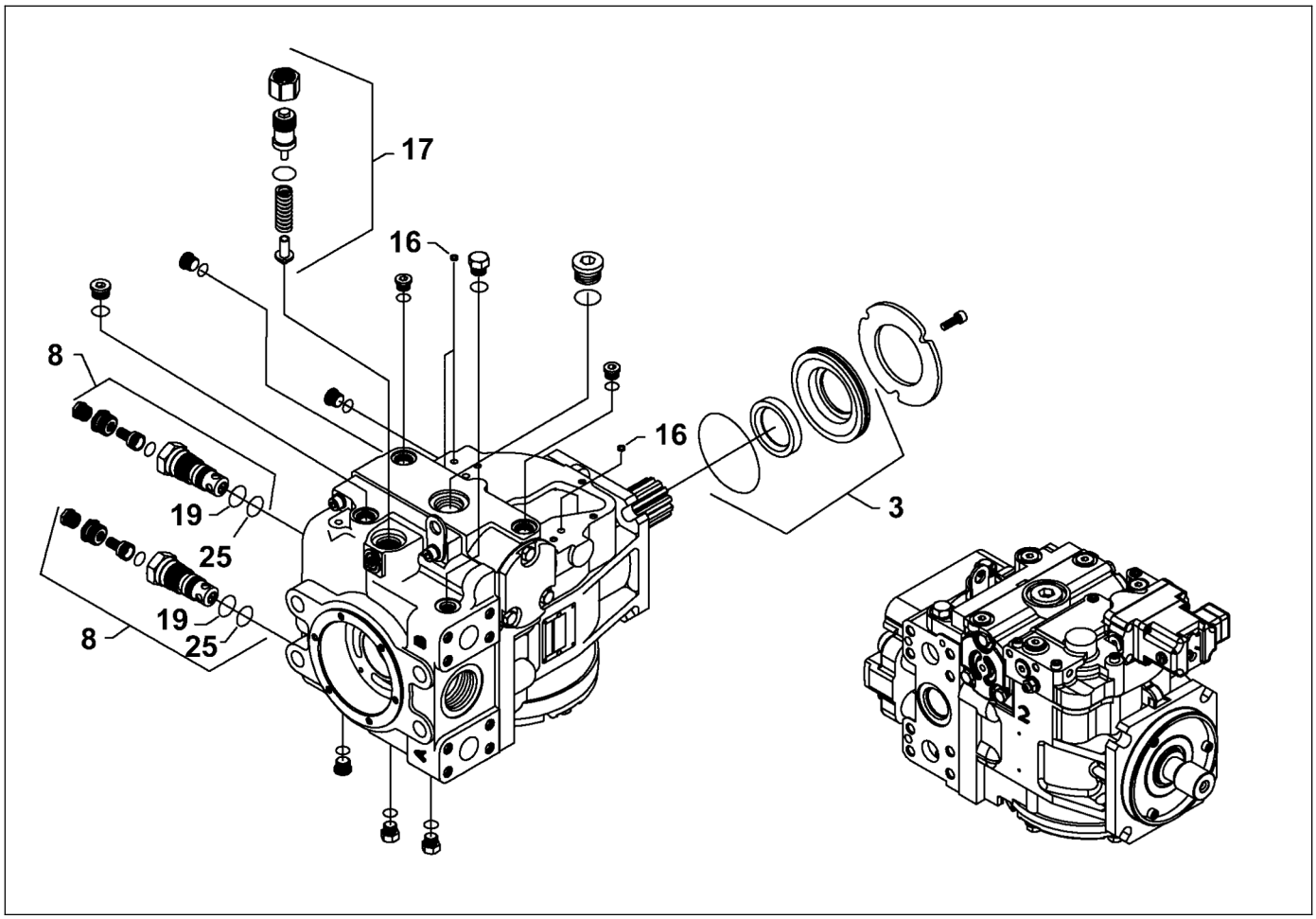

D717191000
Pump, propel front

Item	Part Number	Quantity	Description
1	D717950113	2	Ring, piston
2	D717950120	1	Plate, valve
3	D717950127	1	Shaft seal assembly
4	D717950253	1	Bearing, roller
5	D717950288	1	Charge pump set
6	D717950295	2	Gasket
7	D717950302	1	EDC kit
8	D717950309	2	Multifunction valve kit
9	D717950316	1	Cylinder block kit
10	D717950323	1	Bushing
11	D717950330	1	Journal bearing
12	D717950337	1	Charge pump cover
13	D717950351	2	Gasket
14	D717950365	2	C pad seal
15	D717950372	1	Charge pump shaft
16	D717950379	1	Screen, control filter
17	D717950547	1	Charge relief valve kit
18	D717950554	1	Key

Please check Table of Contents for use of this assembly

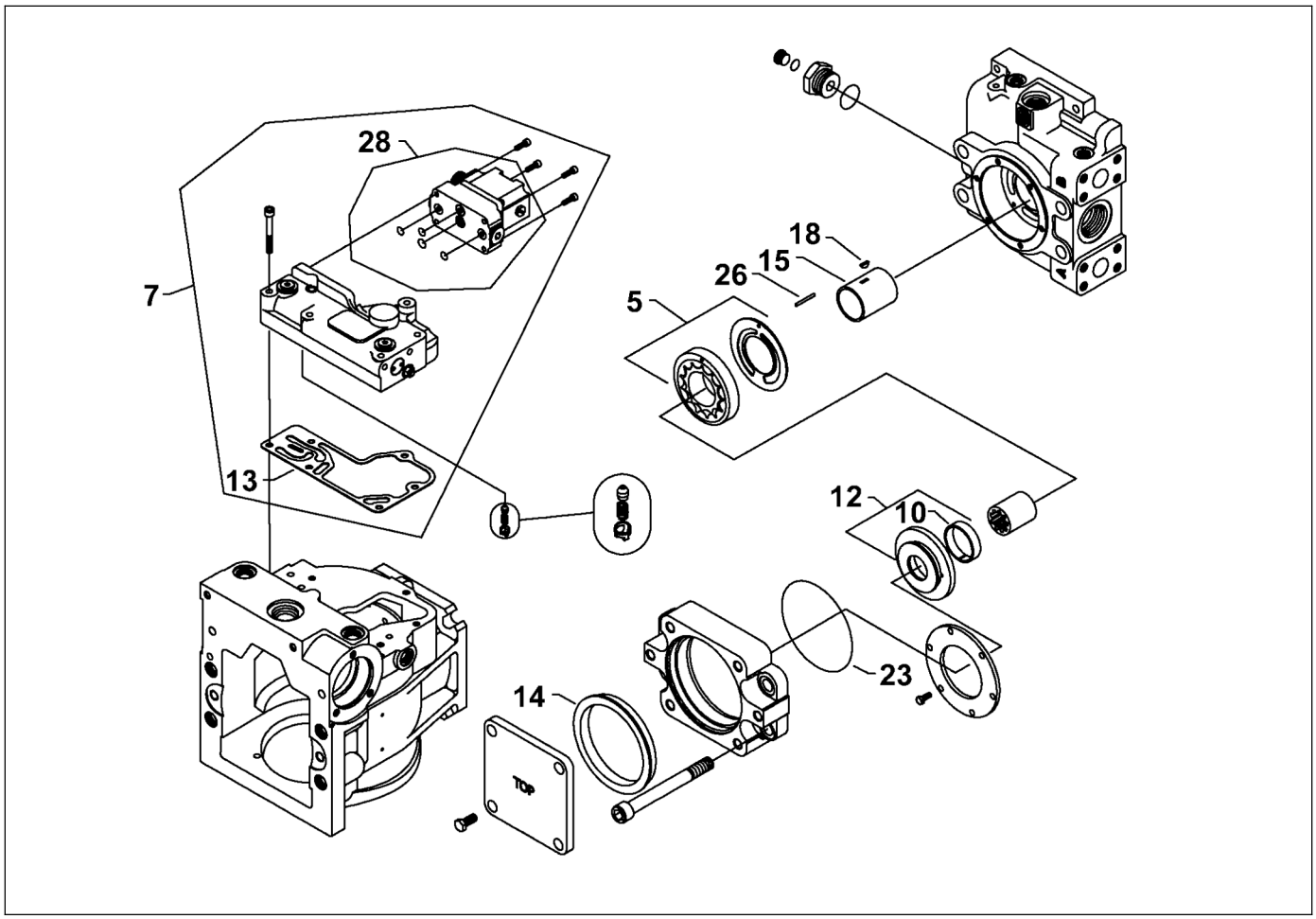

D717191000
Pump, propel front

Item	Part Number	Quantity	Description
19	D717950568	4	O-ring
20	D717950575	4	O-ring
21	D717950582	4	O-ring
22	D717950589	4	O-ring
23	D717950596	2	O-ring
25	D717950603	2	O-ring
26	D717950610	4	O-ring
27	D717950624	1	Pin
28	D717950645	1	Retaining ring
29	D717950701	1	PCP
30	D717950561	4	O-ring
31	D717951065	10	O-ring
32	D717951072	2	O-ring
33	D717951079	2	O-ring
34	D717951086	2	Pin
35	D717951093	2	Plug
36	D717952892	2	Spring
37	D717952976	1	Side cover insert

Please check Table of Contents for use of this assembly

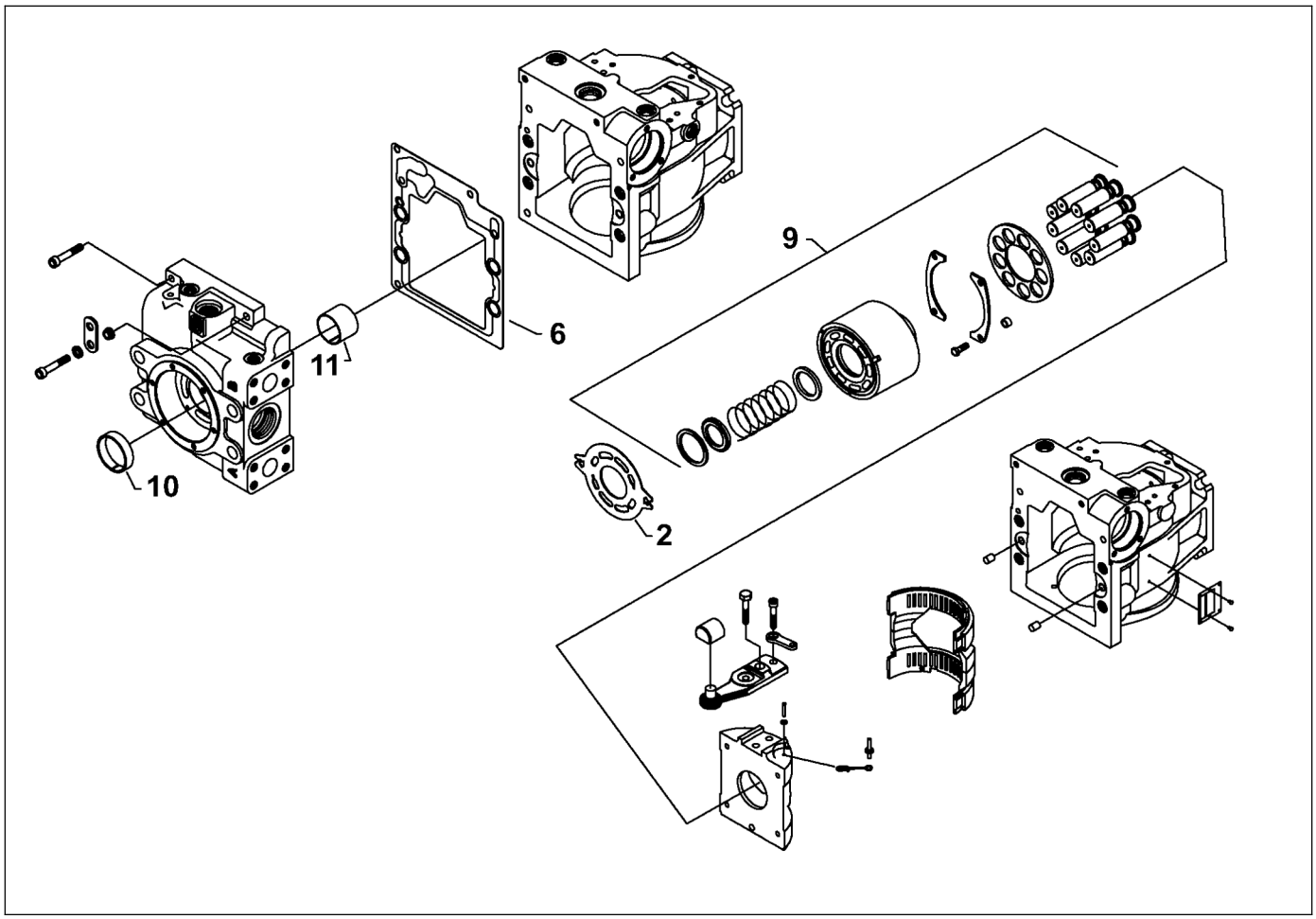

D717191000
Pump, propel front

Item	Part Number	Quantity	Description
38	D717952983	1	Retaining plate
39	D717952990	1	Retaining plate
40	D717952997	2	Spring seat
41	D717953004	1	Bearing
42	D717953011	4	Socket screw
43	D717953018	1	Servo arm
44	D717953025	1	Screw
45	D717953032	2	Lip seal
46	D717953067	9	Piston
47	D717953102	12	Screw
48	D717953109	1	Plug
49	D717953284	2	Guide post
50	D717953291	1	Feedback link
51	D717953305	1	Slipper guide
52	D717953319	1	Spring seat
53	D717953326	1	Spring retainer
54	D717953333	1	Spline shaft
55	D717953347	2	Slipper guide bearing

Please check Table of Contents for use of this assembly

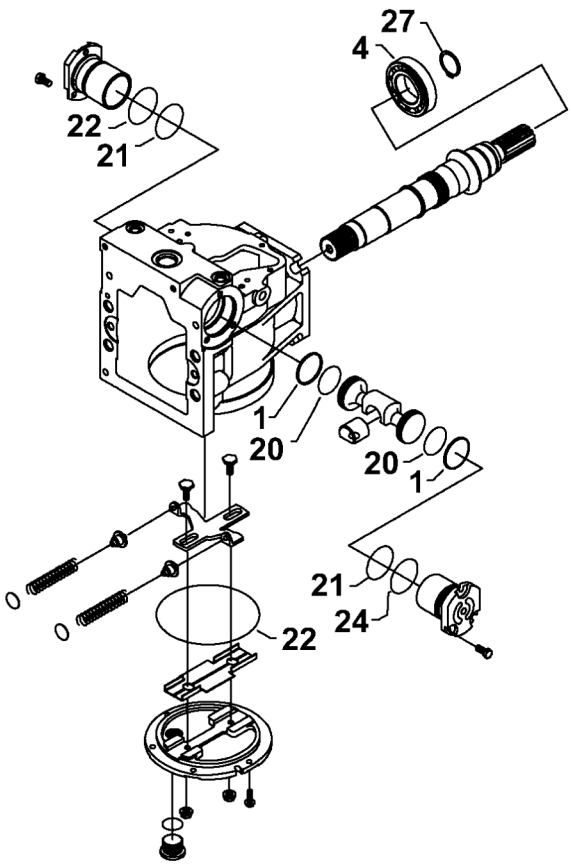

D717191000
Pump, propel front

Item	Part Number	Quantity	Description
56	D717953354	1	Cage locator link
57	D717953361	1	End cap
58	D717953368	4	Spacer
59	D717953382	1	Flange adapter
60	D717953389	1	Swash plate
61	D717953410	1	Spring
62	D717953431	2	Piston ring
63	D717953438	2	Check valve
64	D717953452	1	Lifting bracket spacers
65	D717953459	1	Lifting bracket
66	D717953480	1	Flange cover
67	D717953494	1	Coupling
68	D717953501	2	Shim
69	D717953508	1	Pin
70	D717953515	1	Spring retainer
71	D717953522	1	Variable swash plate
72	D717953529	1	Side cover
73	D717953536	1	Variable housing

Please check Table of Contents for use of this assembly

DYNAPAC
Part of the Atlas Copco Group

Please see previous page for drawing.

D717191000
Pump, propel front

Item	Part Number	Quantity	Description
74	D717953585	1	Spring
75	D717953613	1	Cylinder block
76	D717953641	1	Servo piston
77	D717953648	1	Leveler
78	D717953669	2	Servo cylinder
79	D717953697	1	Slider block
80	D717953858	1	Control orifice kit
81	D717953886	4	Nut
82	D717953928	2	O-ring
83	D717953949	6	O-ring
84	D717953956	2	O-ring
85	D717953970	2	O-ring
86	D717953977	1	O-ring
88	D717953998	1	Spiral pin
89	D717954005	3	Plug
90	D717954019	7	Plug
91	D717954026	2	Plug
92	D717954047	1	Retaining ring

Please check Table of Contents for use of this assembly

DYNAPAC
Part of the Atlas Copco Group

Please see previous page for drawing.

D717191000
Pump, propel front

Item	Part Number	Quantity	Description
93	D717954061	2	Screw
94	D717954068	6	Screw
95	D717954075	6	Screw
96	D717954103	8	Screw
97	D717954110	3	Screw, metric
98	D717954117	6	Screw
99	D717954124	2	Screw
100	D717954152	1	Screw
101	D717954159	1	Washer
102	D717954166	1	Washer
103	D717953865	1	Seal overhaul kit

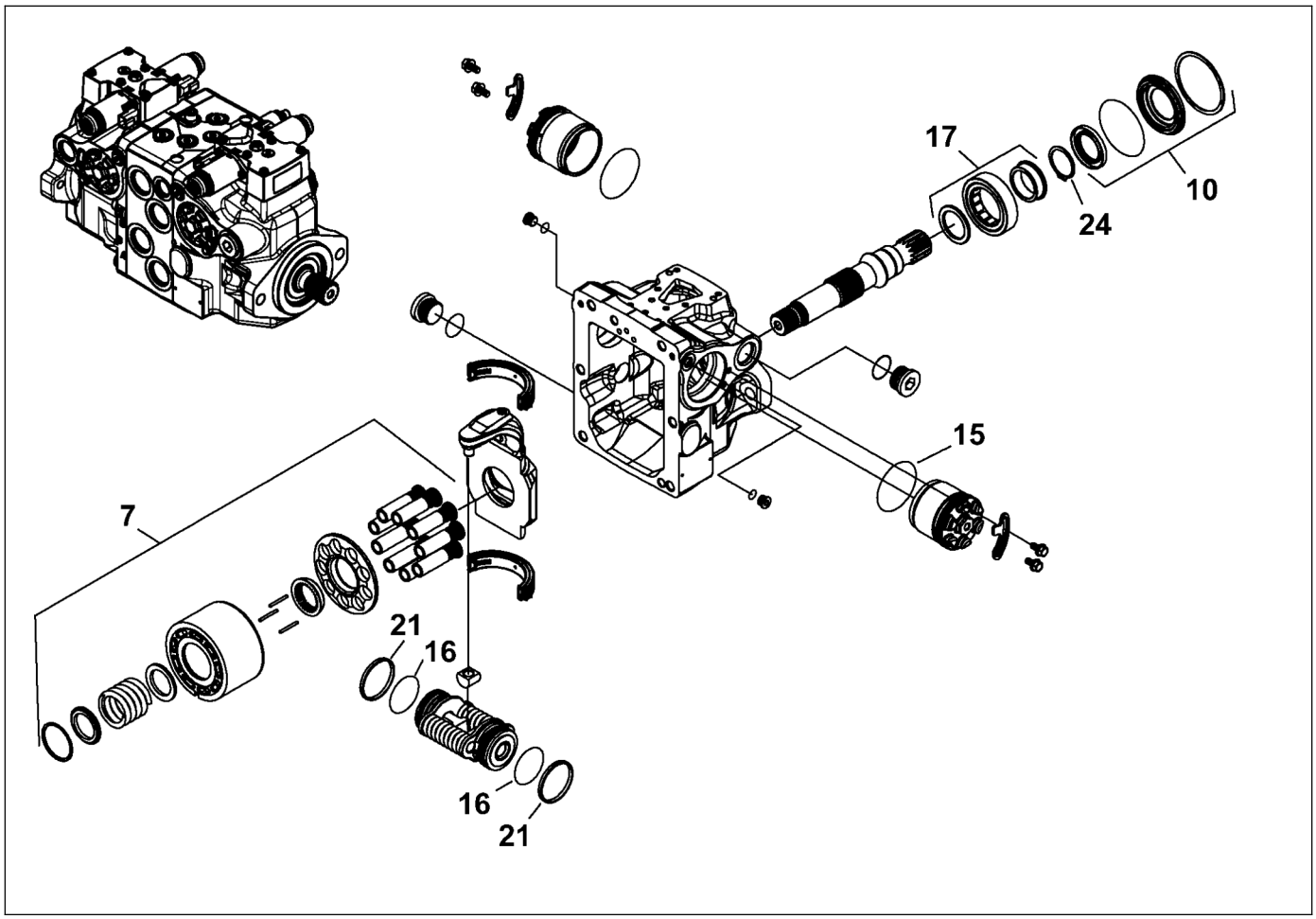

D717192500
Pump, auger tandem

Item	Part Number	Quantity	Description
1	D717950001	2	Charge relief valve kit
2	D717950057	4	Solenoid valve kit
3	D717950064	4	Orifice
4	D717950071	4	Gasket
5	D717950078	1	Shaft
6	D717950085	6	Gasket
8	D717950092	2	Cylinder block kit
9	D717950099	2	Bearing
10	D717950106	1	Coupling
11	D717950218	1	Shaft seal
12	D717950225	1	Charge relief valve kit
13	D717950232	1	A pad seal
14	D717950239	3	SCR plug
15	D717950246	4	Spring
16	D717950267	8	O-ring
17	D717950274	6	O-ring
18	D717950281	1	Ball bearing
19	D717950358	1	B pad seal

Please check Table of Contents for use of this assembly

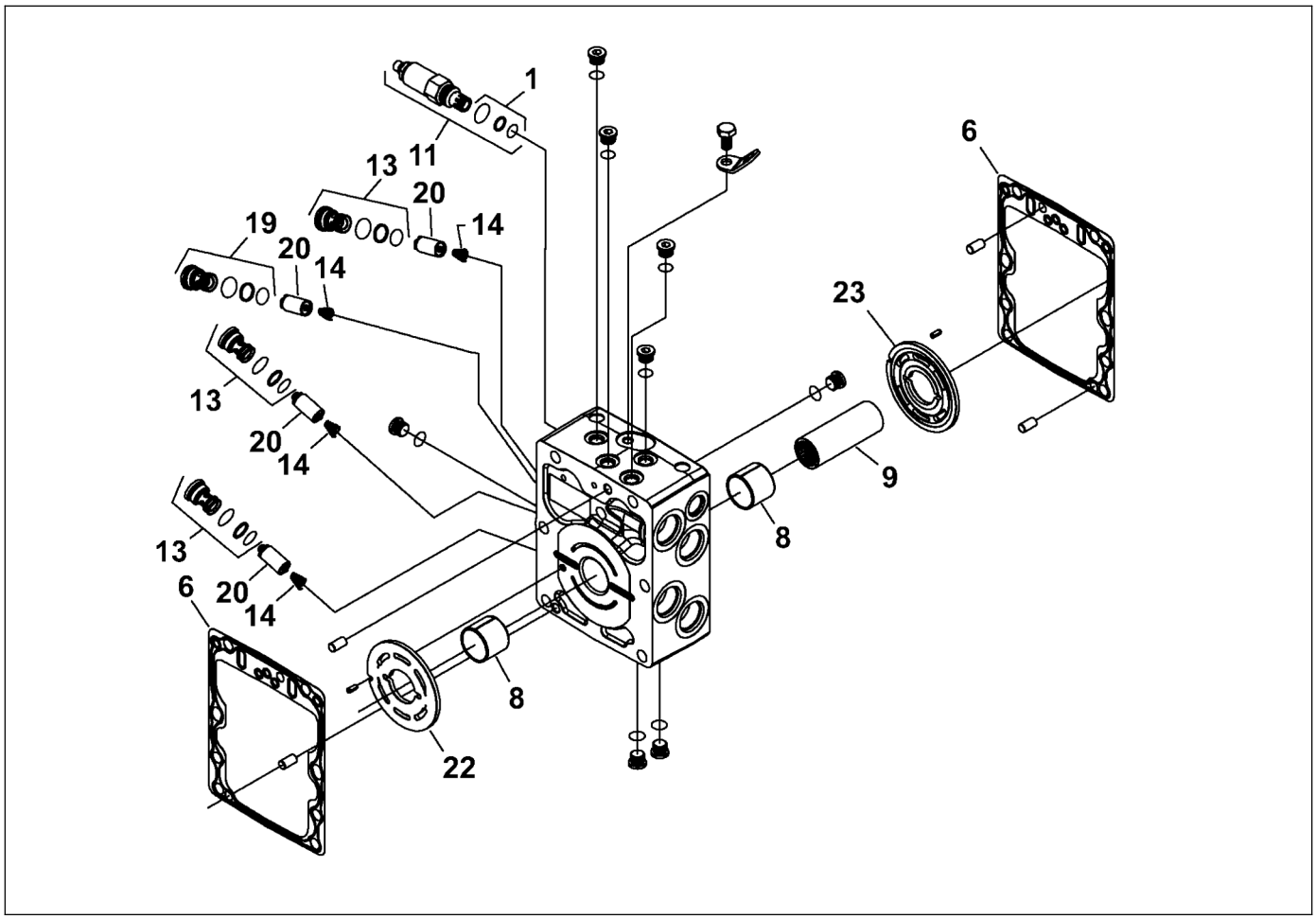

D717192500
Pump, auger tandem

Item	Part Number	Quantity	Description
20	D717950386	2	EDC kit
21	D717950393	1	SCR valve plug
22	D717950400	4	SCR valve
23	D717950407	6	Ring, piston
24	D717950428	1	Plate, valve
25	D717950435	1	Plate, valve
26	D717950638	1	Retaining ring
27	D717950792	8	Plug
28	D717951065	16	O-ring
29	D717951072	8	O-ring
30	D717951079	4	O-ring
31	D717951093	2	Plug
32	D717952724	2	Spring
33	D717952731	2	Retainer guide
34	D717952738	2	Plug
35	D717952745	2	ECD link
36	D717952752	2	Purchased parts
37	D717952759	2	Purchased parts

Please check Table of Contents for use of this assembly

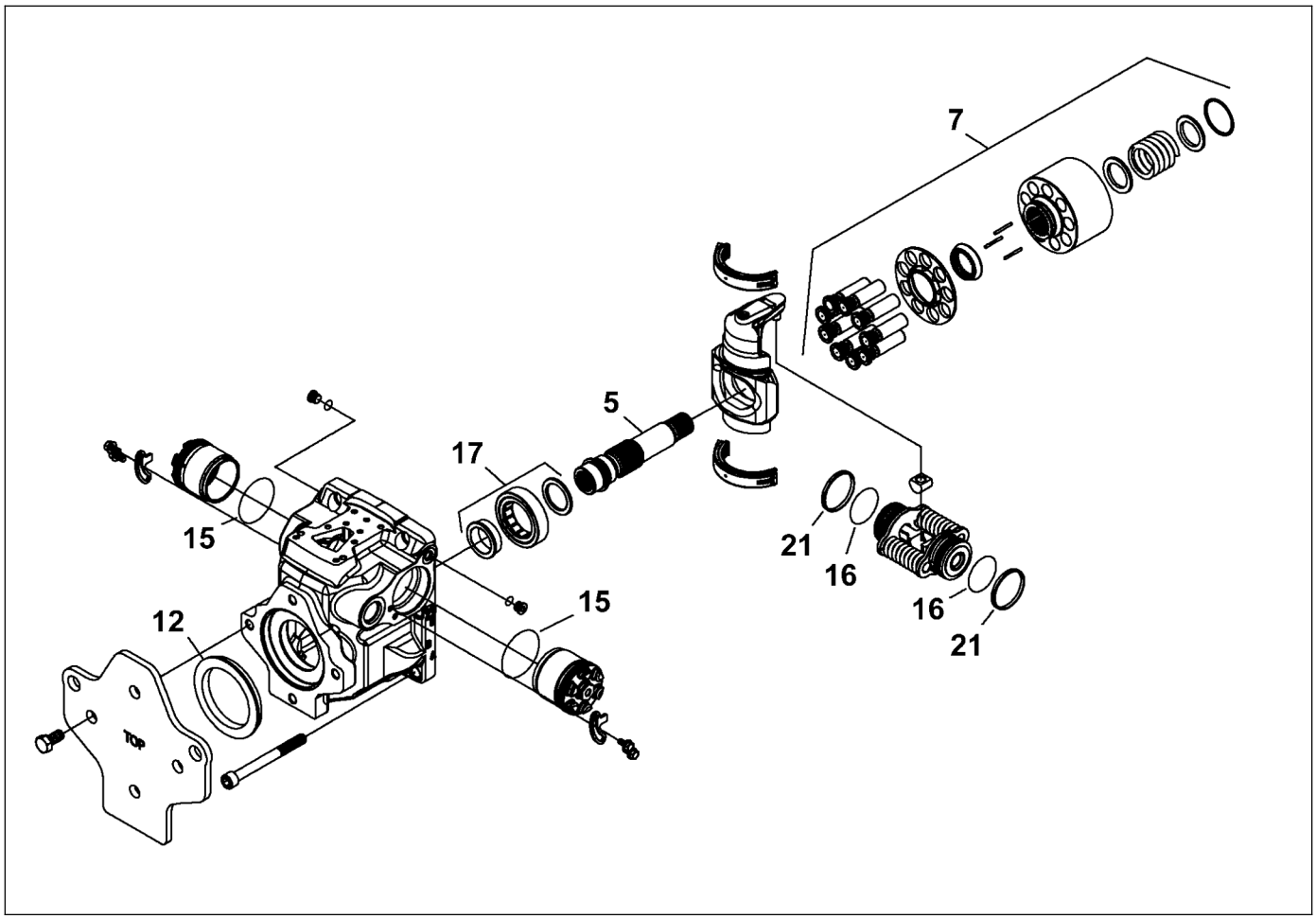

D717192500
Pump, auger tandem

Item	Part Number	Quantity	Description
38	D717952766	2	Swash plate
39	D717952773	1	Flange cover
40	D717952780	1	Housing
41	D717952787	1	Flange housing
42	D717952794	2	Lip seal
43	D717952801	2	Slider block
44	D717952808	1	Shaft tooth
45	D717952815	2	Washer
46	D717952822	2	Washer
47	D717952829	2	Slipper retainer
48	D717952836	4	Pin
49	D717952913	4	Screw
50	D717952920	1	Screw
51	D717952941	12	Screw
52	D717952962	8	Screw
53	D717953074	2	Screw
54	D717953088	2	Swash plate bearing kit
55	D717953095	6	Hold-down pin

Please check Table of Contents for use of this assembly

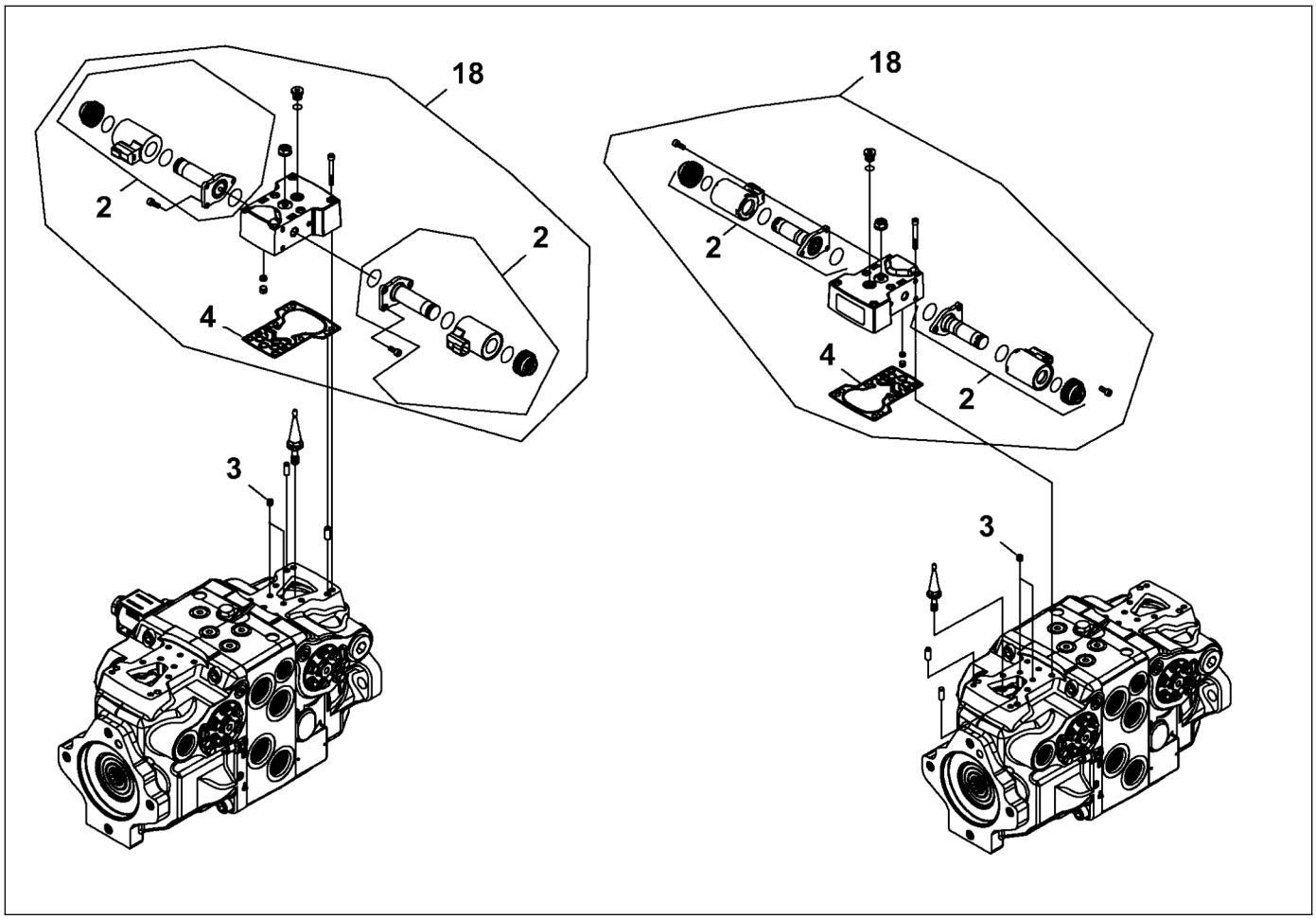

D717192500
Pump, auger tandem

Item	Part Number	Quantity	Description
56	D717953123	6	Screw
57	D717953130	1	Retaining ring
58	D717953137	4	Pin
59	D717953543	8	O-ring
60	D717953550	4	Coil kit
61	D717953564	2	Lock ring
62	D717953578	4	Locking plate
63	D717953599	2	Servo piston
64	D717953606	2	Piston kit
65	D717953627	1	Center section
66	D717953634	1	Lifting bracket
67	D717953683	4	Servo cylinder
68	D717953942	2	O-ring
69	D717953963	8	O-ring
70	D717953970	4	O-ring
71	D717953970	8	O-ring
72	D717953984	2	Slotted pin
73	D717954012	4	Plug

Please check Table of Contents for use of this assembly

DYNAPAC
Part of the Atlas Copco Group

Please see previous page for drawing.

D717192500
Pump, auger tandem

Item	Part Number	Quantity	Description
74	D717954033	8	Backup ring
75	D717954040	2	Retaining ring
76	D717954656	1	Seal overhaul kit

Please check Table of Contents for use of this assembly

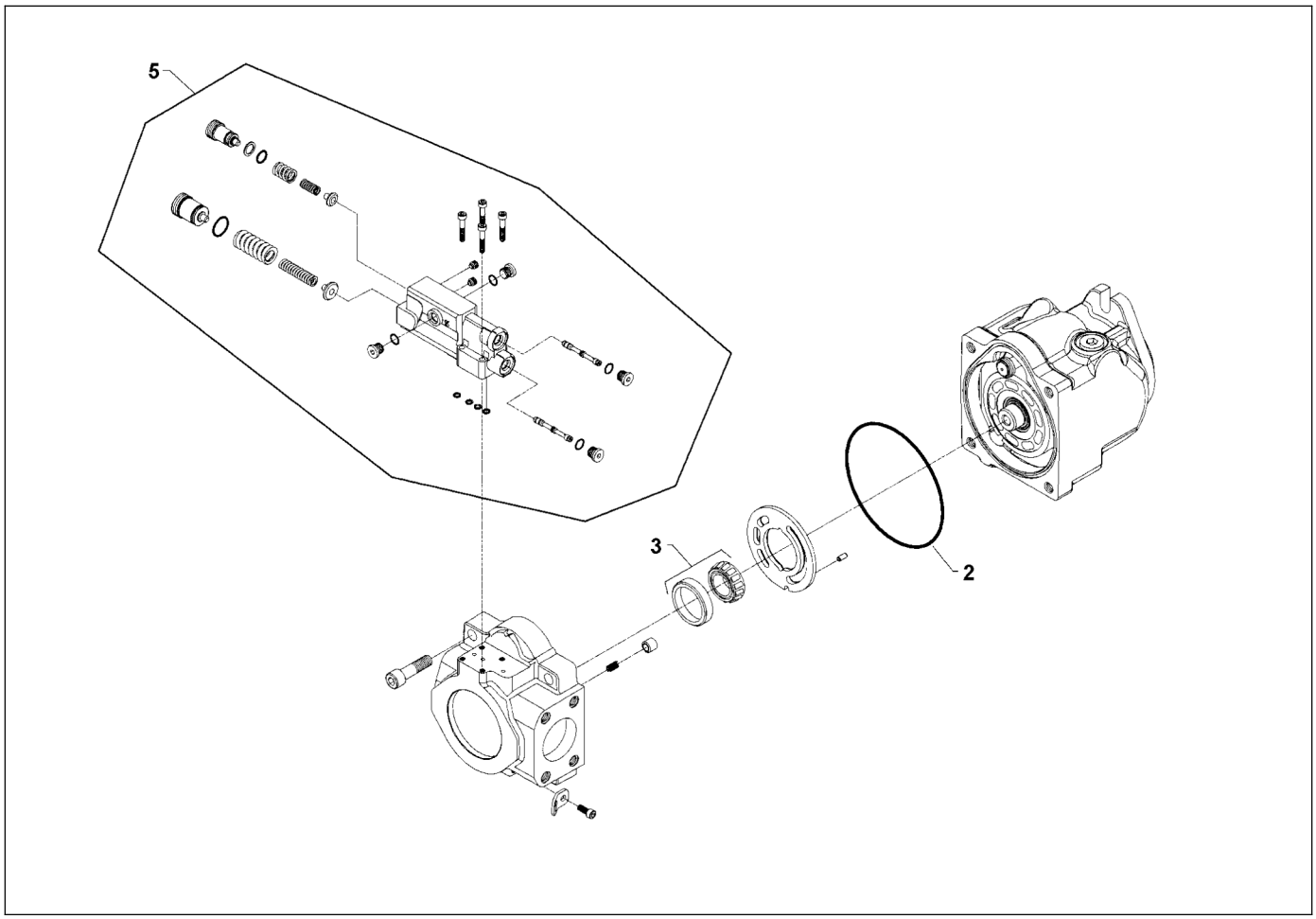

D717194500
Pump, conveyor / work

Item	Part Number	Quantity	Description
1	D717954243	1	Bias spring
2	D717954600	1	Swash plate
3	D717954411	1	Shaft retainer
4	D717954418	1	Retaining ring
5	D717954635	1	CCW valve plate
6	D717954250	1	Check valve poppet
7	D717954565	1	Spring
8	D717954481	2	Set screw
9	D717954012	4	Plug
10	D717953970	8	O-ring
11	D717954458	2	Spool
12	D717954572	1	Spring guide, LS
13	D717954369	1	Outer spring, LS
14	D717954327	1	Inner spring, LS
15	D717954222	2	Adjusting plug, LS
16	D717954579	1	Spring guide, PC
17	D717954376	1	Outer spring, PC
18	D717954334	1	Inner spring, PC

Please check Table of Contents for use of this assembly

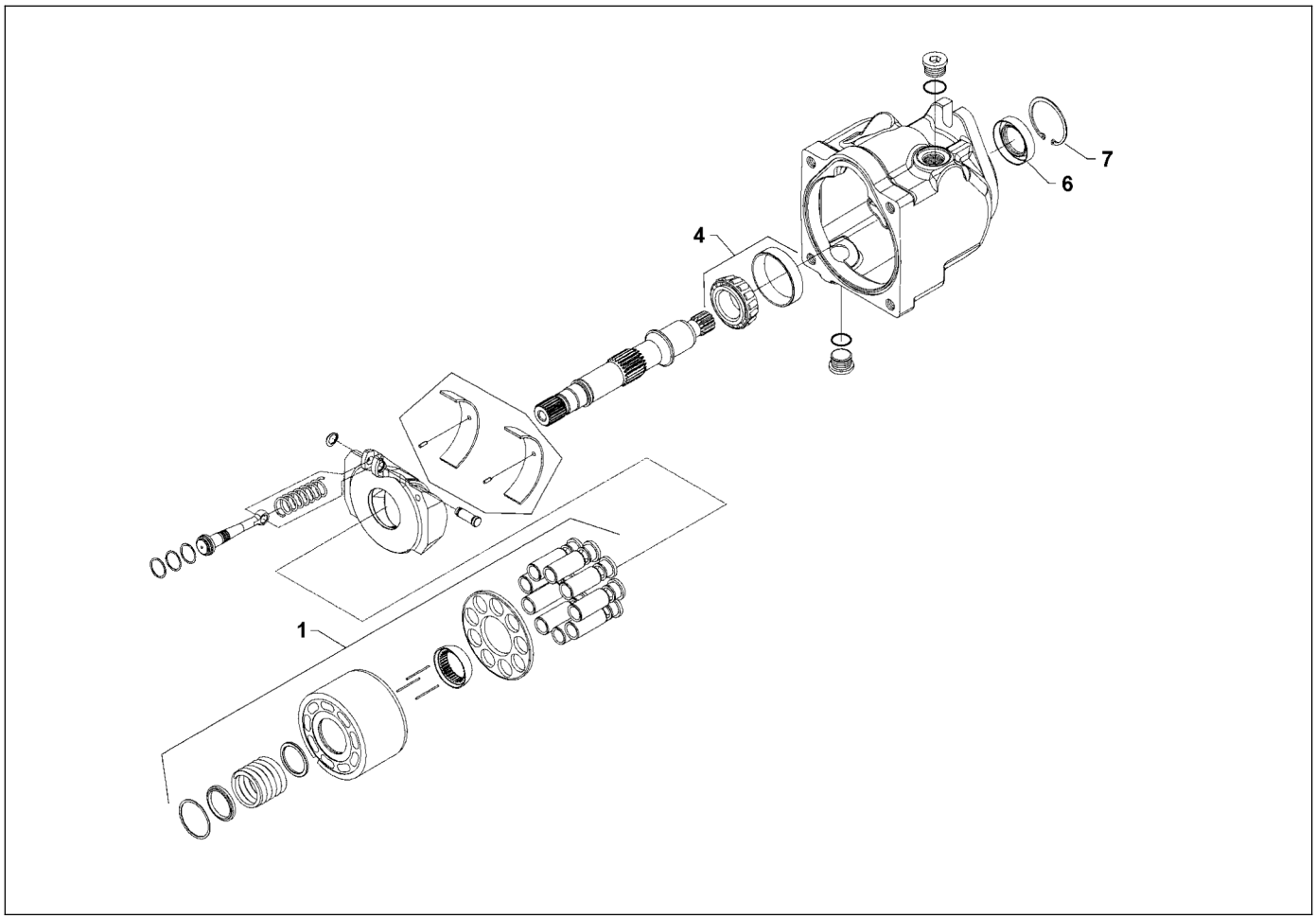

D717194500
Pump, conveyor / work

Item	Part Number	Quantity	Description
19	D717954229	1	Adjusting plug, PC
20	D717954362	2	O-ring
21	D717954439	8	Seal ring
22	D717954460	4	Screw
23	D717954495	1	15-tooth spline shaft
24	D717954292	1	Radial end cap
25	D717954453	4	Screw
26	D717953984	1	Slotted pin
27	D717954341	1	Lifting bracket
28	D717954467	0	Screw
29	D717950631	1	Ring, retaining
30	D717950260	2	Seal, lip
31	D717954320	1	2-bolt B-flange housing
32	D717954257	1	Cylinder block
33	D717954544	0	Plug
34	D717951072	4	O-ring
35	D717953095	3	Hold-down pin
36	D717954523	1	Slipper retainer guide

Please check Table of Contents for use of this assembly

DYNAPAC
Part of the Atlas Copco Group

Please see previous page for drawing.

D717194500
Pump, conveyor / work

Item	Part Number	Quantity	Description
37	D717954509	1	Slipper retainer
38	D717954397	9	Piston assembly
39	D717950183	1	Seal, end cap
40	D717950183	1	Seal, end cap
41	D717954390	1	Overhaul seal kit
42	D717950176	1	Kit, cylinder block
43	D717954474	1	Servo piston assembly
44	D717950197	1	Kit, rear bearing
45	D717954607	1	Swashplate bearing kit
46	D717950204	1	Kit, front bearing
47	D717950211	1	Kit, control

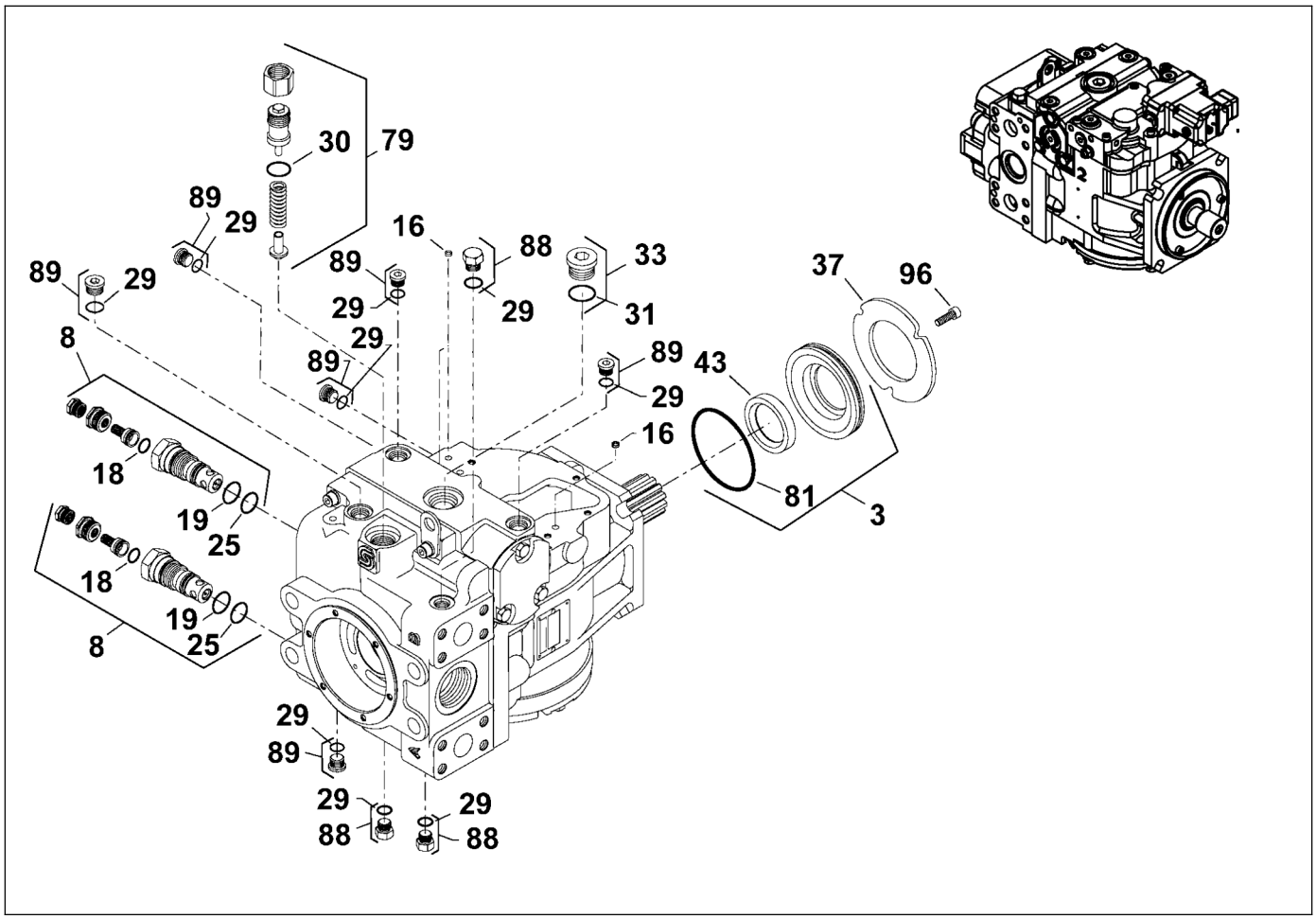

D717193500
Pump, generator

Item	Part Number	Quantity	Description
1	D717950113	2	Ring, piston
2	D717950120	1	Plate, valve
3	D717950127	1	Shaft seal assembly
4	D717950253	1	Bearing, roller
5	D717950288	1	Charge pump set
6	D717950295	2	Gasket
7	D717950302	1	EDC kit
8	D717950309	2	Multifunction valve kit
9	D717950316	1	Cylinder block kit
10	D717950323	2	Bushing
11	D717950330	1	Journal bearing
12	D717950337	1	Charge pump cover
13	D717950351	2	Gasket
14	D717950358	2	B pad seal
15	D717950372	1	Charge pump shaft
16	D717950379	3	Screen, control filter
17	D717950554	1	Key
18	D717950561	4	O-ring

Please check Table of Contents for use of this assembly

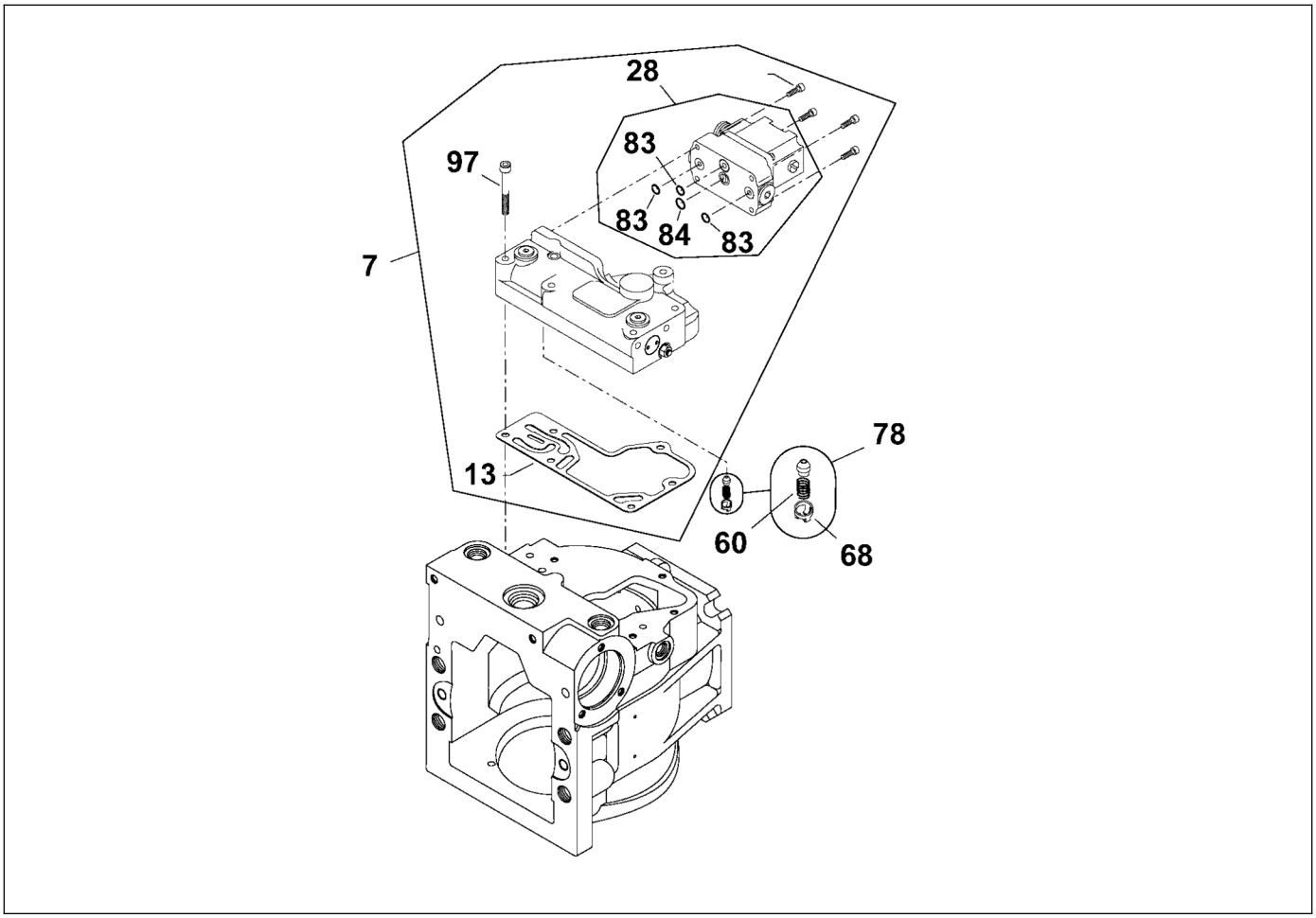

D717193500
Pump, generator

Item	Part Number	Quantity	Description
19	D717950568	4	O-ring
20	D717950575	4	O-ring
21	D717950582	4	O-ring
22	D717950589	4	O-ring
23	D717950596	2	O-ring
24	D717950603	2	O-ring
25	D717950610	4	O-ring
26	D717950624	1	Pin
27	D717950645	1	Retaining ring
28	D717950701	1	PCP
29	D717951065	10	O-ring
30	D717951072	2	O-ring
31	D717951079	2	O-ring
32	D717951086	2	Pin
33	D717951093	2	Plug
34	D717952892	2	Spring
35	D717952976	1	Side cover insert
36	D717952983	1	Retaining plate

Please check Table of Contents for use of this assembly

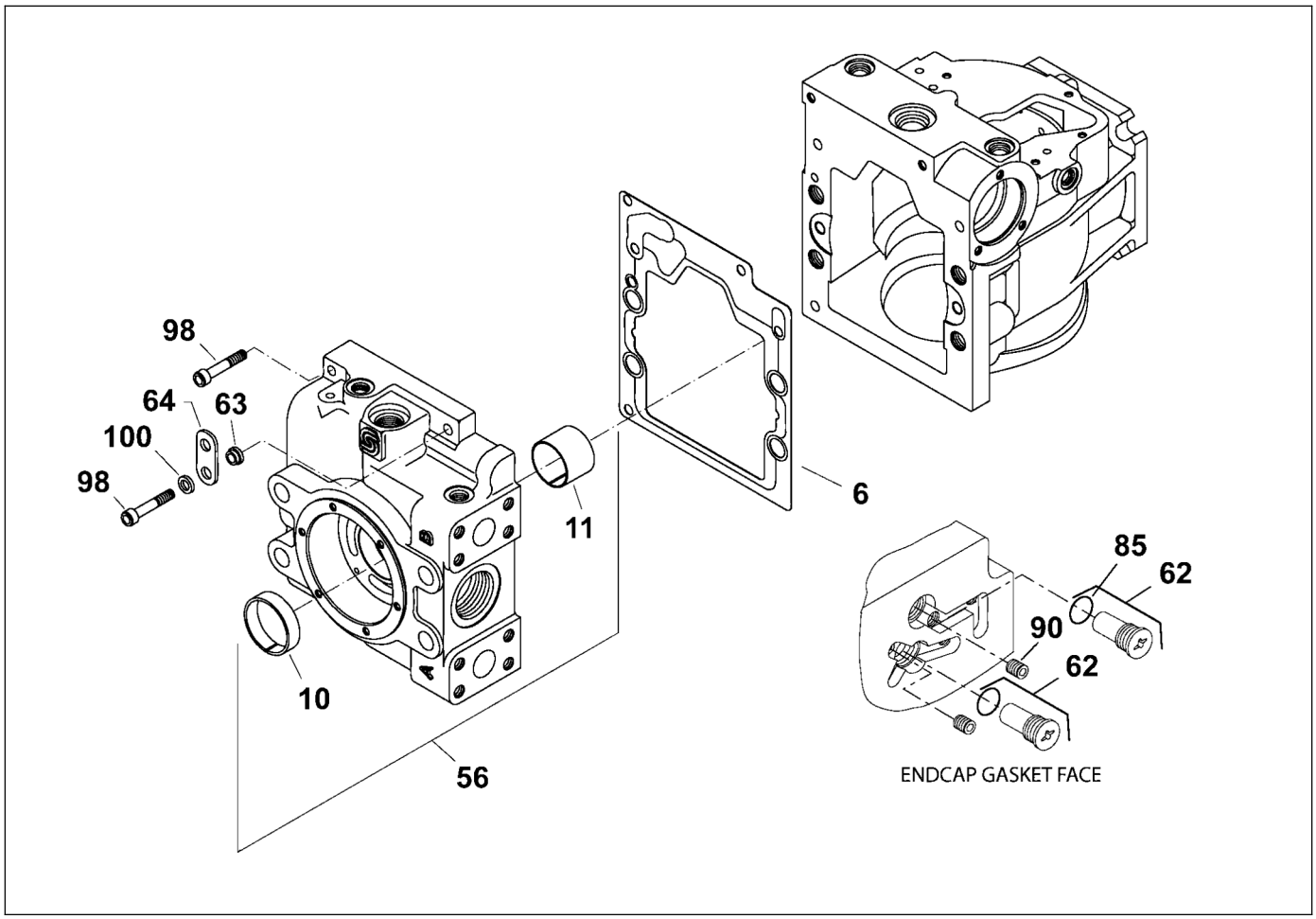

D717193500
Pump, generator

Item	Part Number	Quantity	Description
37	D717952990	1	Retaining plate
38	D717952997	2	Spring seat
39	D717953004	1	Bearing
40	D717953011	4	Socket screw
41	D717953018	1	Servo arm
42	D717953025	1	Screw
43	D717953032	2	Lip seal
44	D717953067	9	Piston
45	D717953102	12	Screw
46	D717953109	1	Plug
47	D717953284	2	Guide post
48	D717953291	1	Feedback link
49	D717953305	1	Slipper guide
50	D717953319	1	Spring seat
51	D717953326	1	Spring retainer
52	D717953333	1	Spline shaft
53	D717953340	1	Coupling
54	D717953347	2	Slipper guide bearing

Please check Table of Contents for use of this assembly

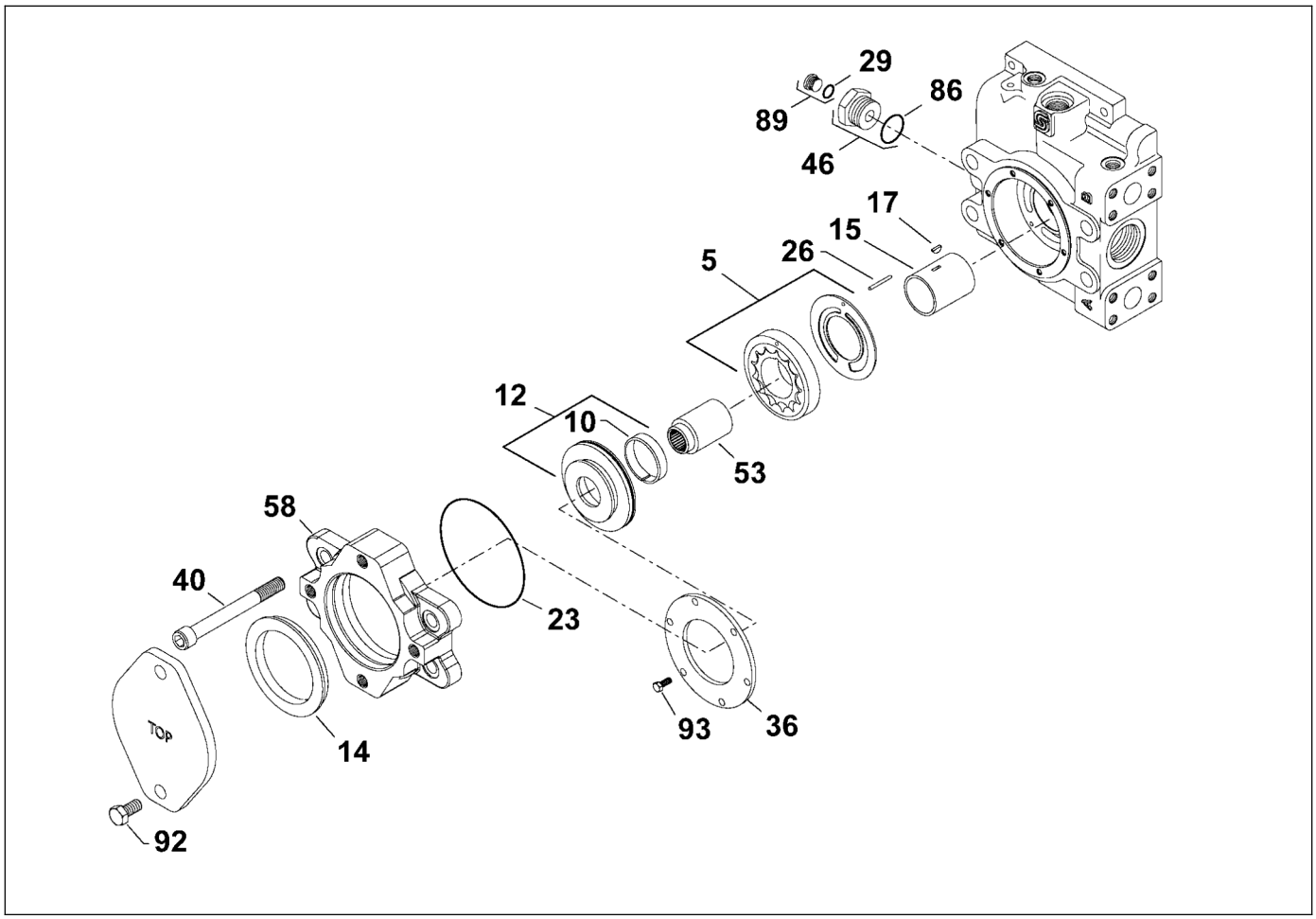

D717193500
Pump, generator

Item	Part Number	Quantity	Description
55	D717953354	1	Cage locator link
56	D717953361	1	End cap
57	D717953368	4	Spacer
58	D717953375	1	Flange adapter
59	D717953389	1	Swash plate
60	D717953410	1	Spring
61	D717953431	2	Piston ring
62	D717953438	2	Check valve
63	D717953452	1	Lifting bracket spacers
64	D717953459	1	Lifting bracket
65	D717953473	1	Flange cover
66	D717953501	2	Shim
67	D717953508	1	Pin
68	D717953515	1	Spring retainer
69	D717953522	1	Variable swash plate
70	D717953529	1	Side cover
71	D717953536	1	Variable housing
72	D717953585	1	Spring

Please check Table of Contents for use of this assembly

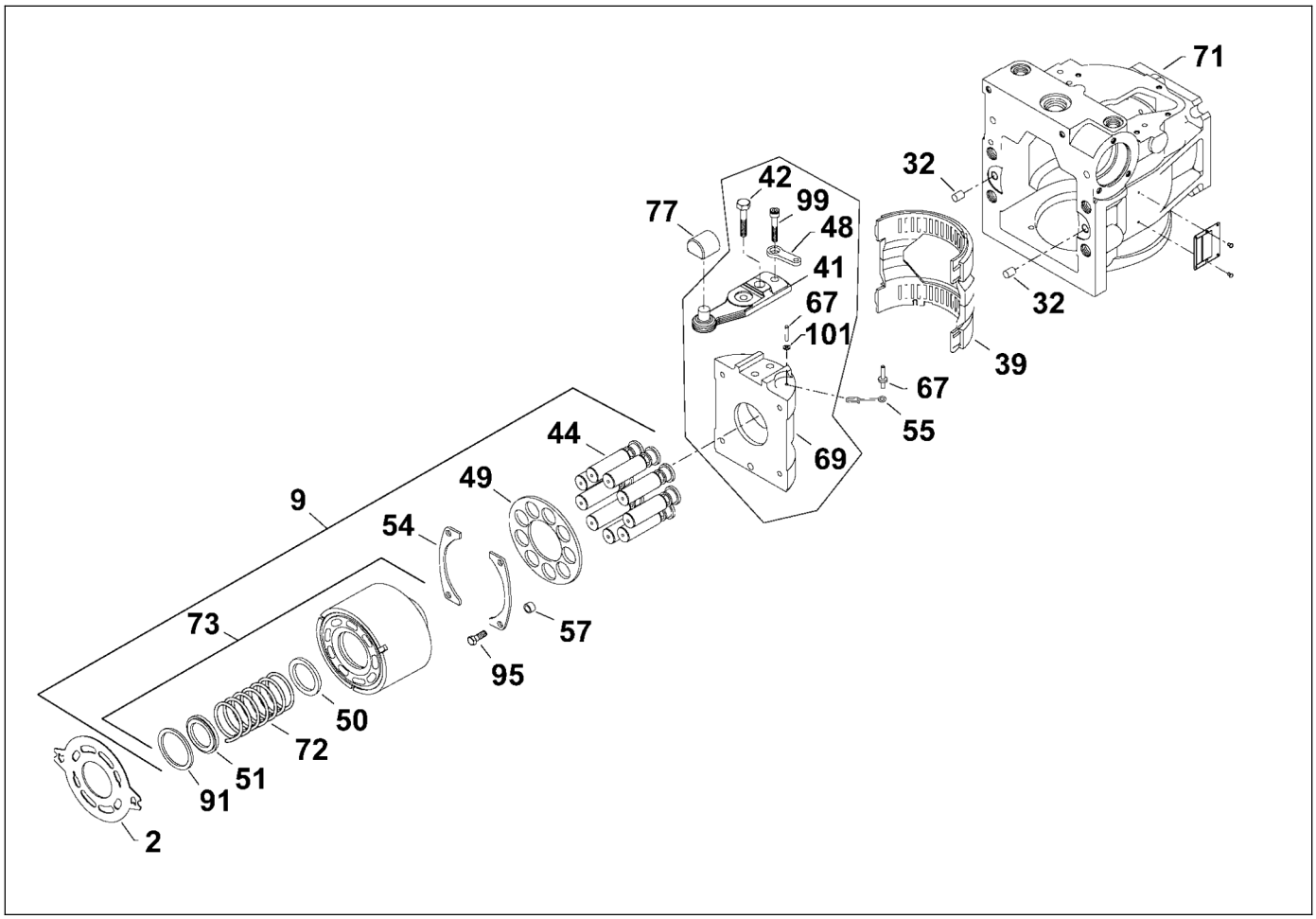

D717193500
Pump, generator

Item	Part Number	Quantity	Description
73	D717953613	1	Cylinder block
74	D717953641	1	Servo piston
75	D717953648	1	Leveler
76	D717953669	2	Servo cylinder
77	D717953697	1	Slider block
78	D717953858	1	Control orifice kit
79	D717953872	1	Charge relief kit
80	D717953886	4	Nut
81	D717953928	2	O-ring
82	D717953935	1	O-ring
83	D717953949	4	O-ring
84	D717953956	2	O-ring
85	D717953970	2	O-ring
86	D717953977	2	O-ring
87	D717953998	1	Spiral pin
88	D717954005	3	Plug
89	D717954019	7	Plug
90	D717954026	2	Plug

Please check Table of Contents for use of this assembly

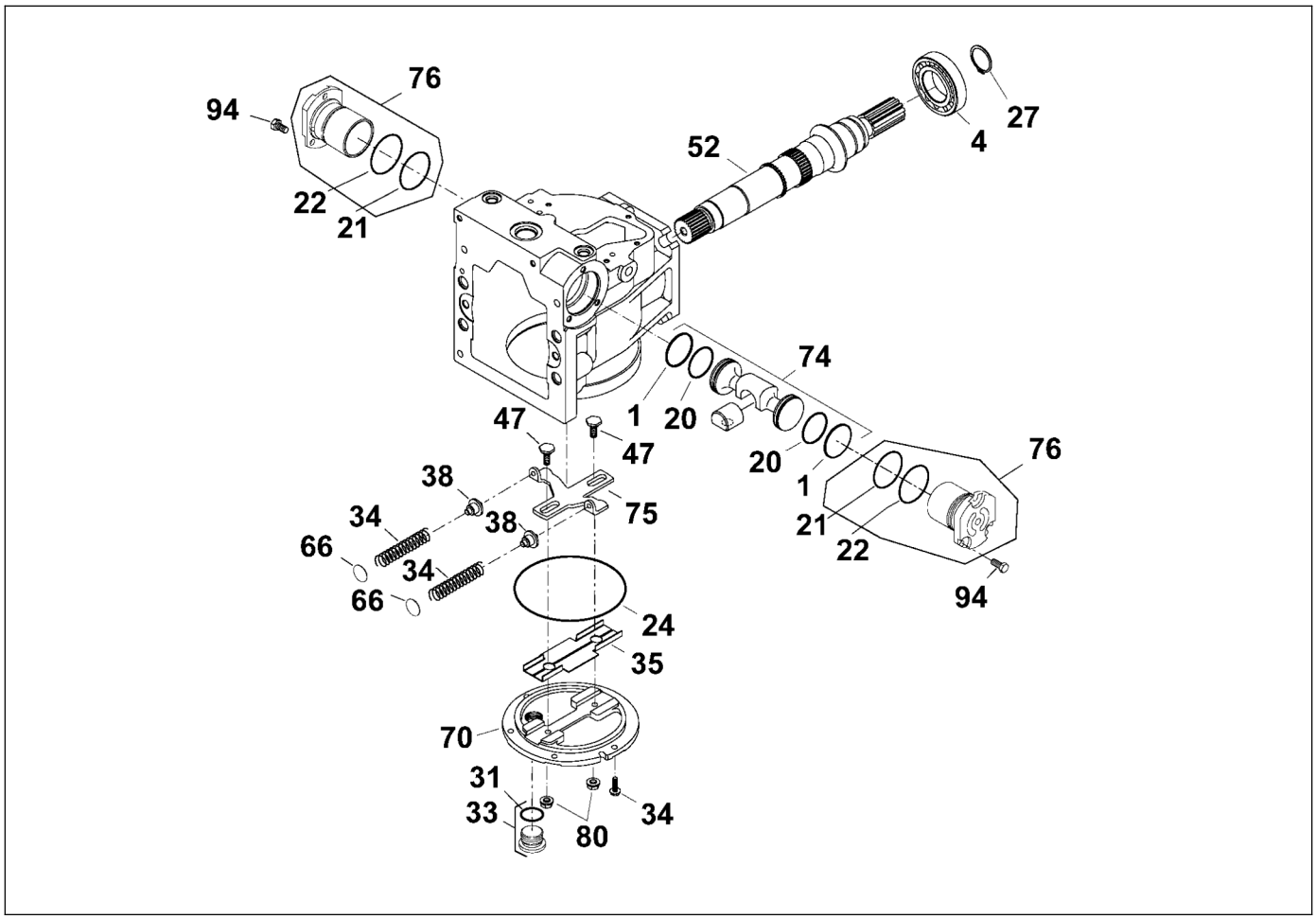

D717193500
Pump, generator

Item	Part Number	Quantity	Description
91	D717954047	1	Retaining ring
92	D717954061	2	Screw
93	D717954068	6	Screw
94	D717954075	6	Screw
95	D717954103	8	Screw
96	D717954110	3	Screw, metric
97	D717954117	6	Screw
98	D717954124	2	Screw
99	D717954152	1	Screw
100	D717954159	1	Washer
101	D717954166	1	Washer
102	D717953865	1	Seal overhaul kit

Please check Table of Contents for use of this assembly

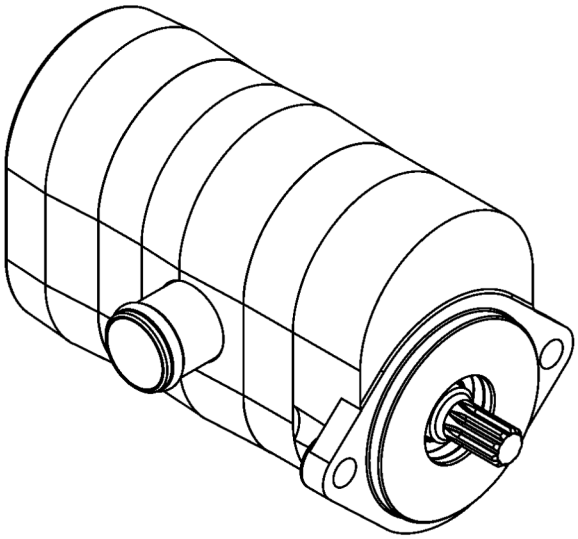

D717193001
Pump, vibration

Item	Part Number	Quantity	Description
1	D717950540	1	Seal kit

Please check Table of Contents for use of this assembly

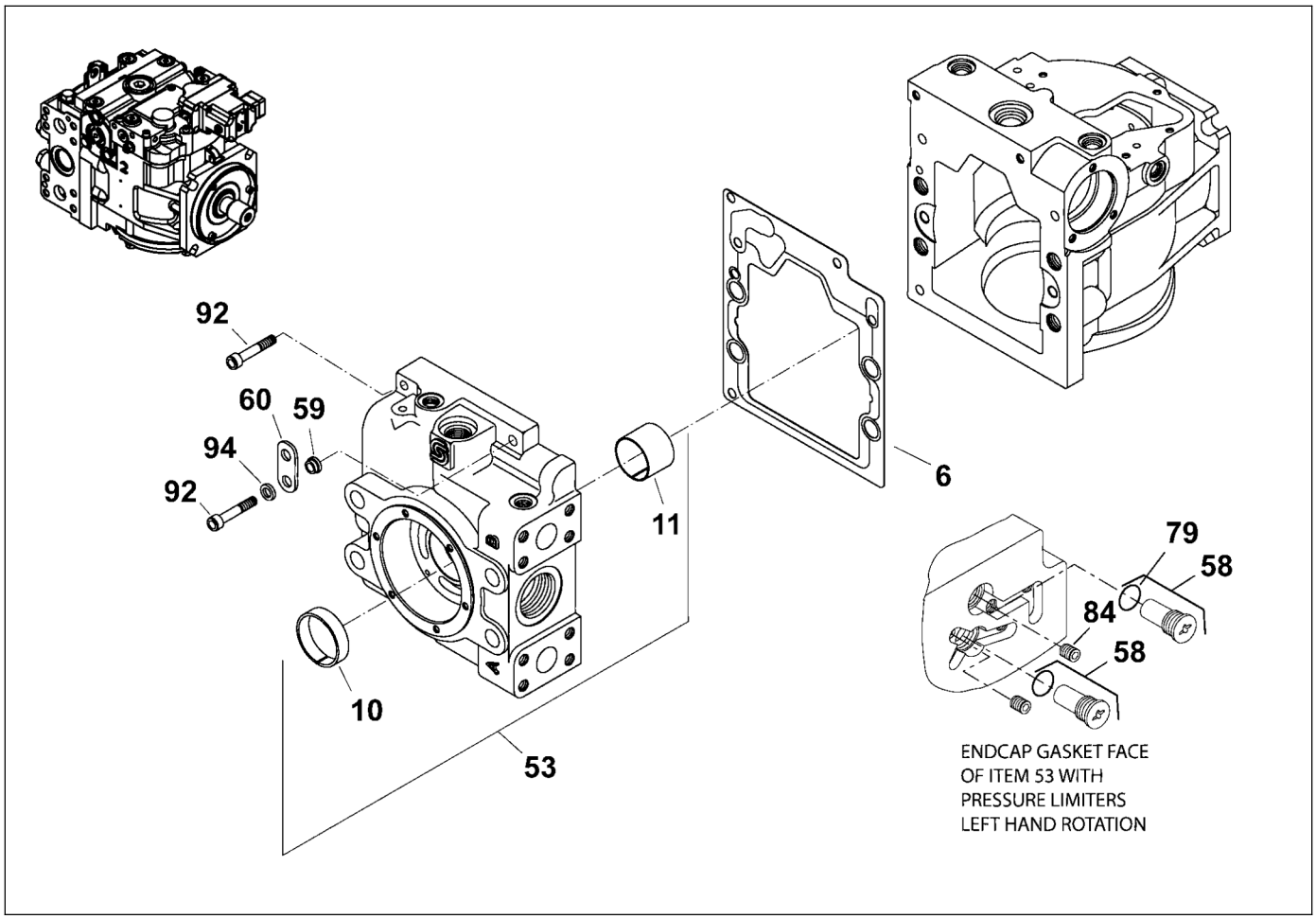

D717191500
Pump, propel rear

Item	Part Number	Quantity	Description
1	D717950113	2	Ring, piston
2	D717950120	1	Plate, valve
3	D717950127	1	Shaft seal assembly
4	D717950253	1	Bearing, roller
5	D717950288	1	Charge pump set
6	D717950295	2	Gasket
7	D717950302	1	EDC kit
8	D717950309	2	Multifunction valve kit
9	D717950316	1	Cylinder block kit
10	D717950323	2	Bushing
11	D717950330	1	Journal bearing
12	D717950344	1	Charge pump cover
13	D717950351	2	Gasket
14	D717950372	1	Charge pump shaft
15	D717950379	3	Screen, control filter
16	D717950547	1	Charge relief valve kit
17	D717950554	1	Key
18	D717950561	4	O-ring

Please check Table of Contents for use of this assembly

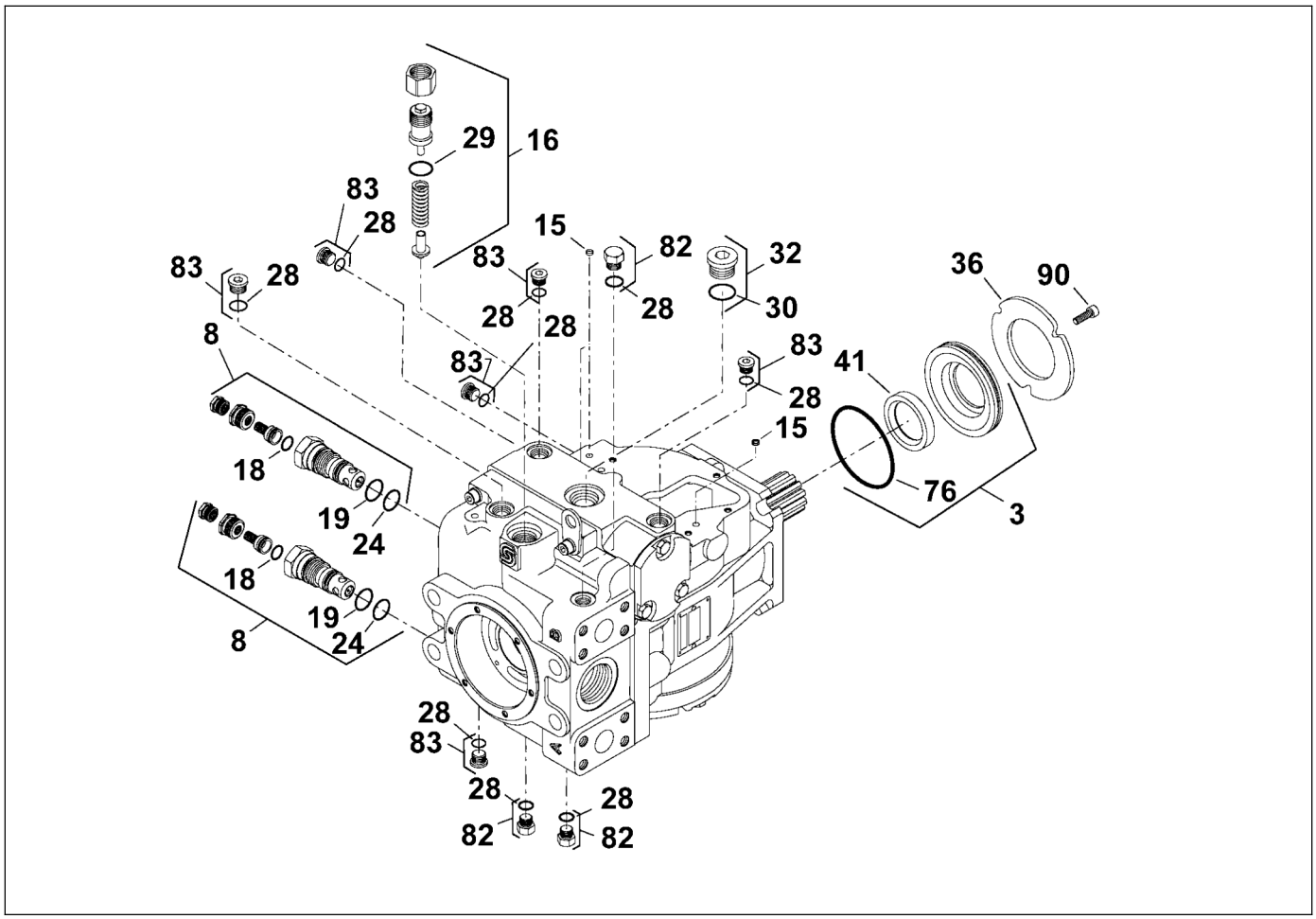

D717191500
Pump, propel rear

Item	Part Number	Quantity	Description
19	D717950568	4	O-ring
20	D717950575	4	O-ring
21	D717950582	4	O-ring
22	D717950589	4	O-ring
23	D717950603	2	O-ring
24	D717950610	4	O-ring
25	D717950624	1	Pin
26	D717950645	1	Retaining ring
27	D717950701	1	PCP
28	D717951065	10	O-ring
29	D717951072	2	O-ring
30	D717951079	2	O-ring
31	D717951086	2	Pin
32	D717951093	2	Plug
33	D717952892	2	Spring
34	D717952976	1	Side cover insert
35	D717952983	1	Retaining plate
36	D717952990	1	Retaining plate

Please check Table of Contents for use of this assembly

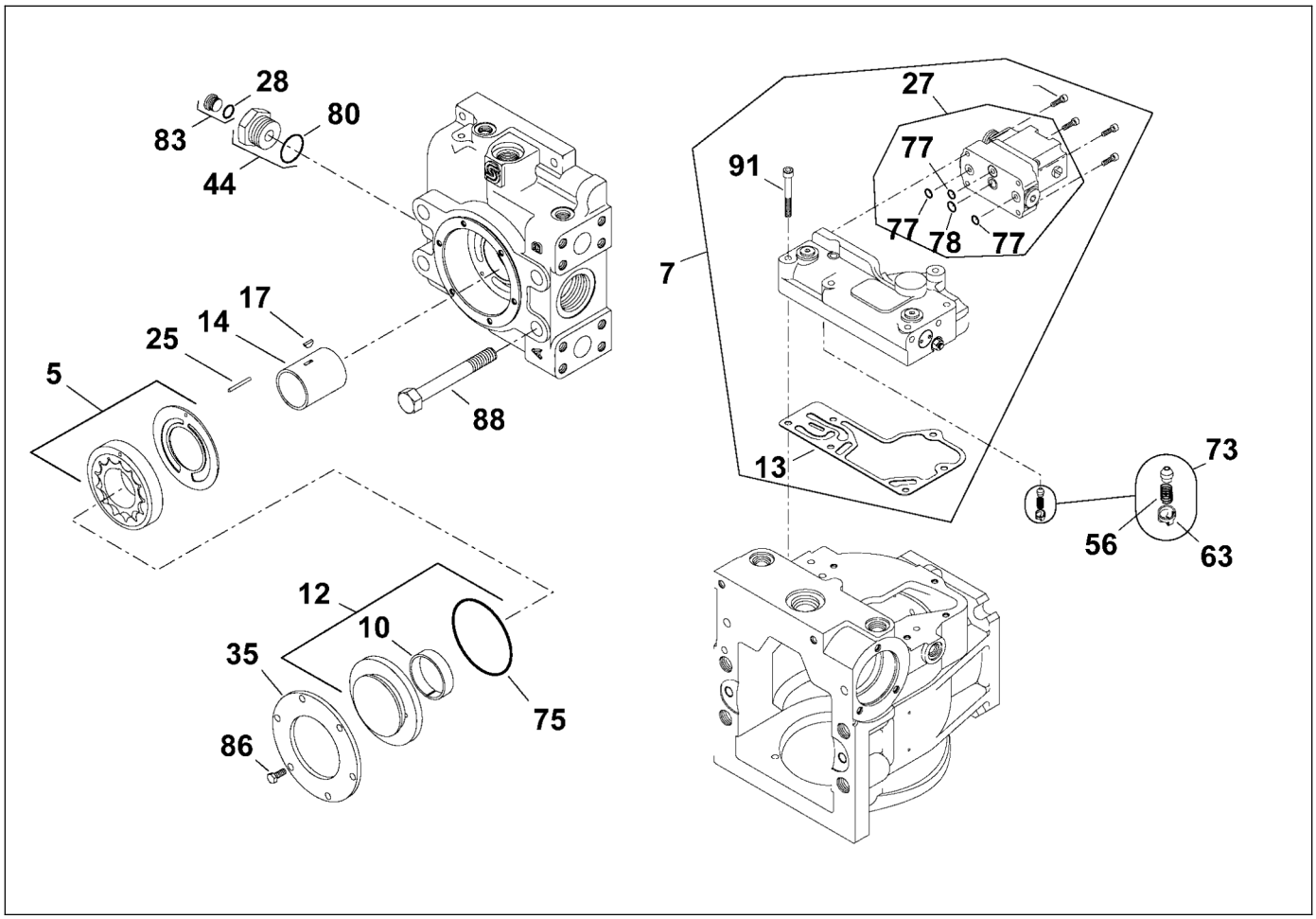

D717191500
Pump, propel rear

Item	Part Number	Quantity	Description
37	D717952997	2	Spring seat
38	D717953004	1	Bearing
39	D717953018	1	Servo arm
40	D717953025	1	Screw
41	D717953032	2	Lip seal
42	D717953067	9	Piston
43	D717953102	12	Screw
44	D717953109	1	Plug
45	D717953284	2	Guide post
46	D717953291	1	Feedback link
47	D717953305	1	Slipper guide
48	D717953319	1	Spring seat
49	D717953326	1	Spring retainer
50	D717953333	1	Spline shaft
51	D717953347	2	Slipper guide bearing
52	D717953354	1	Cage locator link
53	D717953361	1	End cap
54	D717953368	4	Spacer

Please check Table of Contents for use of this assembly

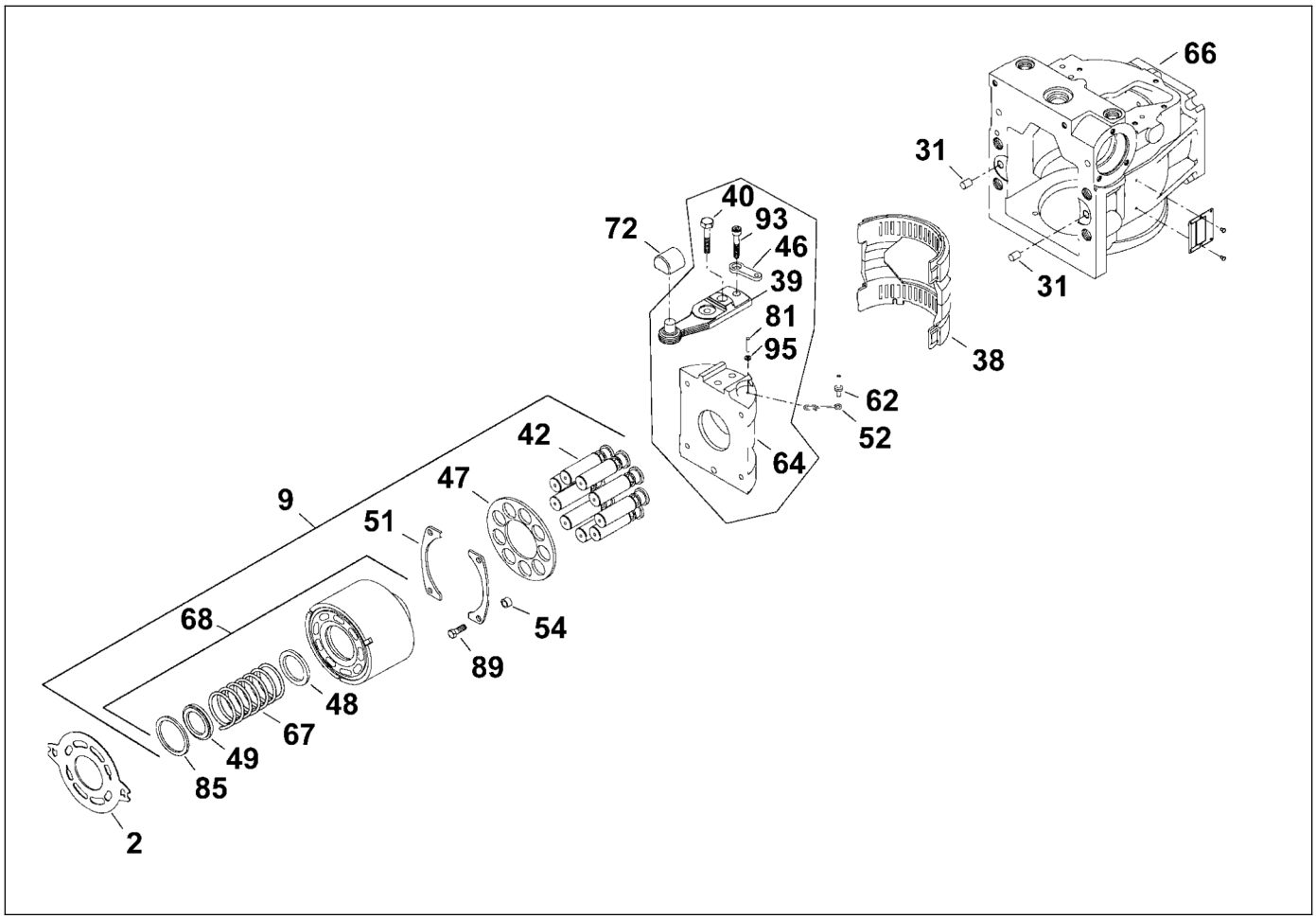

D717191500
Pump, propel rear

Item	Part Number	Quantity	Description
55	D717953389	1	Swash plate
56	D717953410	1	Spring
57	D717953431	2	Piston ring
58	D717953438	2	Check valve
59	D717953452	1	Lifting bracket spacers
60	D717953459	1	Lifting bracket
61	D717953501	2	Shim
62	D717953508	1	Pin
63	D717953515	1	Spring retainer
64	D717953522	1	Variable swash plate
65	D717953529	1	Side cover
66	D717953536	1	Variable housing
67	D717953585	1	Spring
68	D717953613	1	Cylinder block
69	D717953641	1	Servo piston
70	D717953648	1	Leveler
71	D717953669	2	Servo cylinder
72	D717953697	1	Slider block

Please check Table of Contents for use of this assembly

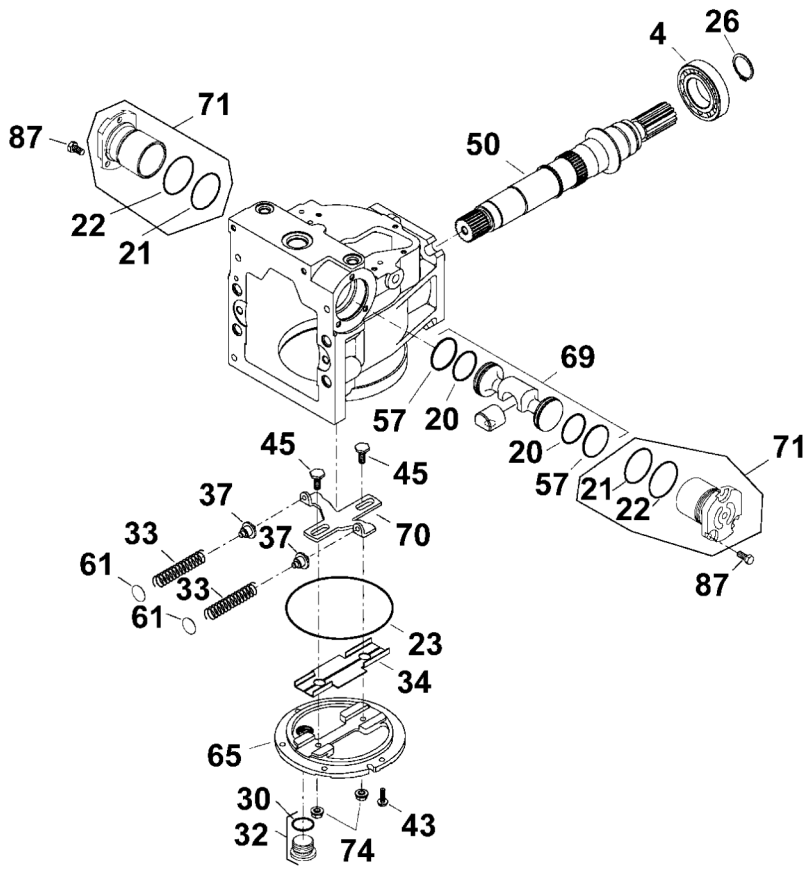

D717191500
Pump, propel rear

Item	Part Number	Quantity	Description
73	D717953858	1	Control orifice kit
74	D717953886	4	Nut
75	D717953907	2	O-ring
76	D717953928	2	O-ring
77	D717953949	6	O-ring
78	D717953956	2	O-ring
79	D717953970	2	O-ring
80	D717953977	2	O-ring
81	D717953998	1	Spiral pin
82	D717954005	3	Plug
83	D717954019	7	Plug
84	D717954026	2	Plug
85	D717954047	1	Retaining ring
86	D717954068	6	Screw
87	D717954075	6	Screw
88	D717954089	4	Screw
89	D717954103	8	Screw
90	D717954110	3	Screw, metric

Please check Table of Contents for use of this assembly

DYNAPAC
Part of the Atlas Copco Group

Please see previous page for drawing.

D717191500
Pump, propel rear

Item	Part Number	Quantity	Description
91	D717954117	6	Screw
92	D717954124	2	Screw
93	D717954152	1	Screw
94	D717954159	1	Washer
95	D717954166	1	Washer
96	D717953865	1	Seal overhaul kit

Please check Table of Contents for use of this assembly

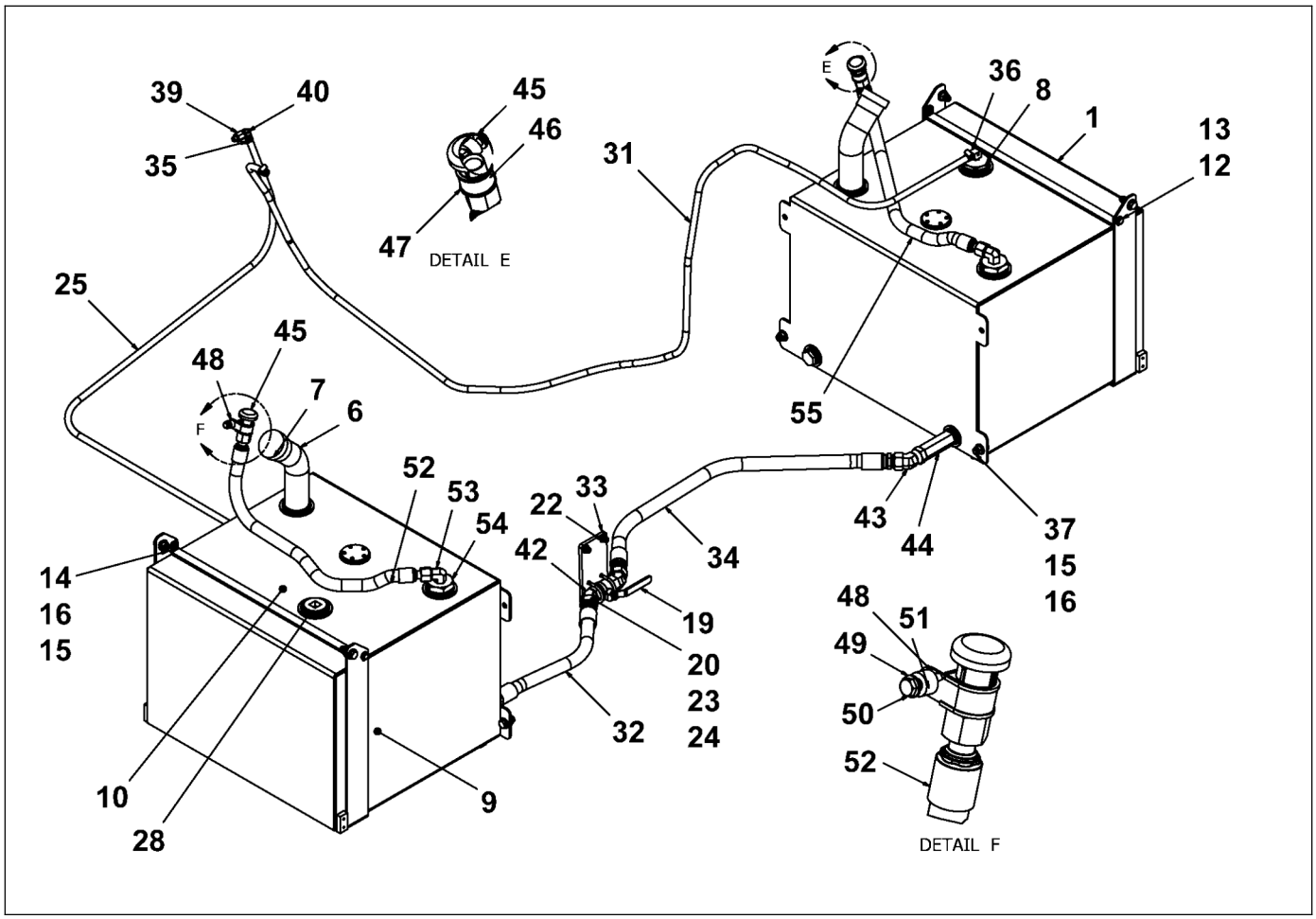

D717083500
Fuel tank

Item	Part Number	Quantity	Description
1	D717083501	2	Fuel tank
2	D717083508	1	Fuel level sending
3	D717083509	2	Gasket
4	D717083510	1	Cover
5	D717083514	4	Plug, 1"
6	D717083516	2	Filler neck
7	D717083521	2	Fuel cap
8	D717083515	1	Plug, 2"
9	D717083526	2	Strap, tank hanging
10	D717083527	2	Tank clamp
11	D717083529	6	Pad, cork tank strap
12	D717801044	6	Narrow washer, 0.38"
13	D717800617	4	Screw, 3/8"
14	D717800736	4	Screw, 1/2"
15	D717801086	16	Flat washer, 0.5"
16	D717800862	8	Lock nut, 1/2"
17	D717083532	1	Adapter
18	D717083530	1	Plug, 1"

Please check Table of Contents for use of this assembly

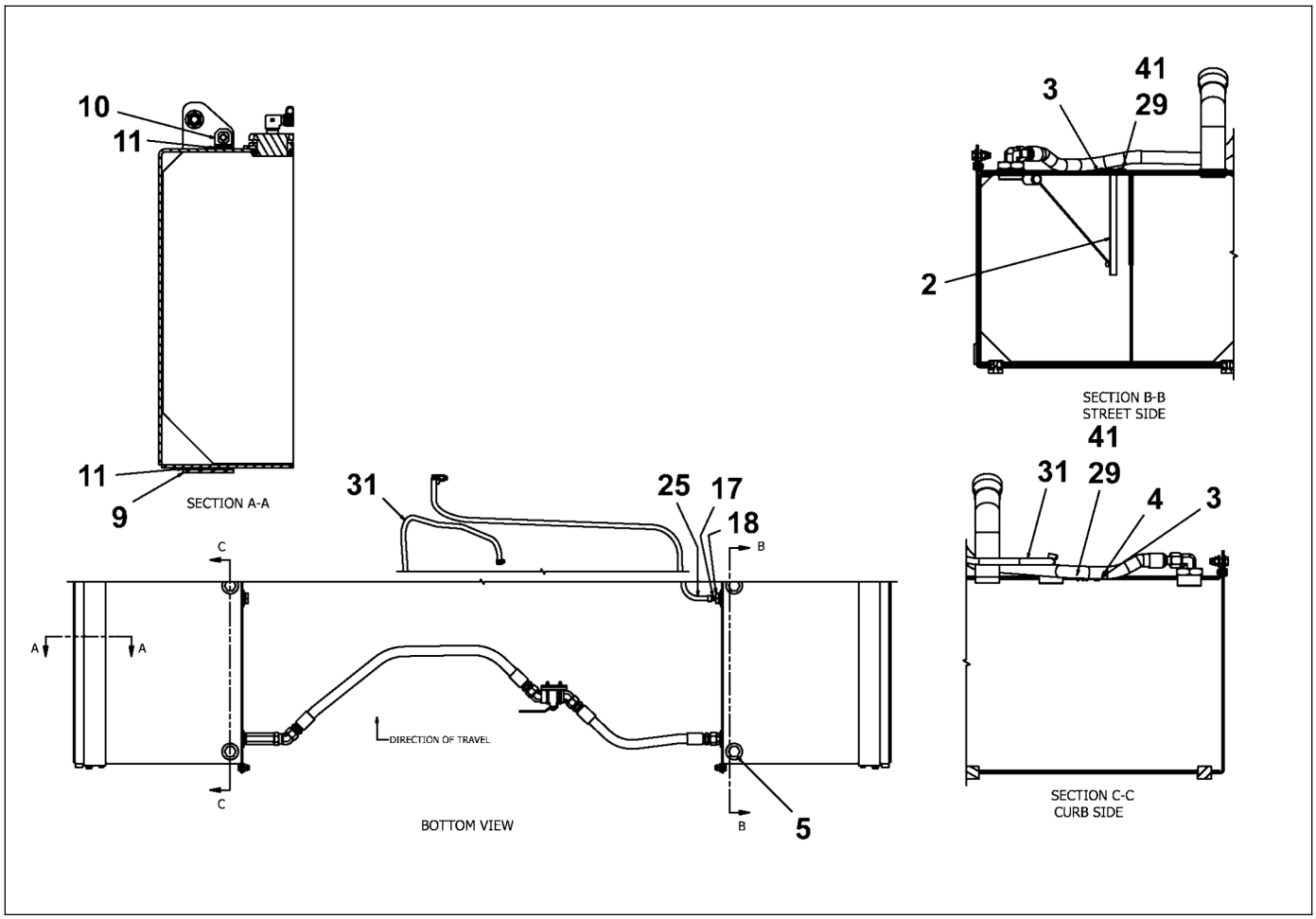

D717083500
Fuel tank

Item	Part Number	Quantity	Description
19	D717083534	1	Valve
20	D717083019	2	U-bolt
22	D717800834	2	Lock nut, 3/8"
23	D717801058	4	Narrow flat washer, 0.25"
24	D717800785	4	Nyloc nut, 1/4"
25	D717083533	1	Fuel supply hose
28	4812200102	1	Plug, square
29	D717801100	10	Washer, #6
30	D717083541	1	Adapter, 1-16
31	D717083537	1	Fuel hose
32	D717083543	1	Fuel tank hose, right
33	D717083018	1	Plate
34	D717083542	1	Fuel tank hose, left
35	D717909516	4	Clamp, worm drive
36	D717083546	1	Hose barb
37	D717800743	4	Screw, 1/2"
39	D717085090	1	Conversion adapter
40	D717083531	1	Elbow

Please check Table of Contents for use of this assembly

DYNAPAC
Part of the Atlas Copco Group

Please see previous page for drawing.

D717083500
Fuel tank

Item	Part Number	Quantity	Description
41	D717801583	10	Screw, M6
42	4812200118	2	Elbow, 16-16
43	4812200116	1	Elbow, 16-16
44	4812200117	1	Adapter, 16-16
45	4812221537	2	Breather vent
46	4812200074	2	Adapter, 12-12
47	4700921050	2	Clamp
48	4812222127	2	Breather holder spacer
49	D717801051	2	Narrow washer, 0.313"
50	D717800554	2	Screw, 5/16"
51	D717801023	2	Hex nut, 5/16"
52	4812221543	1	Air vent hose
53	D717802024	2	Elbow, 12-12
54	4812221548	2	Adapter, 2"-3/4"
55	4812221559	1	Air vent hose

Please check Table of Contents for use of this assembly

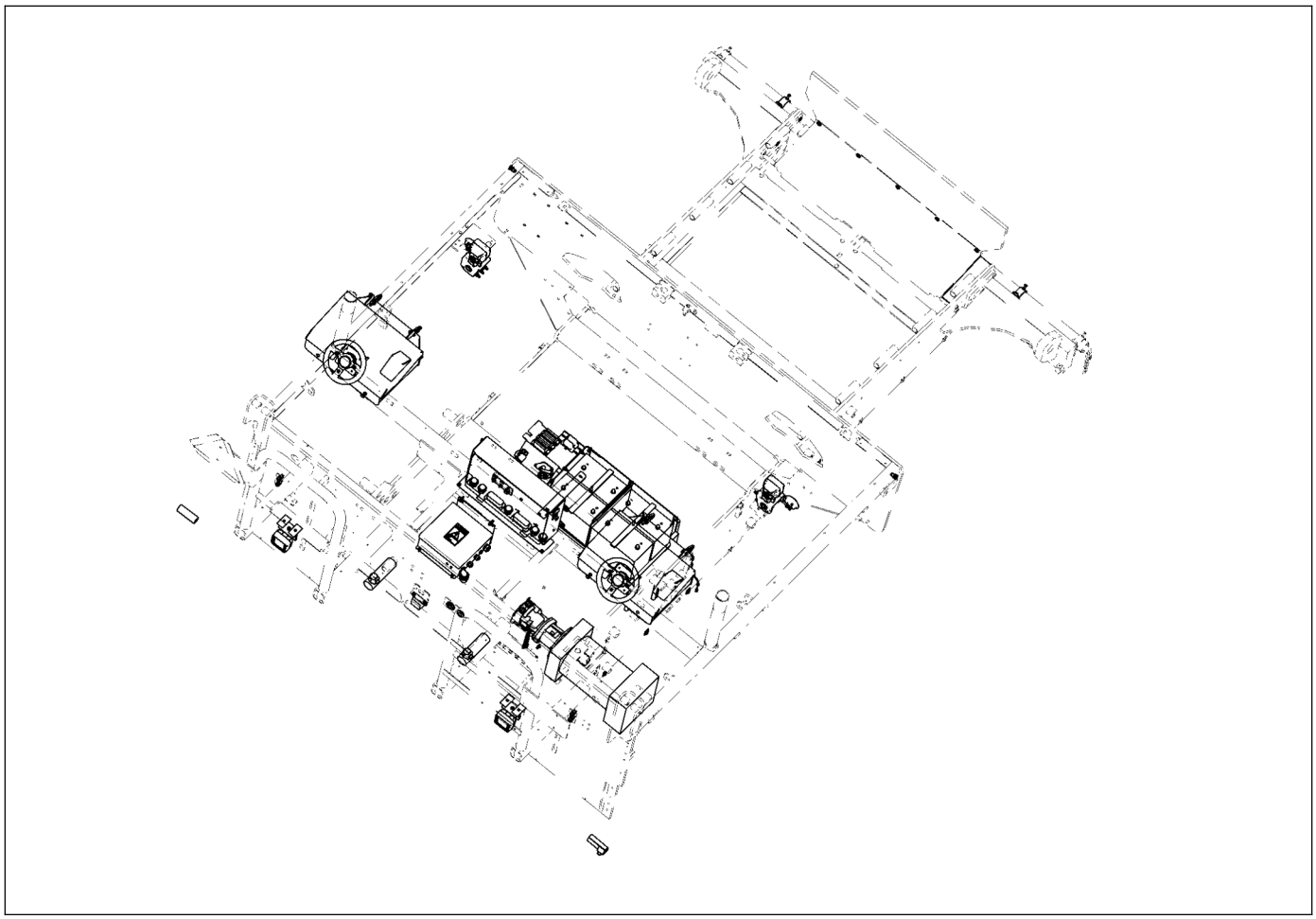

D717100000
Electrical system

Item	Part Number	Quantity	Description	
1	D717103000	1	Operator console lh	X
2	D717103500	1	Operator console rh	X
3	D717100500	1	Generator drive	X
4	D717104000	1	DC control panel	X
5	D717104500	1	AC main panel	X
6	D717104512	1	Bracket, ac main panel	X
11	D717101019	1	Grommet	X
12	D717101020	1	Grommet	X
15	D717101000	1	Engine controls	X
16	D717801051	8	Narrow washer, 0.313"	X
17	D717800554	2	Screw, 5/16"	X
18	D717800827	4	Lock nut, 5/16"	X
19	D717801058	12	Narrow flat washer, 0.25"	X
20	D717800785	6	Nyloc nut, 1/4"	X
21	D717800680	6	Screw, 1/4"	X
22	D717800561	2	Screw, 5/16"	X
28	D717101508	1	Alarm 24V, reverse indication	X

X) Used on machine

Please check Table of Contents for use of this assembly

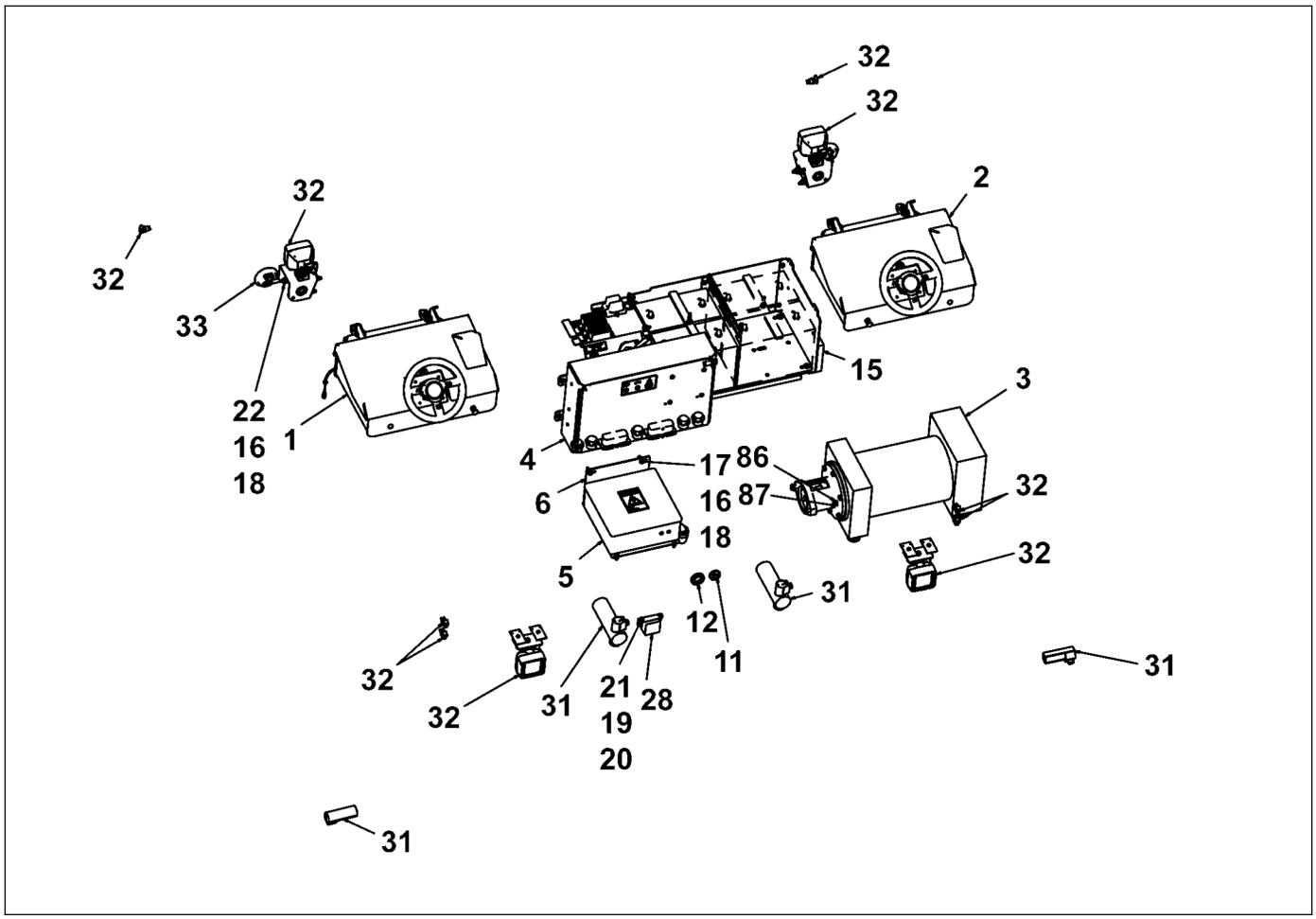

D717100000
Electrical system

Item	Part Number	Quantity	Description	
31	D717102000	1	Auger & conveyor controls, moba	X
32	D717105500	1	Lighting system	X
33	D717101016	2	Horn, disc 24V	X
35	D717101023	1	Harness, ECM	X
36	D717101028	1	Harness, engine CAN	X
37	D717101037	1	Harness, starter - alternator - air	X
38	D717101513	1	Harness, rear functions	X
39	D717101514	1	Harness, front functions	X
40	D717102520	1	Harness, work function controls	X
45	D717101031	1	Cable, starter NEG term to chassis ground	X
52	D717101039	1	Cable, altern. NEG term to engine ground stud	X
53	D717101040	1	Cable, battery, NEG term to X 9	X
55	D717145500	1	Schematic, DC electrical system	X
56	D717146000	1	Schematic, AC electrical system	X
58	D717101055	1	Cable, generator to mainframe	X
59	4812221581	1	Screed replacement plug	X
60	D717905000	1	Auxiliary power panel	X

X) Used on machine

Please check Table of Contents for use of this assembly

DYNAPAC
Part of the Atlas Copco Group

Please see previous page for drawing.

D717100000
Electrical system

Item	Part Number	Quantity	Description	
86	D717801310	1	Washer, 1/4"	X
87	D717800568	1	Screw, 5/16"	X
	4812222082	1	Key replacement kit	

X) Used on machine

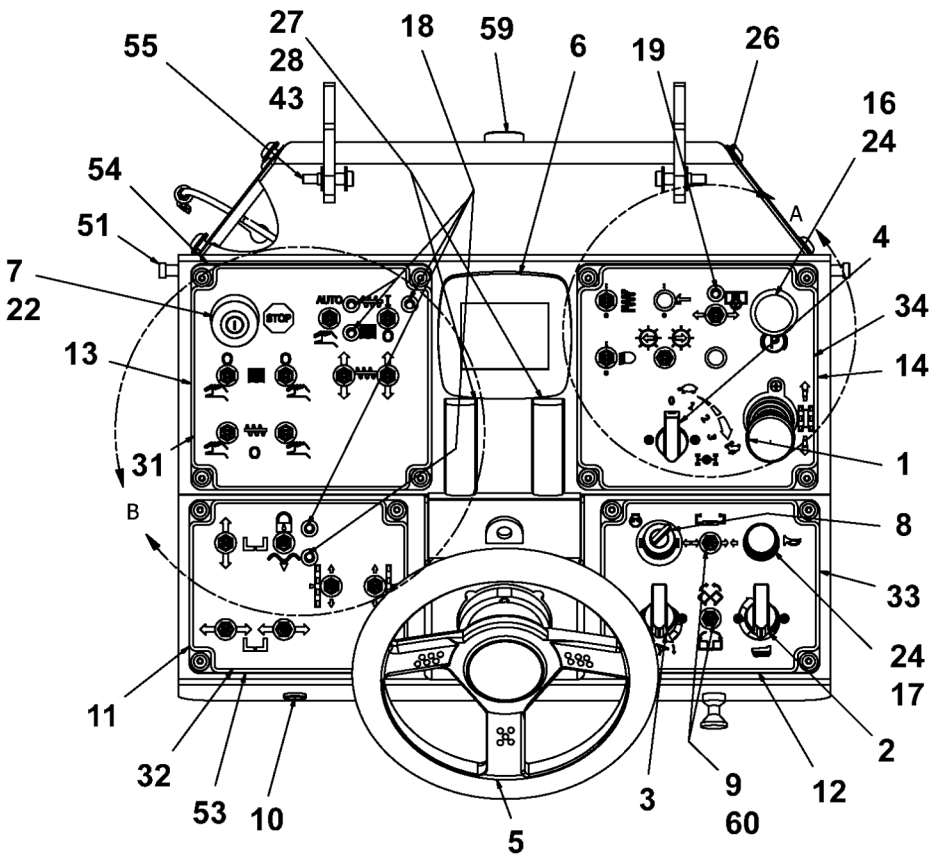

D717103000
Operator console lh

Item	Part Number	Quantity	Description
1	D717113015	1	Operator console
2	D717103013	5	LED, yellow
3	D717101505	1	Steering unit
4	D717101501	1	Controller, propel handle
5	D717103005	1	Plate, switch panel
6	D717103006	1	Plate, switch panel
7	D717103007	1	Plate, switch panel
8	D717103008	1	Plate, switch panel
9	D717101507	1	Display with program
10	D717103002	1	Switch, key ignition
11	D717103009	1	Plate, access panel
12	D717113025	1	Cable, pivot release
13	D717103004	1	Grommet
14	D717101503	1	Controller, steering calibration
15	D717101502	1	Controller, speed dial
16	D717101504	1	Switch, propel mode selection
17	D717103001	1	Push button e-stop
18	D717103003	17	Toggle switch, 7

Please check Table of Contents for use of this assembly

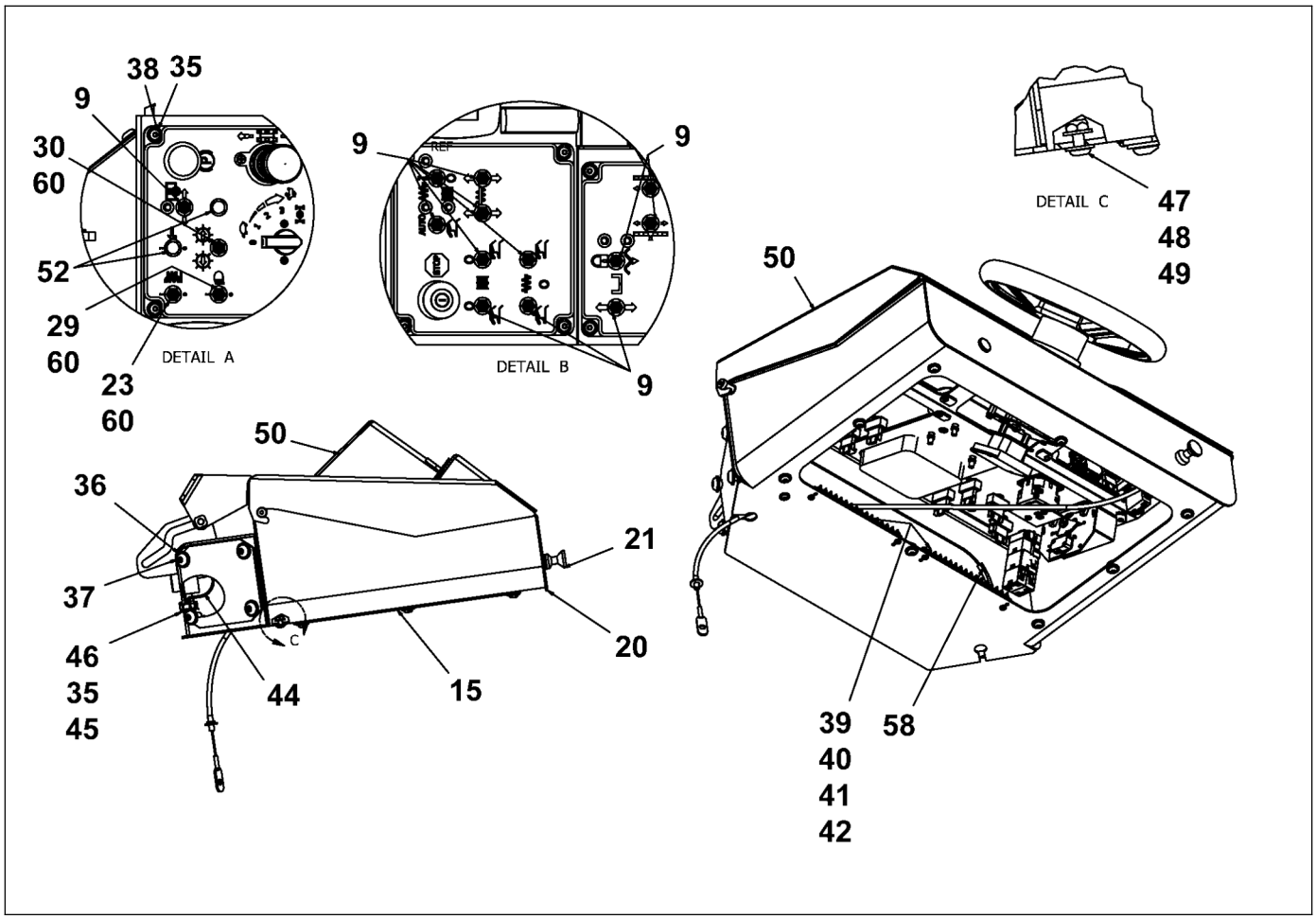

D717103000
Operator console lh

Item	Part Number	Quantity	Description
19	D717103010	1	Push button, parking brake
20	D717103011	1	Push button, horn
21	D717103014	1	LED, green
22	D717103015	1	NC contact, block
23	D717103018	1	Toggle switch, 3
24	D717103016	2	NO contact
25	D717113024	2	Cover, swing arm
26	D717103019	2	Light, dash board
27	D717103020	2	Bulb 24V, dash board light
28	D717103022	1	Toggle switch, 3
29	D717103021	1	Toggle switch, 1
30	D717410006	1	Decal, console lh, upper left
31	D717410007	1	Decal, left console, lower left
32	D717410008	1	Decal, console lh, lower right
33	D717410009	1	Decal, console lh, upper right
34	D717801058	25	Narrow flat washer, 0.25"
35	D717801044	12	Narrow washer, 0.38"
36	D717801268	8	Screw, 3/8"

Please check Table of Contents for use of this assembly

DYNAPAC
Part of the Atlas Copco Group

Please see previous page for drawing.

D717103000
Operator console lh

Item	Part Number	Quantity	Description
37	D717801289	24	Screw, 1/4"
38	D717103025	2	Barrier block
39	D717801100	8	Washer, #6
40	D717800876	4	Lock nut, M6
41	D717800974	4	Screw, M6
42	D717103026	2	Rubber grommet, 5/16"
43	D717801520	1	Cushioned clamp, 1.5"
44	D717800785	1	Nyloc nut, 1/4"
45	D717800687	1	Screw, 1/4"
46	D717801002	1	Hex nut, M10
47	D717801142	2	Washer, 10
48	D717800883	1	Lock nut, M10
49	D717113051	1	Console cover
50	D717103030	2	Shoulder bolt, 3/8"
51	D717101043	2	Nylon hole plug, 7
52	D717103032	2	Switch panel gasket, small
53	D717103033	2	Switch panel gasket, large
54	D717103034	2	Shoulder bolt, 3/8"

Please check Table of Contents for use of this assembly

DYNAPAC
Part of the Atlas Copco Group

Please see previous page for drawing.

D717103000
Operator console lh

Item	Part Number	Quantity	Description
55	D717103027	1	Wiring diagram, left console
56	D717103028	1	Harness, left console to DC box
57	D717103035	1	Alarm, electric
58	D717103029	1	Edge protector
59	D717103036	20	Toggle switch boot
60	D717801422	1	Clamp, cushioned
61	D717800855	1	Lock nut, 1/4"

Please check Table of Contents for use of this assembly

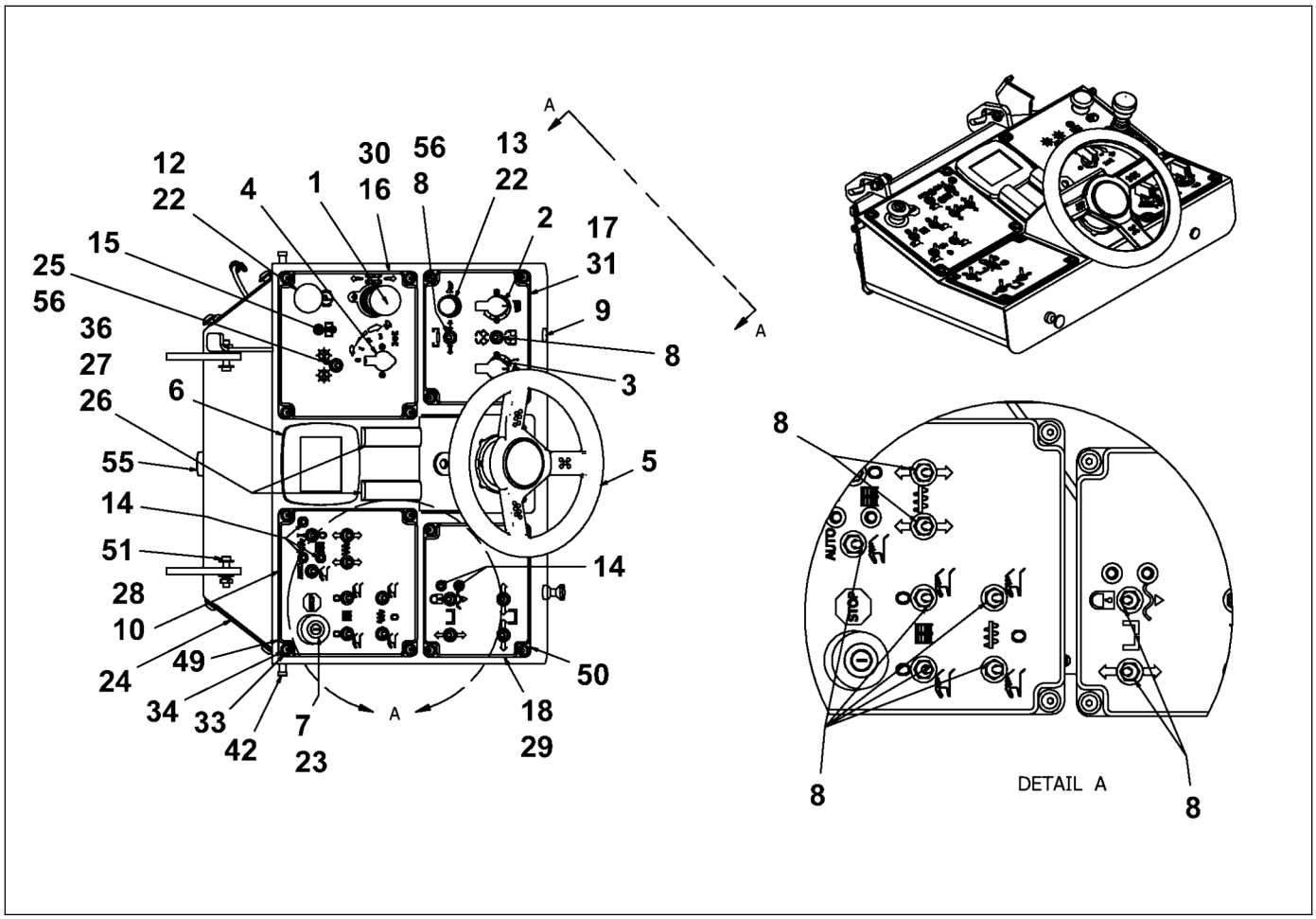

D717103500
Operator console rh

Item	Part Number	Quantity	Description
1	D717101501	1	Controller, propel handle
2	D717101502	1	Controller, speed dial
3	D717101503	1	Controller, steering calibration
4	D717101504	1	Switch, propel mode selection
5	D717101505	1	Steering unit
6	4812200007	1	Display, with program
7	D717103001	1	Push button e-stop
8	D717103003	14	Toggle switch, 7
9	D717103004	1	Grommet
10	D717103007	1	Plate, switch panel
11	D717103009	1	Plate, access panel
12	D717103010	1	Push button, parking brake
13	D717103011	1	Push button, horn
14	D717103013	5	LED, yellow
15	D717103014	1	LED, green
16	D717103501	1	Plate, switch panel
17	D717103502	1	Plate, switch panel
18	D717103503	1	Plate, access panel

Please check Table of Contents for use of this assembly

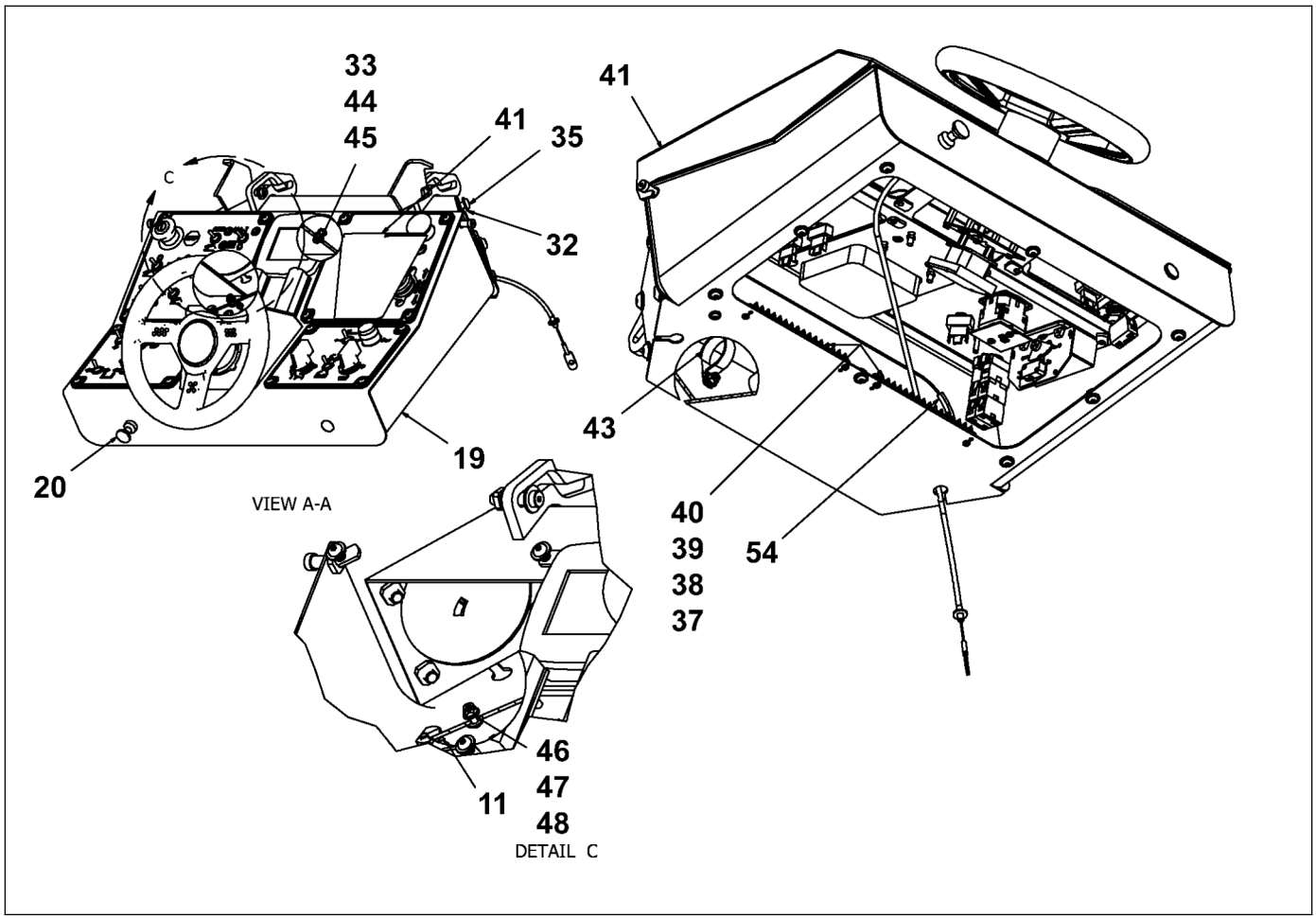

D717103500
Operator console rh

Item	Part Number	Quantity	Description
19	D717113015	1	Operator console
20	D717113025	2	Cable, pivot release
21	D717801142	2	Washer, 10
22	D717103016	2	NO contact
23	D717103015	1	NC contact, block
24	D717113024	1	Cover, swing arm
25	D717103021	1	Toggle switch, 1
26	D717103019	2	Light, dash board
27	D717103020	2	Bulb 24V, dash board light
28	D717410006	1	Decal, console lh, upper left
29	D717410010	1	Decal, right console, lower left
30	D717410011	1	Decal, console rh, upper right
31	D717410012	1	Decal, console rh, lower right
32	D717801044	12	Narrow washer, 0.38"
33	D717801058	25	Narrow flat washer, 0.25"
34	D717801289	24	Screw, 1/4"
35	D717801268	8	Screw, 3/8"
36	D717103026	2	Rubber grommet, 5/16"

Please check Table of Contents for use of this assembly

DYNAPAC
Part of the Atlas Copco Group

Please see previous page for drawing.

D717103500
Operator console rh

Item	Part Number	Quantity	Description
37	D717103025	2	Barrier block
38	D717801100	8	Washer, #6
39	D717800876	4	Lock nut, M6
40	D717800974	4	Screw, M6
41	D717113051	1	Console cover
42	D717103030	2	Shoulder bolt, 3/8"
43	D717801520	1	Cushioned clamp, 1.5"
44	D717800687	1	Screw, 1/4"
45	D717800855	1	Lock nut, 1/4"
46	D717800883	1	Lock nut, M10
47	D717801142	2	Washer, 10
48	D717801002	1	Hex nut, M10
49	D717103033	2	Switch panel gasket, large
50	D717103032	2	Switch panel gasket, small
51	D717103034	2	Shoulder bolt, 3/8"
52	D717103504	1	Wiring diagram, right console
53	D717103505	1	Harness, right console to DC box
54	D717103029	1	Edge protector

Please check Table of Contents for use of this assembly

DYNAPAC
Part of the Atlas Copco Group

Please see previous page for drawing.

D717103500
Operator console rh

Item	Part Number	Quantity	Description
55	D717103035	1	Alarm, electric
56	D717103036	15	Toggle switch boot
58	D717103029	1	Edge protector
59	D717103035	1	Alarm, electric
60	D717103036	15	Toggle switch boot

Please check Table of Contents for use of this assembly

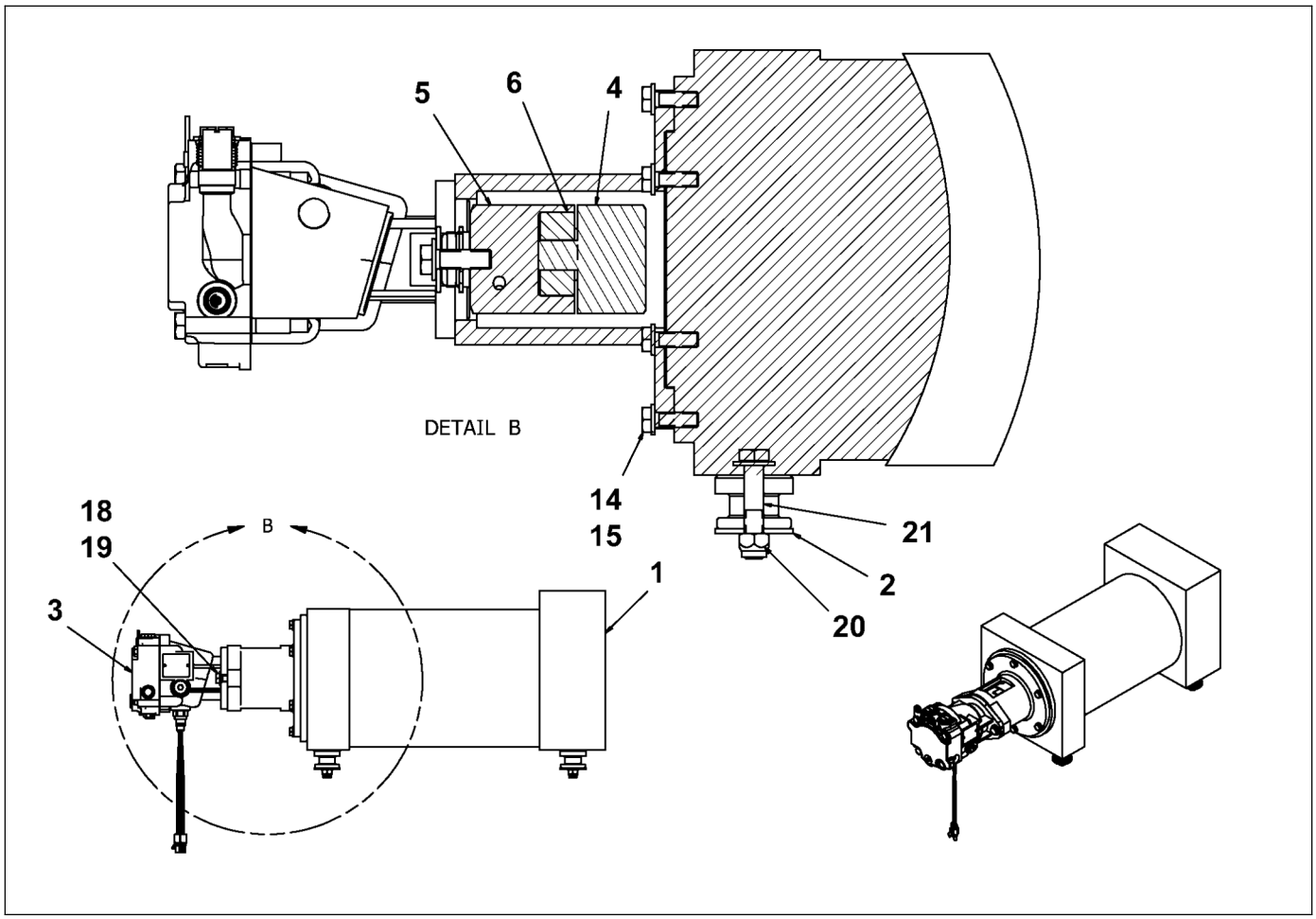

D717100500
Generator drive

Item	Part Number	Quantity	Description
1	D717100501	1	Generator
2	D717100505	4	Mount, generator isolator
3	D717100506	1	Motor, hydraulic
4	D717100502	1	Coupling, 35mm
5	4812200085	1	Coupling, splined
6	4812200086	1	Coupling, spider
14	D717801135	6	Washer, 10mm
15	D717800484	6	Screw, M10
18	D717801086	6	Flat washer, 0.5"
19	D717800736	2	Screw, 1/2"
20	D717800862	4	Lock nut, 1/2"
21	D717800708	4	Screw, 1/2"
22	4812200229	1	Conduit hub
23	4812200230	1	Elbow, 1"
25	4700904639	1	Washer, M6
27	4700500012	1	Capscrew, M6

Please check Table of Contents for use of this assembly

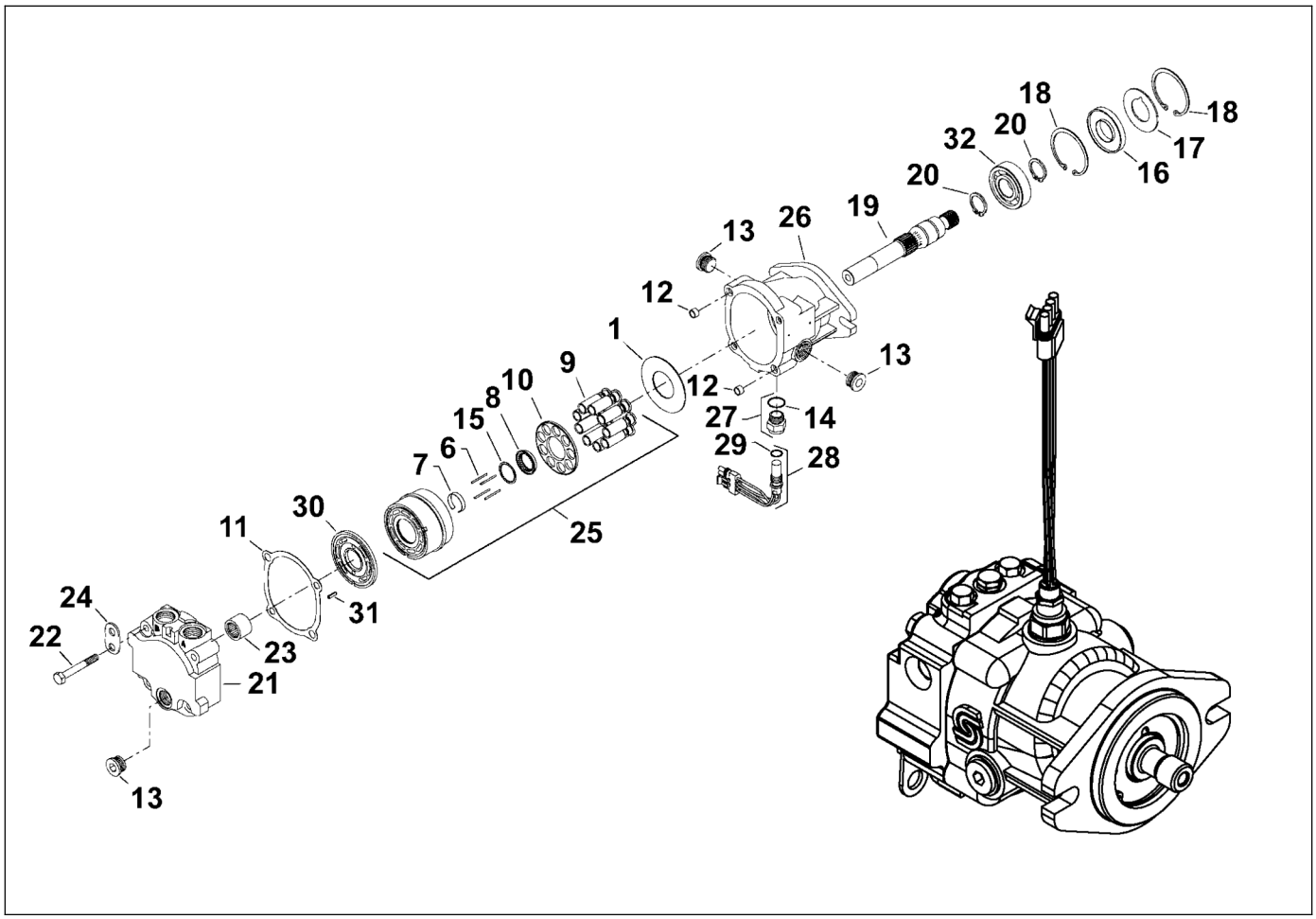

D717100506
Motor, hydraulic

Item	Part Number	Quantity	Description
1	D717954614	1	Thrust plate
2	D717954642	1	Washer
3	D717954271	1	Cylinder block spring
4	D717954278	1	Cylinder block spring retainer
5	D717954432	1	Retaining spring
6	D717954502	4	Hold-down pin slipper
7	D717954313	1	Hold-down pin retainer
8	D717954530	1	Slipper retainer guide
9	D717954404	9	Piston
10	D717954516	1	Slipper retainer
11	D717954306	2	End cap gasket
12	D717954586	2	Spring pin
13	D717954544	3	Plug
14	D717951072	8	O-ring
15	D717954621	1	Thrust washer
16	D717954348	2	Lip seal
17	D717954593	1	Support washer
18	D717954425	2	Retaining ring

Please check Table of Contents for use of this assembly

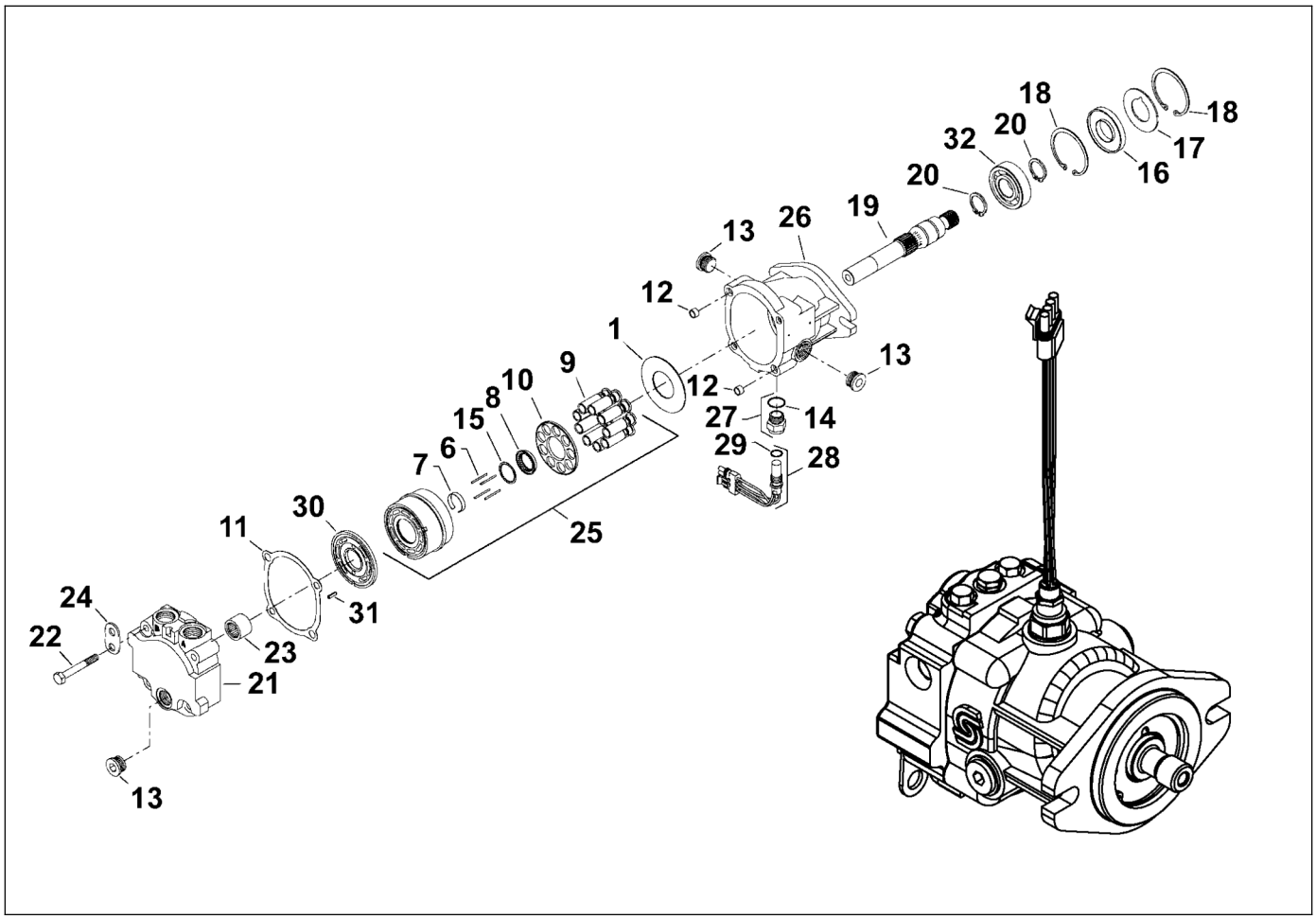

D717100506
Motor, hydraulic

Item	Part Number	Quantity	Description
19	D717954488	1	Shaft
20	D717950638	2	Retaining ring
21	D717954285	1	End cap
22	D717954446	4	Screw
23	D717954435	1	Needle bearing
24	D717953459	1	Lifting bracket
25	D717954264	1	Cylinder block kit with speed ring
26	D717954299	1	Fixed housing
27	D717954215	1	Adapter assembly
28	D717954551	1	Speed sensor
29	D717951065	2	O-ring
30	D717954628	1	Valve plate
31	D717954537	1	Slotted pin
32	D717954236	1	Ball bearing
33	D717954383	1	Overhaul seal kit

Please check Table of Contents for use of this assembly

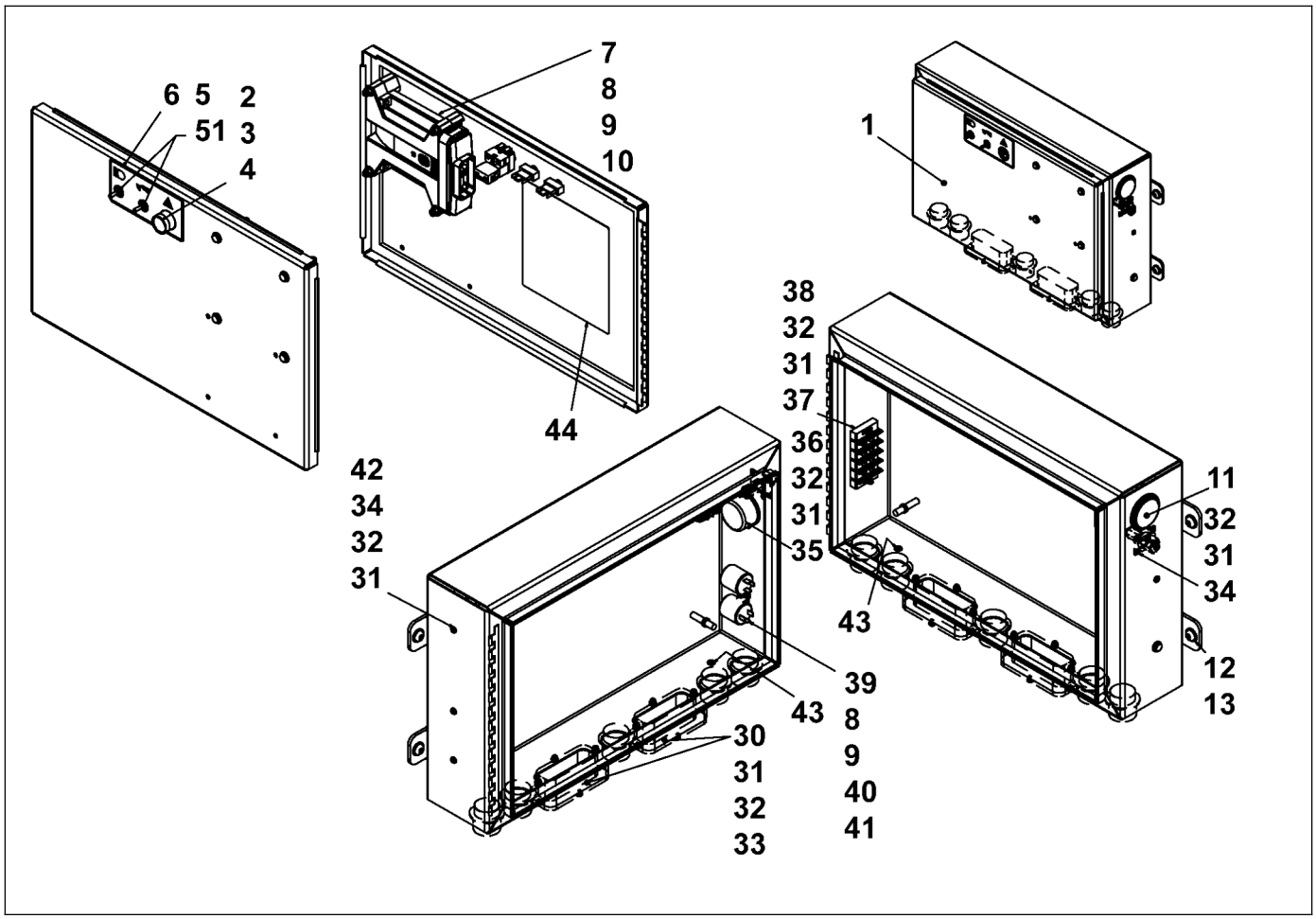

D717104000
DC control panel

Item	Part Number	Quantity	Description
1	D717104001	1	Enclosure
2	D717101506	2	Controller, propel system
3	D717104003	8	Relay base
4	D717104004	8	Diode, relay surge protection
5	D717104006	3	Relay latch
6	D717104007	3	Base, latch relay
7	D717801044	4	Narrow washer, 0.38"
8	D717104040	5	Din rail slotted
9	D717104005	8	Relay, 24V
10	D717101007	1	Hour meter
11	D717104029	30	Block terminal, 2-wire
12	D717104011	1	Push button, warning lights
13	D717103018	2	Toggle switch, 3
14	D717104017	10	End stop, terminal block
15	D717104016	46	Terminal block, 4-wire
16	D717104023	13	End plate, 4-wire terminal block
17	D717103016	1	NO contact
18	D717103017	1	Maintained action block

Please check Table of Contents for use of this assembly

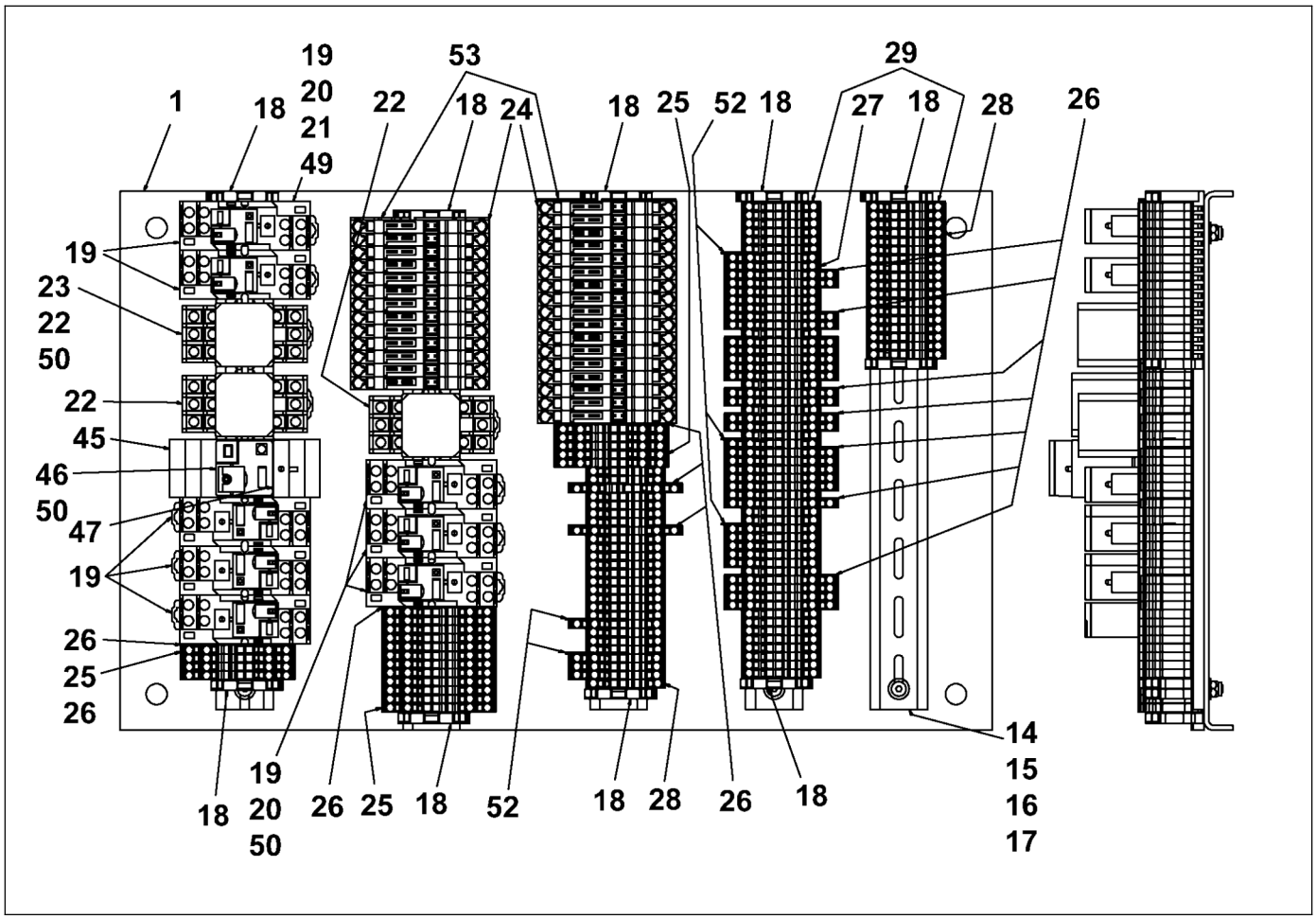

D717104000
DC control panel

Item	Part Number	Quantity	Description
19	D717410013	1	Decal, dc control panel
20	D717801275	4	Screw, 3/8"
21	D717801142	20	Washer, 10
22	D717800883	10	Lock nut, M10
23	D717104014	59	Terminal block, 2-wire
24	D717104015	16	Terminal block. 3-wire
25	D717104021	2	End plate, 2-wire terminal block
26	D717801016	10	Screw, M10
27	D717801058	18	Narrow flat washer, 0.25"
28	D717800785	9	Nyloc nut, 1/4"
29	D717800666	8	Screw, 1/4"
30	D717104035	2	Spacer, duetsch connector
31	D717801093	28	Washer, 0.164"
32	D717800869	17	Lock nut, M8
33	D717800960	8	Screw, M8
34	D717800953	5	Screw, M8
35	D717101515	1	Inclinometer
36	D717800946	2	Hex nut, M8

Please check Table of Contents for use of this assembly

DYNAPAC
Part of the Atlas Copco Group

Please see previous page for drawing.

D717104000
DC control panel

Item	Part Number	Quantity	Description
37	D717104037	1	Barrier block
38	D717800967	2	Hex nut, M8
39	D717104010	2	Flasher, 24V
40	D717104038	2	P clamp, 1.25"
41	D717800687	1	Screw, 1/4"
42	D717104039	1	Relay, 80A
43	D717103026	2	Rubber grommet, 5/16"
44	D717410022	1	Decal, fuse list
45	D717104042	1	Relay base, 24V
46	D717104041	1	Relay, 24V
47	D717104008	1	Surge protect diode
48	D717104036	1	Wiring diagram, DC control
49	D717104012	8	Clip hold down, control relay
50	D717104013	4	Clip hold down, latch relay
51	D717103036	2	Toggle switch boot
52	D717104022	5	End plate, 3-wire terminal block
53	D717104033	2	End plate, 2 wire fuse block

Please check Table of Contents for use of this assembly

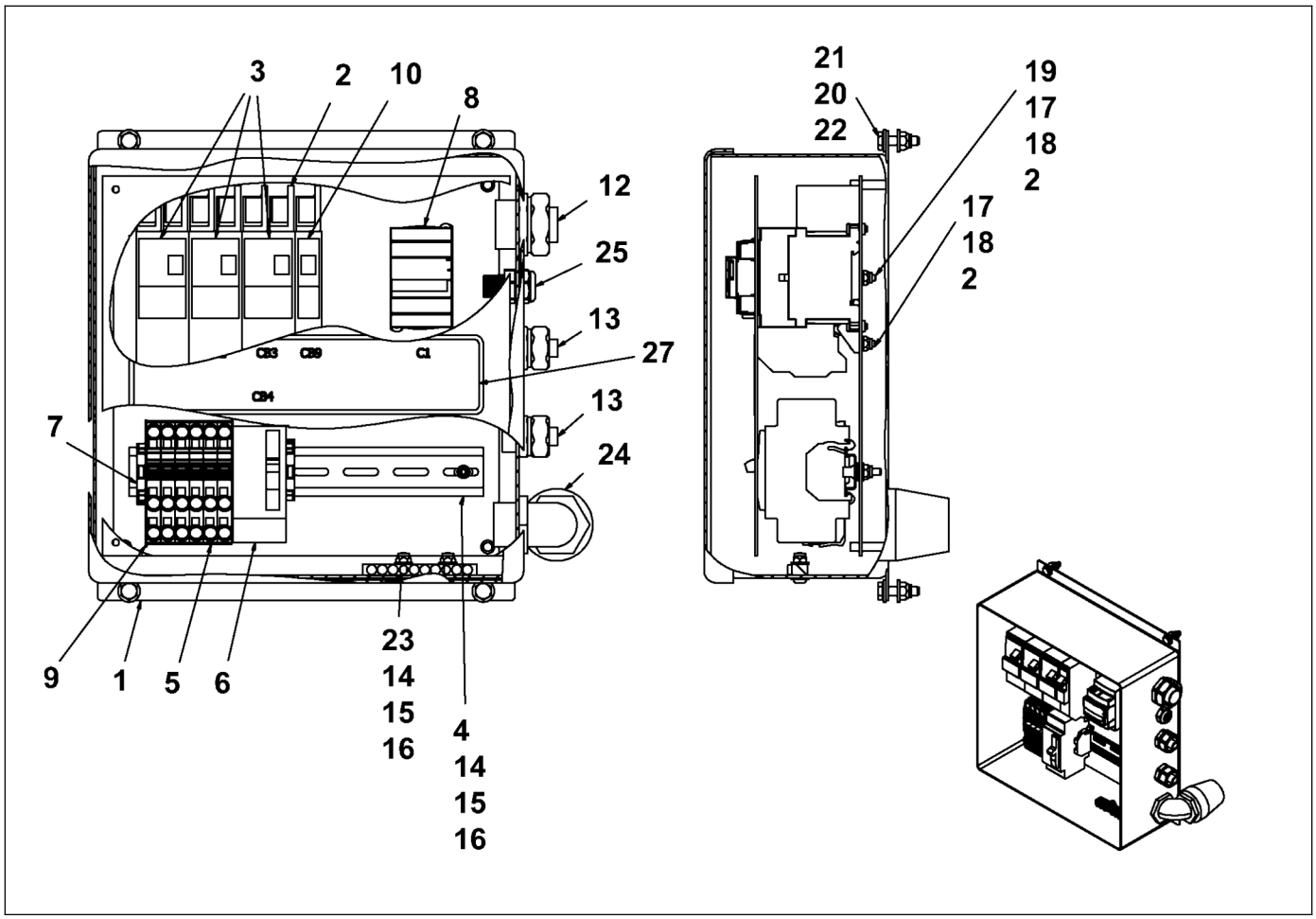

D717104500
AC main panel

Item	Part Number	Quantity	Description
1	D717104506	1	Box
2	D717104505	7	Pad, mounting GFCI circuit breacker
3	D717104503	3	Breaker main
4	D717905006	1	Din rail
5	D717104508	6	Terminal block, 3-wire
6	D717104504	1	Circuit breaker
7	D717104017	2	End stop, terminal block
8	D717104507	1	Contactor, 18A
9	D717104509	1	End cover, terminal block
10	D717104511	1	Breaker main, 15A
12	D717104515	1	Fitting straight, 1"
13	D717104516	2	Fitting straight, 1/2"
14	D717801142	6	Washer, 10
15	D717800883	2	Lock nut, M10
16	D717801009	2	Hex nut, M10
17	D717801093	28	Washer, 0.164"
18	D717800869	14	Lock nut, M8
20	D717801058	8	Narrow flat washer, 0.25"

Please check Table of Contents for use of this assembly

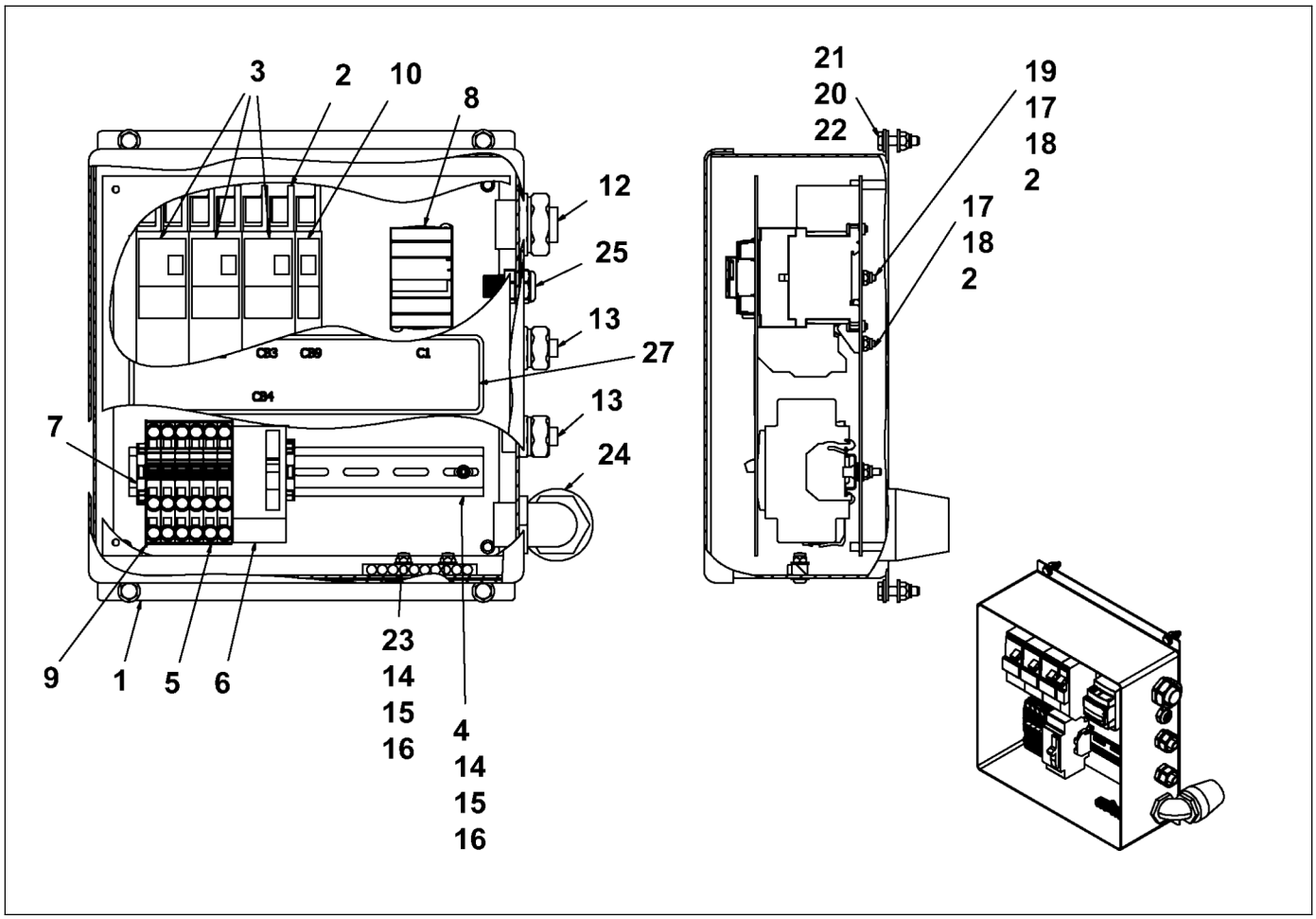

D717104500
AC main panel

Item	Part Number	Quantity	Description
21	D717800834	4	Lock nut, 3/8"
22	D717800680	4	Screw, 1/4"
23	D717104517	1	Bar, solid neutral
24	D717104518	1	Elbow, 1"
25	D717104519	1	Cord grip
26	D717104523	1	Wiring diagram, AC main panel
27	D717410029	1	Decal, AC main panel
28	D717800953	16	Screw, M8
29	4812222578	2	Hex screw, 10
30	4812222579	2	Hex lock nut, 10
33	D717104522	1	Harness, AC main panel to fume extractor
34	D717104520	1	Harness, generator to AC panel

Please check Table of Contents for use of this assembly

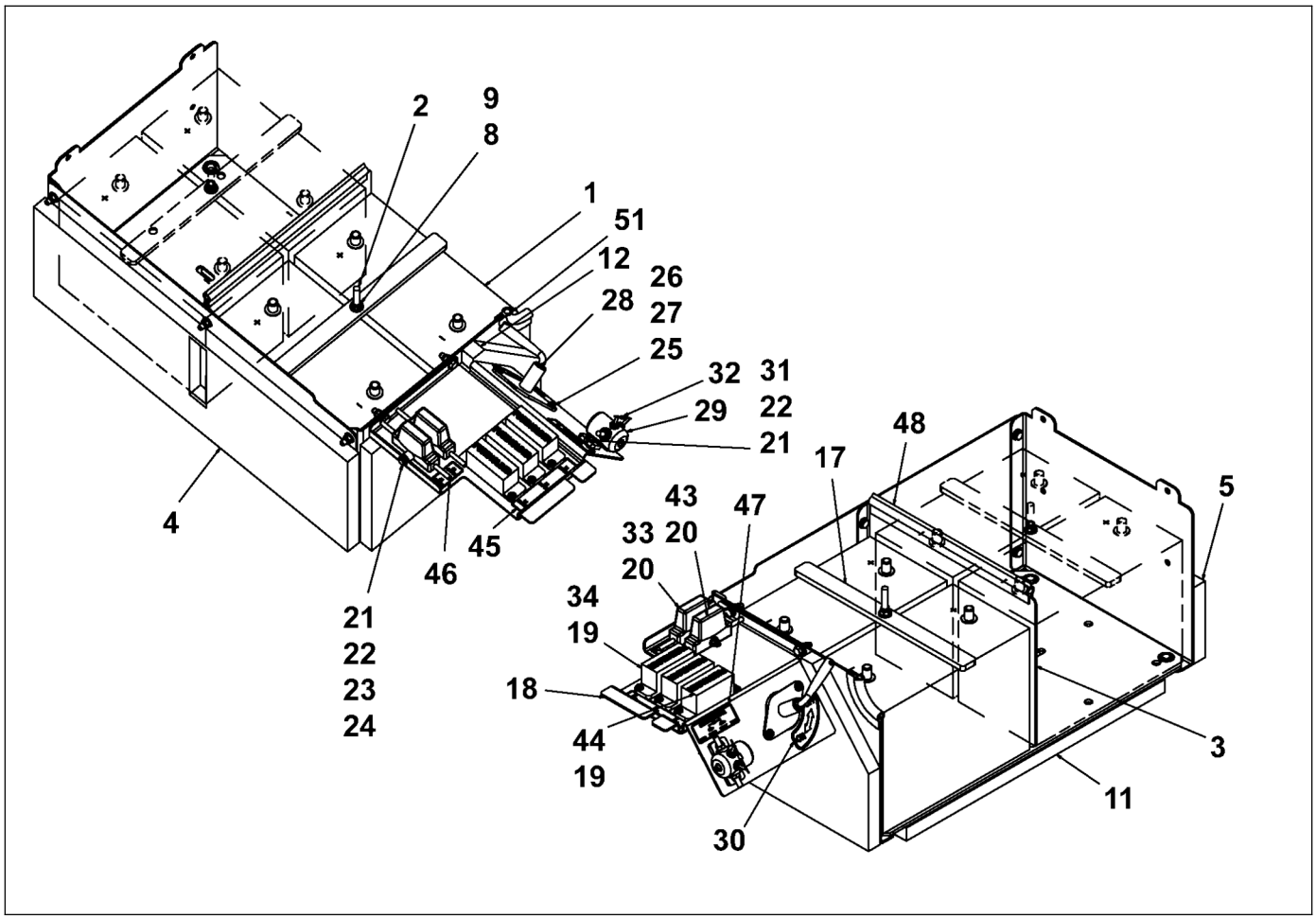

D717101000
Engine controls

Item	Part Number	Quantity	Description
1	D717101001	2	Battery
2	D717101008	1	J-bolt, 3/8"
3	D717101012	1	Partition
4	D717111544	1	Insulation pad, battery box, front
5	D717111571	1	Insulation pad, battery box, side
6	D717801051	20	Narrow washer, 0.313"
7	D717800827	8	Lock nut, 5/16"
8	D717801044	2	Narrow washer, 0.38"
9	D717800834	2	Lock nut, 3/8"
10	D717800561	12	Screw, 5/16"
11	D717111578	1	Insulation pad, battery bottom
12	D717111586	1	Insulation pad, battery box, lh side
13	D717101003	1	Floor, battery box
14	D717101004	1	Side, battery box
15	D717101021	1	Side, battery box
16	D717101022	1	Side, battery box, lh
17	D717101009	1	Crossbar, battery tie down
18	D717104009	1	Bracket, battery switch, fuse

Please check Table of Contents for use of this assembly

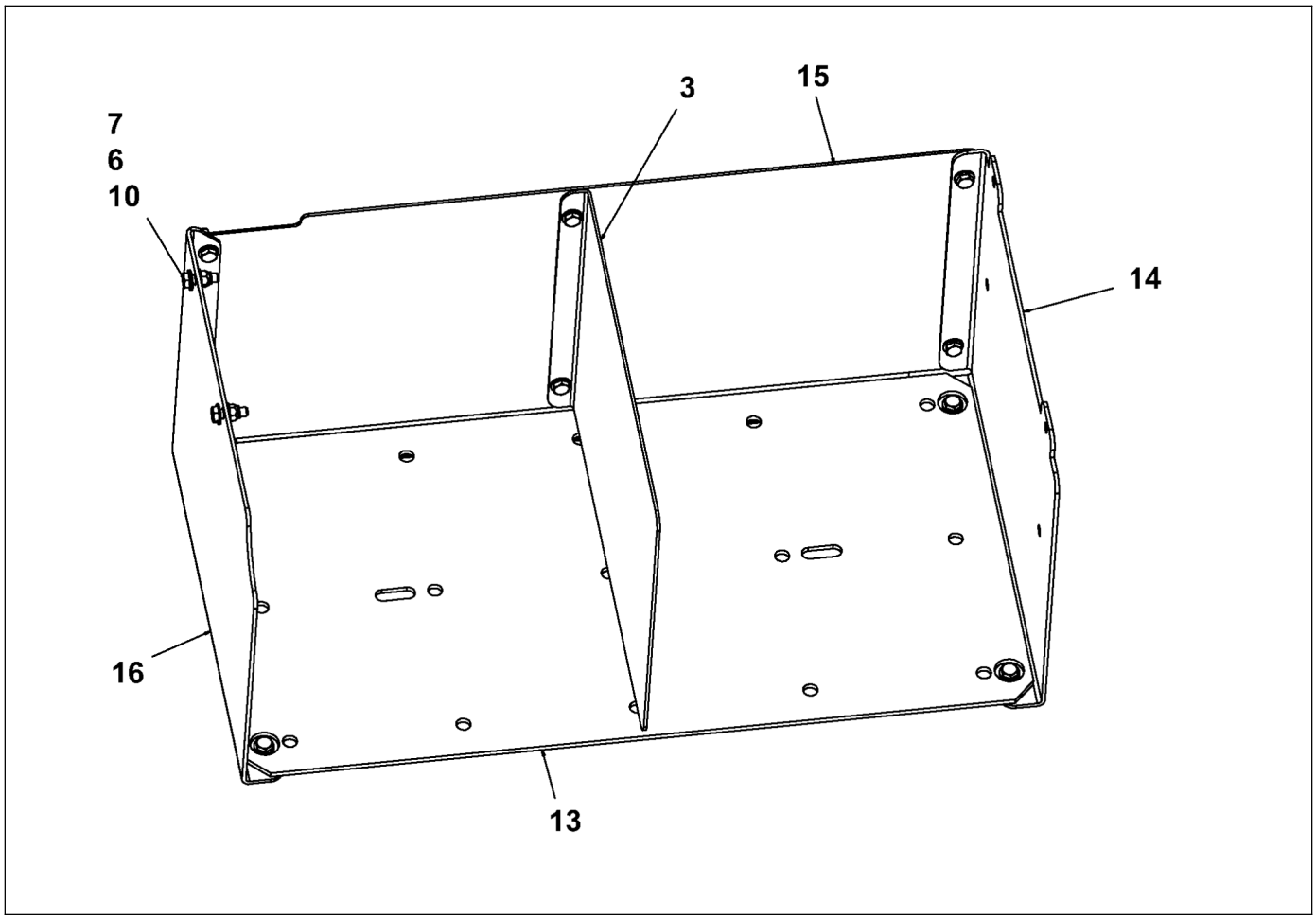

D717101000
Engine controls

Item	Part Number	Quantity	Description
19	D717101010	3	Fuseholder, battery box
20	D717101018	2	Fuseholder, inline
21	D717800855	3	Lock nut, 1/4"
22	D717801058	7	Narrow flat washer, 0.25"
23	D717101044	2	Spacer, fuse holder
24	D717801618	1	Screw, 1/4"
25	D717800897	8	Lock nut, M10
26	D717801240	8	Screw, M10
27	D717801142	16	Washer, 10
28	D717101011	1	Switch, battery disconnect
29	D717101013	1	Relay starter solenoid
30	D717410014	1	Decal, battery disconnect
31	D717801296	2	Screw, 1/4"
32	D717101015	1	Diode
33	D717101045	1	Fuse, 30A
34	D717101046	1	Fuse, 100A
35	D717101029	1	Cable, battery, pos term to neg term
36	D717101030	1	Cable, battery, pos term to bat disc sw

Please check Table of Contents for use of this assembly

DYNAPAC
Part of the Atlas Copco Group

Please see previous page for drawing.

D717101000
Engine controls

Item	Part Number	Quantity	Description
37	D717101032	1	Cable, battery disc sw to F1 fuse
38	D717101033	1	Cable, battery disc sw to F2 fuse
39	D717101034	1	Cable, battery disc sw to F4 fuse
40	D717101035	2	Cable, F1 fuse to F3 fuse
41	D717101036	1	Cable, F3 fuse to X8
42	D717101038	1	Cable, F1 fuse to R1 (starter relay) contact
43	D717101047	1	Fuse, 50A
44	D717101048	1	Fuse, 125A
45	D717410024	1	Decal, fuse holder
46	D717410025	1	Decal, fuse holder
47	D717410026	1	Decal, starter relay
48	D717101051	1	Edge trim
49	D717101052	1	Cable, F7 fuse to R1 starter relay
50	D717101049	1	Harness, alternator-air
51	D717101054	1	Edge guard

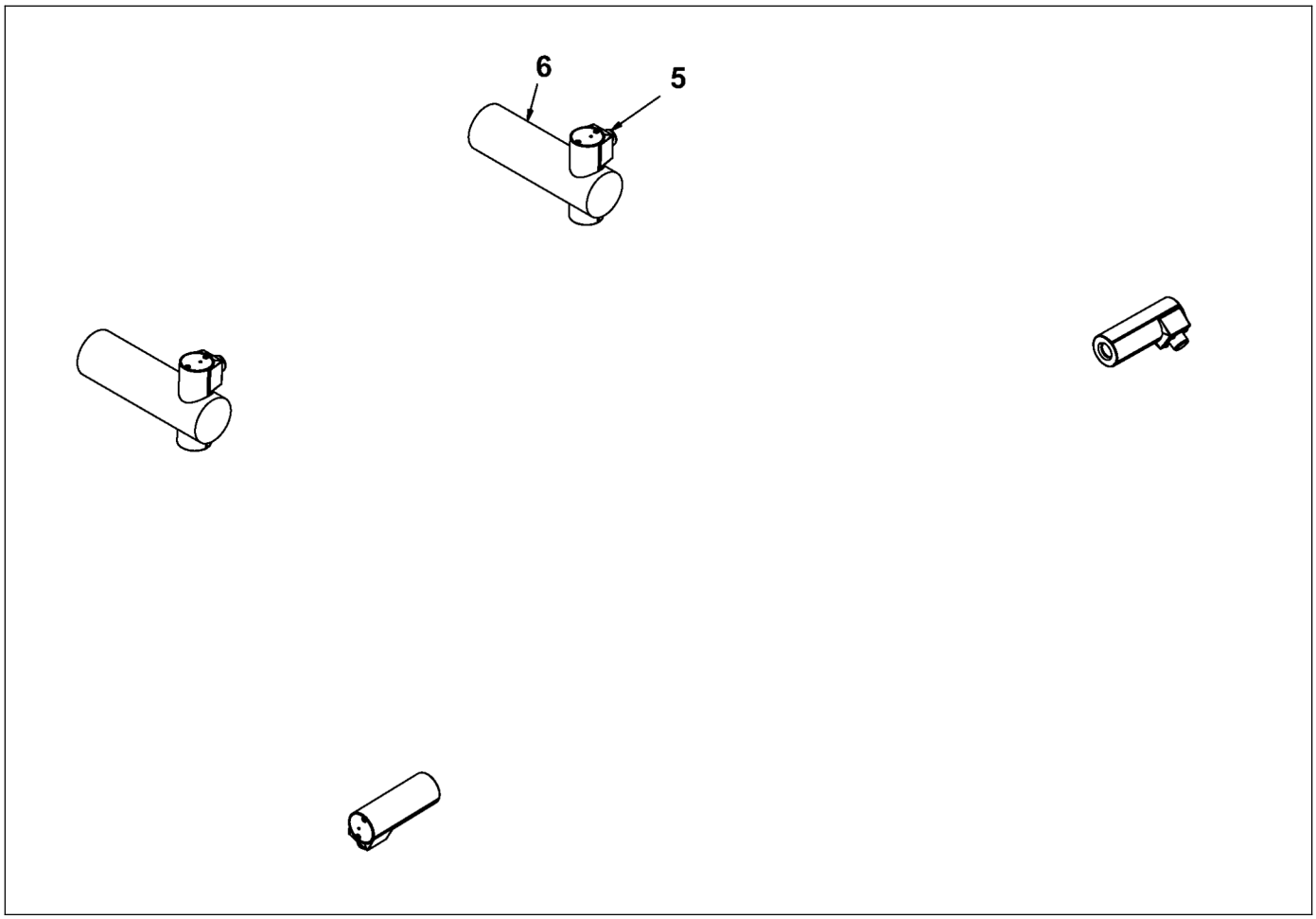

D717102000
Auger & conveyor controls, moba

Item	Part Number	Quantity	Description
1	D717102003	2	Coil cable, conveyor sensor
2	D717102004	4	Cable 15', controller-tractor
3	D717102012	2	Coil cable, auger sensor
5	D717102002	4	Sonic pwm sensor, feed system
6	D717102005	2	Bracket, sonic sensor

Please check Table of Contents for use of this assembly

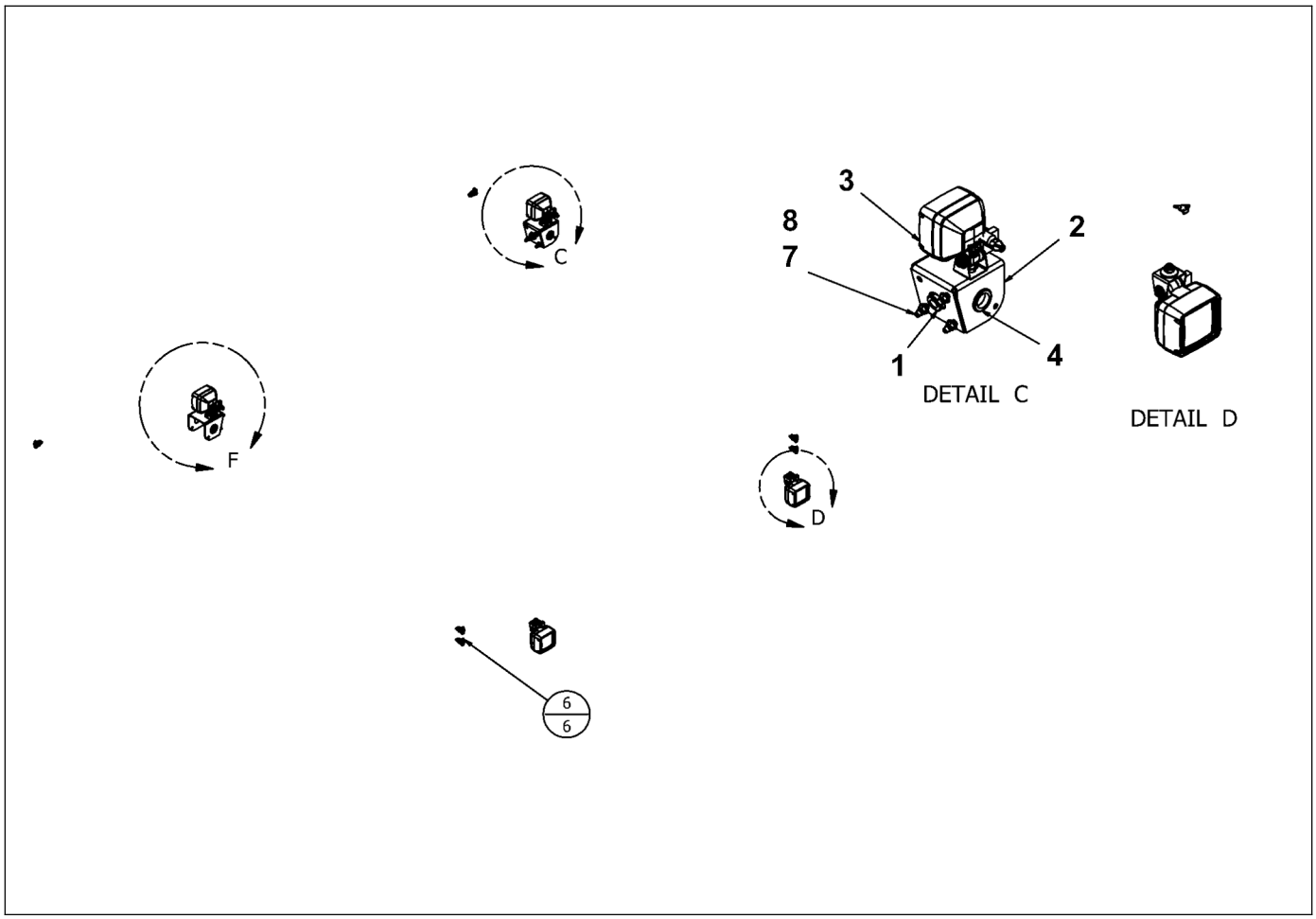

D717105500
Lighting system

Item	Part Number	Quantity	Description
1	D717105505	2	Grommet
2	D717105501	2	Bracket, front light
3	D717105503	4	Light 24V, work system
4	D717105504	2	Grommet
6	D717105507	6	Power outlet
7	D717801044	12	Narrow washer, 0.38"
8	D717800834	6	Lock nut, 3/8"

Please check Table of Contents for use of this assembly

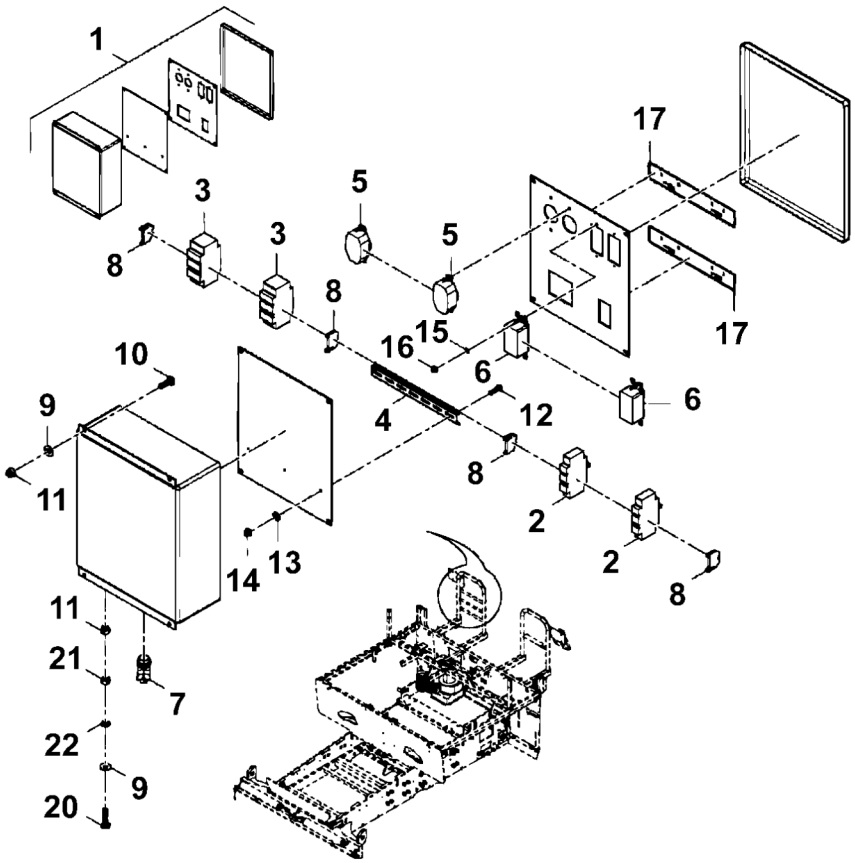

D717905000
Auxiliary power panel

Item	Part Number	Quantity	Description
1	D717905005	1	Nema box
2	D717905001	2	Circuit breaker, 1 pole
3	D717905002	2	Circuit breaker, 2 pole
4	D717905006	1	Din rail
5	D717905003	2	Receptacle
6	D717905004	2	Receptacle
7	D717905007	1	Elbow, 1/2"
8	D717104017	4	End stop, terminal block
9	D717801058	5	Narrow flat washer, 0.25"
10	D717800687	4	Screw, 1/4"
11	D717800855	5	Lock nut, 1/4"
12	D717801009	2	Hex nut, M10
13	D717801142	2	Washer, 10
14	D717800883	2	Lock nut, M10
15	D717801100	8	Washer, #6
16	D717800876	8	Lock nut, M6
17	D717905008	2	Decal, auxiliary power panel
18	D717104524	1	Wiring diagram, AC aux panel

Please check Table of Contents for use of this assembly

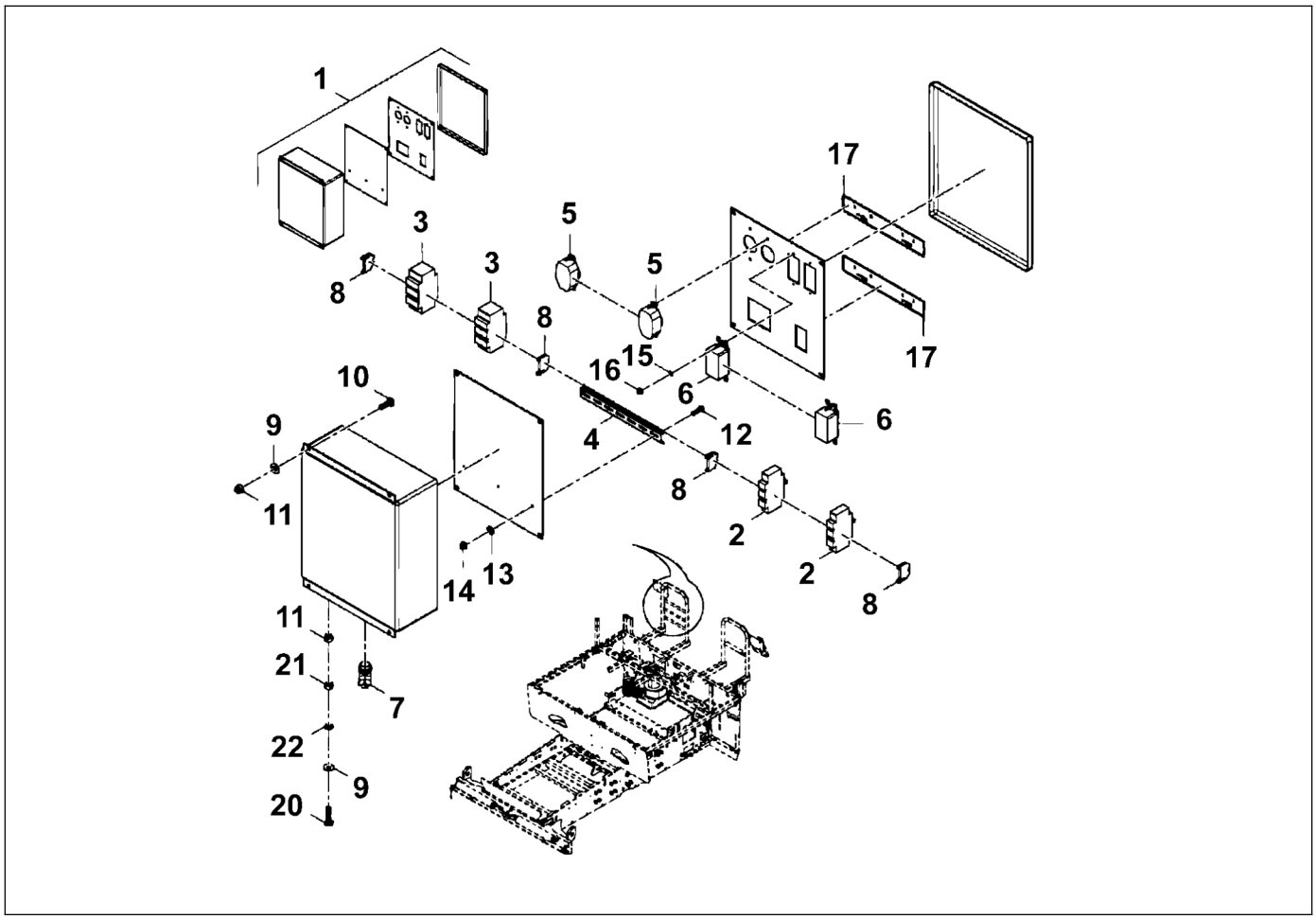

D717905000
Auxiliary power panel

Item	Part Number	Quantity	Description
19	D717104521	1	Harness, AC main panel to aux panel
20	D717800680	1	Screw, 1/4"
21	D717800785	1	Nyloc nut, 1/4"
22	D717801513	1	Washer, 1/4"
23	4812220088	1	Decal, warning

Please check Table of Contents for use of this assembly

4812222082
Key replacement kit

Item	Part Number	Quantity	Description
1	4700358881	1	Lock
2	4812222078	1	Door latch key
3	4700940451	1	Starter key

Please check Table of Contents for use of this assembly

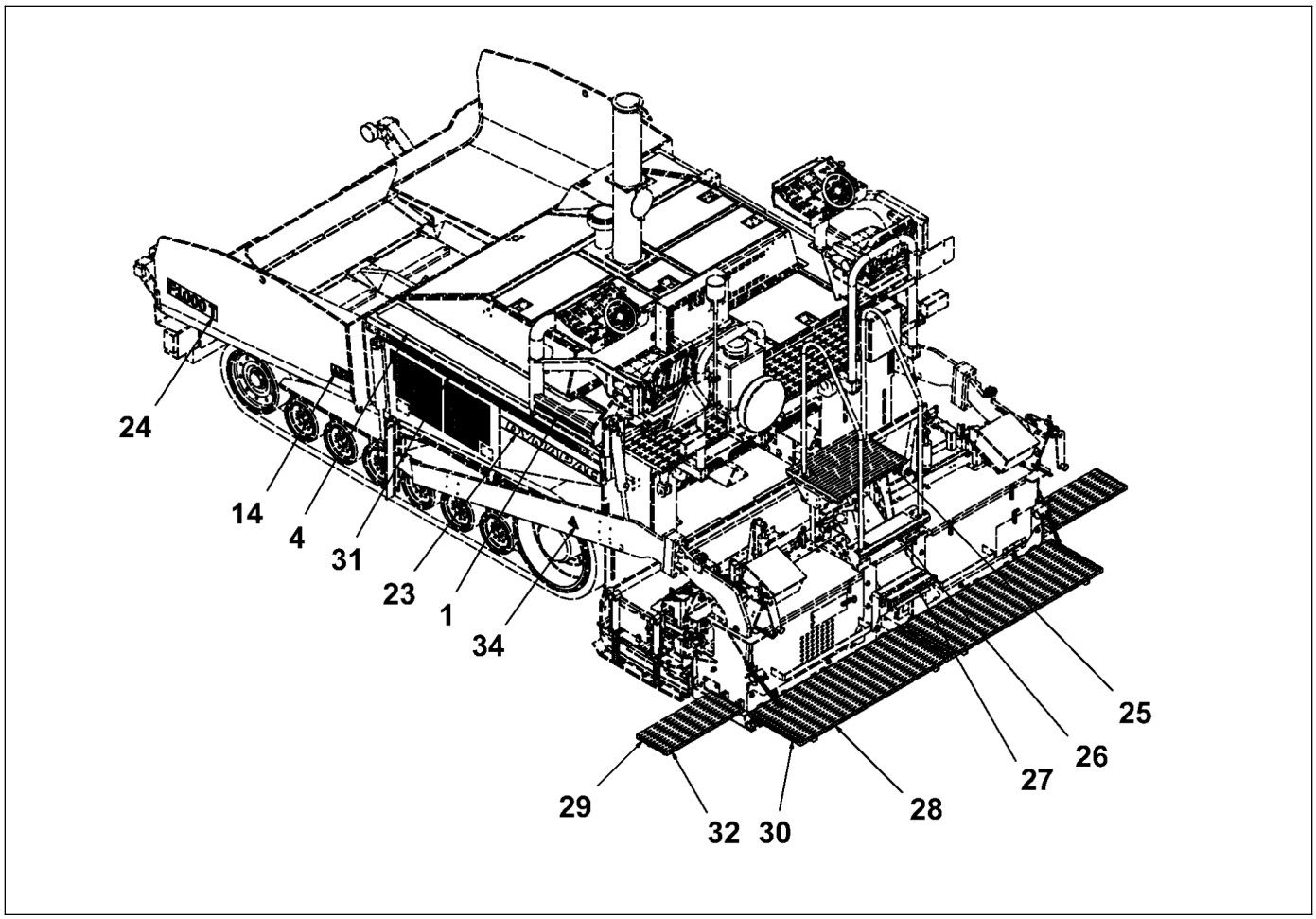

D717410000
Installation decal

Item	Part Number	Quantity	Description
1	D717410003	2	Tape, refl., op. station bot. tubes
2	D717410005	2	Tape, refl., back of walkway
3	D717410004	2	Tape, refl., hop. flsh´g bolt´g plates
4	D717410019	1	Anti slip tape
5	D717410018	1	Anti slip tape
6	D717410017	1	Anti slip tape
7	D717410016	2	Anti slip tape
8	D717410020	4	Anti slip tape
9	D717410021	1	Anti slip tape
10	D717410023	2	Scale
11	D717410027	1	Decal, right rear sensor plugs
12	D717410028	1	Decal, left rear sensor plugs
13	4700903423	1	Decal, safety
14	4700903422	2	Decal, crush area
15	4700903459	2	Decal, safety
16	4700991658	2	Decal
17	4700382751	6	Decal
18	4700357587	4	Decal, lift point

Please check Table of Contents for use of this assembly

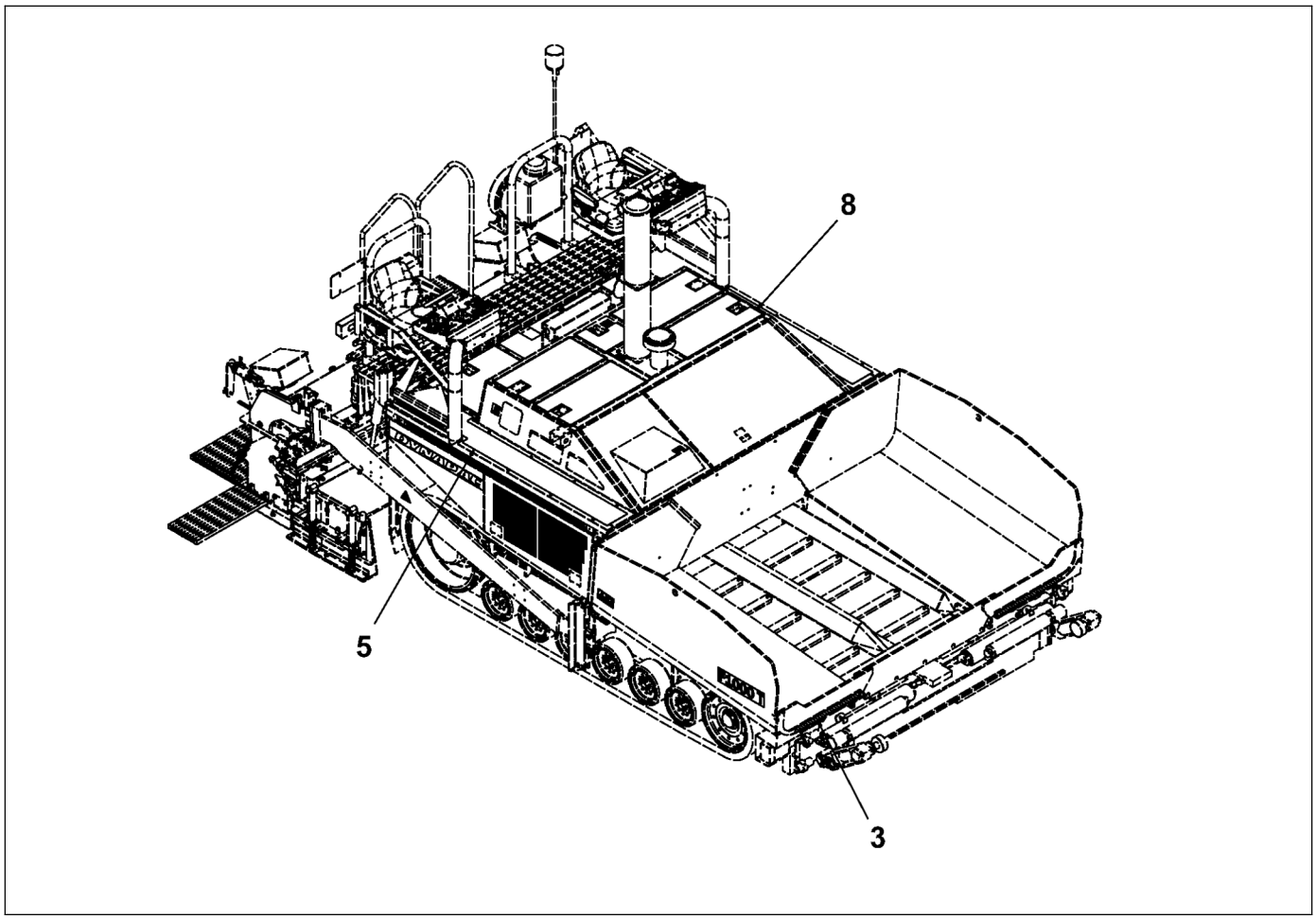

D717410000
Installation decal

Item	Part Number	Quantity	Description
19	4700903424	1	Decal, safety
20	4700904835	1	Decal
21	4700792568	1	Nameplate
22	4700281898	2	Decal
23	D956053123	2	Decal, dynapac white
24	D717410136	2	Decal, F1000T
25	4812220077	1	Reflector strip
26	4812220078	1	Reflector strip
27	4812220079	1	Reflector strip
28	4812220080	2	Reflector strip
29	4812220082	2	Reflector strip
30	4812220095	2	Reflector strip
31	D717410002	2	Tape, refl., frame channels
32	4812220081	2	Reflector strip
33	4812220092	2	Decal, seat belt
34	4812220093	2	Decal, hand crush
35	4812220097	1	Decal, high voltage
36	4812115484	1	US flex decal

Please check Table of Contents for use of this assembly

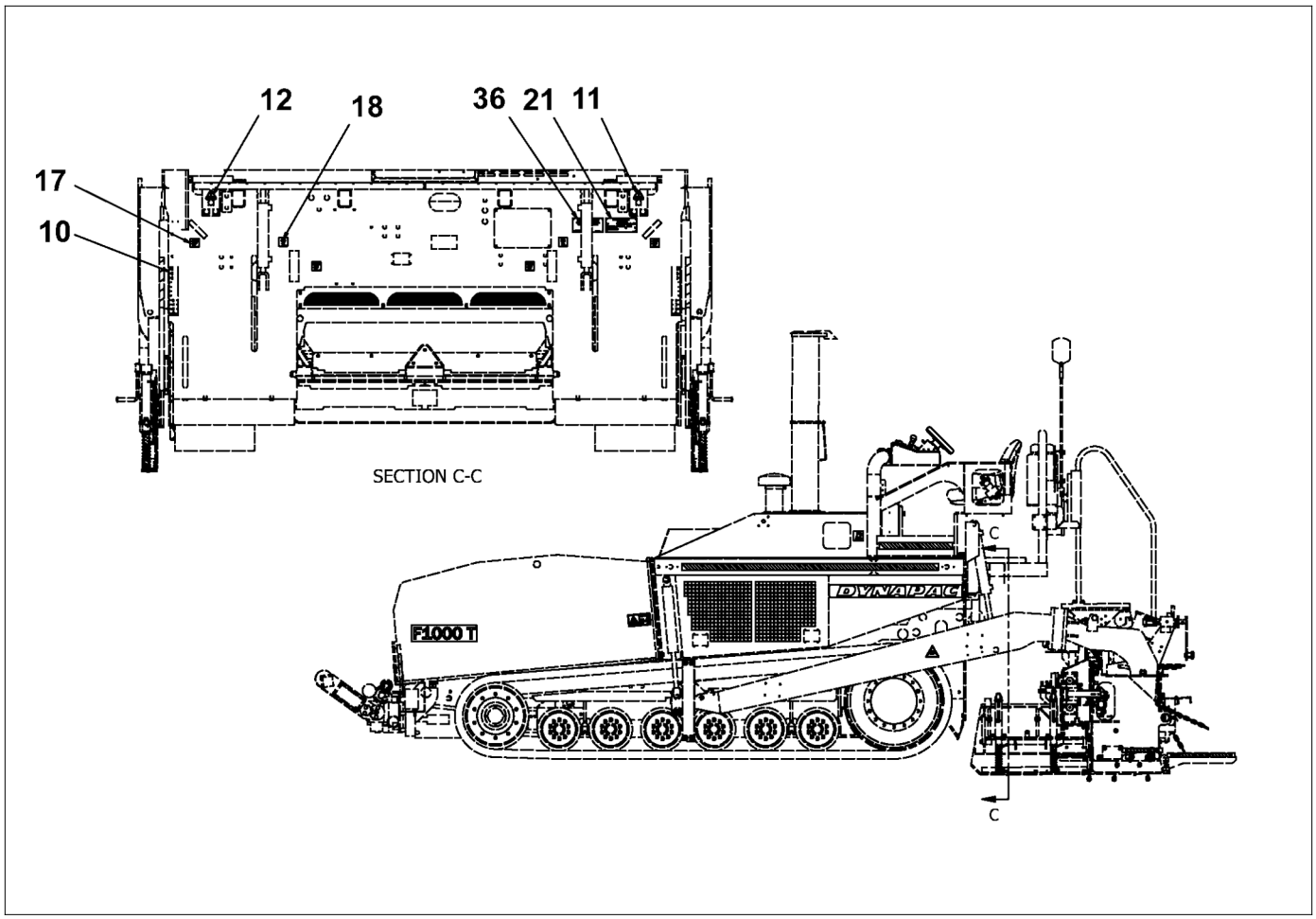

D717410000
Installation decal

Item	Part Number	Quantity	Description

DYNAPAC
Part of the Atlas Copco Group

Please see previous page for parts list.

Please check Table of Contents for use of this assembly

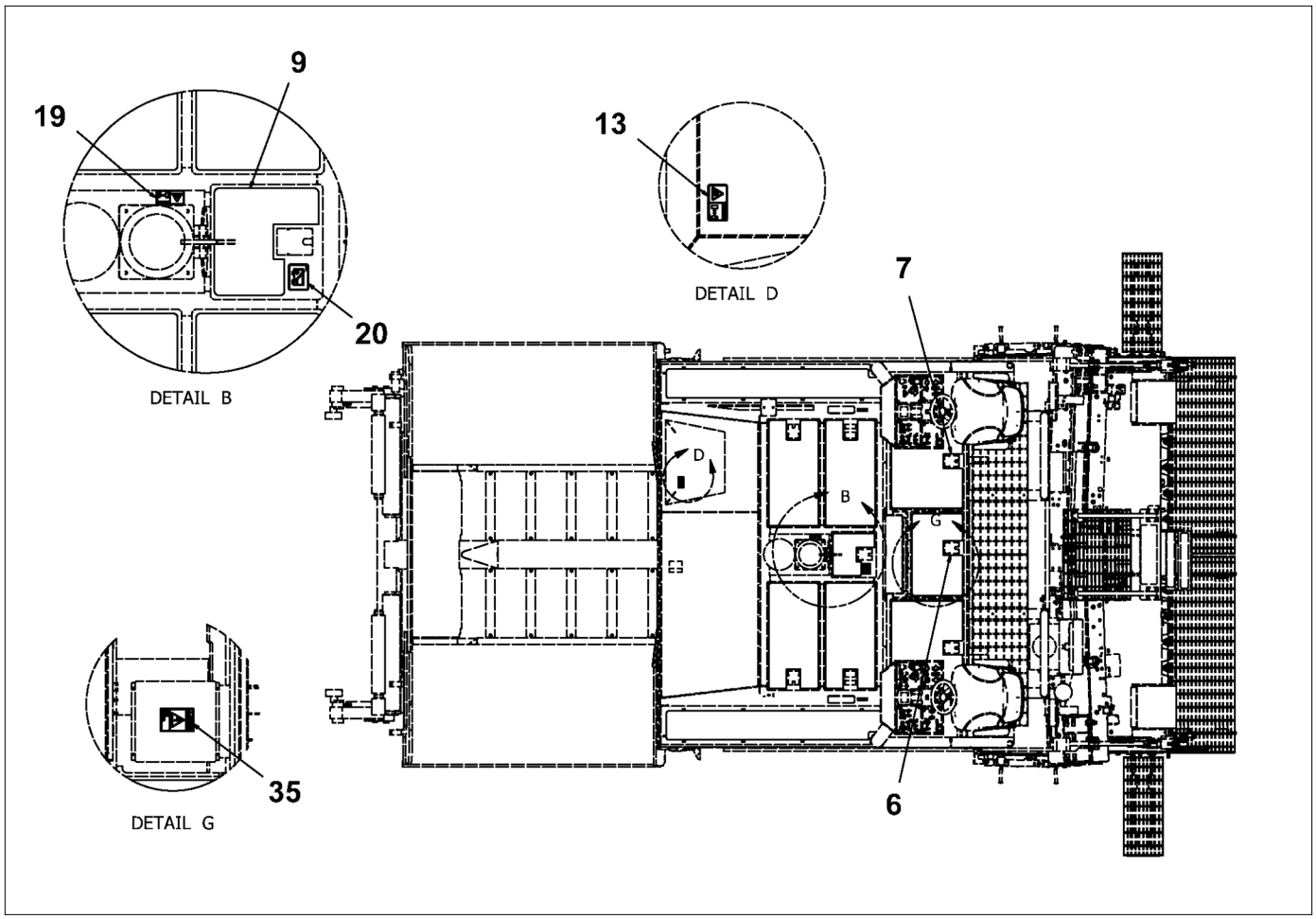

D717410000
Installation decal

Item	Part Number	Quantity	Description

DYNAPAC
Part of the Atlas Copco Group

Please see previous page for parts list.

Please check Table of Contents for use of this assembly

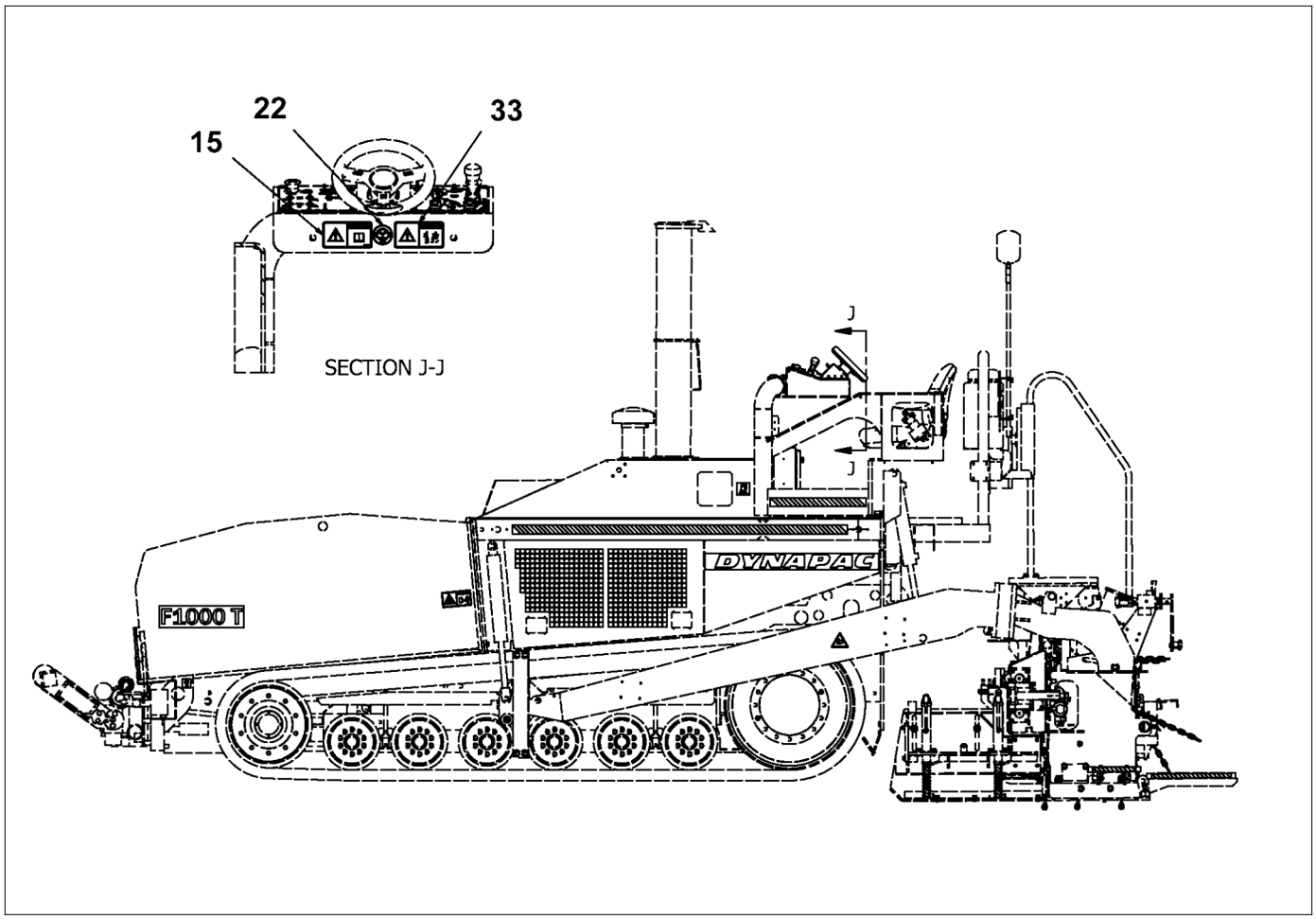

D717410000
Installation decal

Item	Part Number	Quantity	Description

DYNAPAC
Part of the Atlas Copco Group

Please see previous page for parts list.

Please check Table of Contents for use of this assembly

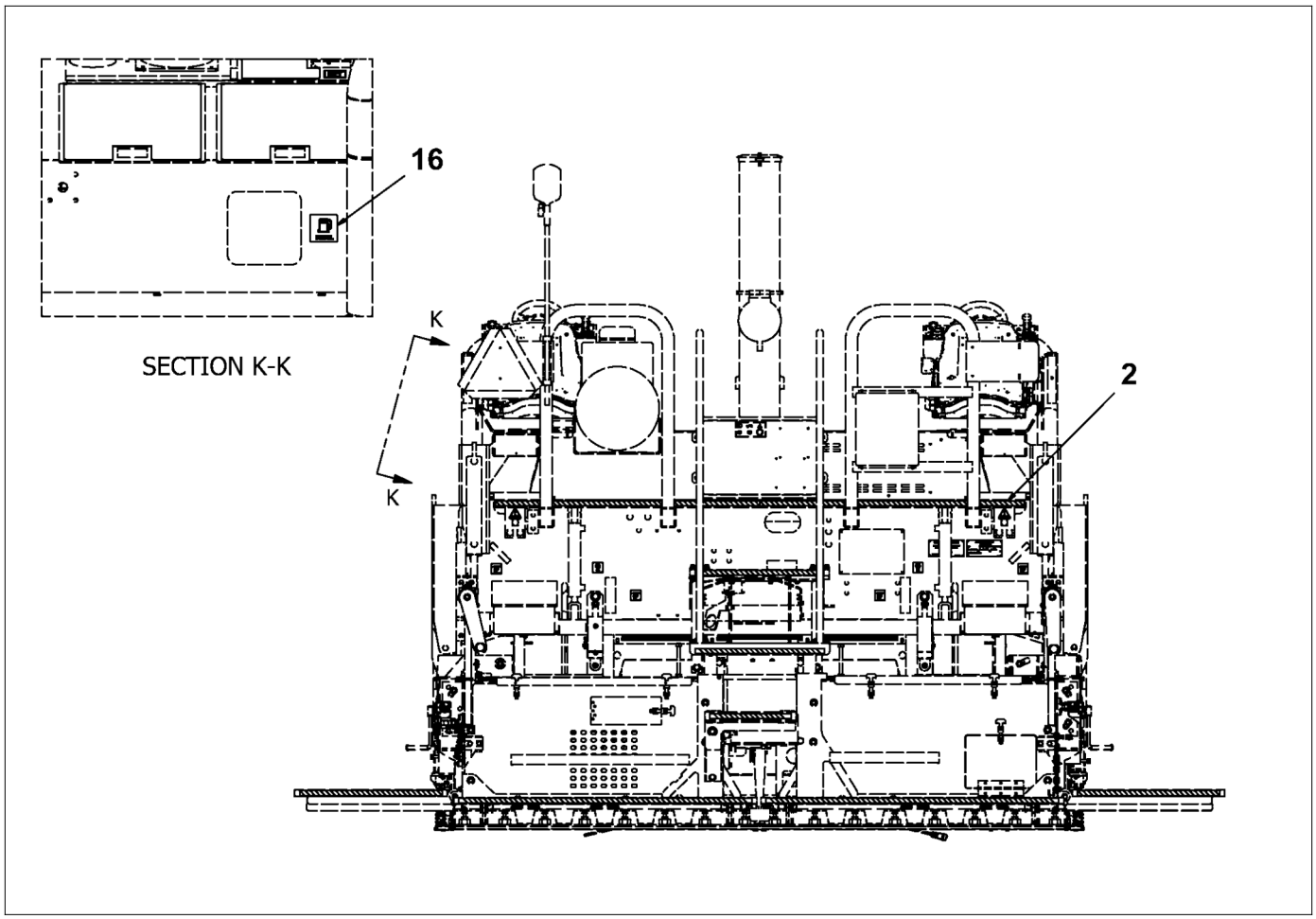

D717410000
Installation decal

Item	Part Number	Quantity	Description

DYNAPAC
Part of the Atlas Copco Group

Please see previous page for parts list.

Please check Table of Contents for use of this assembly

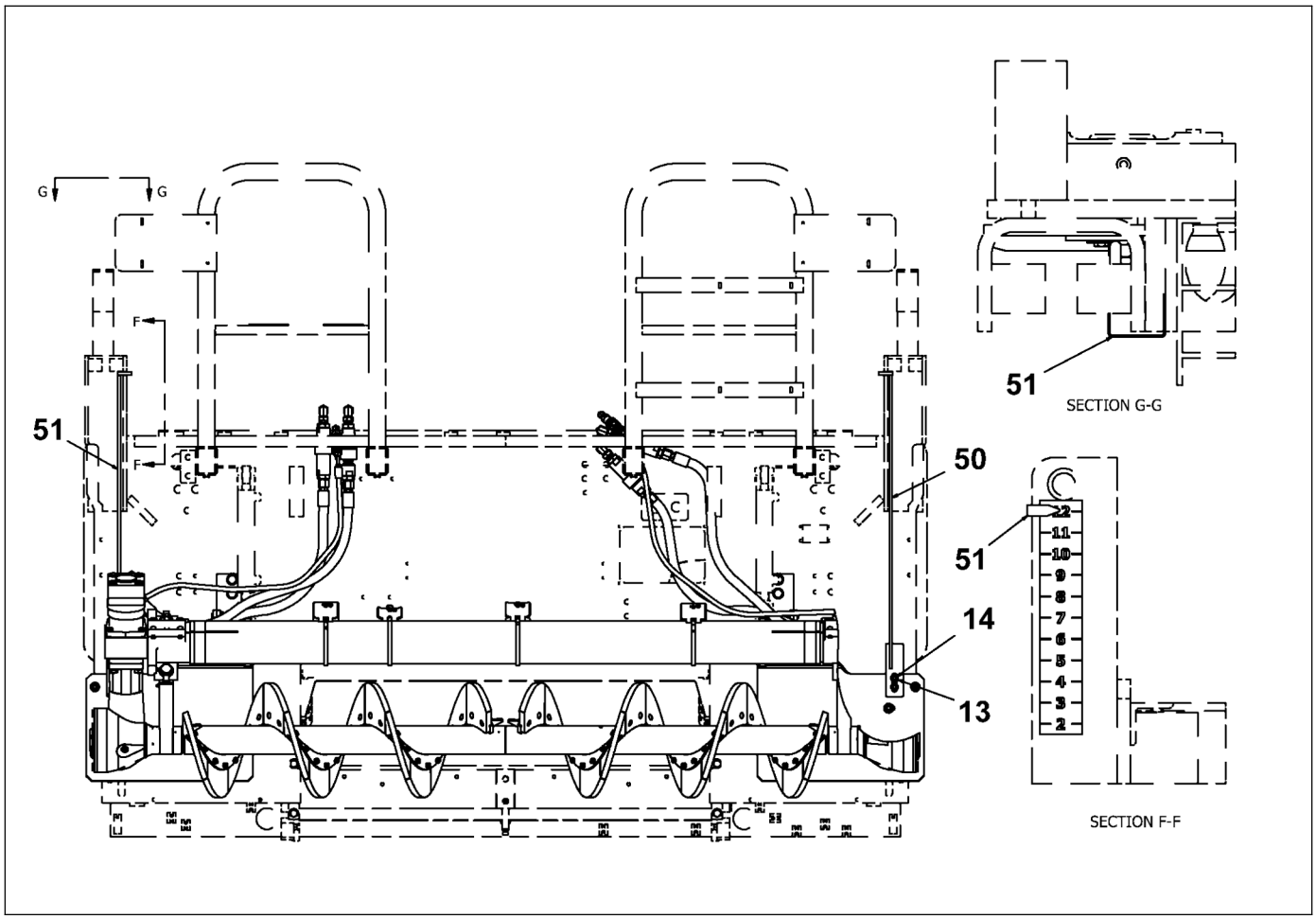

D717180001
Auger

Item	Part Number	Quantity	Description
1	D717180000	1	Auger
2	D717180003	2	Auger slide bushing
3	D717180004	6	Bushing, bolt
4	4812200195	2	Clamping bar
5	D717180006	2	Washer, 5/8"
6	D717801317	6	Nut, 3/4"
7	D717801072	12	Narrow washer, 0.75"
8	D717800631	6	Screw, 3/4"
9	D717800519	2	Screw, 5/8"
10	D717180009	1	Auger splash, right
11	D717180010	1	Auger splash, left
12	D717801079	6	Narrow washer, 0.625"
13	D717801716	4	Washer, 1/4"
14	D717801604	4	Screw, 1/4"
15	D717800526	4	Screw, 5/8"
20	D717801156	2	Nut, 5/8"
25	D717091018	4	Hose retention
34	D717802654	4	Body, 16-16

Please check Table of Contents for use of this assembly

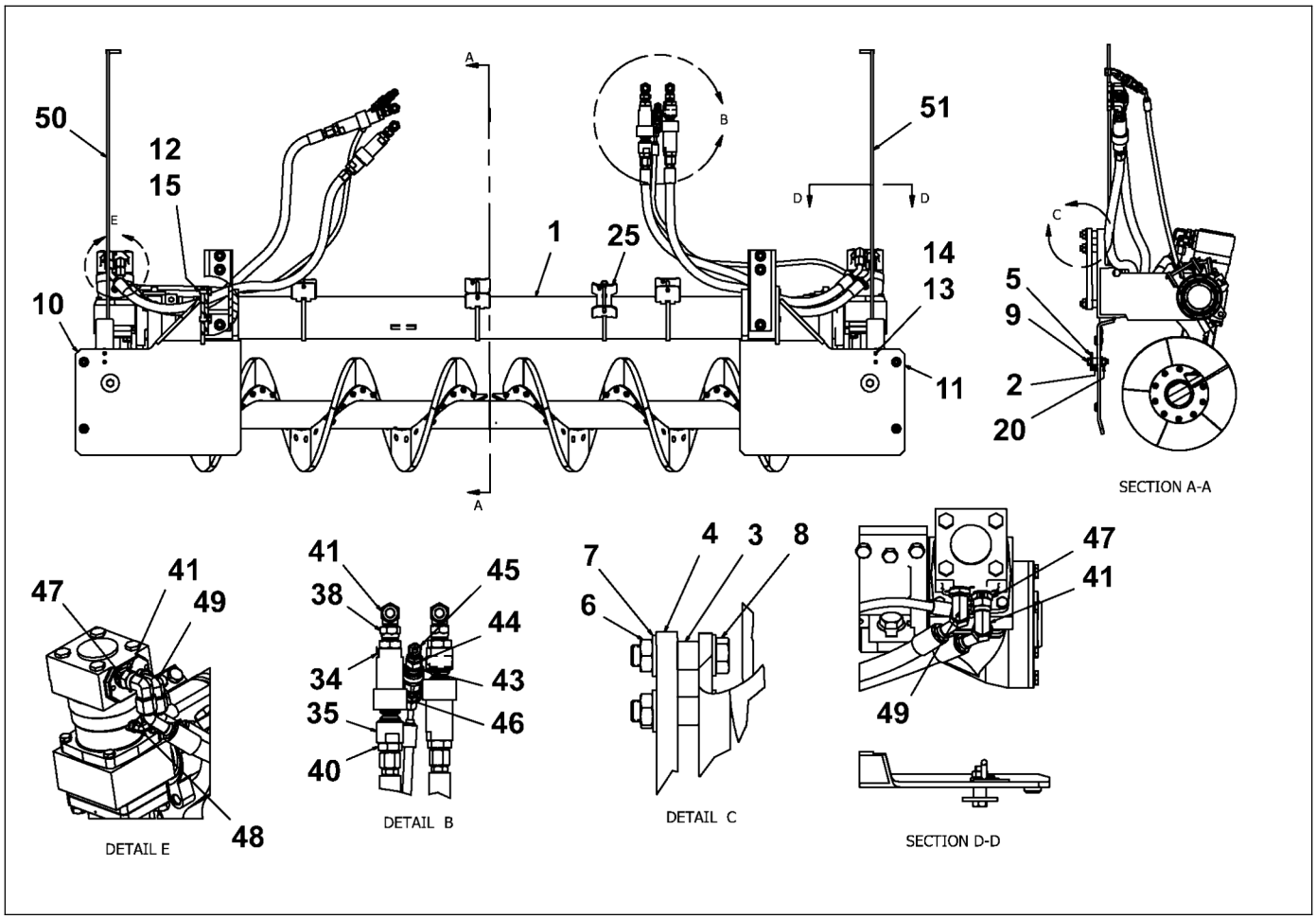

D717180001
Auger

Item	Part Number	Quantity	Description
35	D717802647	4	Nipple, 16-16
38	4812200194	4	Adapter, 16-12
40	D717802689	4	Adapter, 12-16
41	D717801912	6	Elbow, 12-12
43	D717802668	2	Coupling, female, 08-10
44	D717802675	2	Coupling, male, 08-10
45	D717802682	2	Elbow, 08-08
46	D717800323	2	Adapter, 06-06
47	D717801961	2	Adapter, 12-3/4"
48	4812200081	2	Elbow, 06-04
49	D717802031	2	Elbow, 12-12
50	4812221502	1	Height gauge, right
51	4812221505	1	Height gauge, left
52	4812200130	2	Loop flushing kit
53	4812200217	1	Auger lubrication
	D717903008	1	Auger Extensions, 11.4"
	D717903015	1	Auger Extensions, 17"
	D717903022	1	Auger extensions, 34.1"

Please check Table of Contents for use of this assembly

DYNAPAC
Part of the Atlas Copco Group

Please see previous page for drawing.

D717180001
Auger

Item	Part Number	Quantity	Description
	D717903500	1	Tunnel extensions kit
	D717951674	1	Left flight kit
	D717951681	1	Right flight kit
107	4812222659	1	Wide-width paving kit

Please check Table of Contents for use of this assembly

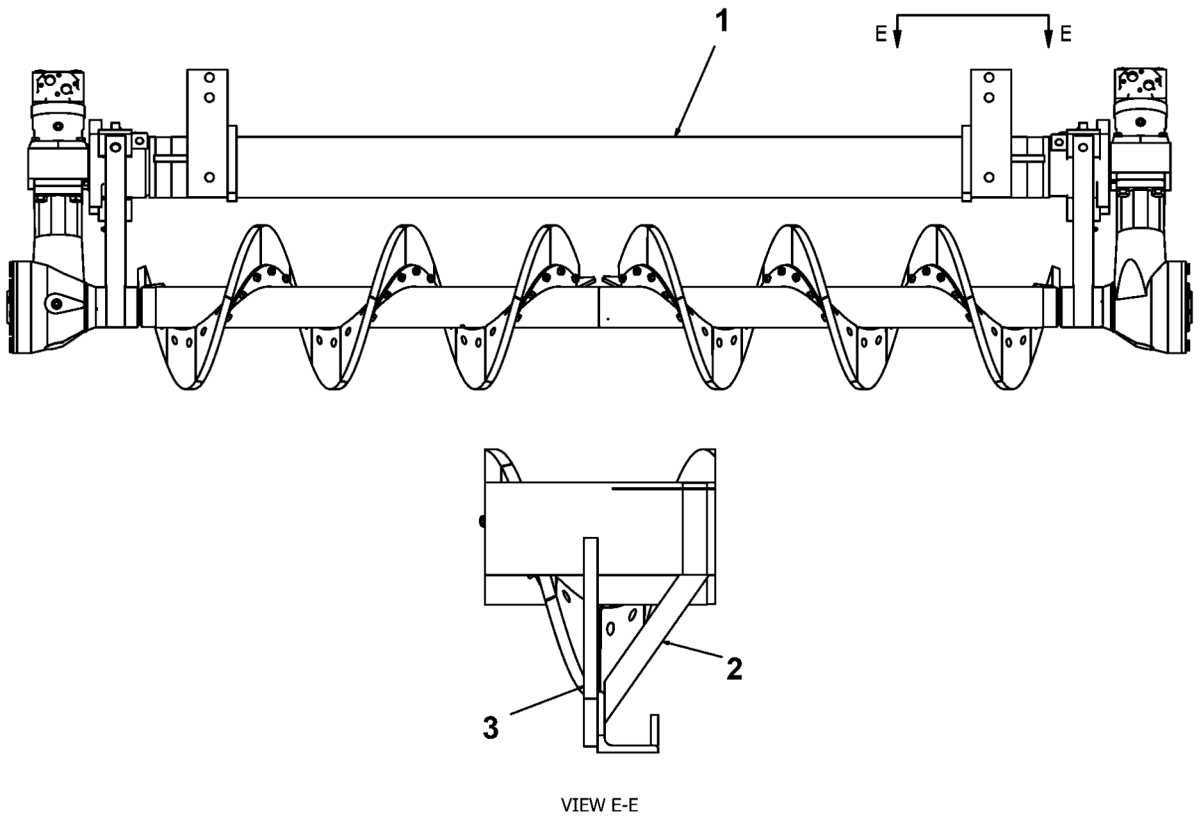

D717180000
Auger

Item	Part Number	Quantity	Description
1	D722180000	1	Auger
2	D717180002	1	Plate
3	D717180034	1	Plate, auger mount

Please check Table of Contents for use of this assembly

D722180000
Auger

Item	Part Number	Quantity	Description
1	D754111500	1	Auger grease pipelines
2	D722180900	1	Support, distributor
3	D722181600	1	Auger
4	D722182711	0	Wear part, left
5	D937634274	0	Screw, F30
6	4700928847	0	Nut
7	4749900025	0	Lock washer
8	D722182811	0	Wear part, right
9	D937634274	0	Screw, F30
10	4700928847	0	Nut
11	4749900025	0	Lock washer
12	D756183300	2	Auger gear
13	D722183400	1	Engine support
14	D936780017	4	Lock plate
15	4700600011	4	Flat washer, M16
16	4749900455	2	Screw
17	D938165873	2	Screw
18	D938151084	4	Screw

Please check Table of Contents for use of this assembly

D722180000
Auger

Item	Part Number	Quantity	Description
19	D880180062	2	Clamp
20	D880180063	2	Washer
21	4749900776	2	Screw

Please check Table of Contents for use of this assembly

D754111500
Auger grease pipelines

Item	Part Number	Quantity	Description
1	D961936205	2	Angle socket
2	D754180506	1	Lube pipe
3	D961134205	2	Screw
4	D960993190	2	Extension
5	D960969150	2	Hose
6	D935513220	2	Nipple, grease
7	D754180516	1	Lube pipe

Please check Table of Contents for use of this assembly

D722181600
Auger

Item	Part Number	Quantity	Description
1	D722181611	4	Bearing
2	D880180772	2	Support
3	D935194411	1	Bearing, needle
4	D880180768	1	Ring
5	D937976545	8	Pin, threaded
6	D935511210	3	Grease nipple
7	D935128427	4	Inner ring
8	D935183934	4	Bearing, axial needle
9	D932211701	4	O-ring
10	D935022420	1	Thrust ball bearing
11	D722181636	1	Auger, left
12	D722181643	1	Auger
13	D880180749	1	Shaft
14	D772181750	1	Bushing
15	D935194413	1	Bearing, needle
16	D880180754	1	Ring, VB500 screed
17	D932211691	2	O-ring
18	D932100729	0	Shim

Please check Table of Contents for use of this assembly

D722181600
Auger

Item	Part Number	Quantity	Description
19	D932100730	0	Shim
20	D932100732	0	Shim
21	D938690604	1	Pin
22	D937860060	4	Screw

Please check Table of Contents for use of this assembly

D756183300
Auger gear

Item	Part Number	Quantity	Description
1	D756183201	1	Outer housing
2	D756061106	1	Housing
3	D880180413	1	Cover
4	D756183315	1	Housing cover
5	D756183218	1	Hub
6	D880180419	1	Seal ring
7	D756061136	1	Drive sleeve
8	D935229706	1	Bearing
9	D935229705	1	Taper, roll bearing
10	4700116037	2	Bearing
11	D936630040	2	Ring, oil seal
12	D932211813	2	O-ring
13	D932211662	1	O-ring
14	D936032392	1	Circlip
15	D937976545	1	Pin, threaded
16	D937860264	1	Screw
17	D937860060	2	Screw
18	D930206202	1	Ring, nilos

Please check Table of Contents for use of this assembly

D756183300
Auger gear

Item	Part Number	Quantity	Description
19	4700500040	6	Cap screw, M6
20	4749900080	6	Lock washer
21	D932101171	0	Shim
22	D932101172	0	Shim
23	D932101174	0	Shim
24	D932101176	0	Shim
25	D932101327	0	Shim
26	D932101328	0	Shim
27	D932101330	0	Shim
28	D932101332	0	Shim
29	4700508019	2	Cap screw, M8
30	D951260300	1	Ring gear and pinion
31	D930435011	1	Upsetting ring
32	D938481615	1	Nut
33	D930452560	8	Screw
34	D937890151	2	Screw
35	D880180480	0	Shim
36	D880180481	0	Shim

Please check Table of Contents for use of this assembly

D756183300
Auger gear

Item	Part Number	Quantity	Description
37	D880180482	0	Shim
38	D880180483	0	Shim

Please check Table of Contents for use of this assembly

D722183400
Engine support

Item	Part Number	Quantity	Description
1	D722183403	1	Gear bearing, left
2	D722183411	1	Gear bearing, right
3	D756183419	2	Profile sleeve
4	D932211745	2	O-ring
5	D938330758	8	Screw
6	4749901061	8	Lock washer
7	4700500194	8	Cap screw, M12
8	4749900032	8	Lock washer
9	D880180421	0	Distance washer
10	D880180422	0	Distance washer
11	D880180423	0	Distance washer
12	D966057210	2	Motor, Hydr

Please check Table of Contents for use of this assembly

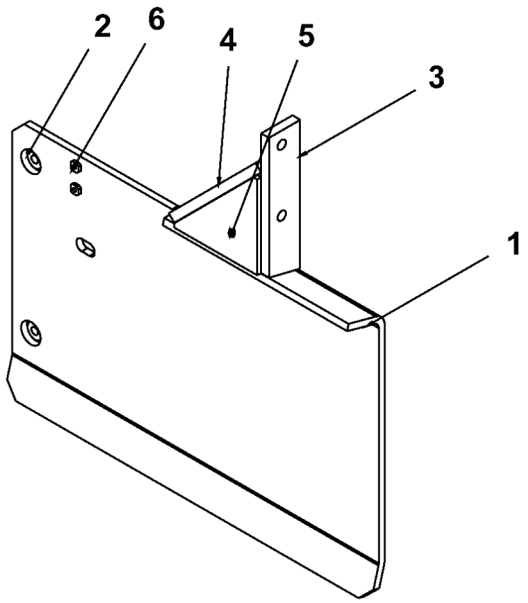

D717180010
Auger splash, left

Item	Part Number	Quantity	Description
1	D717180012	1	Auger splash plate, left
2	D717180013	2	Threaded boss
3	D717180014	1	Tapped mount plate
4	D717180015	1	Gusset plate
5	D717180029	1	Asphalt guard plate
6	D717180030	2	Nut, 1/4"

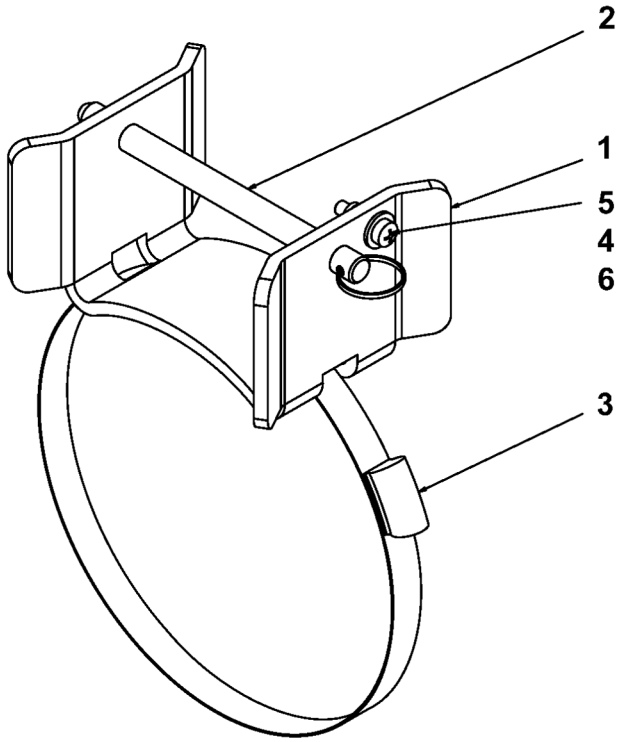

D717091018
Hose retention

Item	Part Number	Quantity	Description
1	D717091019	1	Auger hose bracket
2	D717091020	1	Quick release pin
3	D717091021	1	Clamp, hose
4	D717801142	2	Washer, 10
5	D717801240	1	Screw, M10
6	D717800897	1	Lock nut, M10
7	D717800897	1	Lock nut, M10
8	D717801142	2	Washer, 10
9	D717801240	1	Screw, M10

Please check Table of Contents for use of this assembly

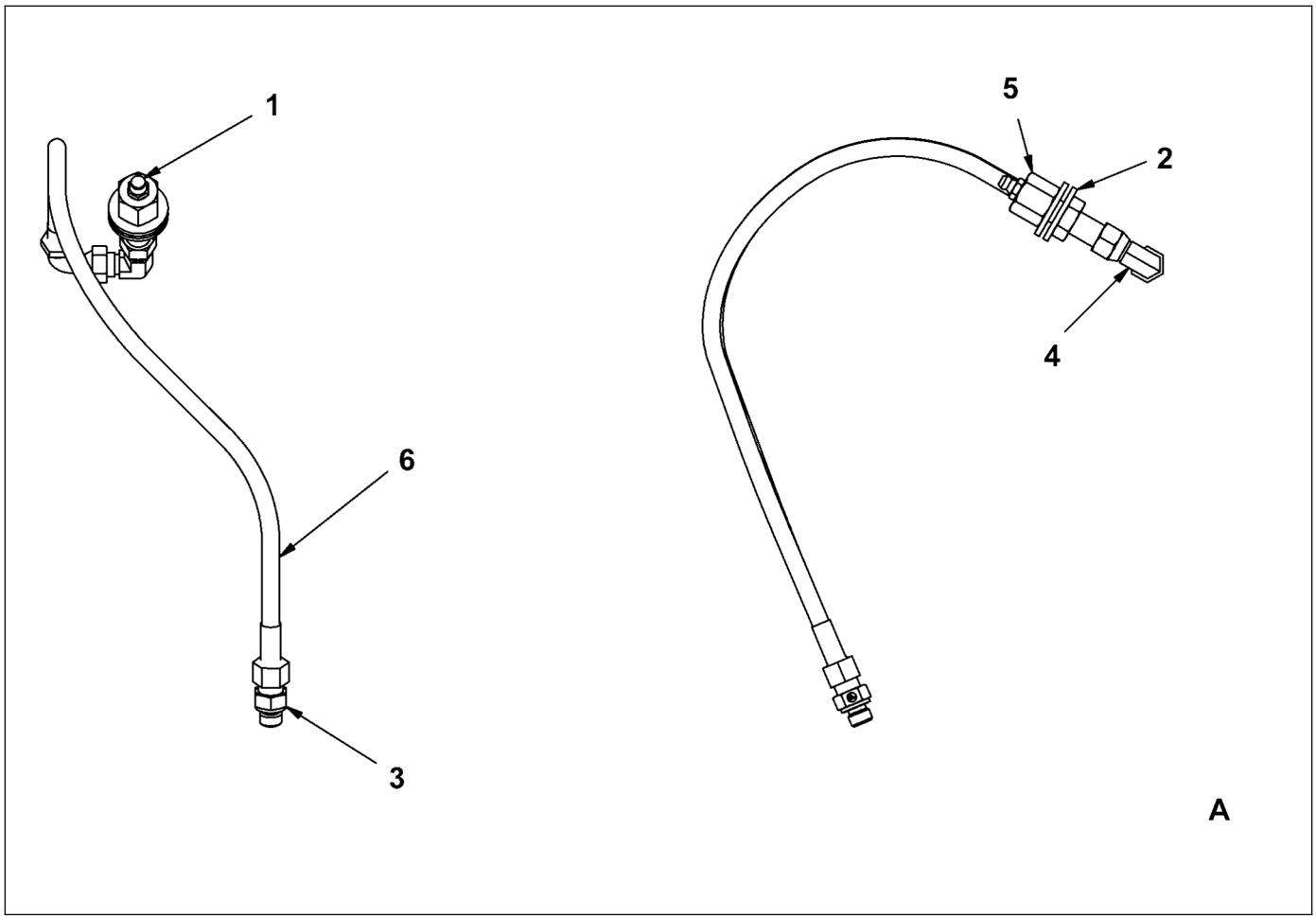

4812200217
Auger lubrication

Item	Part Number	Quantity	Description
1	D717061027	2	Zerk
2	D717801086	4	Flat washer, 0.5"
3	4812200224	2	Adapter, male-male
4	4812200226	2	Elbow
5	4812200233	2	Adapter, bulkhead
6	4812200216	2	Auger grease hose

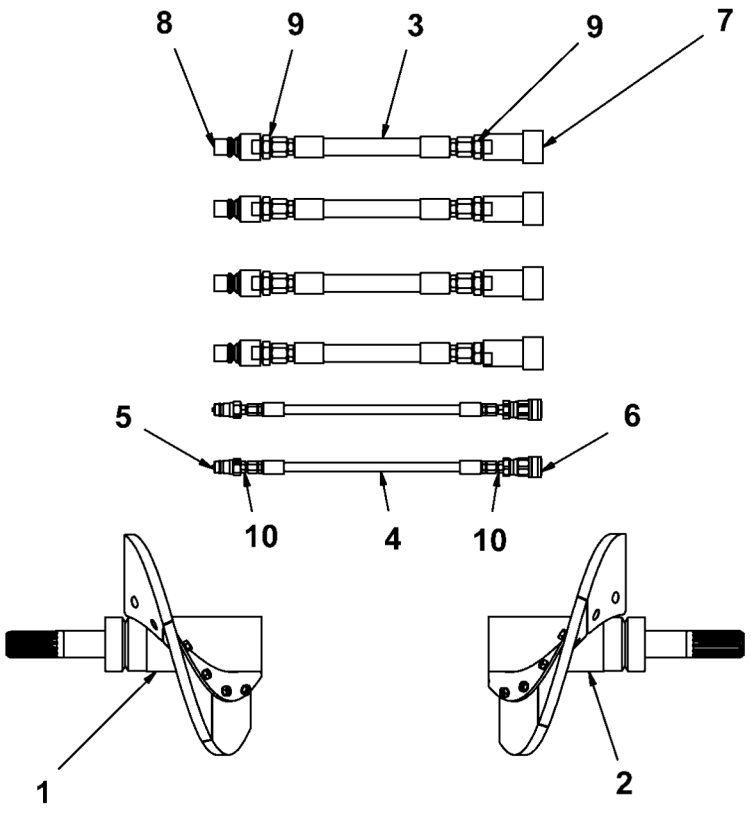

D717903008
Auger Extensions, 11.4"

Item	Part Number	Quantity	Description
1	D722181900	1	Auger, left, 290mm
2	D722182000	1	Auger, right, 290mm
3	D717903071	4	Hose, 12
4	D717903078	2	Hose, 06
5	D717802675	2	Coupling, male, 08-10
6	D717902668	2	Coupling
7	D717802654	4	Body, 16-16
8	D717802647	4	Nipple, 16-16
9	D717802689	8	Adapter, 12-16
10	D717800323	4	Adapter, 06-06
134	D717903071	1	Hose, 12

Please check Table of Contents for use of this assembly

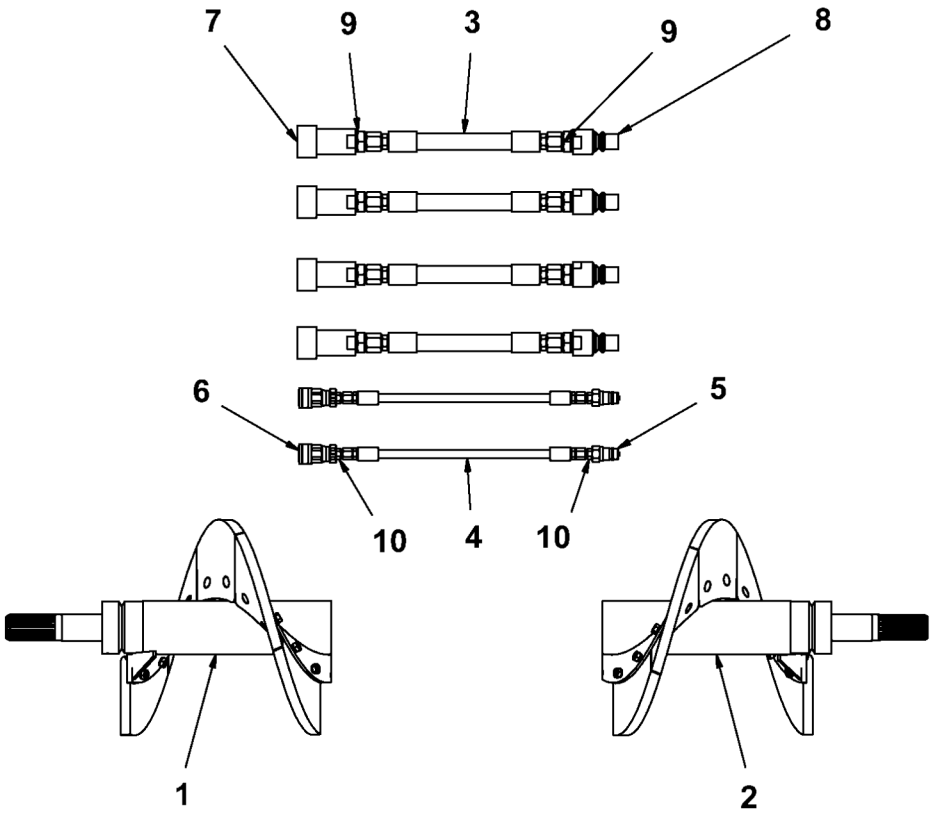

D717903015
Auger Extensions, 17"

Item	Part Number	Quantity	Description
1	D722182100	1	Auger, left, 434mm
2	D722182200	1	Auger, right, 434mm
3	D717903071	4	Hose, 12
4	D717903078	2	Hose, 06
5	D717802675	2	Coupling, male, 08-10
6	D717802668	2	Coupling, female, 08-10
7	D717802654	4	Body, 16-16
8	D717802647	4	Nipple, 16-16
9	D717802689	8	Adapter, 12-16
10	D717800323	4	Adapter, 06-06

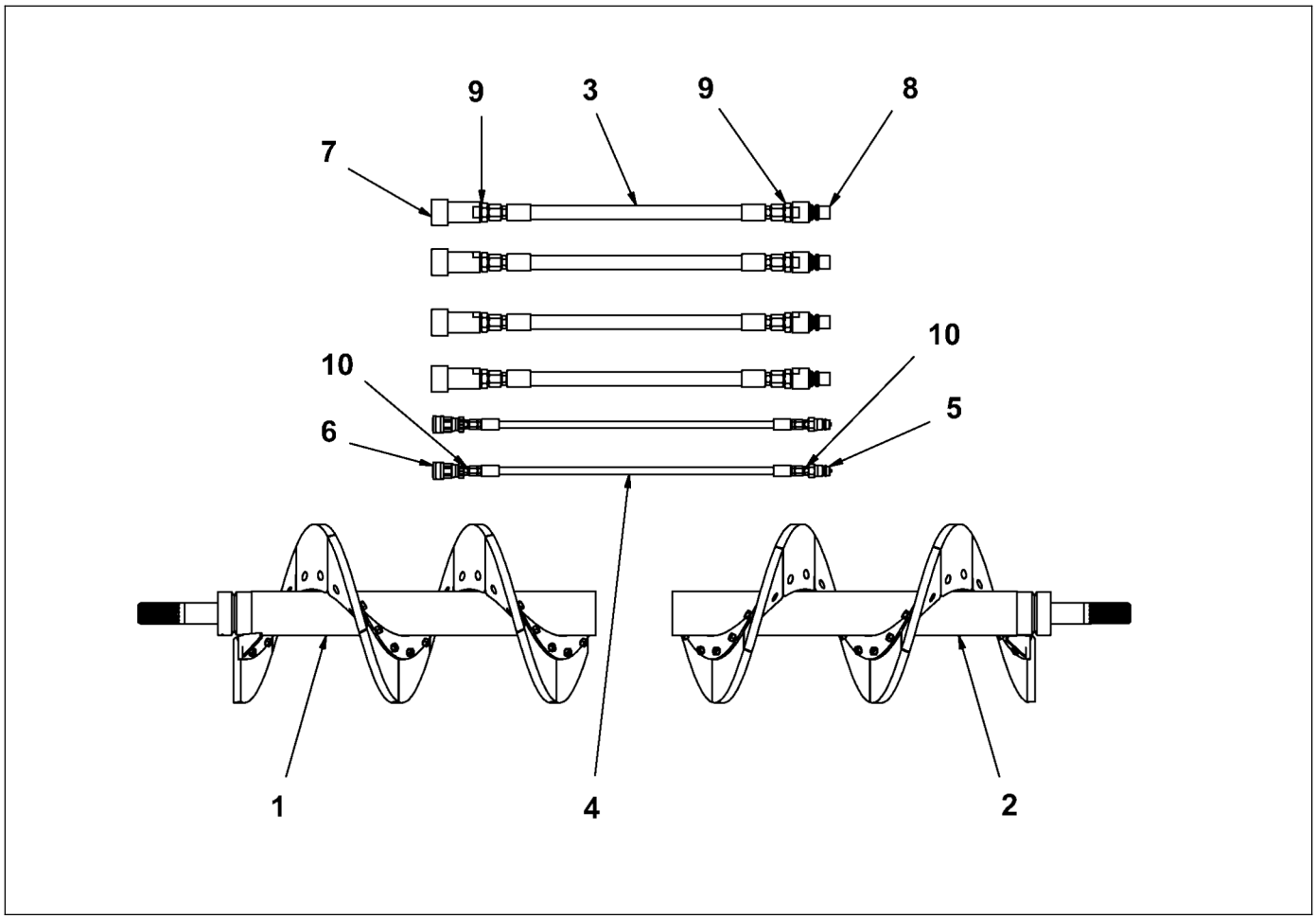

D717903022
Auger extensions, 34.1"

Item	Part Number	Quantity	Description
1	D722182300	1	Auger, left, 868mm
2	D722182400	1	Auger, right, 868mm
3	D717903085	4	Hose extension, 12
4	D717903092	2	Hose, 06
5	D717802675	2	Coupling, male, 08-10
6	D717802668	2	Coupling, female, 08-10
7	D717802654	4	Body, 16-16
8	D717802647	4	Nipple, 16-16
9	D717802689	8	Adapter, 12-16
10	D717800323	4	Adapter, 06-06

Please check Table of Contents for use of this assembly

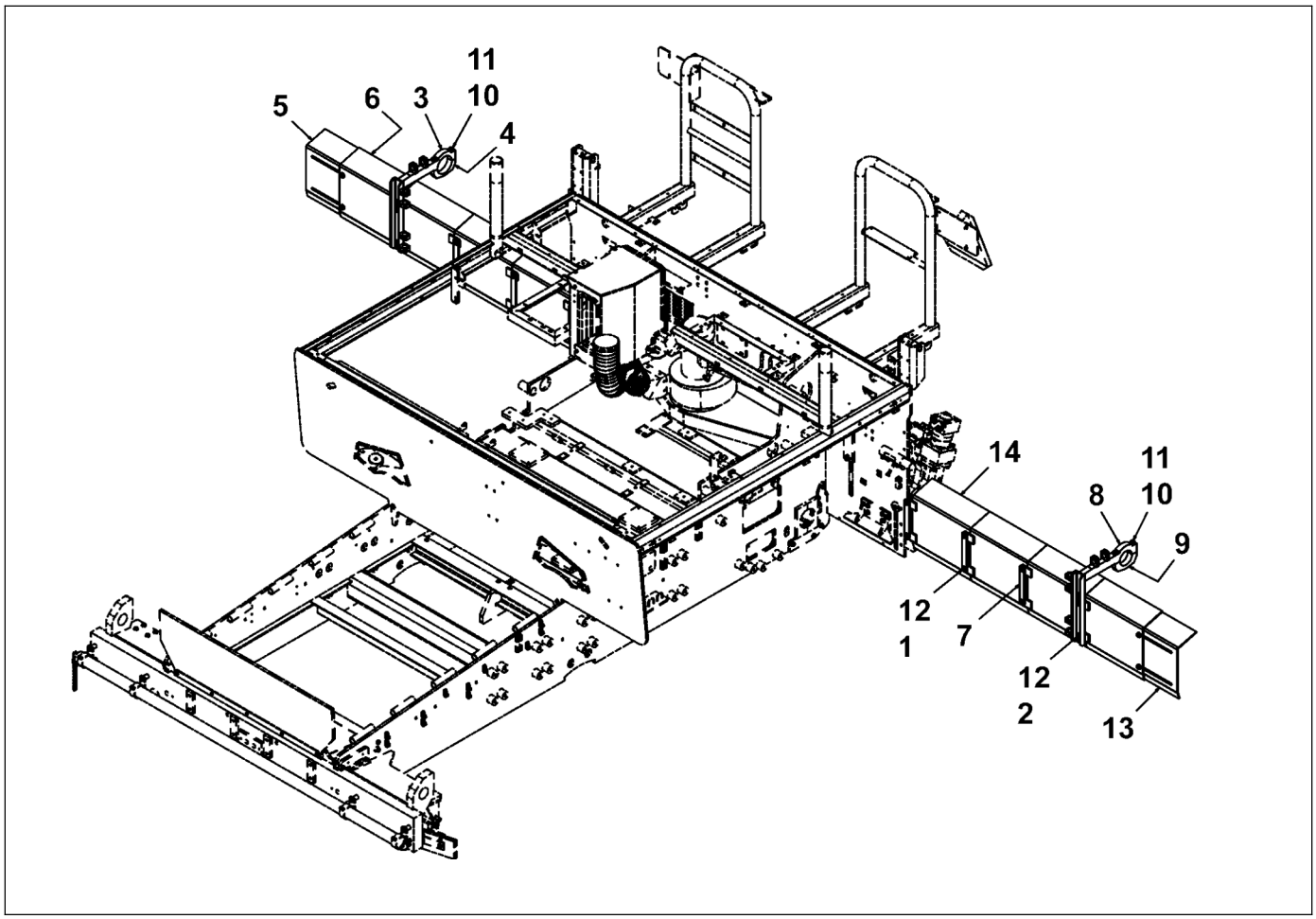

D717903500
Tunnel extensions kit

Item	Part Number	Quantity	Description
1	D717800743	16	Screw, 1/2"
2	D717800736	4	Screw, 1/2"
3	4812222676	1	Extension support, right
4	D717903511	1	Clamp, right extension
5	D717903506	1	Extension, right
6	D717903501	4	Splash extension, right
7	D717903515	8	Clamp
8	4812222674	1	Extension support, left
9	D717903514	1	Clamp, left extension
10	D717801079	4	Narrow washer, 0.625"
11	D717802437	4	Screw, 5/8"
12	D717801086	20	Flat washer, 0.5"
13	D717903507	1	Extension, left
14	D717903502	4	Splash extension, left

Please check Table of Contents for use of this assembly

D717951674
Left flight kit

Item	Part Number	Quantity	Description
1	D722182711	1	Wear part, left
2	D937634274	2	Screw, F30
3	4700928847	2	Nut
4	4749900025	4	Lock washer

Please check Table of Contents for use of this assembly

D717951681
Right flight kit

Item	Part Number	Quantity	Description
1	D722182811	1	Wear part, right
2	D937634274	2	Screw, F30
3	4700928847	2	Nut
4	4749900025	4	Lock washer

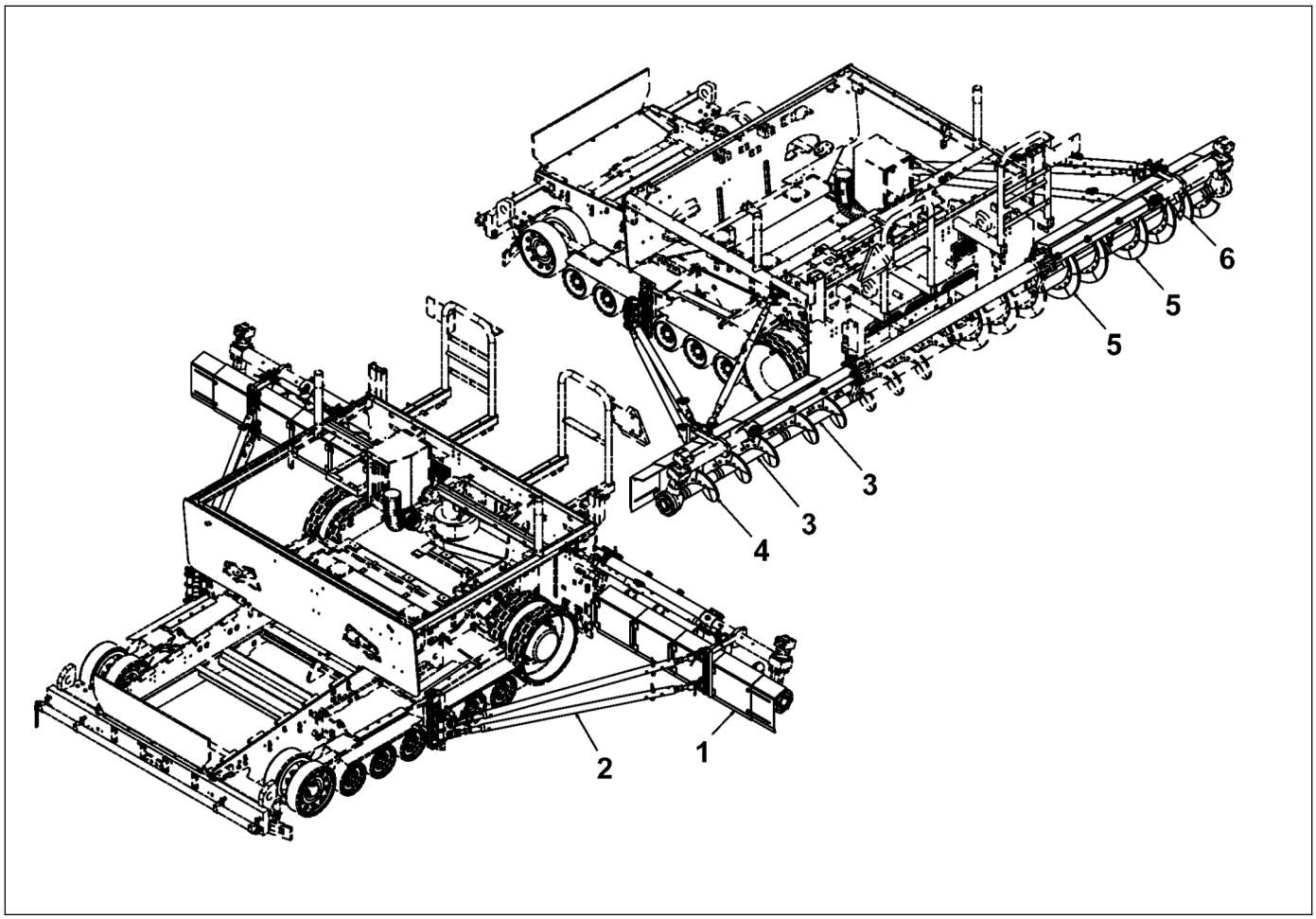

4812222659
Wide-width paving kit

Item	Part Number	Quantity	Description
1	D717903500	1	Tunnel extensions kit
2	4812222662	1	Mounting components kit
3	D722182300	2	Auger, left, 868mm
4	D722182100	1	Auger, left, 434mm
5	D722182400	2	Auger, right, 868mm
6	D722182200	1	Auger, right, 434mm

Please check Table of Contents for use of this assembly

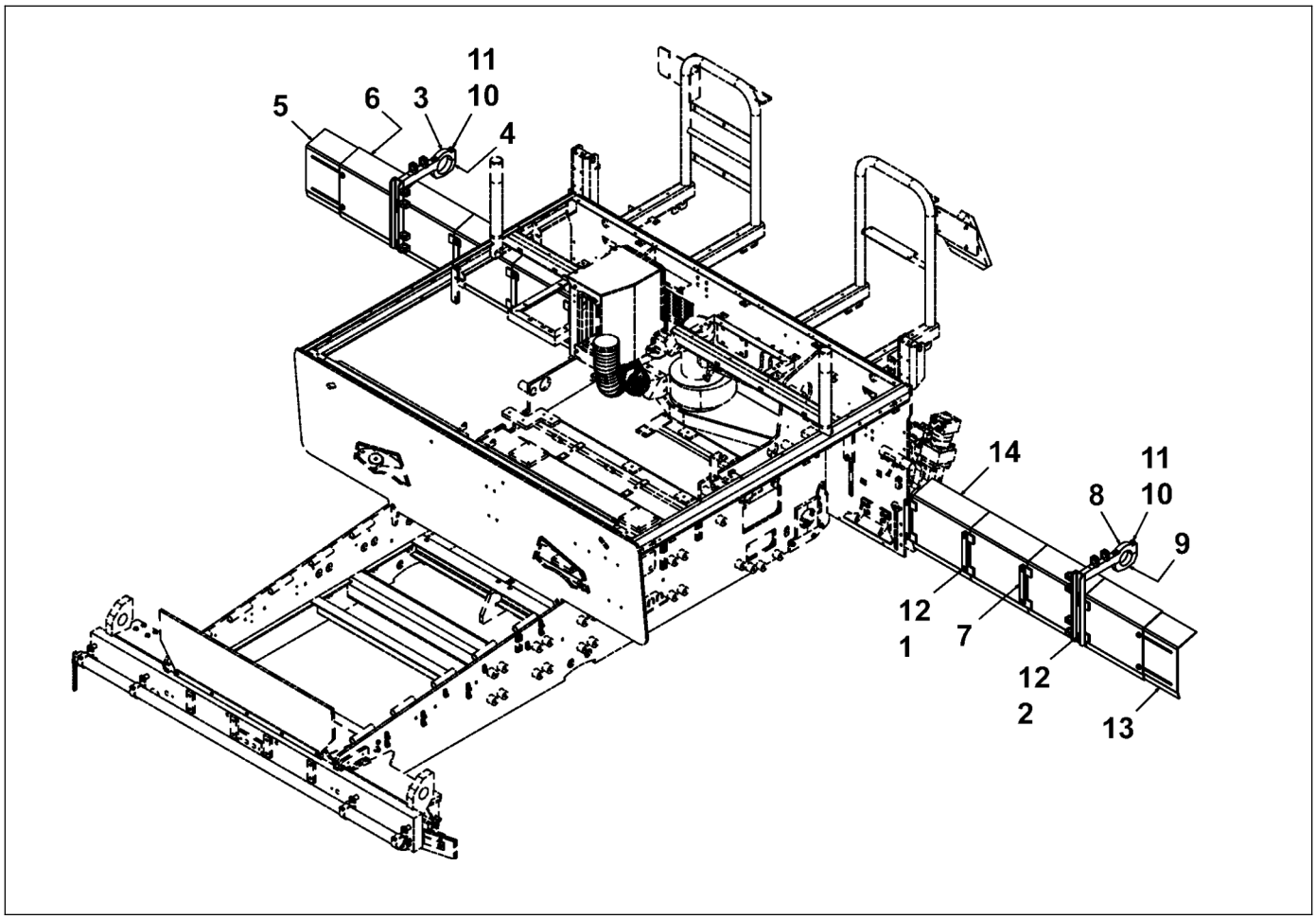

D717903500
Tunnel extensions kit

Item	Part Number	Quantity	Description
1	D717800743	16	Screw, 1/2"
2	D717800736	4	Screw, 1/2"
3	4812222676	1	Extension support, right
4	D717903511	1	Clamp, right extension
5	D717903506	1	Extension, right
6	D717903501	4	Splash extension, right
7	D717903515	8	Clamp
8	4812222674	1	Extension support, left
9	D717903514	1	Clamp, left extension
10	D717801079	4	Narrow washer, 0.625"
11	D717802437	4	Screw, 5/8"
12	D717801086	20	Flat washer, 0.5"
13	D717903507	1	Extension, left
14	D717903502	4	Splash extension, left

Please check Table of Contents for use of this assembly

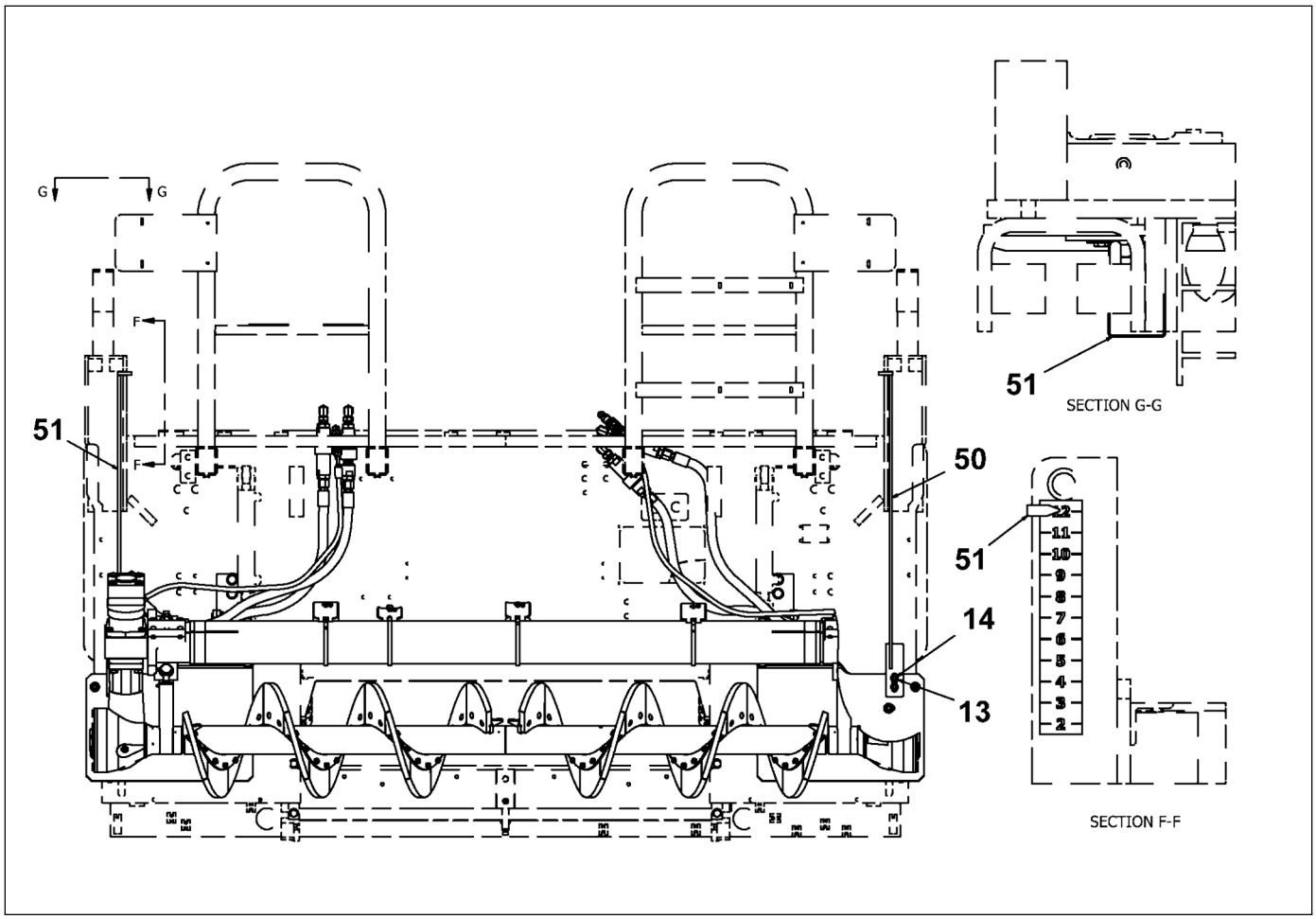

D717180001
Auger

Item	Part Number	Quantity	Description
1	D717180000	1	Auger
2	D717180003	2	Auger slide bushing
3	D717180004	6	Bushing, bolt
4	4812200195	2	Clamping bar
5	D717180006	2	Washer, 5/8"
6	D717801317	6	Nut, 3/4"
7	D717801072	12	Narrow washer, 0.75"
8	D717800631	6	Screw, 3/4"
9	D717800519	2	Screw, 5/8"
10	D717180009	1	Auger splash, right
11	D717180010	1	Auger splash, left
12	D717801079	6	Narrow washer, 0.625"
13	D717801716	4	Washer, 1/4"
14	D717801604	4	Screw, 1/4"
15	D717800526	4	Screw, 5/8"
20	D717801156	2	Nut, 5/8"
25	D717091018	4	Hose retention
34	D717802654	4	Body, 16-16

Please check Table of Contents for use of this assembly

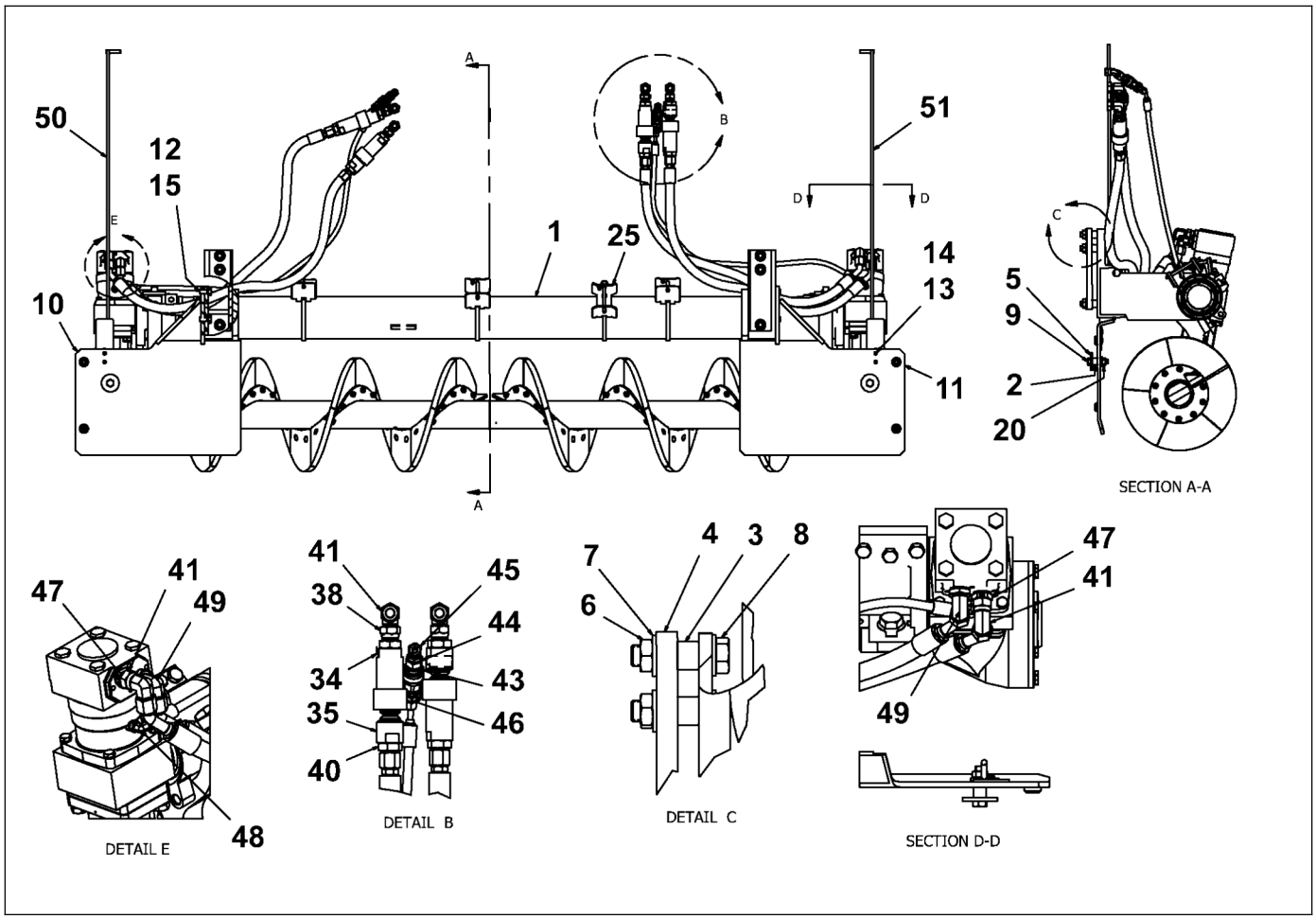

D717180001
Auger

Item	Part Number	Quantity	Description
35	D717802647	4	Nipple, 16-16
38	4812200194	4	Adapter, 16-12
40	D717802689	4	Adapter, 12-16
41	D717801912	6	Elbow, 12-12
43	D717802668	2	Coupling, female, 08-10
44	D717802675	2	Coupling, male, 08-10
45	D717802682	2	Elbow, 08-08
46	D717800323	2	Adapter, 06-06
47	D717801961	2	Adapter, 12-3/4"
48	4812200081	2	Elbow, 06-04
49	D717802031	2	Elbow, 12-12
50	4812221502	1	Height gauge, right
51	4812221505	1	Height gauge, left
52	4812200130	2	Loop flushing kit
53	4812200217	1	Auger lubrication
	D717903008	1	Auger Extensions, 11.4"
	D717903015	1	Auger Extensions, 17"
	D717903022	1	Auger extensions, 34.1"

Please check Table of Contents for use of this assembly

DYNAPAC
Part of the Atlas Copco Group

Please see previous page for drawing.

D717180001
Auger

Item	Part Number	Quantity	Description
	D717903500	1	Tunnel extensions kit
	D717951674	1	Left flight kit
	D717951681	1	Right flight kit
107	4812222659	1	Wide-width paving kit

Please check Table of Contents for use of this assembly

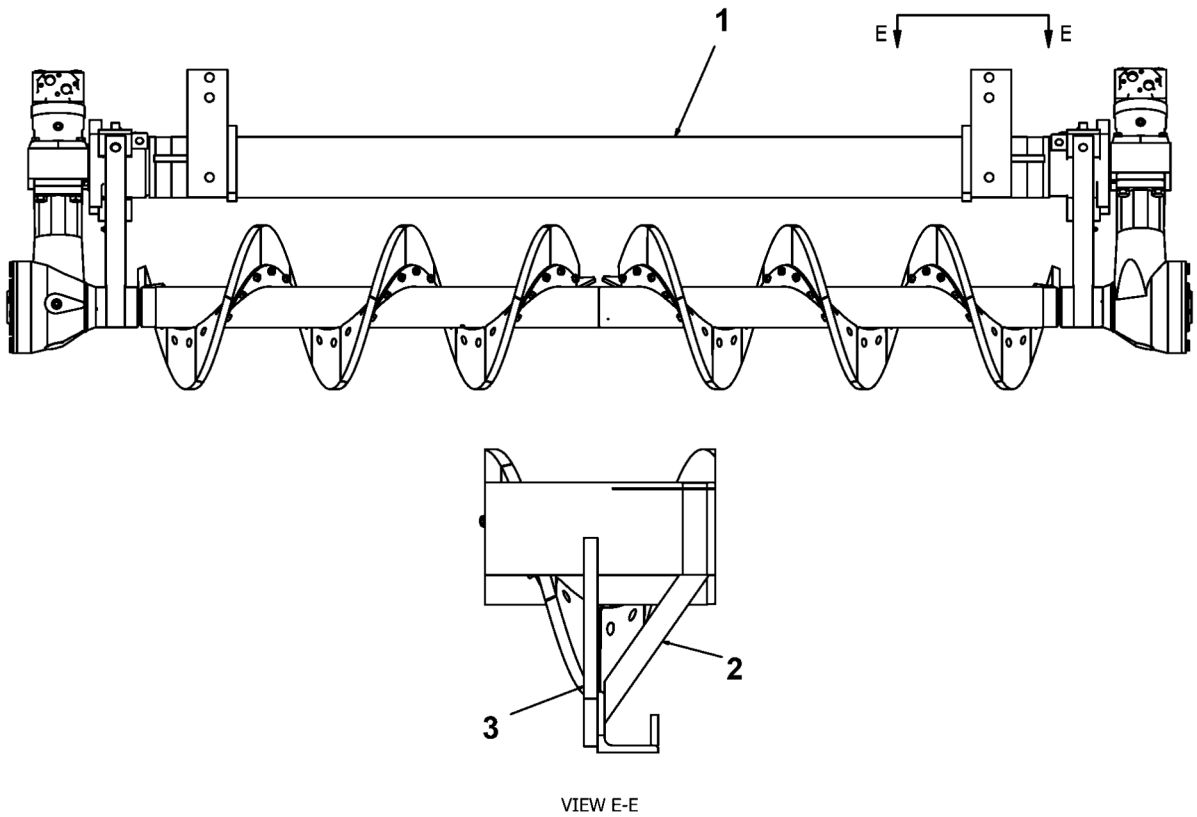

D717180000
Auger

Item	Part Number	Quantity	Description
1	D722180000	1	Auger
2	D717180002	1	Plate
3	D717180034	1	Plate, auger mount

Please check Table of Contents for use of this assembly

D722180000
Auger

Item	Part Number	Quantity	Description
1	D754111500	1	Auger grease pipelines
2	D722180900	1	Support, distributor
3	D722181600	1	Auger
4	D722182711	0	Wear part, left
5	D937634274	0	Screw, F30
6	4700928847	0	Nut
7	4749900025	0	Lock washer
8	D722182811	0	Wear part, right
9	D937634274	0	Screw, F30
10	4700928847	0	Nut
11	4749900025	0	Lock washer
12	D756183300	2	Auger gear
13	D722183400	1	Engine support
14	D936780017	4	Lock plate
15	4700600011	4	Flat washer, M16
16	4749900455	2	Screw
17	D938165873	2	Screw
18	D938151084	4	Screw

Please check Table of Contents for use of this assembly

D722180000
Auger

Item	Part Number	Quantity	Description
19	D880180062	2	Clamp
20	D880180063	2	Washer
21	4749900776	2	Screw

Please check Table of Contents for use of this assembly

D754111500
Auger grease pipelines

Item	Part Number	Quantity	Description
1	D961936205	2	Angle socket
2	D754180506	1	Lube pipe
3	D961134205	2	Screw
4	D960993190	2	Extension
5	D960969150	2	Hose
6	D935513220	2	Nipple, grease
7	D754180516	1	Lube pipe

Please check Table of Contents for use of this assembly

D722181600
Auger

Item	Part Number	Quantity	Description
1	D722181611	4	Bearing
2	D880180772	2	Support
3	D935194411	1	Bearing, needle
4	D880180768	1	Ring
5	D937976545	8	Pin, threaded
6	D935511210	3	Grease nipple
7	D935128427	4	Inner ring
8	D935183934	4	Bearing, axial needle
9	D932211701	4	O-ring
10	D935022420	1	Thrust ball bearing
11	D722181636	1	Auger, left
12	D722181643	1	Auger
13	D880180749	1	Shaft
14	D772181750	1	Bushing
15	D935194413	1	Bearing, needle
16	D880180754	1	Ring, VB500 screed
17	D932211691	2	O-ring
18	D932100729	0	Shim

Please check Table of Contents for use of this assembly

D722181600
Auger

Item	Part Number	Quantity	Description
19	D932100730	0	Shim
20	D932100732	0	Shim
21	D938690604	1	Pin
22	D937860060	4	Screw

Please check Table of Contents for use of this assembly

D756183300
Auger gear

Item	Part Number	Quantity	Description
1	D756183201	1	Outer housing
2	D756061106	1	Housing
3	D880180413	1	Cover
4	D756183315	1	Housing cover
5	D756183218	1	Hub
6	D880180419	1	Seal ring
7	D756061136	1	Drive sleeve
8	D935229706	1	Bearing
9	D935229705	1	Taper, roll bearing
10	4700116037	2	Bearing
11	D936630040	2	Ring, oil seal
12	D932211813	2	O-ring
13	D932211662	1	O-ring
14	D936032392	1	Circlip
15	D937976545	1	Pin, threaded
16	D937860264	1	Screw
17	D937860060	2	Screw
18	D930206202	1	Ring, nilos

Please check Table of Contents for use of this assembly

D756183300
Auger gear

Item	Part Number	Quantity	Description
19	4700500040	6	Cap screw, M6
20	4749900080	6	Lock washer
21	D932101171	0	Shim
22	D932101172	0	Shim
23	D932101174	0	Shim
24	D932101176	0	Shim
25	D932101327	0	Shim
26	D932101328	0	Shim
27	D932101330	0	Shim
28	D932101332	0	Shim
29	4700508019	2	Cap screw, M8
30	D951260300	1	Ring gear and pinion
31	D930435011	1	Upsetting ring
32	D938481615	1	Nut
33	D930452560	8	Screw
34	D937890151	2	Screw
35	D880180480	0	Shim
36	D880180481	0	Shim

Please check Table of Contents for use of this assembly

D756183300
Auger gear

Item	Part Number	Quantity	Description
37	D880180482	0	Shim
38	D880180483	0	Shim

D722183400
Engine support

Item	Part Number	Quantity	Description
1	D722183403	1	Gear bearing, left
2	D722183411	1	Gear bearing, right
3	D756183419	2	Profile sleeve
4	D932211745	2	O-ring
5	D938330758	8	Screw
6	4749901061	8	Lock washer
7	4700500194	8	Cap screw, M12
8	4749900032	8	Lock washer
9	D880180421	0	Distance washer
10	D880180422	0	Distance washer
11	D880180423	0	Distance washer
12	D966057210	2	Motor, Hydr

Please check Table of Contents for use of this assembly

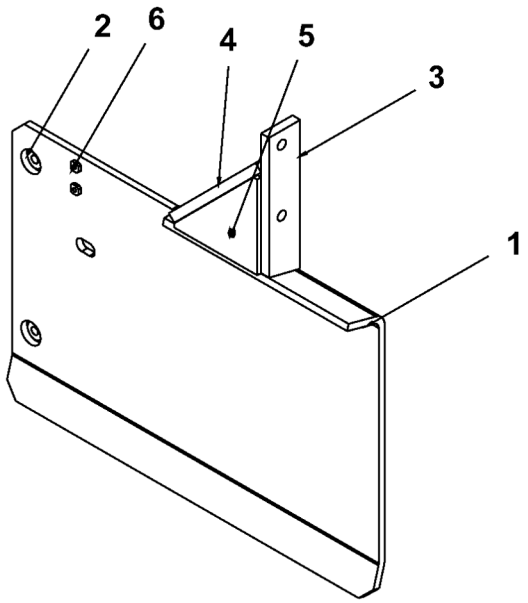

D717180010
Auger splash, left

Item	Part Number	Quantity	Description
1	D717180012	1	Auger splash plate, left
2	D717180013	2	Threaded boss
3	D717180014	1	Tapped mount plate
4	D717180015	1	Gusset plate
5	D717180029	1	Asphalt guard plate
6	D717180030	2	Nut, 1/4"

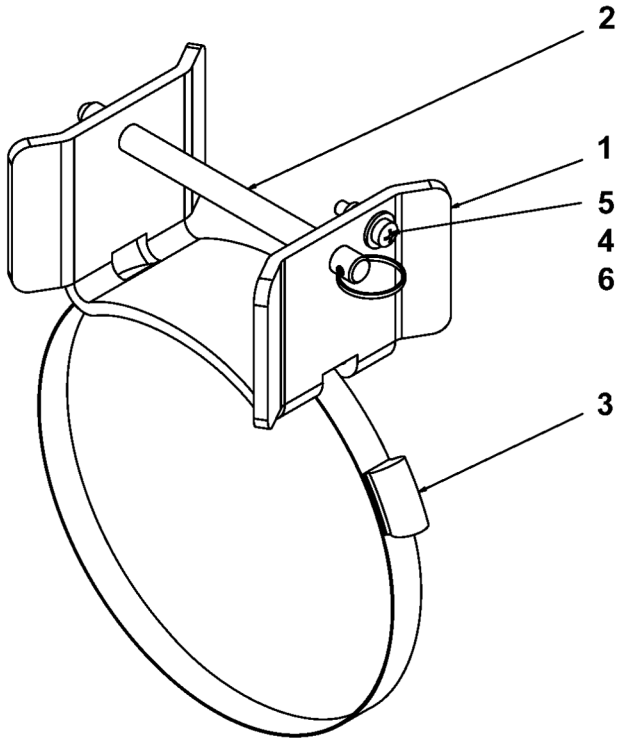

D717091018
Hose retention

Item	Part Number	Quantity	Description
1	D717091019	1	Auger hose bracket
2	D717091020	1	Quick release pin
3	D717091021	1	Clamp, hose
4	D717801142	2	Washer, 10
5	D717801240	1	Screw, M10
6	D717800897	1	Lock nut, M10
7	D717800897	1	Lock nut, M10
8	D717801142	2	Washer, 10
9	D717801240	1	Screw, M10

Please check Table of Contents for use of this assembly

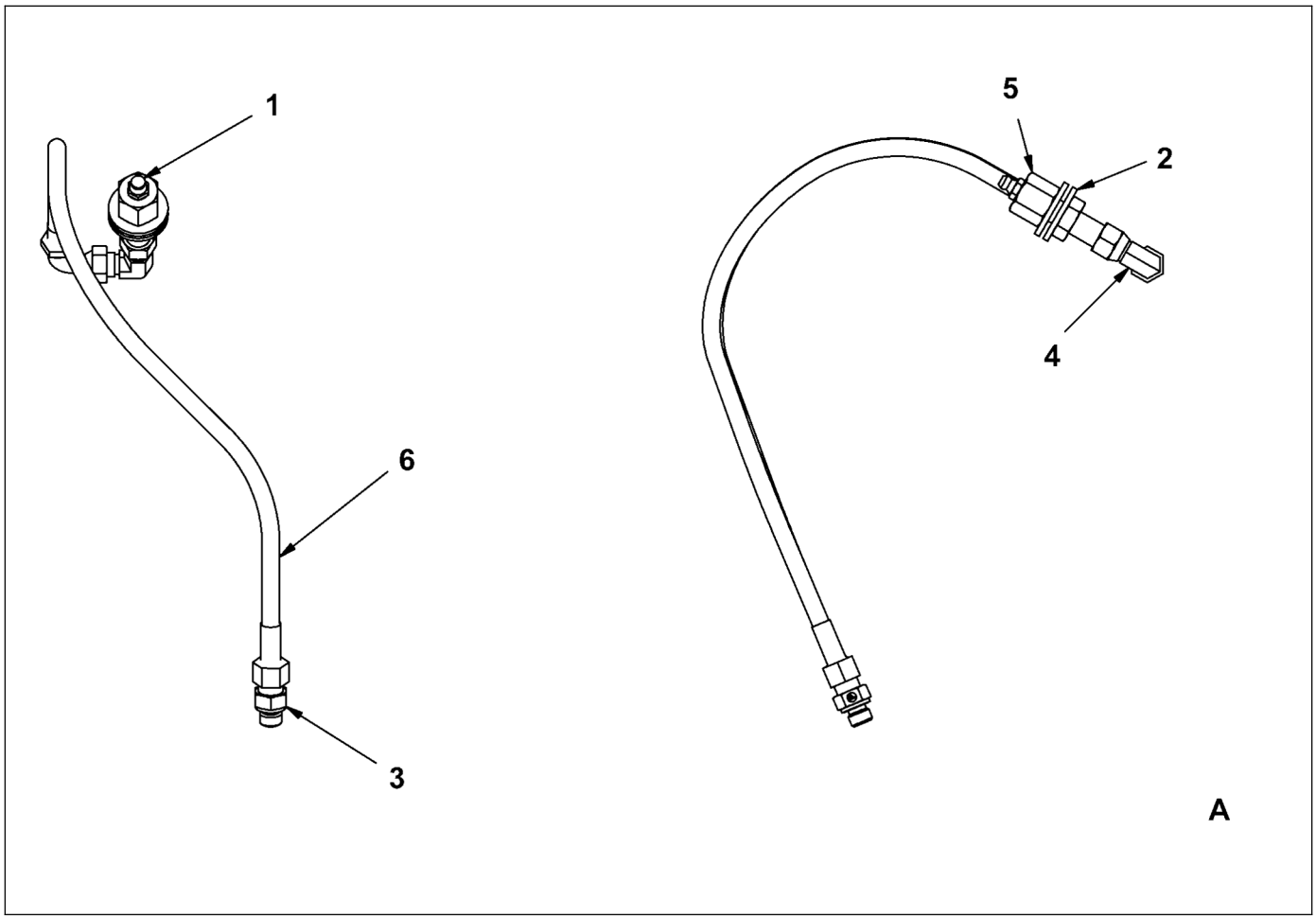

4812200217
Auger lubrication

Item	Part Number	Quantity	Description
1	D717061027	2	Zerk
2	D717801086	4	Flat washer, 0.5"
3	4812200224	2	Adapter, male-male
4	4812200226	2	Elbow
5	4812200233	2	Adapter, bulkhead
6	4812200216	2	Auger grease hose

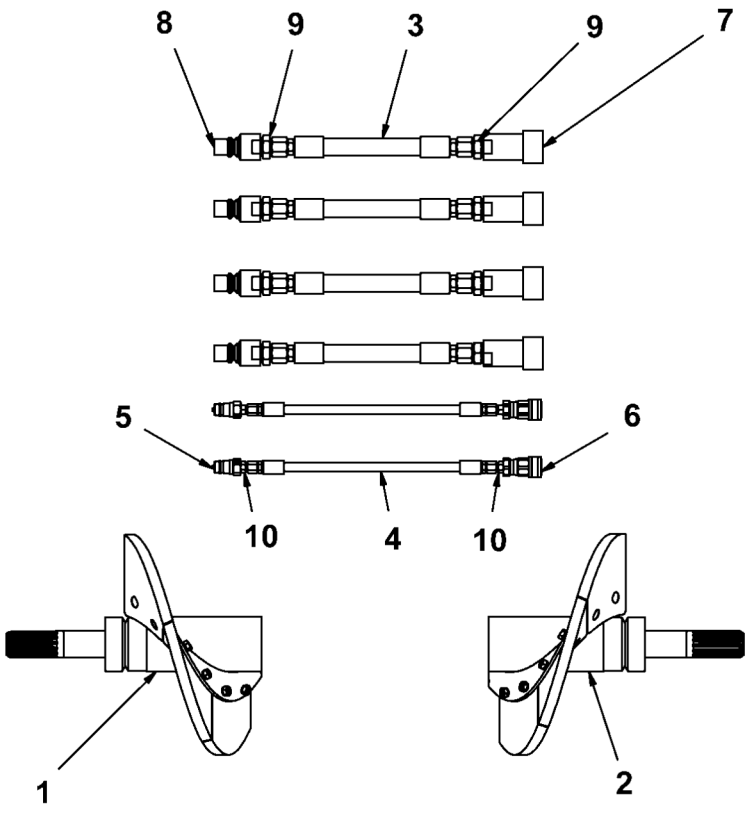

D717903008
Auger Extensions, 11.4"

Item	Part Number	Quantity	Description
1	D722181900	1	Auger, left, 290mm
2	D722182000	1	Auger, right, 290mm
3	D717903071	4	Hose, 12
4	D717903078	2	Hose, 06
5	D717802675	2	Coupling, male, 08-10
6	D717902668	2	Coupling
7	D717802654	4	Body, 16-16
8	D717802647	4	Nipple, 16-16
9	D717802689	8	Adapter, 12-16
10	D717800323	4	Adapter, 06-06
134	D717903071	1	Hose, 12

Please check Table of Contents for use of this assembly

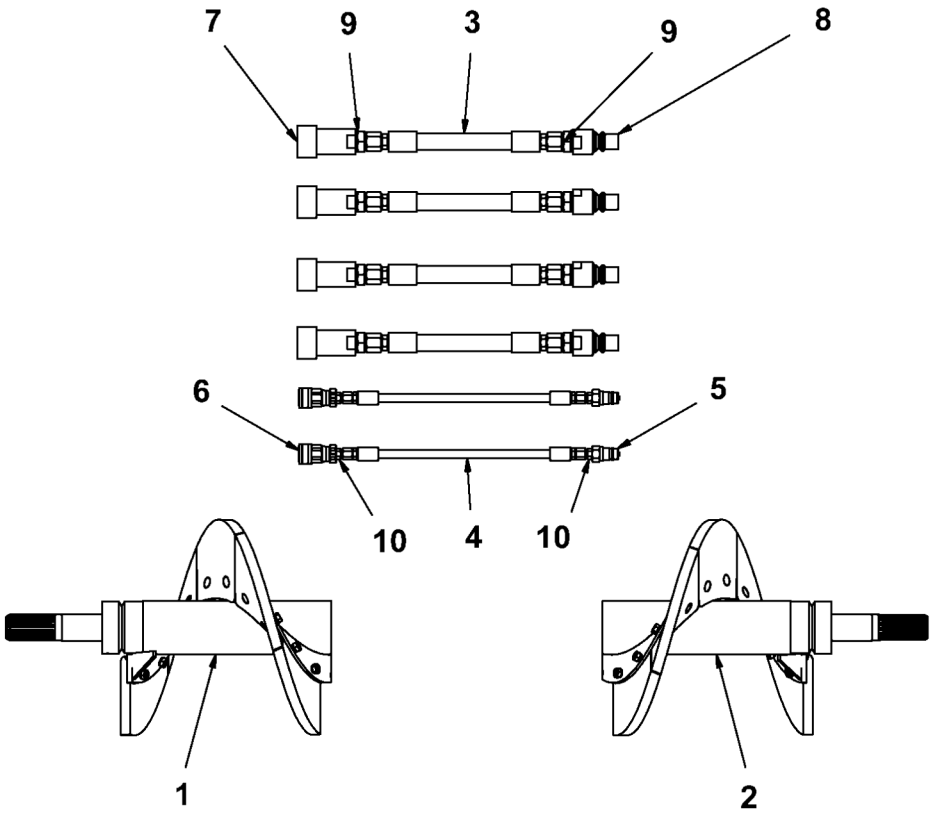

D717903015
Auger Extensions, 17"

Item	Part Number	Quantity	Description
1	D722182100	1	Auger, left, 434mm
2	D722182200	1	Auger, right, 434mm
3	D717903071	4	Hose, 12
4	D717903078	2	Hose, 06
5	D717802675	2	Coupling, male, 08-10
6	D717802668	2	Coupling, female, 08-10
7	D717802654	4	Body, 16-16
8	D717802647	4	Nipple, 16-16
9	D717802689	8	Adapter, 12-16
10	D717800323	4	Adapter, 06-06

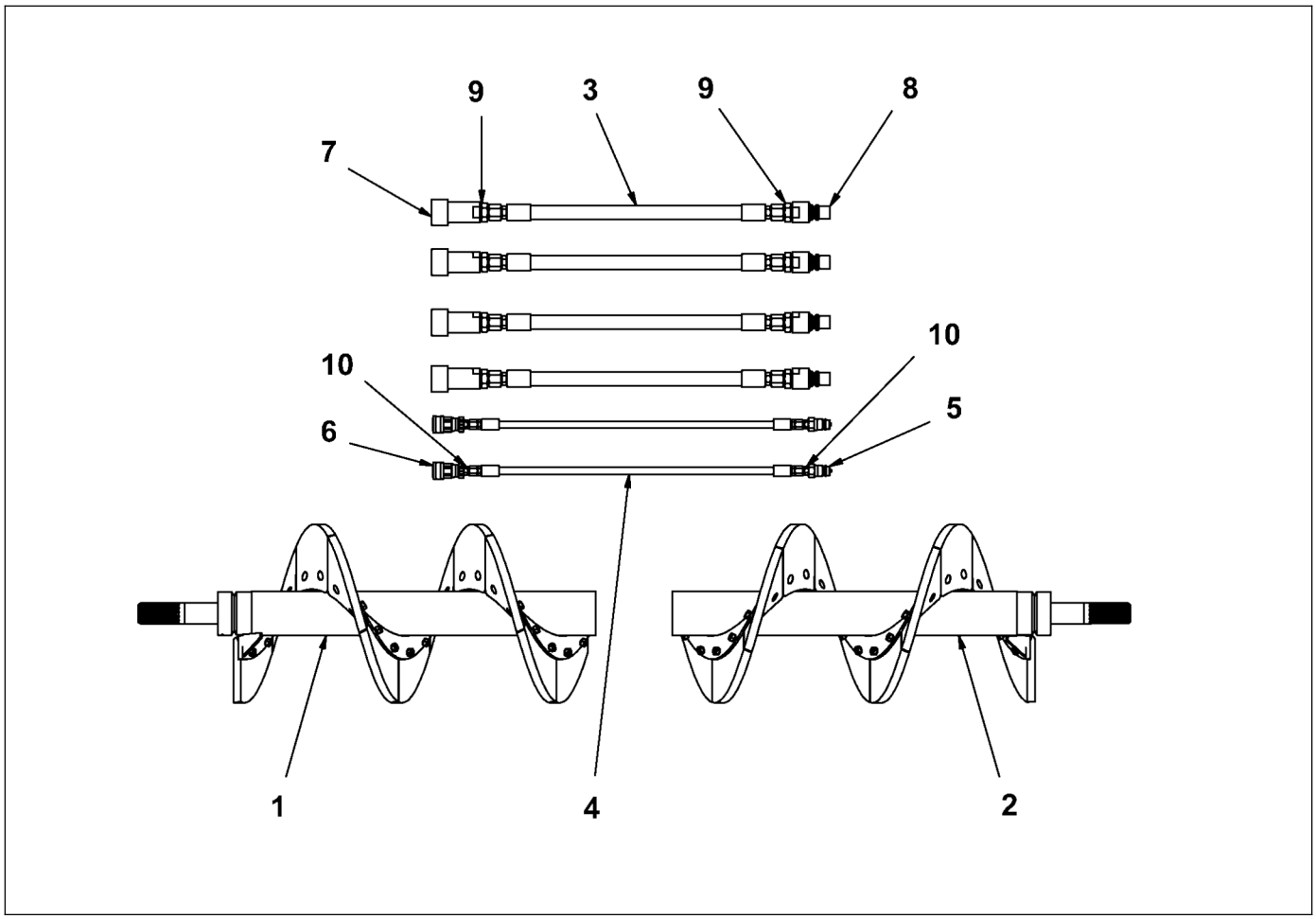

D717903022
Auger extensions, 34.1"

Item	Part Number	Quantity	Description
1	D722182300	1	Auger, left, 868mm
2	D722182400	1	Auger, right, 868mm
3	D717903085	4	Hose extension, 12
4	D717903092	2	Hose, 06
5	D717802675	2	Coupling, male, 08-10
6	D717802668	2	Coupling, female, 08-10
7	D717802654	4	Body, 16-16
8	D717802647	4	Nipple, 16-16
9	D717802689	8	Adapter, 12-16
10	D717800323	4	Adapter, 06-06

Please check Table of Contents for use of this assembly

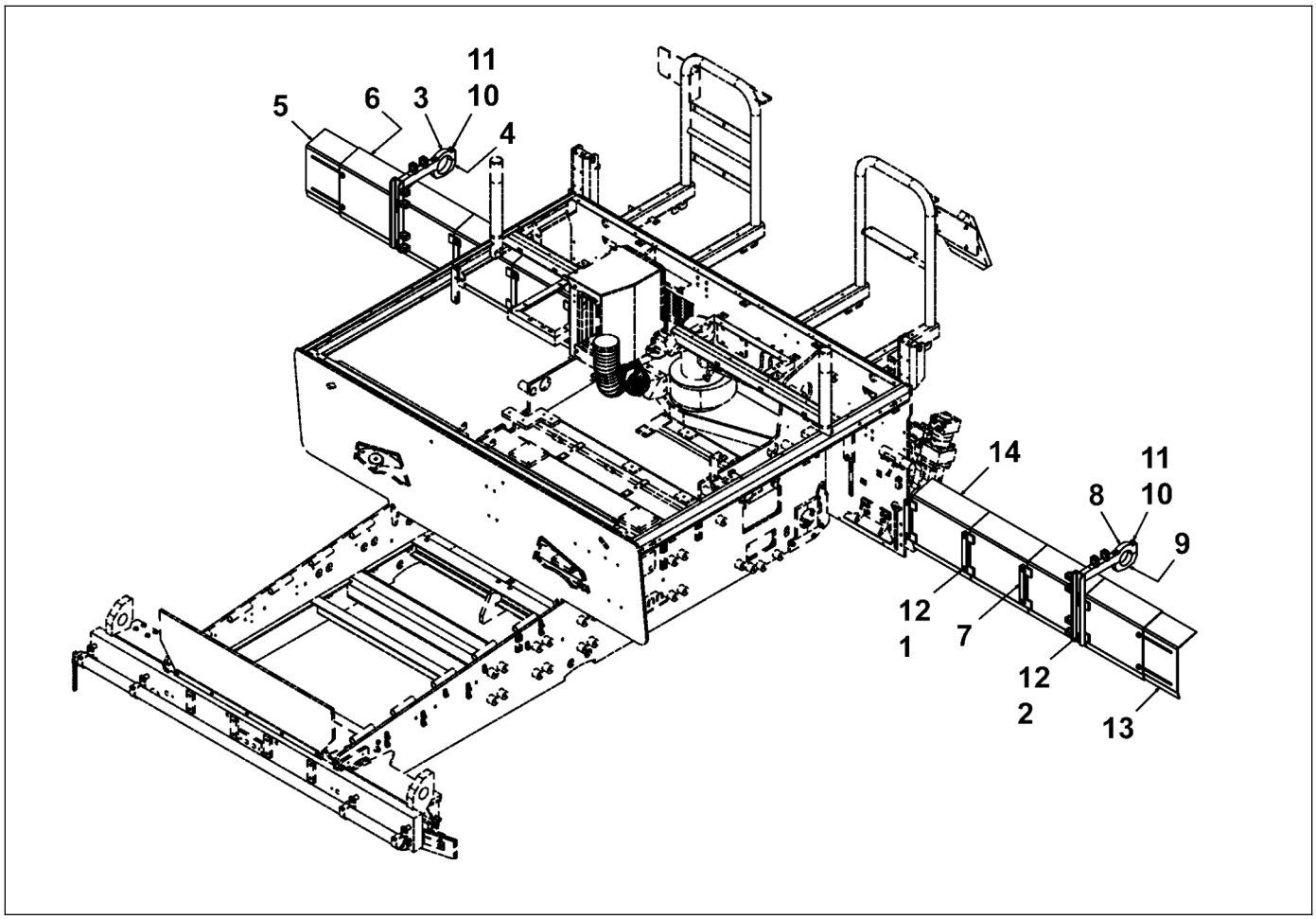

D717903500
Tunnel extensions kit

Item	Part Number	Quantity	Description
1	D717800743	16	Screw, 1/2"
2	D717800736	4	Screw, 1/2"
3	4812222676	1	Extension support, right
4	D717903511	1	Clamp, right extension
5	D717903506	1	Extension, right
6	D717903501	4	Splash extension, right
7	D717903515	8	Clamp
8	4812222674	1	Extension support, left
9	D717903514	1	Clamp, left extension
10	D717801079	4	Narrow washer, 0.625"
11	D717802437	4	Screw, 5/8"
12	D717801086	20	Flat washer, 0.5"
13	D717903507	1	Extension, left
14	D717903502	4	Splash extension, left

Please check Table of Contents for use of this assembly

D717951674
Left flight kit

Item	Part Number	Quantity	Description
1	D722182711	1	Wear part, left
2	D937634274	2	Screw, F30
3	4700928847	2	Nut
4	4749900025	4	Lock washer

Please check Table of Contents for use of this assembly

D717951681
Right flight kit

Item	Part Number	Quantity	Description
1	D722182811	1	Wear part, right
2	D937634274	2	Screw, F30
3	4700928847	2	Nut
4	4749900025	4	Lock washer

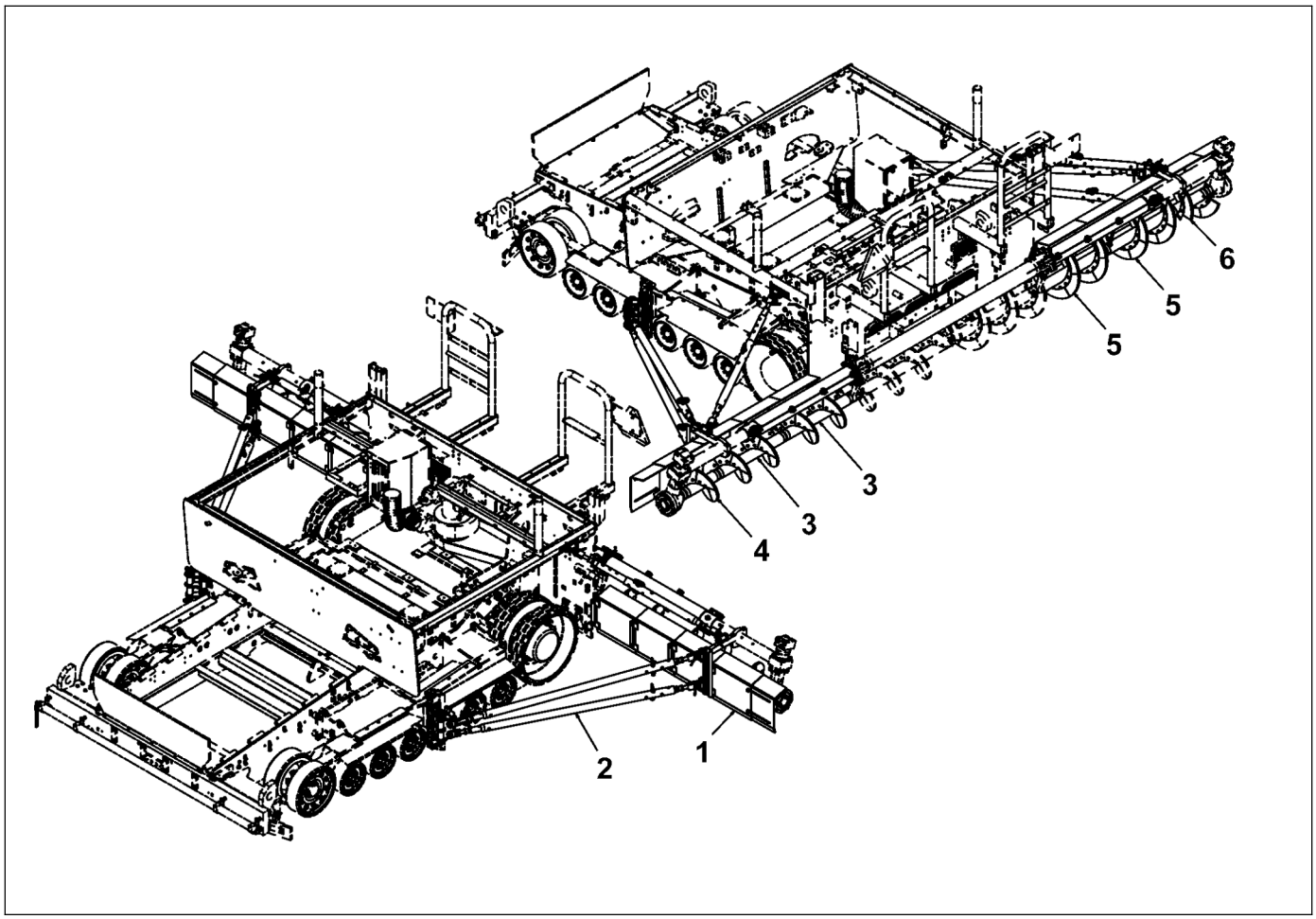

4812222659
Wide-width paving kit

Item	Part Number	Quantity	Description
1	D717903500	1	Tunnel extensions kit
2	4812222662	1	Mounting components kit
3	D722182300	2	Auger, left, 868mm
4	D722182100	1	Auger, left, 434mm
5	D722182400	2	Auger, right, 868mm
6	D722182200	1	Auger, right, 434mm

Please check Table of Contents for use of this assembly

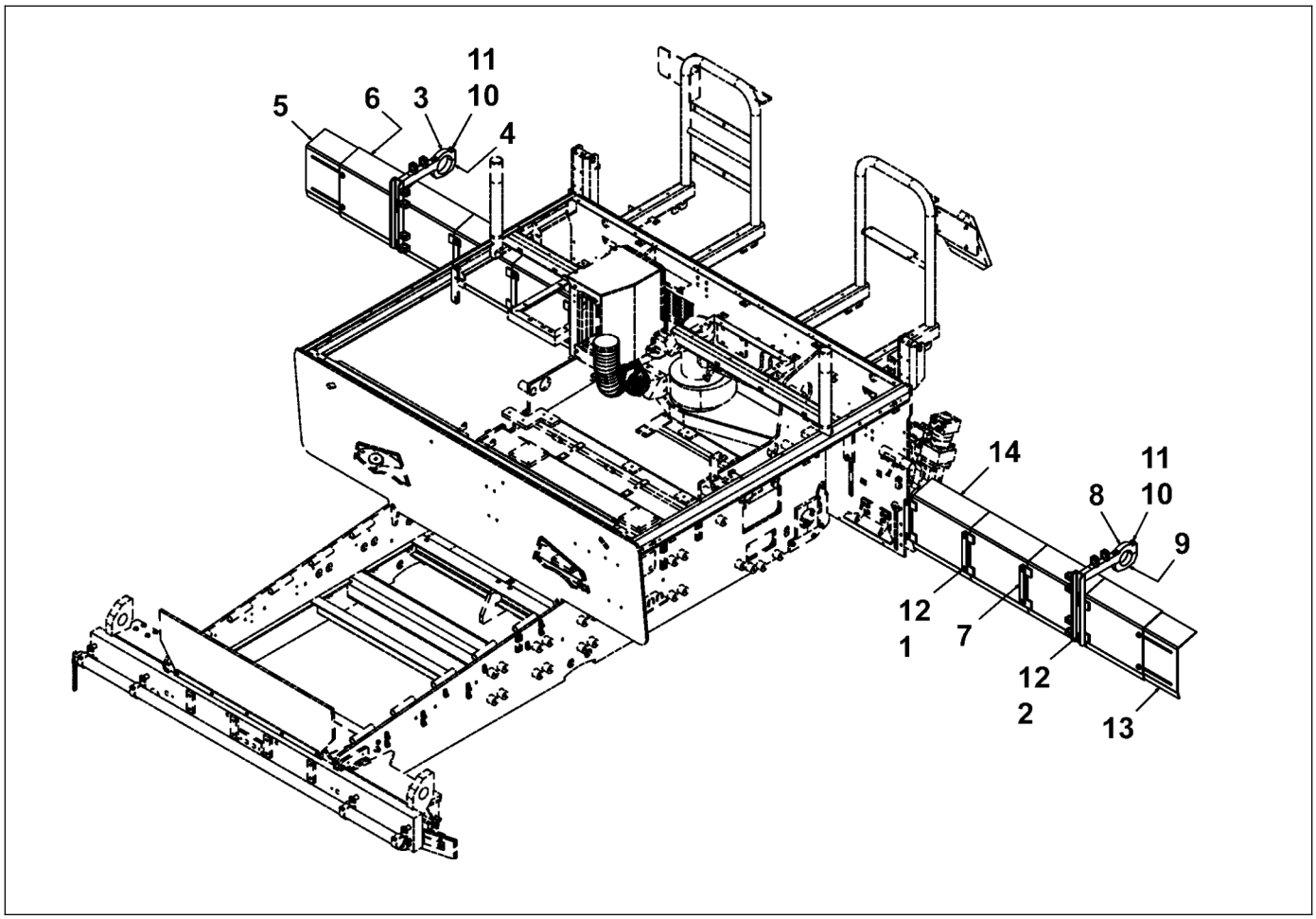

D717903500
Tunnel extensions kit

Item	Part Number	Quantity	Description
1	D717800743	16	Screw, 1/2"
2	D717800736	4	Screw, 1/2"
3	4812222676	1	Extension support, right
4	D717903511	1	Clamp, right extension
5	D717903506	1	Extension, right
6	D717903501	4	Splash extension, right
7	D717903515	8	Clamp
8	4812222674	1	Extension support, left
9	D717903514	1	Clamp, left extension
10	D717801079	4	Narrow washer, 0.625"
11	D717802437	4	Screw, 5/8"
12	D717801086	20	Flat washer, 0.5"
13	D717903507	1	Extension, left
14	D717903502	4	Splash extension, left

Please check Table of Contents for use of this assembly

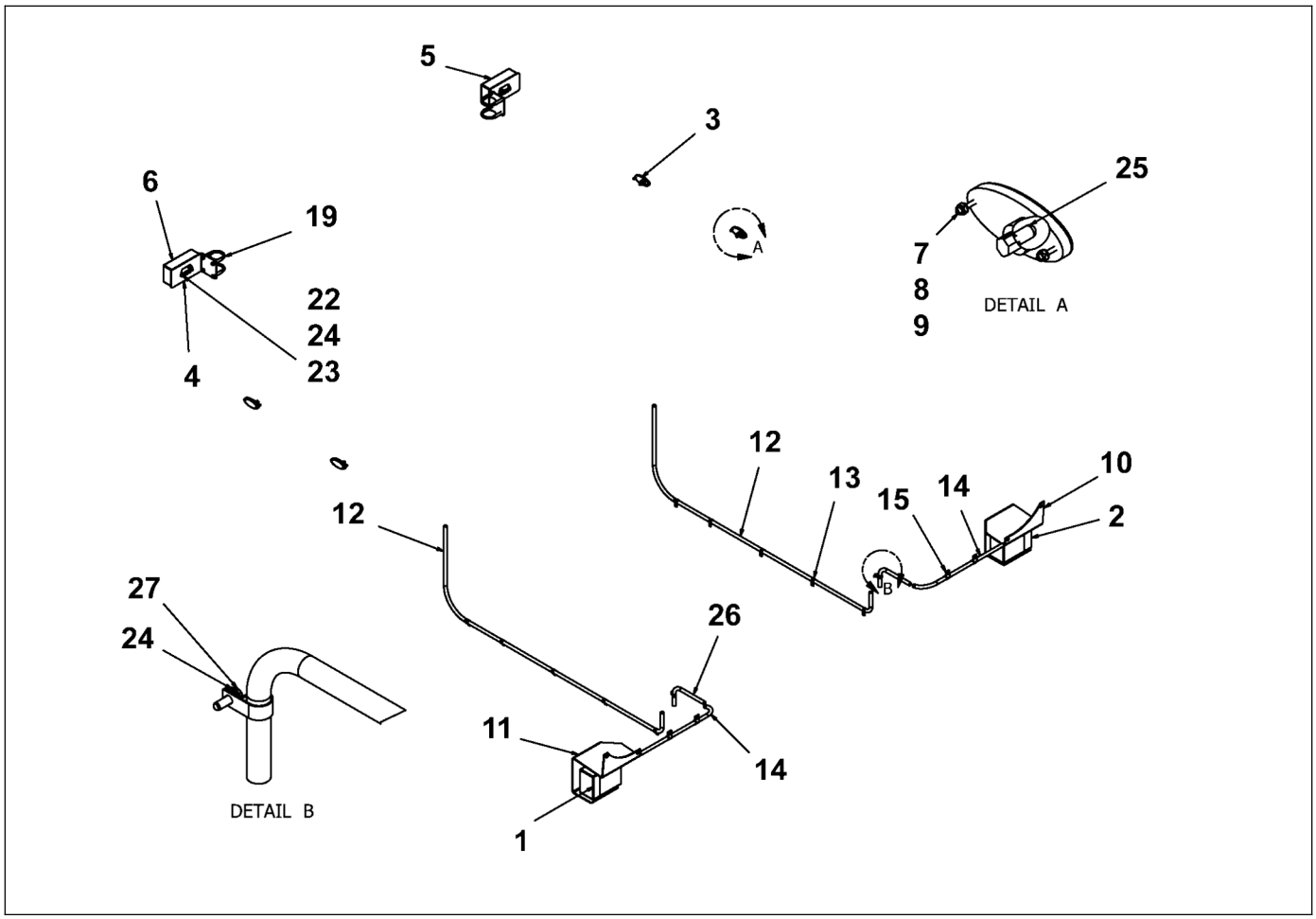

D717906000
Roading lights

Item	Part Number	Quantity	Description
1	D717906005	1	Head light, right side
2	D717906004	1	Head light, left side
3	D717906003	4	Light, side amber
4	D717906009	2	Bracket, tail lights
5	D717906001	1	Light, tail left side
6	D717906002	1	Light, tail right side
7	D717801380	8	Screw, M6
8	D717801100	8	Washer, #6
9	D717800876	8	Lock nut, M6
13	D717906010	8	Clamp, 3/4"
19	D717906014	4	U-bolt, 3/8"
20	D717101516	1	Harness, rh front headlight
21	D717101517	1	Harness, lh front headlight
22	D717906015	2	Plate
23	D717800680	4	Screw, 1/4"
24	D717801058	4	Narrow flat washer, 0.25"
25	D717906006	4	Bulb, amber
28	4812200311	1	Roading lights weldment, left

Please check Table of Contents for use of this assembly

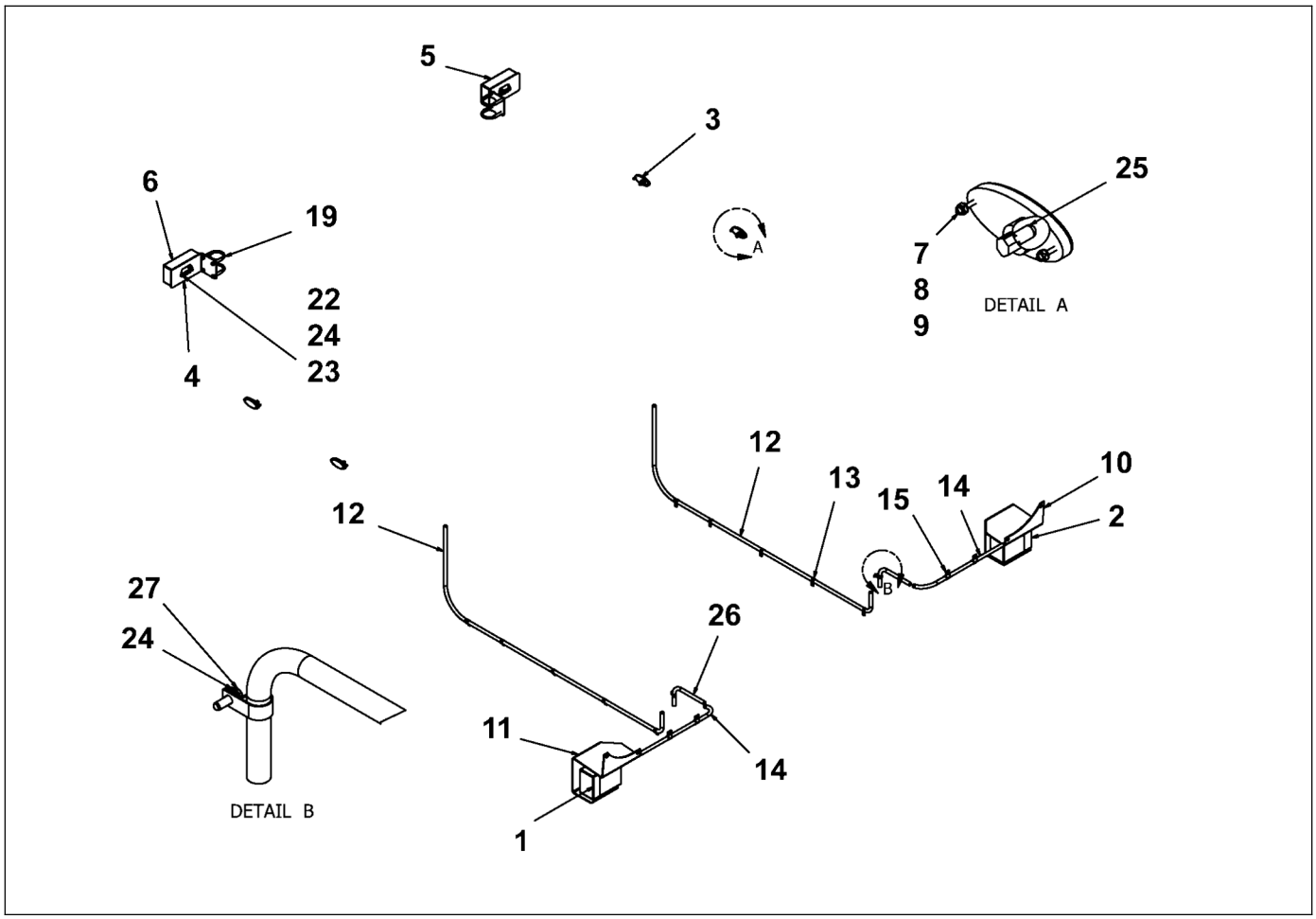

D717906000
Roading lights

Item	Part Number	Quantity	Description
29	4812200312	1	Roading lights weldment, right
30	4812200313	2	Conduit, 1/2"
31	D717104516	4	Fitting straight, 1/2"
32	4812200314	2	Roading lights harness
33	4812200315	4	Conduit, 1/2"
34	D717101019	2	Grommet

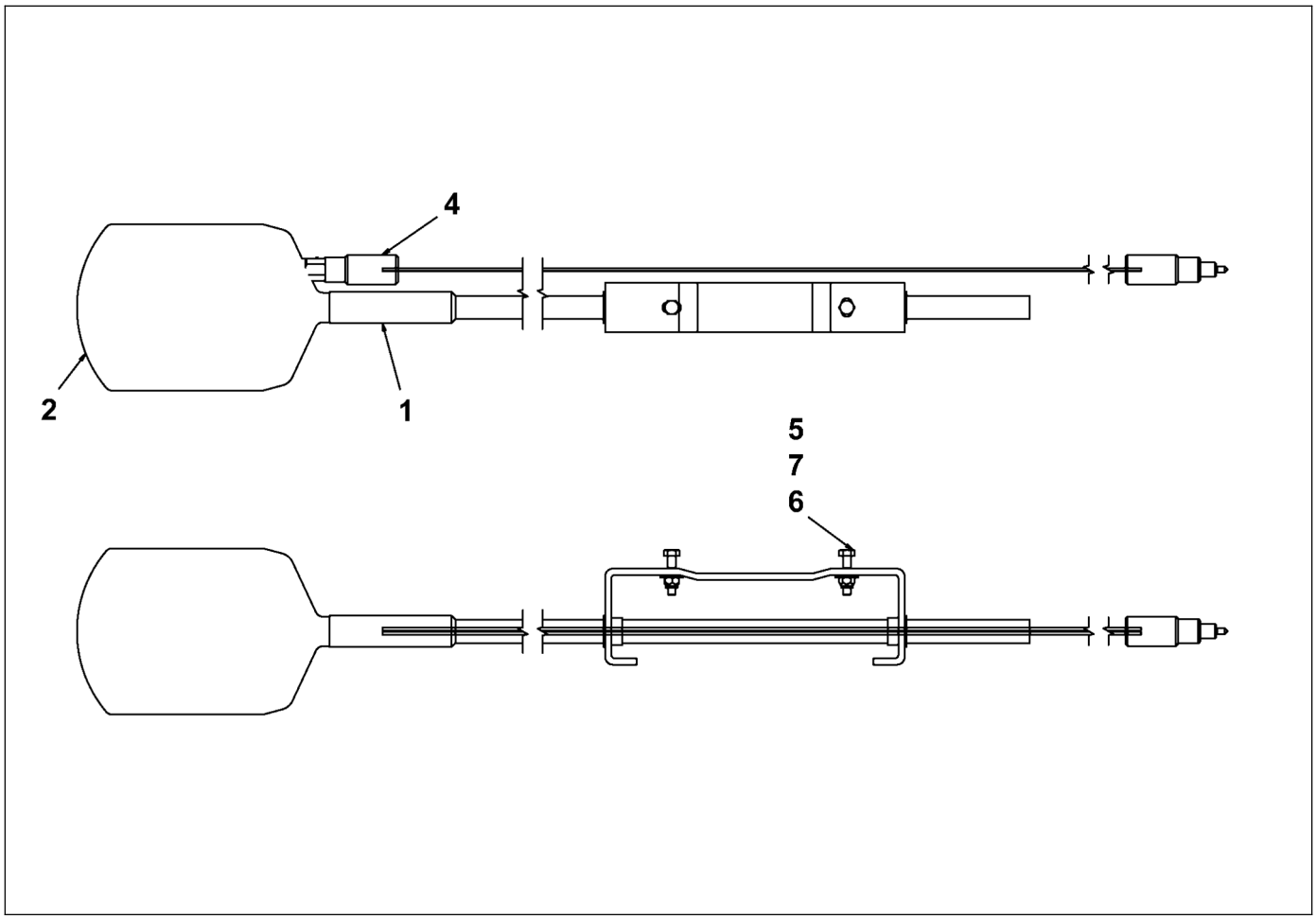

D717906500
Warning beacon

Item	Part Number	Quantity	Description
1	D717906503	1	Pole mount, warning beacon
2	D717906501	1	Rotating beacon
4	D717906505	1	Harness
5	D717800911	2	Nut, 1/4"
6	D717801212	2	Screw, 1/4"
7	D717801310	2	Washer, 1/4"

Please check Table of Contents for use of this assembly

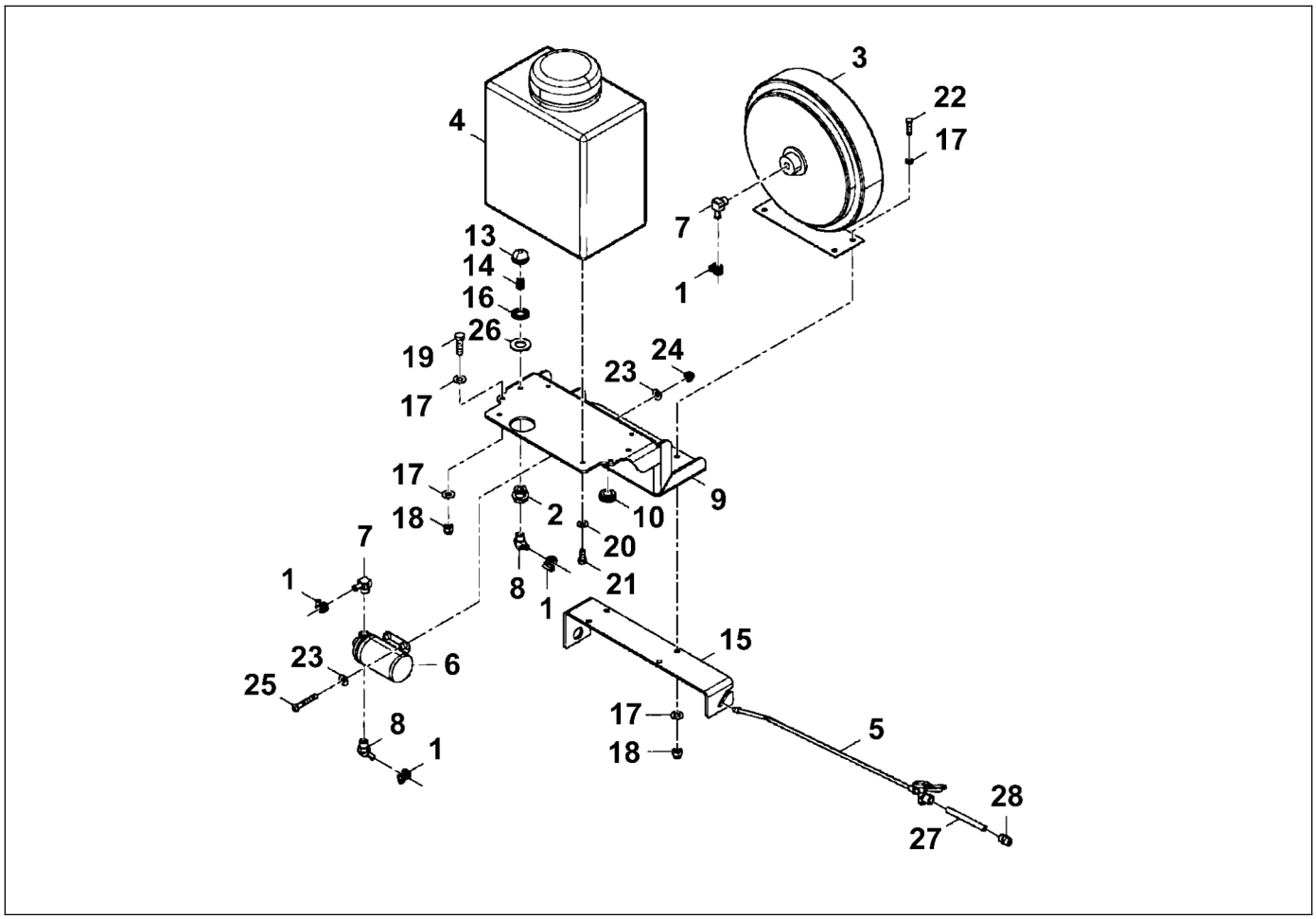

D717909500
Wash down

Item	Part Number	Quantity	Description
1	D717909516	4	Clamp, worm drive
2	D717909517	1	Coupling, anchor
3	D717909505	1	Hose reel
4	D717909501	1	Tank
5	D717909503	1	Spray wand
6	D717909502	1	Pump
7	D717909518	2	Hose barb
8	D717909519	2	Beaded hose barb
9	D717909512	1	Mount, release agent tank
10	D717909507	1	Grommet
11	D717909508	1	Wash down suction hose
12	D717909509	1	Hose, pump to hose reel
13	D717909511	1	Strainer, suction
14	D717909521	1	Nipple, 3/8"
15	D717909513	1	Mount, wash down spray wand
16	D717909520	1	Washer, seal
17	D717801044	16	Narrow washer, 0.38"
18	D717800834	8	Lock nut, 3/8"

Please check Table of Contents for use of this assembly

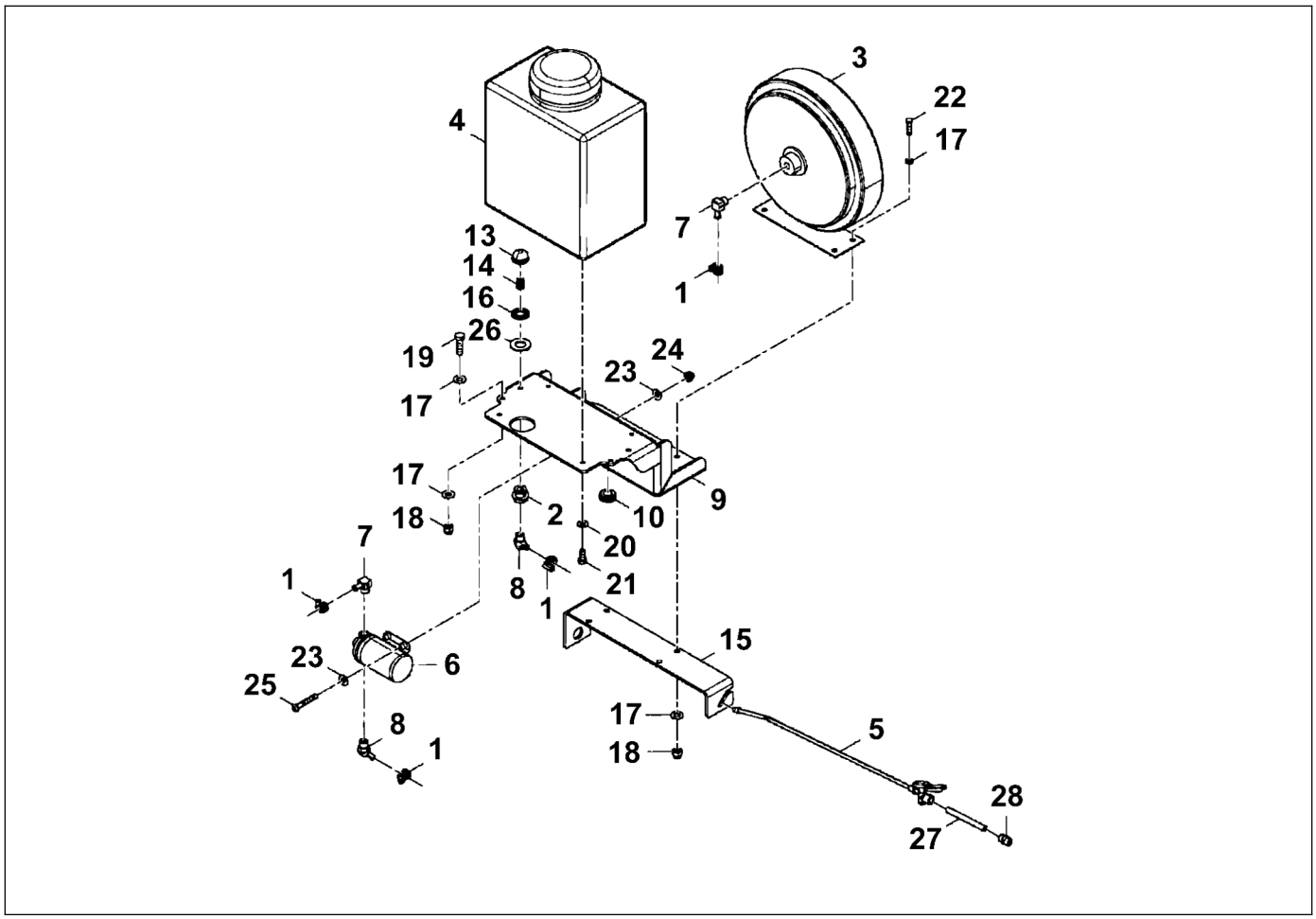

D717909500
Wash down

Item	Part Number	Quantity	Description
19	D717800603	4	Screw, 3/8"
20	D717801051	4	Narrow washer, 0.313"
21	D717800568	4	Screw, 5/16"
22	D717800596	4	Screw, 3/8"
23	D717801142	8	Washer, 10
24	D717800897	4	Lock nut, M10
25	D717801247	4	Screw, M10
26	D717801065	1	Washer, 1"
27	D717909514	1	Nipple, 3/8"
28	D717909515	1	Coupling, 1/4"

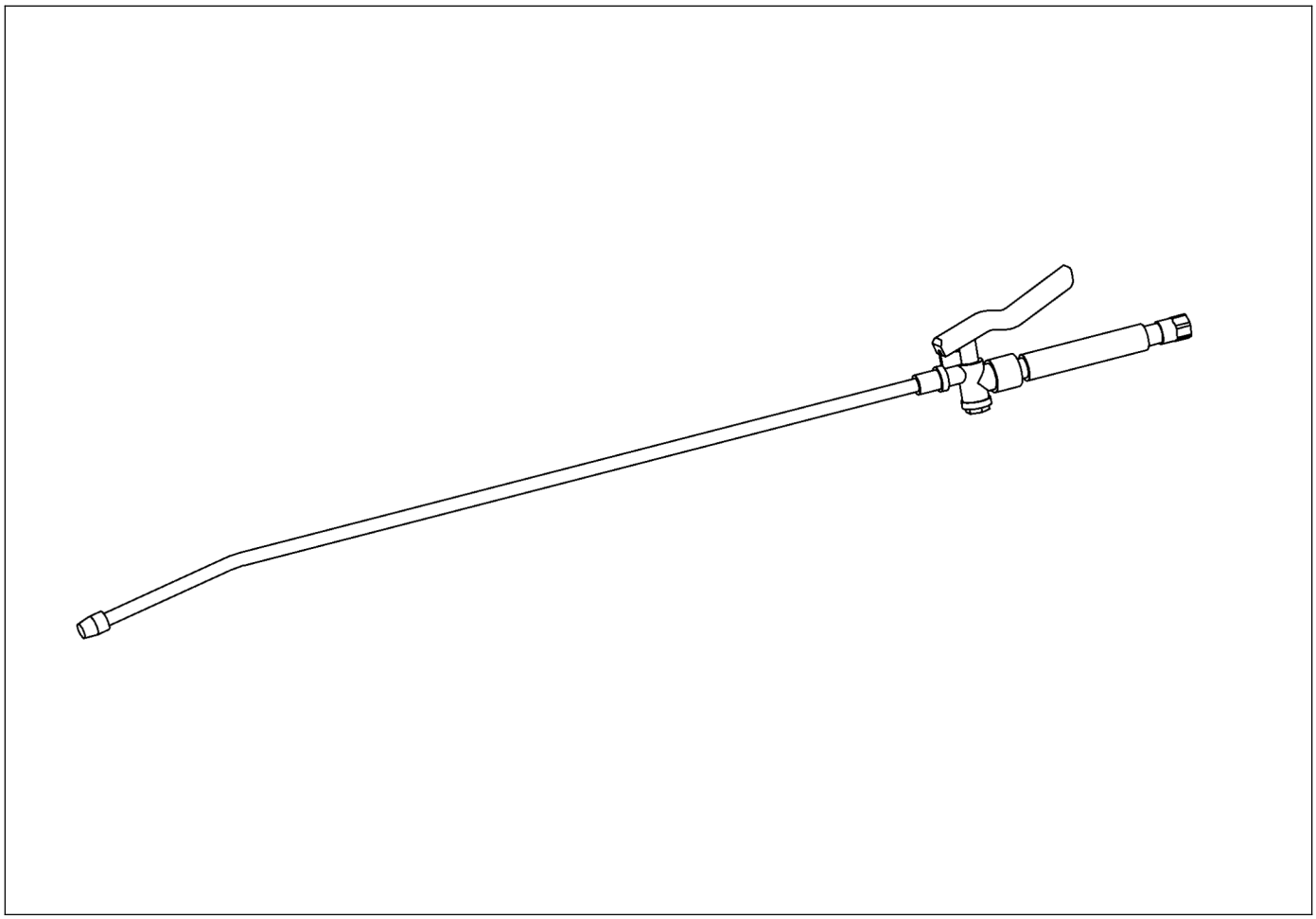

D717909503
Spray wand

Item	Part Number	Quantity	Description
4	D717951933	1	Cap, brass
5	D717951940	1	Tip, spraying
6	4812200317	1	Valve handle
7	4812200318	1	Coupling

Please check Table of Contents for use of this assembly

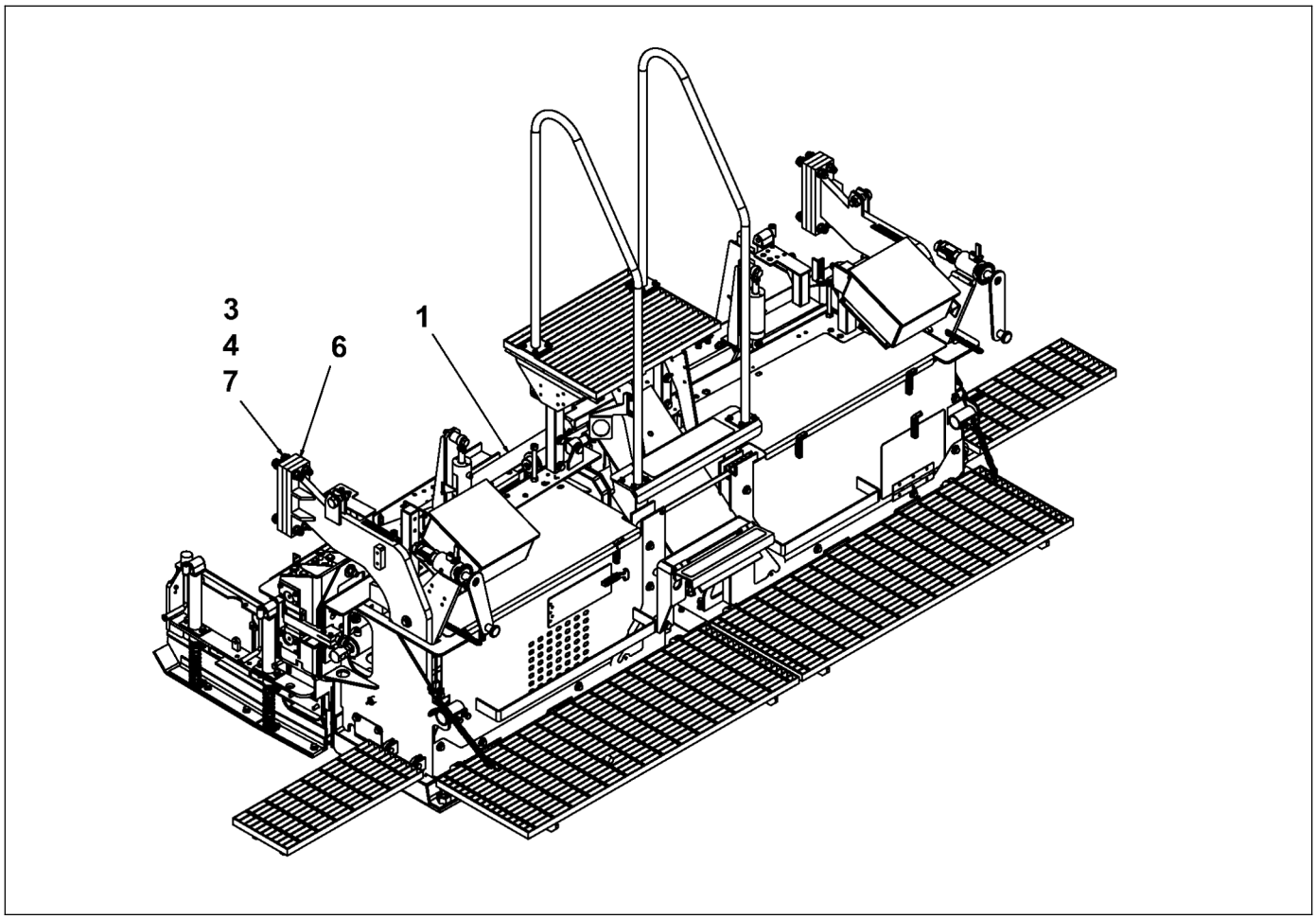

D626000001
Screed sensor

Item	Part Number	Quantity	Description
1	D626000000	1	Carlson screed
3	D717800841	8	Lock nut, 3/4"
4	D717801072	16	Narrow washer, 0.75"
6	4812220098	2	Spacer, 1"
7	4812220161	8	Cap screw, 3/4"

Please check Table of Contents for use of this assembly

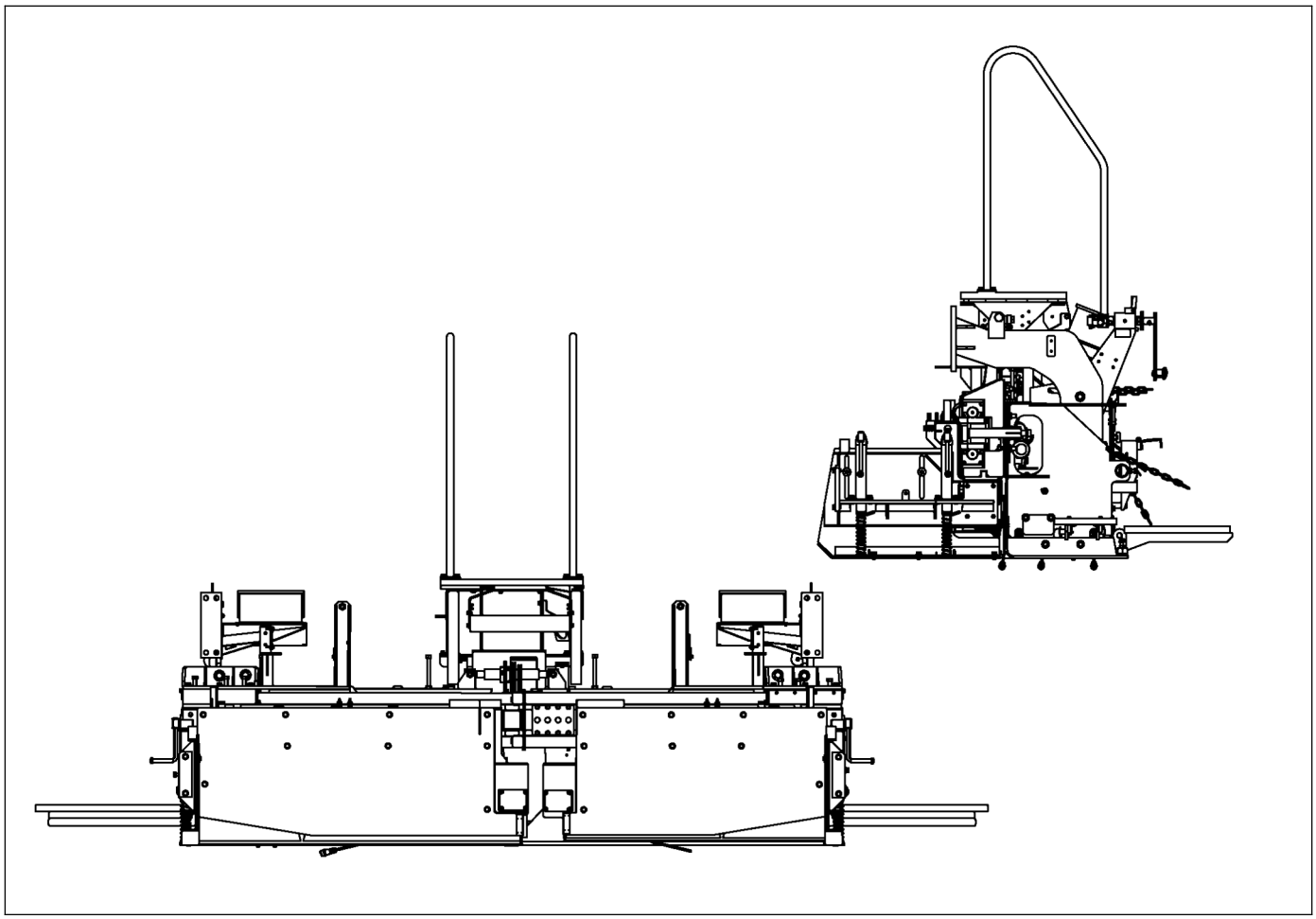

D626000000
Carlson screed

Item	Part Number	Quantity	Description
1	D626000009	2	Mount, Topcon
2	D717102013	4	Feeder controller
3	D717102014	4	Potentiometer
4	D717102015	1	Potentiometer knob
5	4812200155	1	EZIV 12" screed extension with heat, left
6	4812200156	1	EZIV 12" screed extension with heat, right
7	4812200157	1	EZIV 18" screed extension with heat, left
8	4812200158	1	EZIV 18" screed extension with heat, right
9	4812200159	1	EZIV 24" screed extension with heat, left
10	4812200160	1	EZIV 24" screed extension with heat, right
11	4812200161	1	EZIV wide width kit
12	4812200162	1	EZIV 6" cut off shoe, right
13	4812200163	1	EZIV 6" cut off shoe, left
14	4812200164	1	EZIV 6" cut off shoe extension
15	4812200165	1	EZIV counter-clockwise depth crank screw long
16	4812200166	1	EZIV clockwise depth crank screw long
17	4812200167	1	EZIV heated endgate kit
18	4812200168	1	EZIV safety endgate, right

Please check Table of Contents for use of this assembly

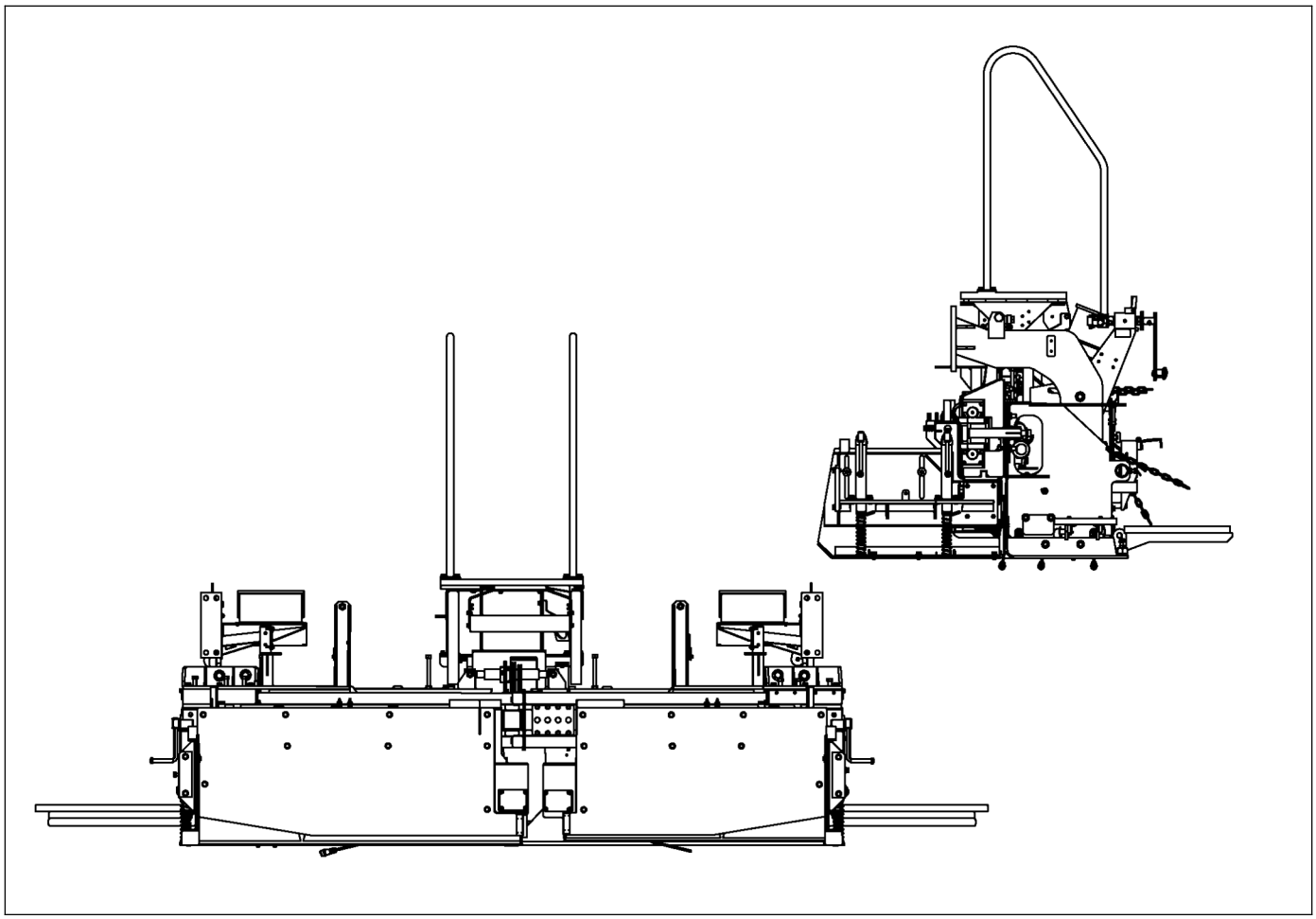

D626000000
Carlson screed

Item	Part Number	Quantity	Description
19	4812200169	1	EZIV safety endgate, left
20	4812200170	1	EZIV heat endgate safety kit
21	4812200171	1	EZR counter-clockwise depth crank, long, 106+
22	4812200172	1	EZR clockwise depth crank, long, 106+
23	4812200173	1	EZR counter-clock depth crank, long, 101-105
24	4812200174	1	EZR clockwise depth crank, long, 101-105
25	4812200175	1	EZR heated endgate kit
26	4812200176	1	EZR safety edge float, right
27	4812200177	1	EZR safety edge float with heat, right
28	4812200178	1	EZR safety edge complete, right
29	4812200179	1	EZR safety edge complete item
30	4812200180	1	EZR safety edge complete item
31	4812200181	1	EZR safety edge complete item
32	4812200182	1	EZR safety edge complete item
33	4812200183	1	EZR safety edge complete item
34	4812200184	1	EZR safety edge complete item
35	4812200185	1	EZR safety edge complete item
36	4812200186	1	EZR safety edge complete item

Please check Table of Contents for use of this assembly

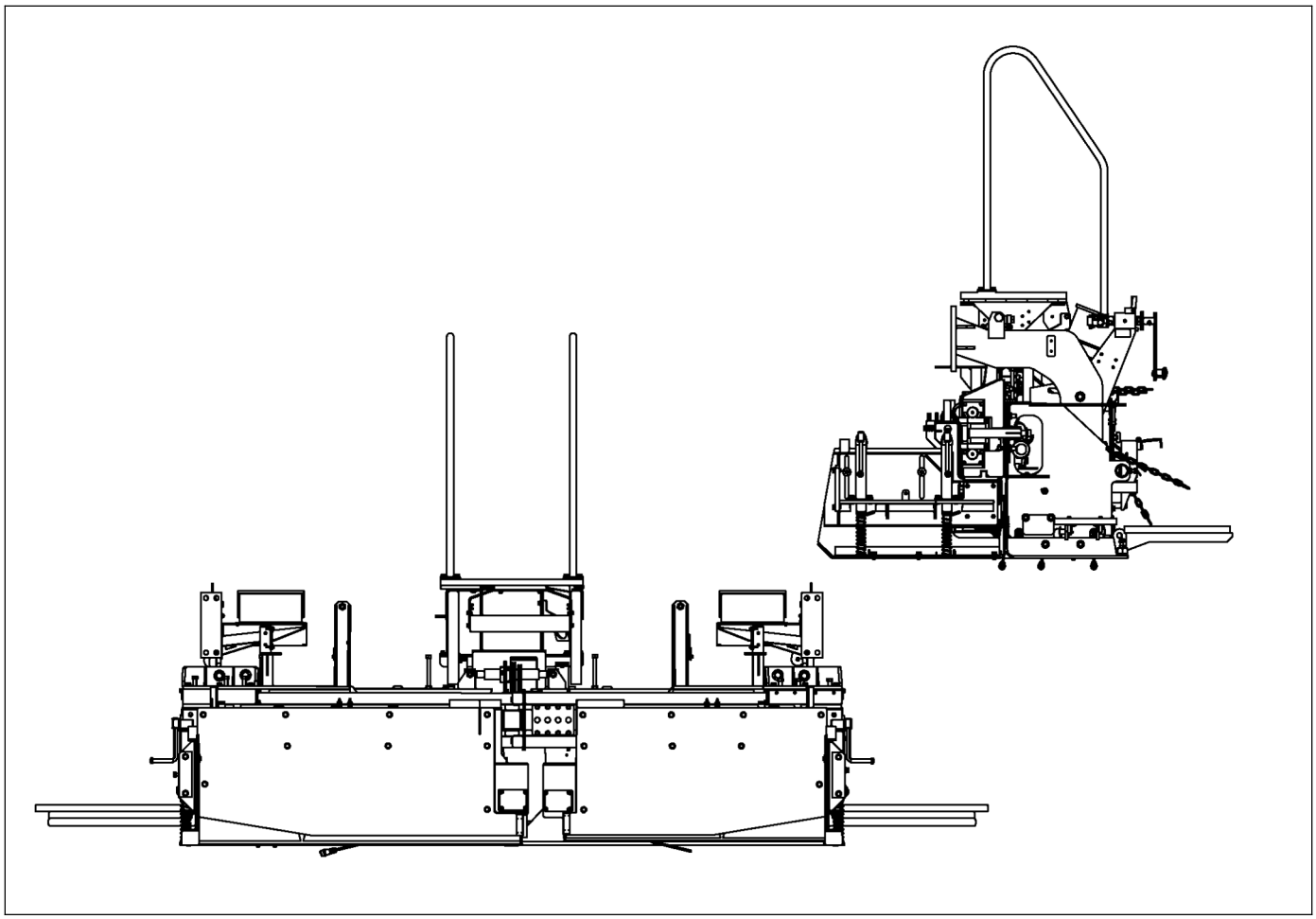

D626000000
Carlson screed

Item	Part Number	Quantity	Description
37	4812200187	1	EZR safety edge complete item
38	4812200188	1	EZR safety edge float, left
39	4812200189	1	EZR safety edge float with heat, left
40	4812200190	1	EZR safety edge complete, left
41	4812200191	1	EZR safety edge complete item
42	4812200294	1	Easy IV screed assembly
43	4812200296	1	EZR sceed assembly
	D717102501	1	Topcon leveling control
	D717102000	1	Auger & conveyor controls, moba
	D717901501	1	Non contacting SAS
	D717905500	1	Option, Balloon lights
	4812200264	1	MOBA-matic Leveling System
	D717952458	1	Screed disconnect kit
107	D717102001	4	Controller, feed system

Please check Table of Contents for use of this assembly

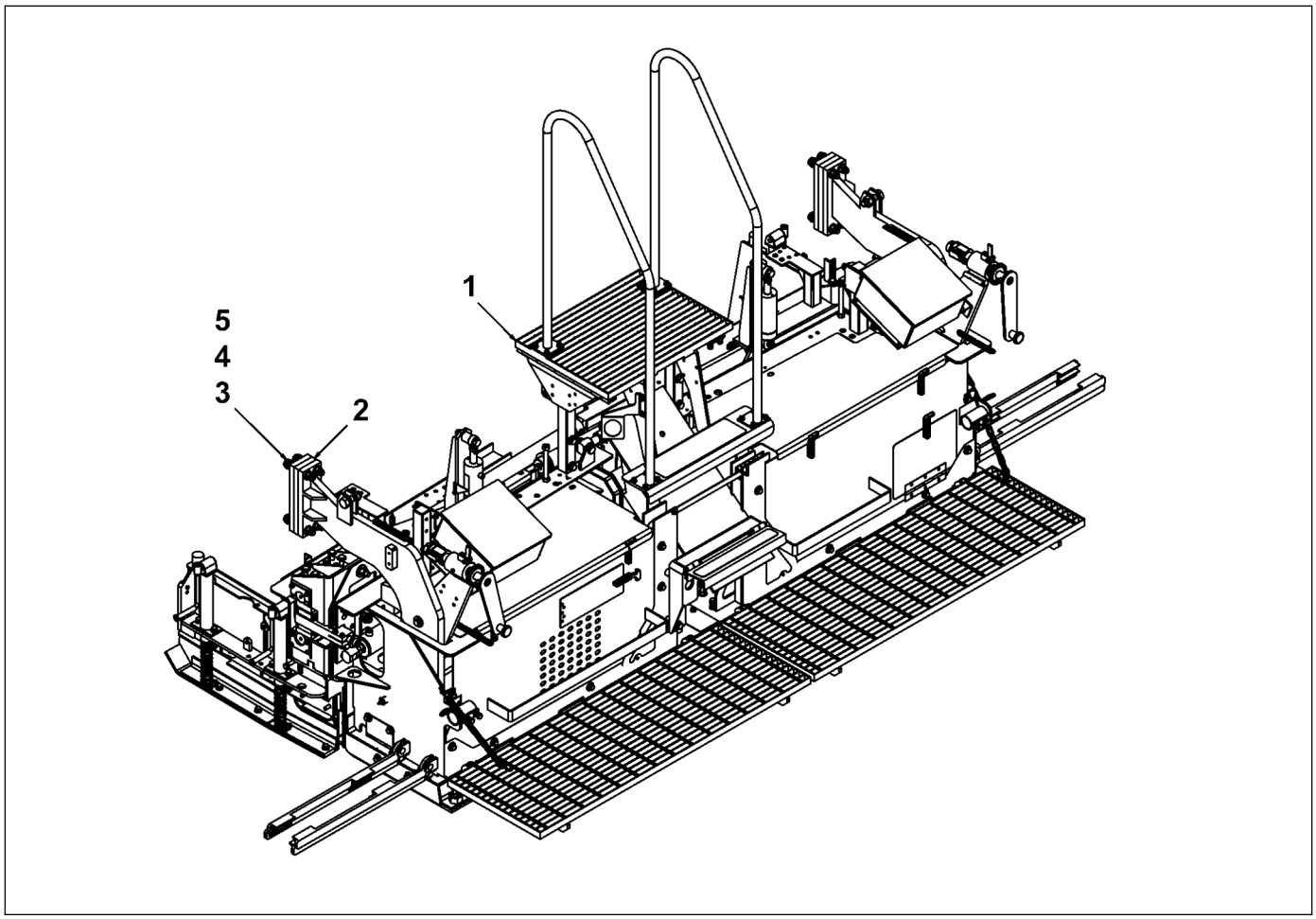

4812200294
Easy IV screed assembly

Item	Part Number	Quantity	Description
1	4812200293	1	Carslon EZ-IV screed assembly
2	4812220098	4	Spacer, 1"
3	4812220161	8	Cap screw, 3/4"
4	D717800841	8	Lock nut, 3/4"
5	D717801072	16	Narrow washer, 0.75"
6	D717920534	2	Hose assembly, #95, #96, 06
7	D717920541	1	Hose assembly, #97, 04
8	D717920632	2	Hose assembly, #114, #115, 08

Please check Table of Contents for use of this assembly

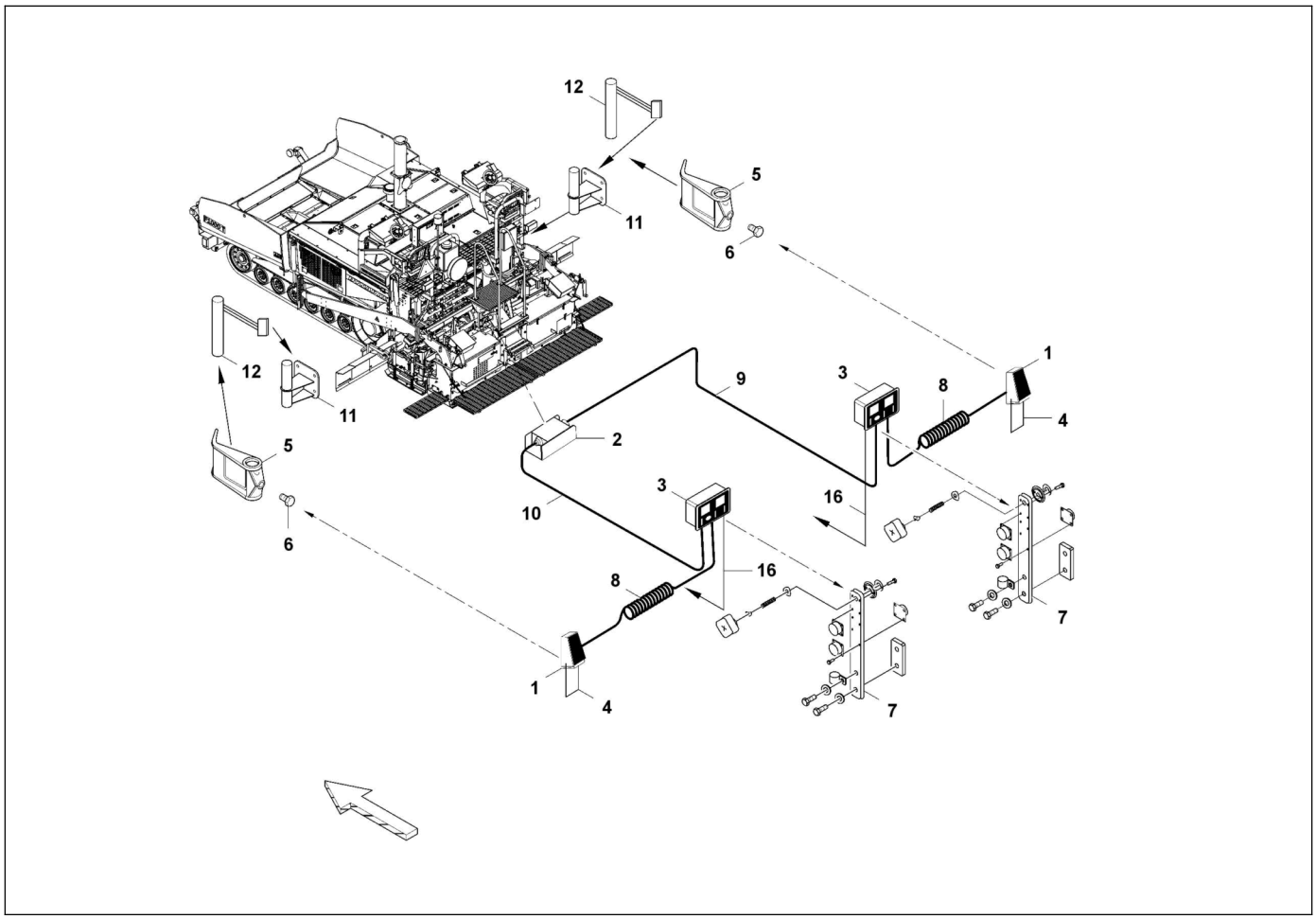

D717102501
Topcon leveling control

Item	Part Number	Quantity	Description
1	D717102502	2	Sonic tracker II
2	D717102503	1	Slope, dual port
3	D717102504	2	Box, controller single side base
4	D717102509	2	Temp baik w/sleeves
5	D717102510	2	Bracket, sonic tracker
6	D717102511	2	Kit, sonic tracker
7	4812222564	2	Controller bracket
8	D717102513	2	Coil cord 15ft, sonic tracker-controller
9	D717102514	1	Cable, slope system
10	D717102515	1	Cable, slope system
11	D717102516	2	Bracket, short, tom arm mount
12	D717102517	2	Bracket, l-arm long fin
13	D717102505	1	Operator manual, leveling controll
15	D717102507	1	Case
16	D717102508	2	Cable, controller paver

Please check Table of Contents for use of this assembly

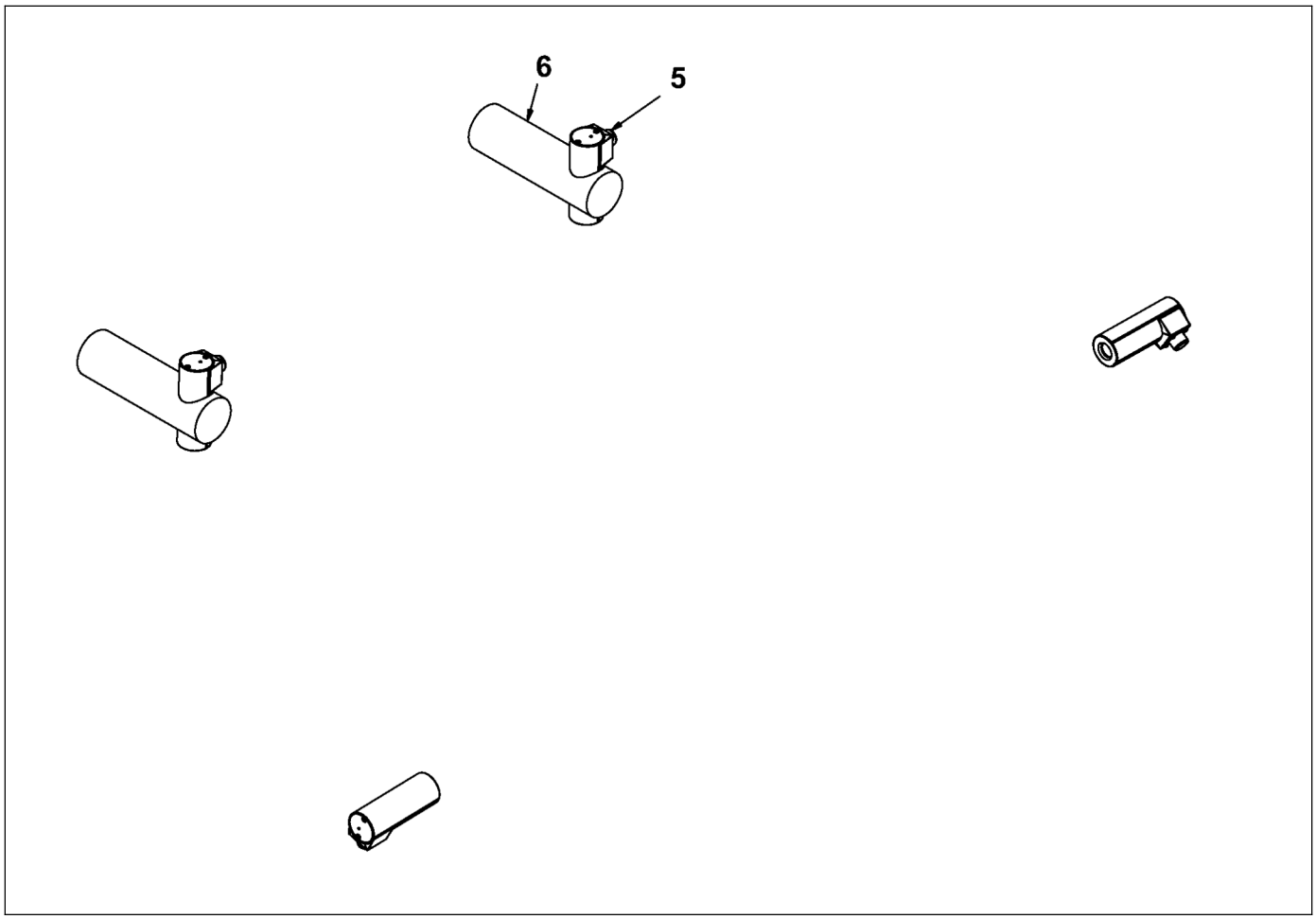

D717102000
Auger & conveyor controls, moba

Item	Part Number	Quantity	Description
1	D717102003	2	Coil cable, conveyor sensor
2	D717102004	4	Cable 15', controller-tractor
3	D717102012	2	Coil cable, auger sensor
5	D717102002	4	Sonic pwm sensor, feed system
6	D717102005	2	Bracket, sonic sensor

Please check Table of Contents for use of this assembly

D717901501
Non contacting SAS

Item	Part Number	Quantity	Description
1	D717901502	1	Supporting documents
2	D717901503	1	Case
3	D717901504	3	Temp bail with sleeves
4	D717901505	1	Sonic averaging
5	D717901506	1	Tow arm mounting bracket
6	D717102502	3	Sonic tracker II

Please check Table of Contents for use of this assembly

D717901505
Sonic averaging

Item	Part Number	Quantity	Description
1	D717952556	4	Hangar casting
2	D717952563	1	Installation manual
3	D717952570	1	Cable
4	D717952577	4	L bracket
5	D717952507	2	Pivot post
6	D717952514	4	Gusset
7	D717952521	2	Tube
8	D717952528	2	Stop collar
9	D717982535	1	SAS mount
13	D717952542	2	Smoothtrac label
14	D717952549	1	SAS beam kit

Please check Table of Contents for use of this assembly

D717952549
SAS beam kit

Item	Part Number	Quantity	Description
1	4812221747	1	Right center weld assembly
2	4812221748	1	Left center weld assembly
3	4812221749	1	Outside beam weld assembly
4	4812221750	1	Outside beam weld assembly

4812200264
MOBA-matic Leveling System

Item	Part Number	Quantity	Description
1	4812200265	2	Stop collar
2	4812200266	2	Coiled cable
3	4812200267	2	Coiled cable
4	4812200268	1	Left junction box
5	4812200269	1	Right junction box
6	4812200270	2	Sensor bracket
7	4812200271	2	Controller mounting assembly
8	4812200272	2	Junction box mounting
9	4812200273	2	Adjustable swing arm
10	4812200274	2	CLS3-II controller
11	4812200275	1	Case
12	4812200276	1	Manual
13	4812200277	4	Connection cable
14	4812200278	1	Digi-slope sensor
15	4812200279	1	Slope plate
16	4812200280	2	Sonic ski sensor
17	4812200281	2	Tow arm mount
18	4812200282	2	Pivot post

Please check Table of Contents for use of this assembly

4812200264
MOBA-matic Leveling System

Item	Part Number	Quantity	Description
19	4812200283	2	Stop collar

Please check Table of Contents for use of this assembly

D717952458
Screed disconnect kit

Item	Part Number	Quantity	Description
1	4812220098	4	Spacer, 1"
2	4812220161	8	Cap screw, 3/4"
3	D717800841	8	Lock nut, 3/4"
4	D717801072	16	Narrow washer, 0.75"
5	D717920534	2	Hose assembly, #95, #96, 06
6	D717920541	1	Hose assembly, #97, 04
7	D717920632	2	Hose assembly, #114, #115, 08
8	D717952465	1	Screed disconnect jumper

Please check Table of Contents for use of this assembly

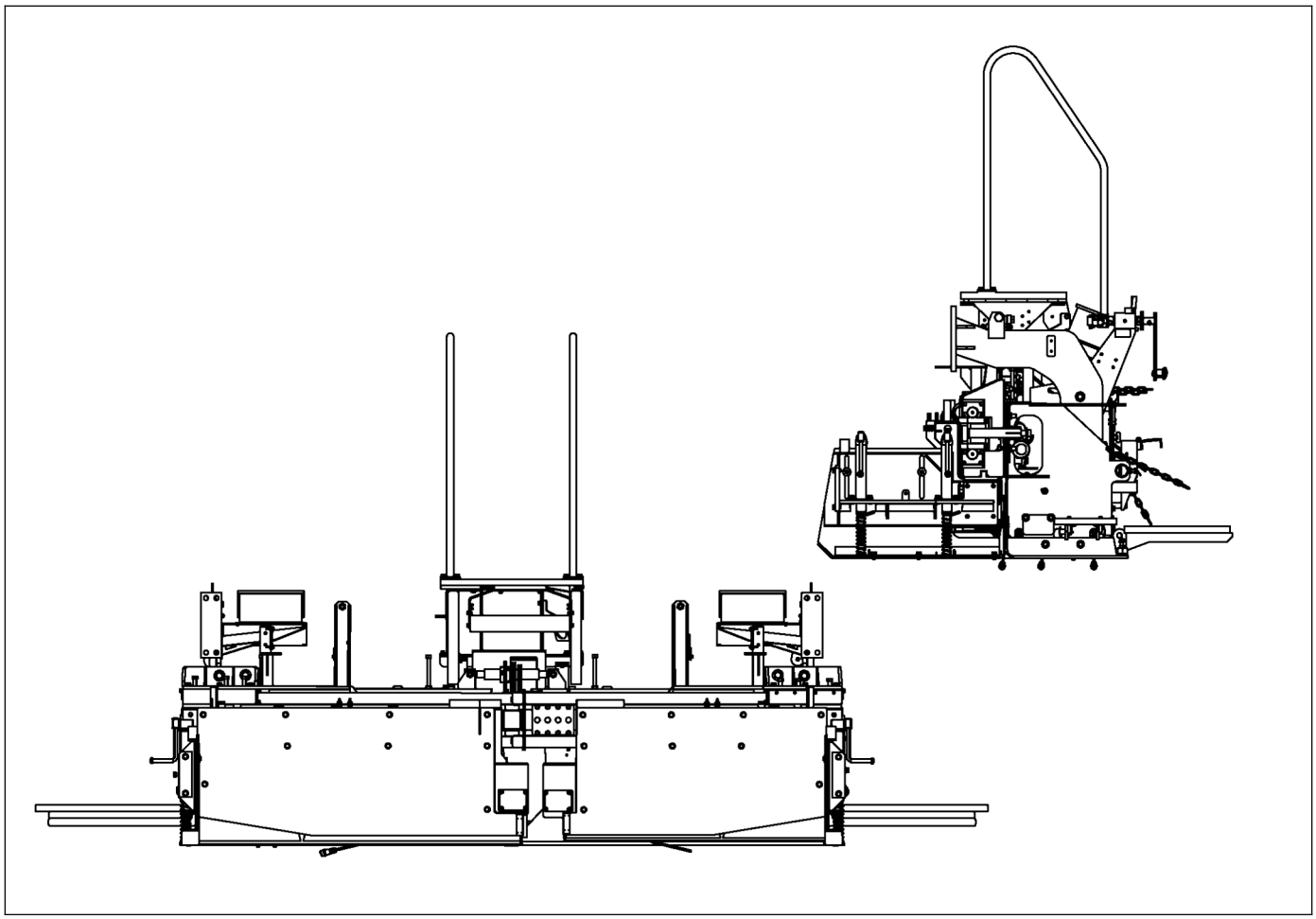

D626000000
Carlson screed

Item	Part Number	Quantity	Description
1	D626000009	2	Mount, Topcon
2	D717102013	4	Feeder controller
3	D717102014	4	Potentiometer
4	D717102015	1	Potentiometer knob
5	4812200155	1	EZIV 12" screed extension with heat, left
6	4812200156	1	EZIV 12" screed extension with heat, right
7	4812200157	1	EZIV 18" screed extension with heat, left
8	4812200158	1	EZIV 18" screed extension with heat, right
9	4812200159	1	EZIV 24" screed extension with heat, left
10	4812200160	1	EZIV 24" screed extension with heat, right
11	4812200161	1	EZIV wide width kit
12	4812200162	1	EZIV 6" cut off shoe, right
13	4812200163	1	EZIV 6" cut off shoe, left
14	4812200164	1	EZIV 6" cut off shoe extension
15	4812200165	1	EZIV counter-clockwise depth crank screw long
16	4812200166	1	EZIV clockwise depth crank screw long
17	4812200167	1	EZIV heated endgate kit
18	4812200168	1	EZIV safety endgate, right

Please check Table of Contents for use of this assembly

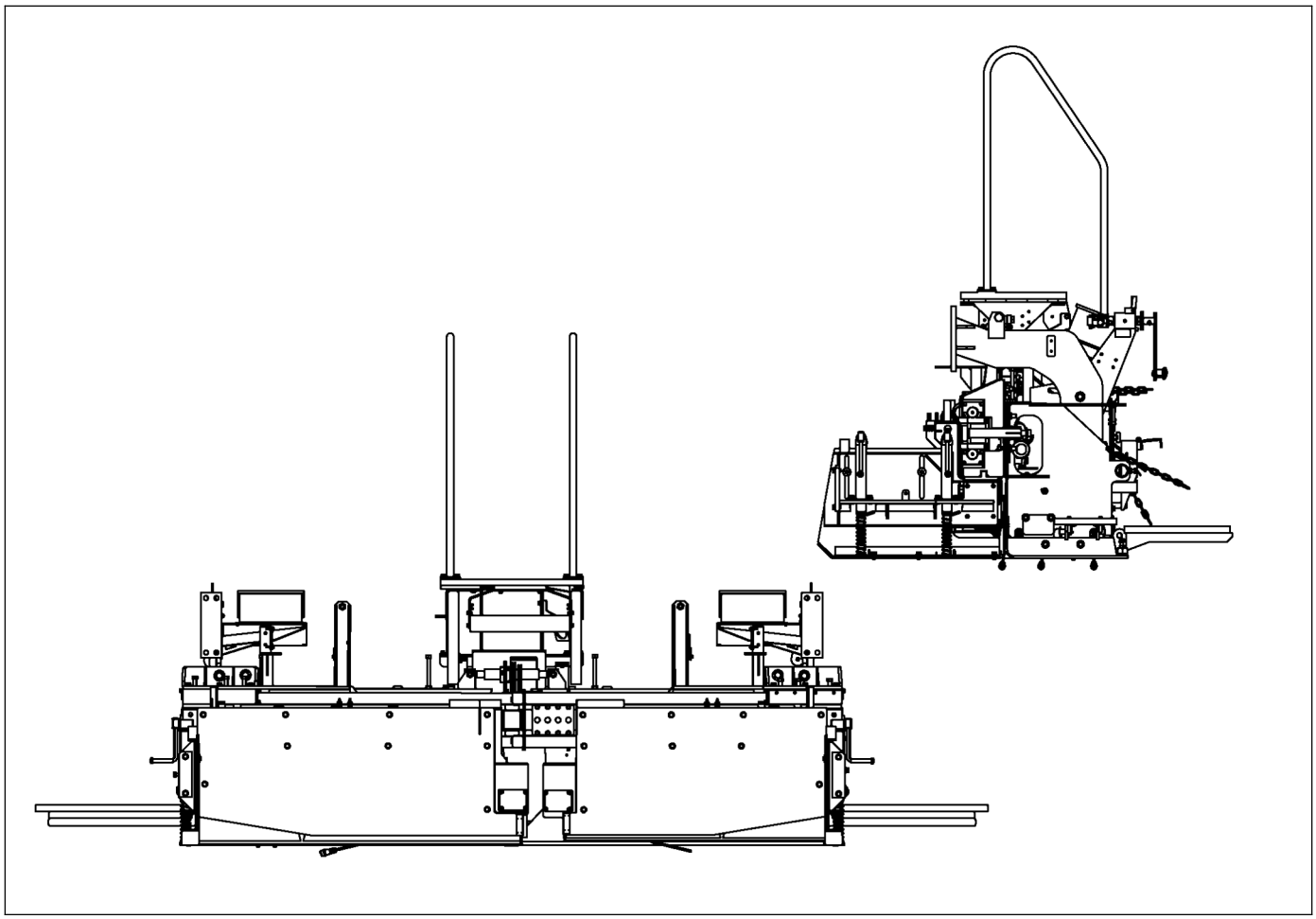

D626000000
Carlson screed

Item	Part Number	Quantity	Description
19	4812200169	1	EZIV safety endgate, left
20	4812200170	1	EZIV heat endgate safety kit
21	4812200171	1	EZR counter-clockwise depth crank, long, 106+
22	4812200172	1	EZR clockwise depth crank, long, 106+
23	4812200173	1	EZR counter-clock depth crank, long, 101-105
24	4812200174	1	EZR clockwise depth crank, long, 101-105
25	4812200175	1	EZR heated endgate kit
26	4812200176	1	EZR safety edge float, right
27	4812200177	1	EZR safety edge float with heat, right
28	4812200178	1	EZR safety edge complete, right
29	4812200179	1	EZR safety edge complete item
30	4812200180	1	EZR safety edge complete item
31	4812200181	1	EZR safety edge complete item
32	4812200182	1	EZR safety edge complete item
33	4812200183	1	EZR safety edge complete item
34	4812200184	1	EZR safety edge complete item
35	4812200185	1	EZR safety edge complete item
36	4812200186	1	EZR safety edge complete item

Please check Table of Contents for use of this assembly

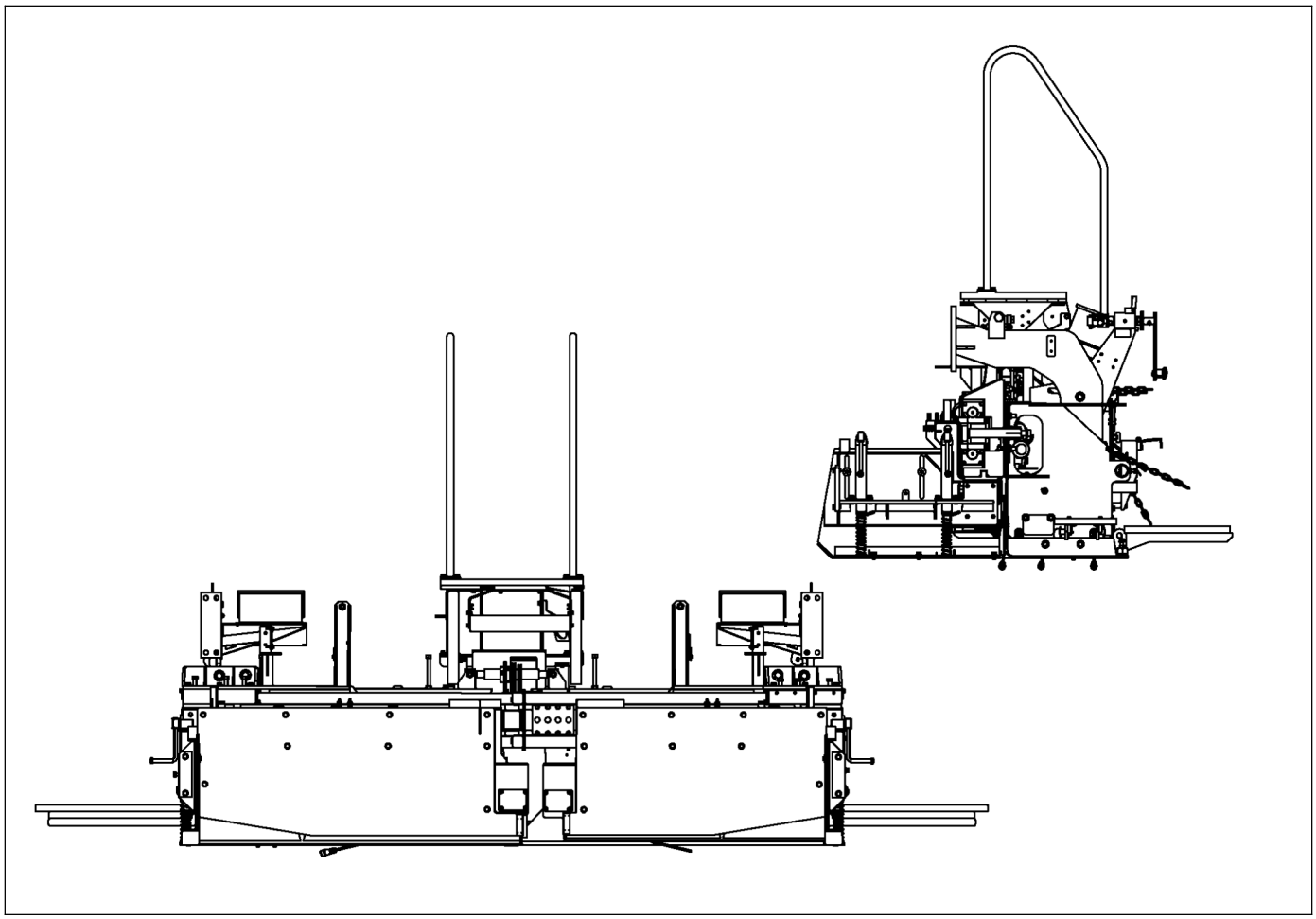

D626000000
Carlson screed

Item	Part Number	Quantity	Description
37	4812200187	1	EZR safety edge complete item
38	4812200188	1	EZR safety edge float, left
39	4812200189	1	EZR safety edge float with heat, left
40	4812200190	1	EZR safety edge complete, left
41	4812200191	1	EZR safety edge complete item
42	4812200294	1	Easy IV screed assembly
43	4812200296	1	EZR sceed assembly
	D717102501	1	Topcon leveling control
	D717102000	1	Auger & conveyor controls, moba
	D717901501	1	Non contacting SAS
	D717905500	1	Option, Balloon lights
	4812200264	1	MOBA-matic Leveling System
	D717952458	1	Screed disconnect kit
107	D717102001	4	Controller, feed system

Please check Table of Contents for use of this assembly

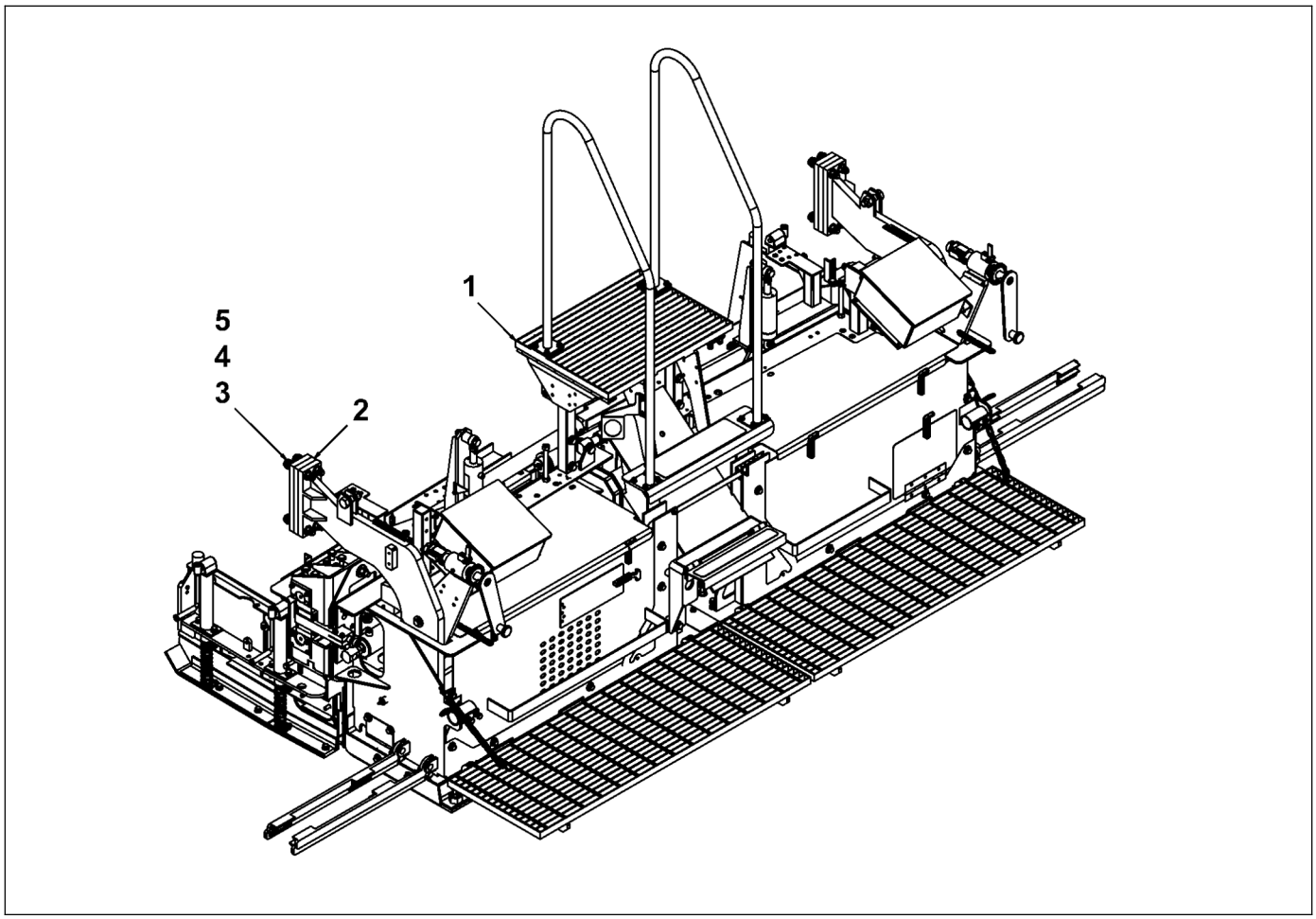

4812200294
Easy IV screed assembly

Item	Part Number	Quantity	Description
1	4812200293	1	Carslon EZ-IV screed assembly
2	4812220098	4	Spacer, 1"
3	4812220161	8	Cap screw, 3/4"
4	D717800841	8	Lock nut, 3/4"
5	D717801072	16	Narrow washer, 0.75"
6	D717920534	2	Hose assembly, #95, #96, 06
7	D717920541	1	Hose assembly, #97, 04
8	D717920632	2	Hose assembly, #114, #115, 08

Please check Table of Contents for use of this assembly

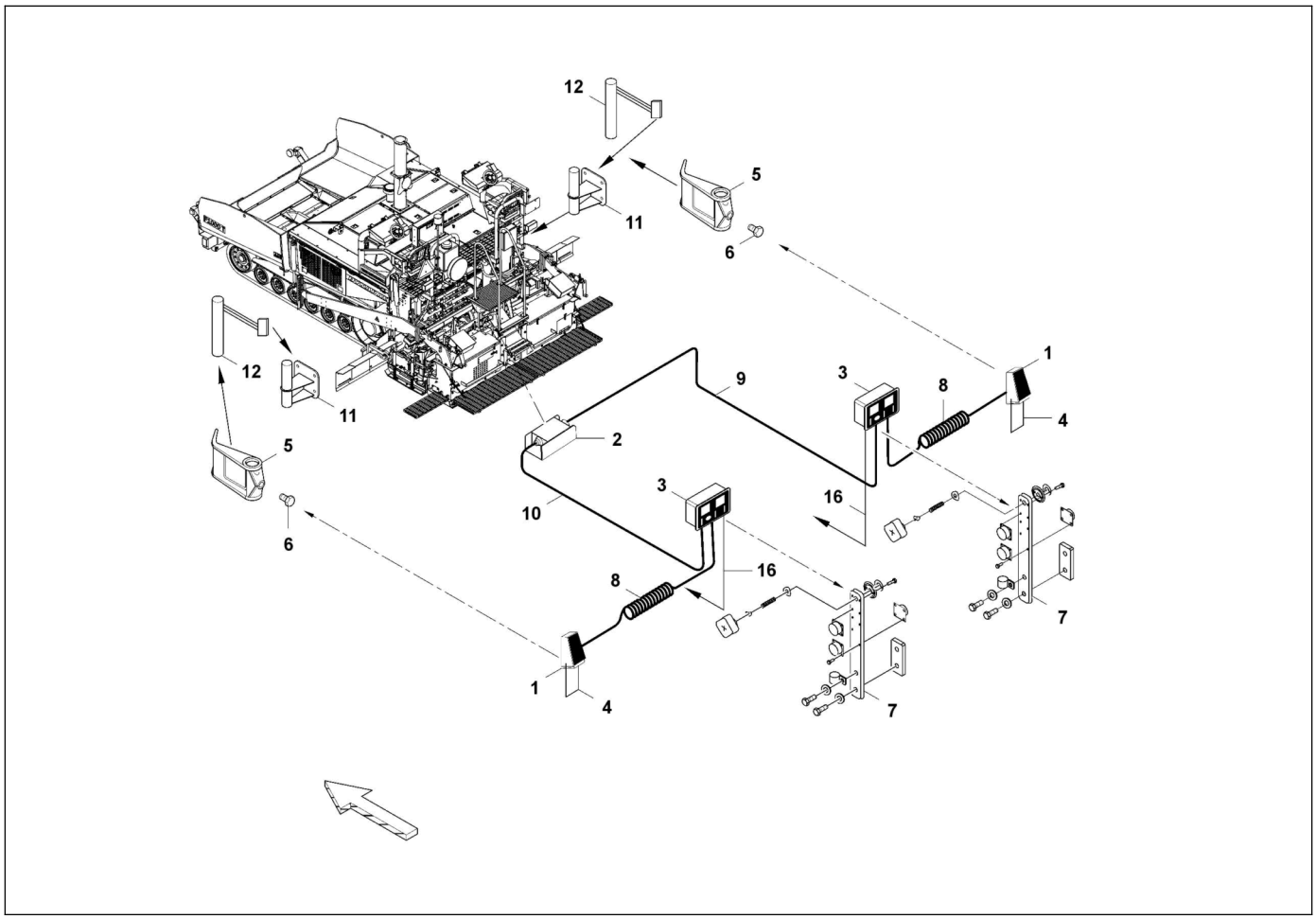

D717102501
Topcon leveling control

Item	Part Number	Quantity	Description
1	D717102502	2	Sonic tracker II
2	D717102503	1	Slope, dual port
3	D717102504	2	Box, controller single side base
4	D717102509	2	Temp baik w/sleeves
5	D717102510	2	Bracket, sonic tracker
6	D717102511	2	Kit, sonic tracker
7	4812222564	2	Controller bracket
8	D717102513	2	Coil cord 15ft, sonic tracker-controller
9	D717102514	1	Cable, slope system
10	D717102515	1	Cable, slope system
11	D717102516	2	Bracket, short, tom arm mount
12	D717102517	2	Bracket, l-arm long fin
13	D717102505	1	Operator manual, leveling controll
15	D717102507	1	Case
16	D717102508	2	Cable, controller paver

Please check Table of Contents for use of this assembly

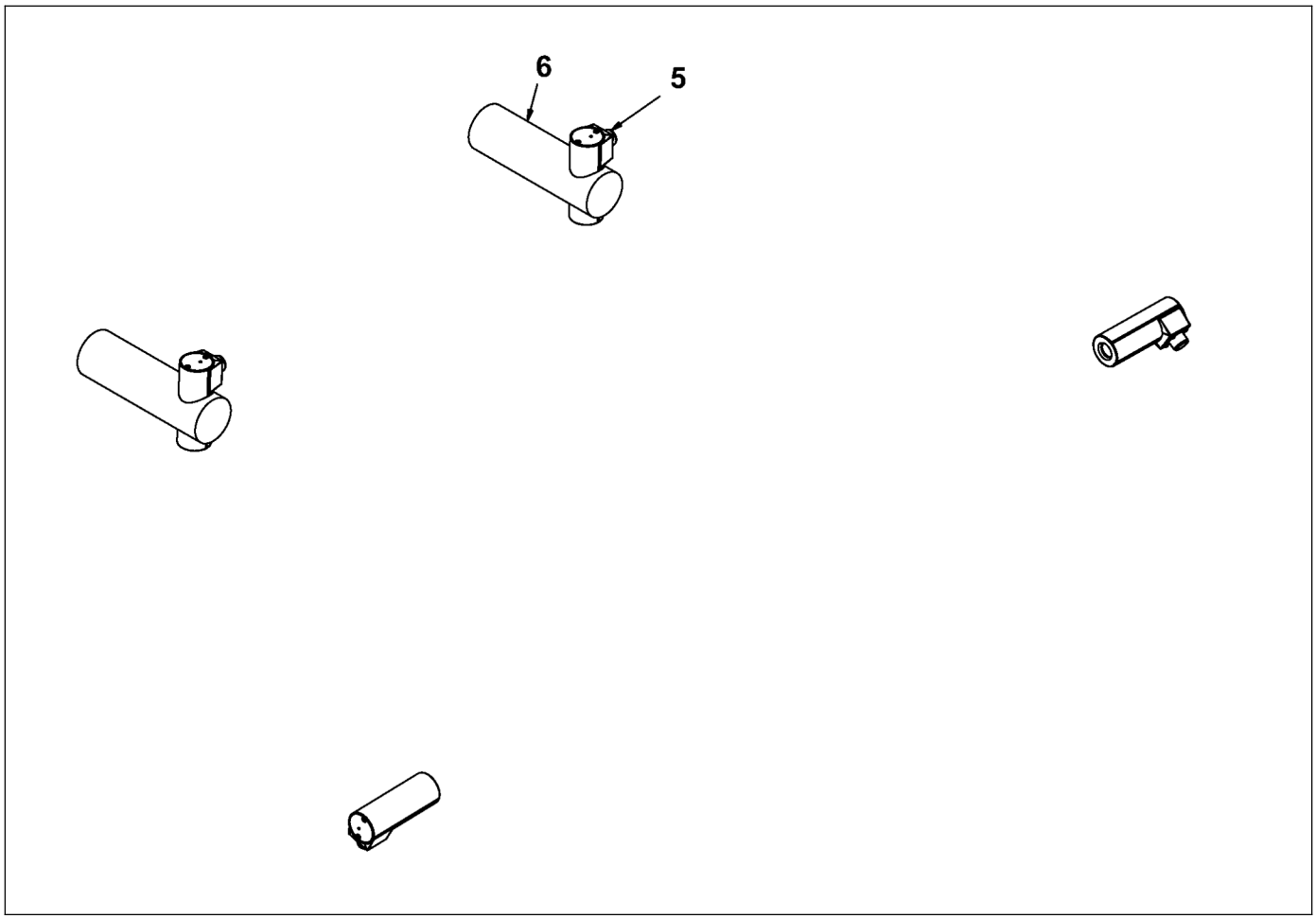

D717102000
Auger & conveyor controls, moba

Item	Part Number	Quantity	Description
1	D717102003	2	Coil cable, conveyor sensor
2	D717102004	4	Cable 15', controller-tractor
3	D717102012	2	Coil cable, auger sensor
5	D717102002	4	Sonic pwm sensor, feed system
6	D717102005	2	Bracket, sonic sensor

D717901501
Non contacting SAS

Item	Part Number	Quantity	Description
1	D717901502	1	Supporting documents
2	D717901503	1	Case
3	D717901504	3	Temp bail with sleeves
4	D717901505	1	Sonic averaging
5	D717901506	1	Tow arm mounting bracket
6	D717102502	3	Sonic tracker II

Please check Table of Contents for use of this assembly

D717901505
Sonic averaging

Item	Part Number	Quantity	Description
1	D717952556	4	Hangar casting
2	D717952563	1	Installation manual
3	D717952570	1	Cable
4	D717952577	4	L bracket
5	D717952507	2	Pivot post
6	D717952514	4	Gusset
7	D717952521	2	Tube
8	D717952528	2	Stop collar
9	D717982535	1	SAS mount
13	D717952542	2	Smoothtrac label
14	D717952549	1	SAS beam kit

Please check Table of Contents for use of this assembly

D717952549
SAS beam kit

Item	Part Number	Quantity	Description
1	4812221747	1	Right center weld assembly
2	4812221748	1	Left center weld assembly
3	4812221749	1	Outside beam weld assembly
4	4812221750	1	Outside beam weld assembly

Please check Table of Contents for use of this assembly

4812200264
MOBA-matic Leveling System

Item	Part Number	Quantity	Description
1	4812200265	2	Stop collar
2	4812200266	2	Coiled cable
3	4812200267	2	Coiled cable
4	4812200268	1	Left junction box
5	4812200269	1	Right junction box
6	4812200270	2	Sensor bracket
7	4812200271	2	Controller mounting assembly
8	4812200272	2	Junction box mounting
9	4812200273	2	Adjustable swing arm
10	4812200274	2	CLS3-II controller
11	4812200275	1	Case
12	4812200276	1	Manual
13	4812200277	4	Connection cable
14	4812200278	1	Digi-slope sensor
15	4812200279	1	Slope plate
16	4812200280	2	Sonic ski sensor
17	4812200281	2	Tow arm mount
18	4812200282	2	Pivot post

Please check Table of Contents for use of this assembly

4812200264
MOBA-matic Leveling System

Item	Part Number	Quantity	Description
19	4812200283	2	Stop collar

Please check Table of Contents for use of this assembly

D717952458
Screed disconnect kit

Item	Part Number	Quantity	Description
1	4812220098	4	Spacer, 1"
2	4812220161	8	Cap screw, 3/4"
3	D717800841	8	Lock nut, 3/4"
4	D717801072	16	Narrow washer, 0.75"
5	D717920534	2	Hose assembly, #95, #96, 06
6	D717920541	1	Hose assembly, #97, 04
7	D717920632	2	Hose assembly, #114, #115, 08
8	D717952465	1	Screed disconnect jumper

Please check Table of Contents for use of this assembly

AFTERMARKET KIT
Aftermarket Kits

Item	Part Number	Quantity	Description
1	D717951926	1	Service tool
2	D717951989	1	Emergency hose kit
3	D717952304	1	100 hr start-up kit
4	D717952311	1	500 hr maintenance kit
5	D717952318	1	1000 hr maintenance kit
6	D716410031	1	F1000W manual kit
7	D717410031	1	F1000T manual kit

Please check Table of Contents for use of this assembly

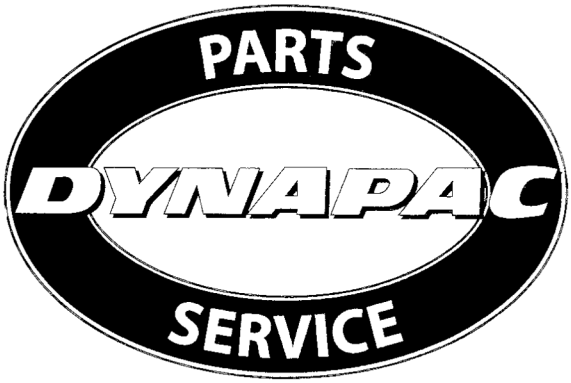

D717951926
Service tool

Item	Part Number	Quantity	Description
1	4812220468	1	Data link cable
2	D717102006	2	MOBA programmer

D717951989
Emergency hose kit

Item	Part Number	Quantity	Description
1	4812200054	2	Adapter, 16-16
2	D716083536	1	Hose assembly, fuel tank
3	D716920400	1	Hose assembly, #257, 24
4	D717085055	1	Hose assembly, #105, 32
5	D717190006	1	Hose assembly
6	D717920646	1	Hose assembly, #124, 20
7	D717951996	1	Hose, 04
8	D717952003	2	Adapter, 04
9	D717952010	2	Adapter, 04
10	D717952017	2	Adapter, 04
11	D717952024	2	Adapter, 04
12	D717952031	1	Hose, 06
13	D717952038	1	Hose, 06
14	D717952045	2	Adapter, 06
15	D717952052	2	Adapter, 06
16	D717952059	2	Adapter, 12
17	D717952066	1	Hose, 08
18	D717952073	2	Adapter, 08

Please check Table of Contents for use of this assembly

D717951989
Emergency hose kit

Item	Part Number	Quantity	Description
19	D717952080	2	Adapter, 08
20	D717952087	2	Adapter, 08
21	D717952094	1	Hose, 10
22	D717952101	1	Hose, 10
23	D717952108	2	Adapter, 10
24	D717952115	2	Adapter, 10
25	D717952122	2	Adapter, 10
26	D717952129	1	Hose, 12
27	D717952136	1	Hose, 12
28	D717952143	1	Hose, 12
29	D717952150	2	Adapter, 12
30	D717952157	2	Adapter, 12
31	D717952164	2	Adapter, 12
32	D717952171	2	Adapter, 12
33	D717952178	1	Hose, 16
34	D717952185	1	Hose, 16
35	D717952192	1	Hose, 16
36	D717952199	1	Adapter, 16

Please check Table of Contents for use of this assembly

D717951989
Emergency hose kit

Item	Part Number	Quantity	Description
37	D717952206	2	Adapter, 16
38	D717952213	2	Adapter, 16
39	D717952220	2	Adapter, 16
40	D717952227	2	Adapter, 16
41	D717952234	2	Adapter, 16
42	D717952241	1	Adapter, 32
43	D717952248	1	Fuel hose, 3/8"
44	D717952255	1	Wrench set
45	D717952269	1	Large bin
46	D717952276	1	Small bin
47	D717952283	1	First-aid kit
48	D717952290	1	O-ring kit
49	D717952297	1	Split-flange o-ring kit
50	D717952367	1	Hose kit case
51	D717952472	1	Emergency kit decal
52	D717952479	1	Hydraulic wrench
53	D717952486	1	Tote, 4x6
54	D717952493	1	Tote, 16x10

Please check Table of Contents for use of this assembly

D717951989
Emergency hose kit

Item	Part Number	Quantity	Description
55	D717952591	2	Cap-4
56	D717952598	2	Cap-6
57	D717952605	2	Cap-8
58	D717952612	2	Cap-10
59	D717952619	2	Cap-12
60	D717952626	2	Cap-16
61	D717952633	2	Cap-24
62	D717952640	2	Cap-32
63	D717952647	2	Plug-4
64	D717952654	2	Plug-6
65	D717952661	2	Plug-8
66	D717952668	2	Plug-10
67	D717952675	2	Plug-12
68	D717952682	2	Plug-16
69	D717952689	2	Plug-24
70	D717952696	2	Plug-32

Please check Table of Contents for use of this assembly

D717952304
100 hr start-up kit

Item	Part Number	Quantity	Description
1	D717950477	1	Replacement filter
2	D717950673	1	Filter, fuel/separator
3	D717950736	1	Kit, seal
4	D717951135	1	Kit, seal
5	D717951149	1	Element, filter
6	D717951975	1	Filter, fuel

Please check Table of Contents for use of this assembly

D717952311
500 hr maintenance kit

Item	Part Number	Quantity	Description
1	D717950659	1	Filter, primary air
2	D717950666	1	Filter, safety air
3	D717950673	1	Filter, fuel/separator
4	D717950694	1	Filter, oil
5	D717951975	1	Filter, fuel

D717952318
1000 hr maintenance kit

Item	Part Number	Quantity	Description
1	D717950190	1	Belt, v-ribbed
2	D717950477	1	Replacement filter
3	D717950659	1	Filter, primary air
4	D717950666	1	Filter, safety air
5	D717950673	1	Filter, fuel/separator
6	D717950694	1	Filter, oil
7	D717950736	1	Kit, seal
8	D717951135	1	Kit, seal
9	D717951149	1	Element, filter
10	D717951975	1	Filter, fuel

Please check Table of Contents for use of this assembly

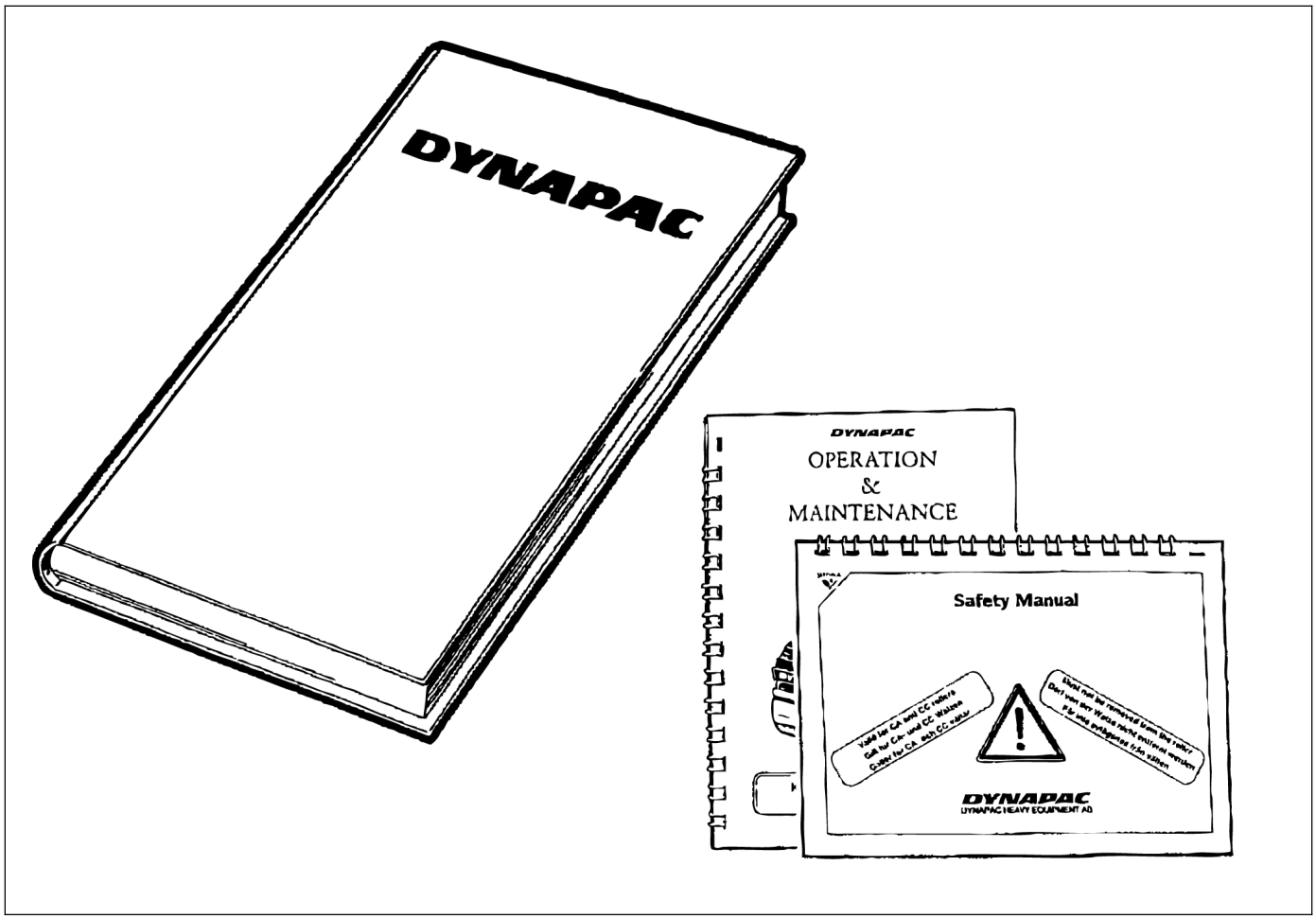

D716410031
F1000W manual kit

Item	Part Number	Quantity	Description
1	4812200126	1	Parts List, A5
2	D717410045	1	Operation and Maintenance Manual, A5
3	D717410059	1	Safety Manual, A5
4	D717410066	1	Parts List, Letter
5	D717410073	1	Cummins CD and Parts Manual, Letter
6	D717410080	1	Cummins Operator and Maint Manual, Letter
7	D717410087	1	Carlson Screed EZIV 10' Manual, Letter
8	D717410115	1	Leveling System Ops Man, Topcon / Moba, A5
9	D717410129	1	Operation and Parts Manual Set, CD

Please check Table of Contents for use of this assembly

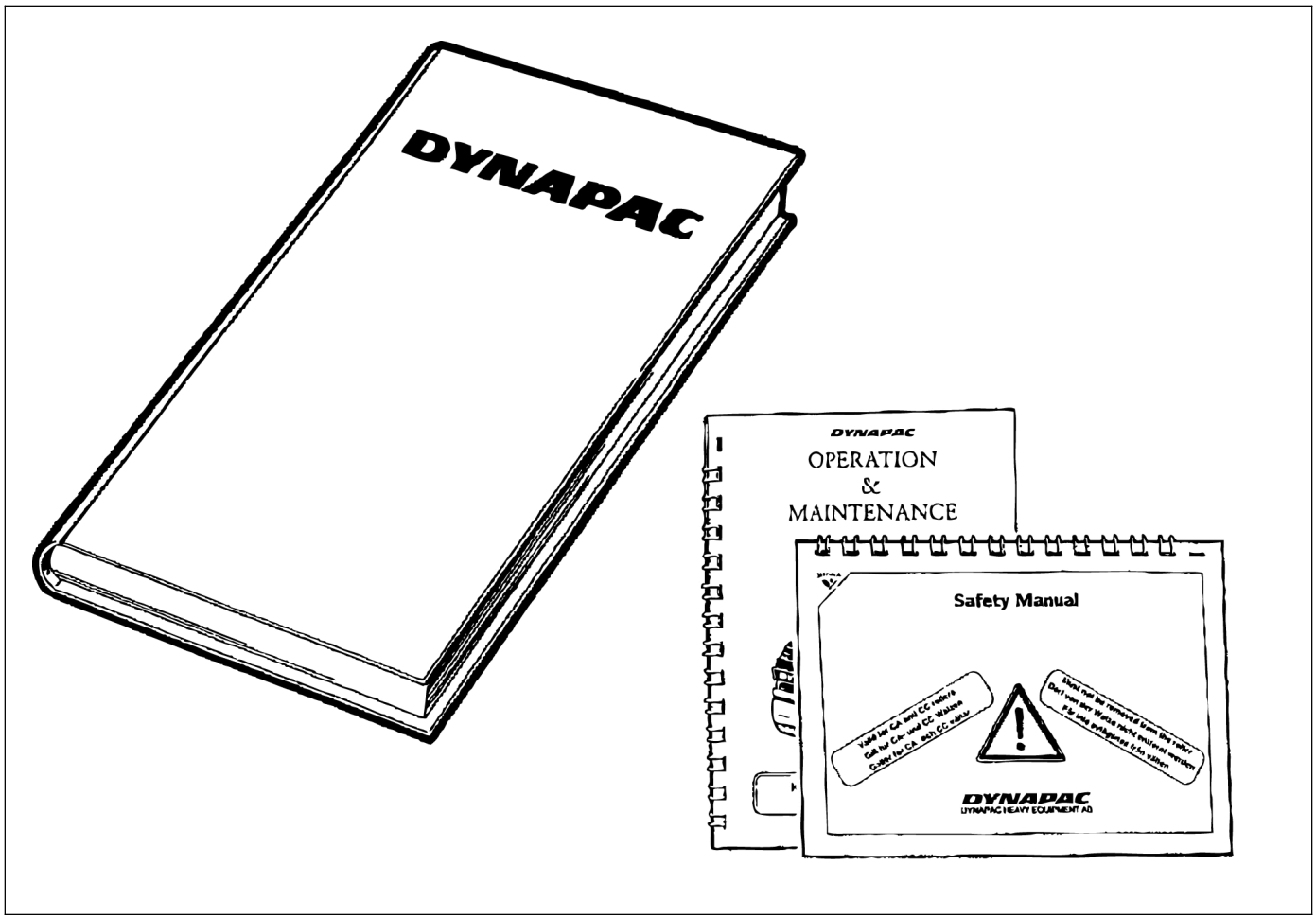

D717410031
F1000T manual kit

Item	Part Number	Quantity	Description
1	4812200125	1	Parts List, A5
2	D717410045	1	Operation and Maintenance Manual, A5
3	D717410059	1	Safety Manual, A5
4	D717410066	1	Parts List, Letter
5	D717410073	1	Cummins CD and Parts Manual, Letter
6	D717410080	1	Cummins Operator and Maint Manual, Letter
7	D717410087	1	Carlson Screed EZIV 10' Manual, Letter
8	D717410115	1	Leveling System Ops Man, Topcon / Moba, A5
9	D717410129	1	Operation and Parts Manual Set, CD

Please check Table of Contents for use of this assembly

NUMERICAL INDEX

Part No.	Description	Page
4700116037	Bearing	216,240
4700281898	Decal	202
4700338304	Adapter	5
4700343775	Wire	101,102,109,110
4700357587	Decal, lift point	201
4700358881	Lock	199
4700382751	Decal	201
4700500012	Capscrew, M6	184
4700500040	Cap screw, M6	216,240
4700500194	Cap screw, M12	219,243
4700508019	Cap screw, M8	217,241
4700586003	Nut, M8	101,102,109,110
4700600011	Flat washer, M16	211,235
4700792568	Nameplate	202
4700903422	Decal, crush area	201
4700903423	Decal, safety	201
4700903424	Decal, safety	201
4700903459	Decal, safety	201
4700904229	Washer, #8	101,102,109,110
4700904639	Washer, M6	184
4700904835	Decal	202
4700921050	Clamp	171
4700928847	Nut	211,227,228,235,251,252
4700940451	Starter key	199
4700991658	Decal	201
4749900025	Lock washer	211,227,228,235,251,252
4749900032	Lock washer	219,243
4749900080	Lock washer	217,241
4749900455	Screw	211,235
4749900776	Screw	212,236
4749901061	Lock washer	219,243
4812115484	US flex decal	202
4812200007	Display, with program	180
4812200009	Lock pin	31,34
4812200051	Cap screw, 1/2"	14
4812200052	Nut, 1/2"	14
4812200054	Adapter, 16-16	53,66,291
4812200063	Hose kit, auger	53,55
4812200065	Hose kit, conveyor	53,56
4812200067	Hose kit, lube	53,57
4812200068	Hose kit, miscellaneous	53,58
4812200069	Hose kit, propel	53,59,60
4812200071	Hose kit, vibration	53,61
4812200072	Hose kit, work	53,62
4812200073	Hose kit, work	53,63,64
4812200074	Adapter, 12-12	53,171
4812200075	Elbow, 12-16	53
4812200079	Elbow, 10-12	53
4812200080	Adapter, 10-10	53
4812200081	Elbow, 06-04	53,208,232
4812200082	Elbow, 16-12	53
4812200084	Adapter, 10-18	53
4812200085	Coupling, splined	184
4812200086	Coupling, spider	184
4812200087	Hose clamp	140
4812200092	Hose kit, generator system	53
4812200101	Adapter, 10-18	53
4812200102	Plug, square	170
4812200113	Elbow, 08-08	53
4812200114	Adapter, 04-12	54
4812200116	Elbow, 16-16	171
4812200117	Adapter, 16-16	171
4812200118	Elbow, 16-16	170
4812200120	Plug, 1/4"	124
4812200124	Engine assembly	117,127
4812200125	Parts List, A5	299
4812200126	Parts List, A5	298

Please check Table of Contents for use of a part number

NUMERICAL INDEX

Part No.	Description	Page
4812200127	Run tee, 08-08-08	54
4812200128	Adapter, 06-06	54
4812200129	Adapter, 06-04	54
4812200130	Loop flushing kit	208,232
4812200149	Ball valve mount bracket	5
4812200155	EZIV 12" screed extension with heat, left	264,277
4812200156	EZIV 12" screed extension with heat, right	264,277
4812200157	EZIV 18" screed extension with heat, left	264,277
4812200158	EZIV 18" screed extension with heat, right	264,277
4812200159	EZIV 24" screed extension with heat, left	264,277
4812200160	EZIV 24" screed extension with heat, right	264,277
4812200161	EZIV wide width kit	264,277
4812200162	EZIV 6" cut off shoe, right	264,277
4812200163	EZIV 6" cut off shoe, left	264,277
4812200164	EZIV 6" cut off shoe extension	264,277
4812200165	EZIV counter-clockwise depth crank screw long	264,277
4812200166	EZIV clockwise depth crank screw long	264,277
4812200167	EZIV heated endgate kit	264,277
4812200168	EZIV safety endgate, right	264,277
4812200169	EZIV safety endgate, left	264,277
4812200170	EZIV heat endgate safety kit	265,278
4812200171	EZR counter-clockwise depth crank, long, 106+	265,278
4812200172	EZR clockwise depth crank, long, 106+	265,278
4812200173	EZR counter-clock depth crank, long, 101-105	265,278
4812200174	EZR clockwise depth crank, long, 101-105	265,278
4812200175	EZR heated endgate kit	265,278
4812200176	EZR safety edge float, right	265,278
4812200177	EZR safety edge float with heat, right	265,278
4812200178	EZR safety edge complete, right	265,278
4812200179	EZR safety edge complete item	265,278
4812200180	EZR safety edge complete item	265,278
4812200181	EZR safety edge complete item	265,278
4812200182	EZR safety edge complete item	265,278
4812200183	EZR safety edge complete item	265,278
4812200184	EZR safety edge complete item	265,278
4812200185	EZR safety edge complete item	265,278
4812200186	EZR safety edge complete item	265,278
4812200187	EZR safety edge complete item	265,278
4812200188	EZR safety edge float, left	265,278
4812200189	EZR safety edge float with heat, left	266,279
4812200190	EZR safety edge complete, left	266,279
4812200191	EZR safety edge complete item	266,279
4812200194	Adapter, 16-12	208,232
4812200195	Clamping bar	207,231
4812200196	Umbrella	103,111
4812200214	Lower bearing stop	101,102,109,110
4812200215	Hood seal backing plate	100
4812200216	Auger grease hose	222,246
4812200217	Auger lubrication	208,222,232,246
4812200218	Spacer	22
4812200219	Slope beam mount	23
4812200221	Slope beam	23
4812200222	Slide	23
4812200224	Adapter, male-male	222,246
4812200226	Elbow	222,246
4812200227	Conduit hub	13
4812200228	Liquid-tight fitting	13
4812200229	Conduit hub	184
4812200230	Elbow, 1"	184
4812200233	Adapter, bulkhead	222,246
4812200234	Hood door seal, left	100
4812200235	Hood door seal, right	100
4812200236	Platform walkway seal	100
4812200254	Wiper backing plate, long	40,42
4812200255	Wiper, long	40,42
4812200262	Roller spacer	21
4812200263	Roller, screed arm	21

Please check Table of Contents for use of a part number

NUMERICAL INDEX

Part No.	Description	Page
4812200264	MOBA-matic Leveling System	266,273,274,279,286,287
4812200265	Stop collar	273,286
4812200266	Coiled cable	273,286
4812200267	Coiled cable	273,286
4812200268	Left junction box	273,286
4812200269	Right junction box	273,286
4812200270	Sensor bracket	273,286
4812200271	Controller mounting assembly	273,286
4812200272	Junction box mounting	273,286
4812200273	Adjustable swing arm	273,286
4812200274	CLS3-II controller	273,286
4812200275	Case	273,286
4812200276	Manual	273,286
4812200277	Connection cable	273,286
4812200278	Digi-slope sensor	273,286
4812200279	Slope plate	273,286
4812200280	Sonic ski sensor	273,286
4812200281	Tow arm mount	273,286
4812200282	Pivot post	273,286
4812200283	Stop collar	273,286
4812200287	Hood seal backing plate	100
4812200293	Carslon EZ-IV screed assembly	267,280
4812200294	Easy IV screed assembly	266,267,279,280
4812200296	EZR sceed assembly	266,279
4812200297	Hose assembly, #134, 10	58,119
4812200298	Hose assembly, #133, 12	58,136
4812200299	Hose assembly, #132, 10	58,140
4812200300	Hose assembly, #37, 08	62
4812200301	Hose assembly, #38, 06	62
4812200302	Hose assembly, #40, 06	62
4812200303	Wiper backing plate, short	40,42
4812200304	Wiper, short	40,42
4812200307	Hydraulic oil filters bracket	4
4812200311	Roading lights weldment, left	255
4812200312	Roading lights weldment, right	255
4812200313	Conduit, 1/2"	256
4812200314	Roading lights harness	256
4812200315	Conduit, 1/2"	256
4812200317	Valve handle	261
4812200318	Coupling	261
4812200319	Air cleaner mounting band	129
4812200323	Screw, 3/8"	47
4812220077	Reflector strip	202
4812220078	Reflector strip	202
4812220079	Reflector strip	202
4812220080	Reflector strip	202
4812220081	Reflector strip	202
4812220082	Reflector strip	202
4812220088	Decal, warning	198
4812220092	Decal, seat belt	202
4812220093	Decal, hand crush	202
4812220095	Reflector strip	202
4812220097	Decal, high voltage	202
4812220098	Spacer, 1"	263,267,275,280,288
4812220117	Hose clamp, 2 3/8"	123
4812220118	Hose clamp, 3 1/2"	122
4812220143	Elbow, 12	136
4812220161	Cap screw, 3/4"	263,267,275,280,288
4812220181	Check valve	46
4812220182	Ball valve	46
4812220191	Plug, 1/4"	136
4812220193	Clamp assembly, case drain	119
4812220245	Hex flange	134
4812220250	Washer	124
4812220468	Data link cable	290
4812220568	Plate, screed support	12
4812220697	Plate, cover console	12

Please check Table of Contents for use of a part number

NUMERICAL INDEX

Part No.	Description	Page
4812220714	Rail mount clamp	46
4812220716	Front hopper skirt	44
4812220717	Skirt, hopper sides	40,42,44
4812220748	Filter, high-pressure	47
4812220843	Block, grease main frame	12
4812220889	Elbow, 16-20	47
4812220890	Elbow, 16-20	47
4812221048	Hose assembly	47,58
4812221068	Grease line, 4	13,58
4812221095	Run tee, 08-08-08	66
4812221096	Elbow, 20-12-90	47
4812221104	Front work function	47
4812221105	Rear work function	47,66
4812221106	Vibration valve	47
4812221108	HIC assembly	47
4812221160	Push roller crosshead, 10'	17
4812221161	Crosshead	17
4812221201	O-ring	136
4812221332	Latch plate	113
4812221333	Rubber door latch	113
4812221348	Adapter, M10-10	140
4812221372	Bulk head	5
4812221374	Grease line	13,58
4812221388	Door latch plunger	113
4812221389	Door latch socket	113
4812221502	Height gauge, right	208,232
4812221505	Height gauge, left	208,232
4812221507	Test port	47
4812221537	Breather vent	171
4812221543	Air vent hose	171
4812221548	Adapter, 2"-3/4"	171
4812221559	Air vent hose	58,171
4812221566	Hopper skirt	41
4812221567	Hopper skirt	43
4812221580	Rubber pad	21
4812221581	Screed replacement plug	174
4812221628	Hand rail, right	115
4812221629	Hand rail, left	115
4812221633	Hand rail	115
4812221652	Adapter, 1/4"-1/8"	13
4812221656	P clamp	47
4812221681	Adapter, 04-02	13
4812221747	Right center weld assembly	272,285
4812221748	Left center weld assembly	272,285
4812221749	Outside beam weld assembly	272,285
4812221750	Outside beam weld assembly	272,285
4812222048	Plate, door stop	112
4812222078	Door latch key	199
4812222082	Key replacement kit	199
4812222124	Swing arm spacer	101,102,109,110
4812222126	Spacer holder	101,102,109,110
4812222127	Breather holder spacer	171
4812222233	Screw, 3/8"	23
4812222251	Muffller, hood mount, top	130
4812222564	Controller bracket	268,281
4812222578	Hex screw, 10	191
4812222579	Hex lock nut, 10	191
4812222607	P clamp	16
4812222611	Chain mount	16
4812222647	Pin weldment	47
4812222657	Screw, 5/16"	47
4812222659	Wide-width paving kit	229,253
4812222662	Mounting components kit	229,253
4812222674	Extension support, left	226,230,250,254
4812222676	Extension support, right	226,230,250,254
4812250003	Seat	101,102,109,110
AFTERMARKET KIT	Aftermarket Kits	1,289

Please check Table of Contents for use of a part number

NUMERICAL INDEX

Part No.	Description	Page
D626000000	Carlson screed	1,263,264,265,266,277,278 279
D626000001	Screed sensor	1,263
D626000009	Mount, Topcon	264,277
D716083536	Hose assembly, fuel tank	291
D716410031	F1000W manual kit	289,298
D716920400	Hose assembly, #257, 24	291
D717000000	F1000T Tracked Paver, Tier 3, 10 FT	1
D717010000	Frame	1,3,4,5
D717010001	Center floor support	3
D717010004	Plate, center console	4
D717010005	Hex bolt, 3/4"	3
D717010006	Plate	3
D717010012	Washer, spash guard fender	4
D717010013	Plate	4
D717010014	Edge Trim Gusset Seal	5
D717010017	Fume screen	5
D717010500	Frame, main	3,7,8,9,10,11,12
D717010502	Rear wall	8
D717010509	Screed anchor	8
D717010510	Auger lift cylinder anchor	8
D717010512	Side wall	9
D717010515	Insert	9
D717010517	Threaded insert	9
D717010518	Threaded insert	9
D717010521	Hopper lift cylinder mount	8
D717010522	Front wall	9
D717010523	Tow arm cylinder mount	9
D717010529	Bumper	8
D717010530	Frame channel bar	9
D717010534	Frame channel	7
D717010537	Tunnel deck plate	9
D717010538	Lower slide support	8
D717010539	Conveyor mount plate	8
D717010540	Front conveyor plate	8
D717010541	Upper support	9
D717010542	Support bar	7
D717010543	Bar	7
D717010544	Bar	7
D717010545	Threaded insert, 3/4"	9
D717010548	Crossmember	7
D717010549	Support	7
D717010550	Crossmember	7
D717010552	Drive assembly mount	7
D717010553	Drive assembly mount	7
D717010554	Console support tube	7
D717010555	Spacer	8
D717010563	Block	7
D717010565	Plate	7
D717010566	Gusset	7
D717010567	Mounting plate	8
D717010569	Spacer plate	9
D717010571	Cover, generator access hole	4
D717010573	Door lip	8
D717010574	Chain slide mount	8
D717010575	Plate, conveyor wear	7
D717010576	Plate, conveyor wear	7
D717010577	Front lift lug	10
D717010578	Screed lift cylinder anchor	9
D717010579	Hood support bar	7
D717010580	Plate	7
D717010584	Crossmember	7
D717010585	Conveyor bearing clamp	9
D717010586	Front wall gusset	9
D717010587	Door leaf	7
D717010588	Hood support bar	8
D717010589	Hood support angle	8

Please check Table of Contents for use of a part number

NUMERICAL INDEX

Part No.	Description	Page
D717010590	Conveyor tension bracket	8
D717010592	Front adjuster plate	8
D717010594	Screed support bar	8
D717010595	Conveyor crossmember	9
D717010597	Hood frame support	8
D717010598	Hood frame support	8
D717010599	Shaft	3
D717010601	Nut, 1/2"	9
D717010602	Fuel tank mount plate	9
D717010603	Layton hitch pad	9
D717010604	Bumper guide standoff	10
D717010605	Generator mount	10
D717010606	Generator mount	10
D717010607	Rear lift lug	10
D717010609	Handrail mount	10
D717010610	Rear handrail	10
D717010611	Mid handrail	10
D717010614	Frame stiffener	10
D717010615	Fuel tank standoff	10
D717010624	Washdown system mount	10
D717010627	Nut, 0.31"	10
D717010628	Reinforcement bar	10
D717010629	Feed sensor bracket mount	10
D717010631	Insert	10
D717010632	HIC hand pump bracket	10
D717010633	Rear electric bracket	10
D717010634	AC box mount	11
D717010635	Remote fuel filter mount	11
D717010636	Console support bar	11
D717010637	Center weldment mount	11
D717010638	Wire grommet plate	11
D717010640	Auger hose routing plate	11
D717010641	Doorstop mount plate	11
D717010642	C-rail	11
D717010643	Slow vehicle sign bracket	11
D717010644	Battery box bracket	11
D717010645	C-rail	11
D717010646	C-rail	11
D717010649	Rear tie-down lug	11
D717010650	Harness tie-down lug	11
D717010651	Platform doors staple	12
D717011000	Push roller crosshead, 8'	19
D717011001	Traverse	19
D717011004	Ring, spacer	17,19
D717011005	Roller	17,18,19,20
D717011006	Roller	18,20
D717011007	Bearing bolt	17,19
D717011010	Plate, holder, push roller	17,19
D717011011	Pin	17,19
D717011013	Washer, push roller	17,19
D717011014	Bearing, push roller	18,20
D717011015	Washer	17,19
D717011016	Disc spring	18,20
D717011500	Guide pole	3,14
D717011501	Paving guide pole	14,16
D717011504	Cover, Inspection	3
D717011505	Cover, upper inspection	3
D717011506	Guide pole support	14
D717011509	Bracket, hood latch	3
D717011519	Pole, steering guide inner	14
D717011522	Chain connecting link	14
D717011523	Chain, guide pole	14
D717011529	Conveyor guard	3
D717012001	Splash guard, left	3
D717012004	Splash guard, right	3
D717012500	Fume extractor	3,13
D717012501	Blower fume extractor	13

Please check Table of Contents for use of a part number

NUMERICAL INDEX

Part No.	Description	Page
D717012502	Fume extractor	13
D717012505	Transition, fume extractor	13
D717012506	Duct, flex	13
D717012509	Hood half	13
D717012510	Strip, hood transition	13
D717012511	Seal, fume transition	13
D717013000	Front conveyor cover	3,15
D717013001	Front conveyor	15
D717013003	Conveyor cover mount	15
D717013010	Conveyor cover mount	15
D717013012	Skirt, hopper front	15
D717013022	Front handle support	15
D717040000	Screed arm	1,21,22
D717040501	Screed arm, left	21
D717040509	Ball bearing	21
D717040513	Plate, slider	21
D717040514	Pin, screed cylinder pivot	21
D717040515	Shim	21
D717040518	Slope arm	21,23
D717041001	Screed arm, right	21
D717041004	Washer, 0.75"	21
D717041005	Plate, tow point gage pointer	21
D717060000	Conveyor	1,25,26
D717060001	Middle chain support	25,35
D717060004	Outer chain support	25,35
D717060005	Floor, front left	25,36
D717060007	Floor, front right	25,36
D717060009	Floor, rear left	25,36
D717060011	Floor, rear right	25,36
D717060013	Guide plate, right	25,35
D717060018	Guide plate, left	25,35
D717060020	Guide plate, middle	25,35
D717060501	Tension assembly	25,30
D717060502	Housing, shaft spacer	30
D717060503	Shaft, conveyor roller	30
D717060504	Bearing, shaft	30,37
D717060505	Inner shaft slide	30
D717060508	Slide, outer shaft	30
D717060511	Bolt adjuster, outer	30
D717060512	Bolt adjuster, inner	30
D717060513	Tab, adjuster lock	30
D717060515	Sprocket	30,37
D717061000	Conveyor drive	25,27
D717061001	Sprocket, no. 100	27,33
D717061002	Housing, end bearing	29,37
D717061003	Bearing, conveyor drive middle	29,37
D717061004	Bearing, conveyor drive end	29,37
D717061005	Conveyor drive cover	27,36
D717061009	Motor and gear box	27,28
D717061012	Gearbox	28
D717061013	Mount	28
D717061017	Roller chain	27,33
D717061018	Drive, conveyor	27,29
D717061021	Drive shaft	29
D717061022	Key, 2.375"	29,37
D717061023	Key, 3.125"	29,37
D717061024	Spacer, outer conv sprocket	29,37
D717061025	Cap, shaft end	29,37
D717061026	Housing, bearing	29,37
D717061027	Zerk	5,32,222,246
D717061028	Snap ring	29,37
D717061029	Sprocket	29,33
D717061030	Sprocket & hub	29,37
D717061033	Sprocket & hub	29,37
D717061035	Motor	28
D717061500	Conveyor chain	25,31
D717061501	Chain	31,34

Please check Table of Contents for use of a part number

NUMERICAL INDEX

Part No.	Description	Page
D717061502	Conveyor crossbar	31,34
D717064500	Conveyor Lubrication	26,32
D717064501	Hard line, grease	32
D717064502	Hard line, grease	32
D717064503	Hose end	32
D717064504	Coupling, pipe	32
D717064505	Elbow, flareless	32
D717064506	Male connector, straight flareless	32
D717064507	Clamp, stauff	32
D717064508	Clamp, stauff	32
D717064509	Weld plate	11
D717064510	Grease block	11
D717064511	Plug, pipe	32
D717064512	Connector, straight	32
D717064513	Elbow, pipe	32
D717070000	Hopper	1,39
D717070500	Hopper assembly, left side, 10 ft.	39,40,41
D717070501	Hopper, left	40
D717070503	Plate, clamp	40,42
D717070507	Wiper, long	44
D717070508	Wiper	44
D717070509	Hopper pivot pin	40,42
D717070513	Stud. 0.38"	10
D717070516	Hinge	9
D717070518	Pin	40,42
D717071000	Hopper assembly, right side, 10 ft.	39,42,43
D717071001	Right side hopper	42
D717080000	Drive	1,117,118,119
D717080002	Strap, loop	117
D717080006	Clamp, twin stauff	117
D717080007	Shield	118
D717080008	Engine hose support	118
D717080011	Clamp	118
D717080013	Panel, engine sealing	118
D717080014	Panel, surge gap	118
D717080015	Edge trim, engine rear	118
D717080016	Edge trim, panel hole	118
D717080017	Edge trim, second engine rear	118
D717080018	Edge trim, fill hose hole	118
D717080019	Edge trim, oil hose hole	118
D717080021	Woven return hose wrap	118
D717080022	Clamp, 2.5"	119
D717080023	Ball Valve	136
D717081000	Engine frame	117,133,134
D717081001	Engine frame	133
D717081014	Engine, front mount	133
D717081017	Mount, isolation engine frame	133
D717081018	Mount, isolation engine frame	133
D717081023	Engine mount	133
D717081032	Panel	133
D717081033	Panel	134
D717081034	Edge Trim	134
D717081035	Edge Trim	134
D717081500	Muffler, 10` drive complete	117,130,131
D717081501	Muffler, hood mount, bottom	130,132
D717081503	Tube, exhaust	132
D717081505	Tab, exhaust bolt	132
D717081507	Muffler	132
D717081511	Exhaust	130
D717081512	Exhaust pipe	130
D717081513	Flex pipe	130
D717081514	Wrap, woven exhaust	130
D717081515	Exhaust rain cap	130
D717081517	Holder, exhaust pin	132
D717081518	Plate, exhaust flange	132
D717081519	Centerer, muffler	132
D717081520	Mid rain cap, exhaust	132

Please check Table of Contents for use of a part number

NUMERICAL INDEX

Part No.	Description	Page
D717081521	Hinge, exhaust	132
D717081527	Pin, stack hinge	130
D717081528	Quick pin with lanyard	130
D717081529	Clamping u-bolt	130
D717081530	U-bolt, 4"	130
D717081531	Clamp	130
D717081532	Clamp	130
D717081533	Lanyard, hinge pin	130
D717081534	Clamp	130
D717082000	Installation, air cleaner	117,128,129
D717082001	Air cleaner	128
D717082004	Mount, air cleaner	128
D717082005	Duct, suction air	128
D717082006	Hose, hump, 5"	128
D717082007	Hose, reducing hump, 5"	128
D717082008	Clamp, 5 1/2"	128
D717082009	Clamp, 4 1/2"	128
D717082010	Rubber elbow	128
D717082011	Tube, intake coupling	128
D717082012	Tube	128
D717082013	Clamp, 5"	129
D717082016	Kit, restriction indicator remote mount	128
D717083000	Bracket assembly, hydraulik tank	117,120
D717083001	Hydraulic tank bracket	120
D717083003	Tension strap	120
D717083004	Hose holder small	120
D717083016	Pad, tank, long	120
D717083017	Pad, tank, short	120
D717083018	Plate	170
D717083019	U-bolt	5,170
D717083500	Fuel tank	1,169,170,171
D717083501	Fuel tank	169
D717083508	Fuel level sending	169
D717083509	Gasket	169
D717083510	Cover	169
D717083514	Plug, 1"	169
D717083515	Plug, 2"	169
D717083516	Filler neck	169
D717083521	Fuel cap	169
D717083526	Strap, tank hanging	169
D717083527	Tank clamp	169
D717083529	Pad, cork tank strap	169
D717083530	Plug, 1"	169
D717083531	Elbow	170
D717083532	Adapter	118,169
D717083533	Fuel supply hose	170
D717083534	Valve	169
D717083537	Fuel hose	170
D717083541	Adapter, 1-16	170
D717083542	Fuel tank hose, left	58,170
D717083543	Fuel tank hose, right	58,170
D717083546	Hose barb	170
D717084500	Hydraulic tank	117,135,136
D717084501	Hydraulic tank	135
D717084525	Hydraulic suction manifold	135
D717084538	Cap, tank fill	135
D717084544	Hydraulic filter	135,137
D717084545	Gauge, hydraulic sight	135
D717084546	O-ring, suction manifold seal	135
D717084548	Magnet	135
D717084551	Stauff clamp, 2"	136
D717084553	Tube	136
D717084554	Temperature sensor	136
D717084555	Adapter, 1.5"	136
D717085000	Installation, water-oil-air cooler	117,121,122,123,124
D717085002	Isolator, cooler	121
D717085003	Fan, cooler	121

Please check Table of Contents for use of a part number

NUMERICAL INDEX

Part No.	Description	Page
D717085004	Cooler, water-oil-air	121,125
D717085011	Bracket, cooler upper	121
D717085019	Angle, radiator mount	122
D717085020	Pipe, engine to cooler	121
D717085021	Pipe, air charge return	121
D717085022	Pipe, cooler to engine	121
D717085023	Pipe, air charge cooler	121
D717085024	Tank, coolant surge	121
D717085025	Radiator mount	122
D717085027	Case drain manifold	121,126
D717085028	Case drain manifold	126
D717085034	Hose assembly, #95, 08	58
D717085040	Elbow, 1 3/4"	121
D717085041	Hose, cac hump	121
D717085044	Elbow, 2"	121
D717085046	Elbow, 2"	121
D717085048	Assembly, radiator shroud	99,114
D717085049	Nut, 3/16"	11
D717085050	Top radiator shroud	121
D717085052	Clamp, hose	122
D717085054	Sensor, coolant level	121
D717085055	Hose assembly, #105, 32	58,291
D717085057	Hose, fill, surge tank to water pump	122
D717085058	Hose, vent, cooler to surge tank	122
D717085059	Hose, vent, engine to surge tank	122
D717085060	Clamp	122
D717085061	Clamp	122
D717085062	Hose, fill, short extension	122
D717085063	Hose barb elbow	122
D717085066	Edge trim, shroud hole	114
D717085068	Shroud left	114
D717085070	Shroud center	114
D717085072	Shroud right	114
D717085075	Insulation pad, cooler support	124
D717085077	Ubolt, CAC support	123
D717085078	Sight gauge	123
D717085079	Seal, cooler front side	114
D717085080	Edge trim, front seal	114
D717085081	Edge trim, shroud front	114
D717085082	Edge trim, shroud rear	114
D717085083	Edge trim	123
D717085084	Seal	123
D717085089	Edge trim, shroud middle	114
D717085090	Conversion adapter	170
D717085092	Edge trim support, right	4
D717085094	Drain hose	124
D717085096	Edge trim support, left	123
D717085097	Edge trim support, middle	123
D717085098	Edge trim support, right	123
D717085099	Edge trim support, right end	123
D717085100	Edge trim support, right top	123
D717085101	Edge trim support, left end	123
D717085102	Needle valve	124
D717090000	Hydraulic assembly	1,45,46,47,48
D717090001	Hose kit, hydraulic, 10' tracked paver	46,53,54
D717090502	Accumulator, Track tension circuit	45
D717090504	Test Port	46
D717090505	Test port, male	46,126,140
D717090526	Run tee, 04-04-04-04	46
D717090530	Rail mount clamp	46
D717090531	Rail mount clamp	46
D717091001	Auger lift cylinder	45,49
D717091002	Pressure filter	46,65
D717091018	Hose retention	207,221,231,245
D717091019	Auger hose bracket	221,245
D717091020	Quick release pin	221,245
D717091021	Clamp, hose	13,221,245

Please check Table of Contents for use of a part number

NUMERICAL INDEX

Part No.	Description	Page
D717091026	Bulkhead fitting, 04	46
D717091027	Bulkhead fitting, 08	46
D717091028	Bulkhead fitting, 12	46
D717091501	Cylinder, hopper pivot	45,52
D717091502	Cylinder, screed lift, rear	45,51
D717091503	Cylinder, screed level, front	45,50
D717091504	Pin, screed lift cylinder	45
D717091505	Pin, screed front lift cylinder	45
D717091507	Valve bank, rear work function	66,67
D717091509	Pin, screed rear lift cylinder	45
D717091510	Pin, cylinder	45
D717093501	Pin, cylinder pivot	45
D717093502	Tab, pin lock	45
D717093506	Clamp, accumulator mounting	45
D717100000	Electrical system	1,173,174,175
D717100500	Generator drive	173,184
D717100501	Generator	184
D717100502	Coupling, 35mm	184
D717100505	Mount, generator isolator	184
D717100506	Motor, hydraulic	184,185,186
D717101000	Engine controls	173,192,193,194
D717101001	Battery	192
D717101003	Floor, battery box	192
D717101004	Side, battery box	192
D717101007	Hour meter	187
D717101008	J-bolt, 3/8"	192
D717101009	Crossbar, battery tie down	192
D717101010	Fuseholder, battery box	192
D717101011	Switch, battery disconnect	193
D717101012	Partition	192
D717101013	Relay starter solenoid	193
D717101015	Diode	193
D717101016	Horn, disc 24V	174
D717101018	Fuseholder, inline	193
D717101019	Grommet	173,256
D717101020	Grommet	173
D717101021	Side, battery box	192
D717101022	Side, battery box, lh	192
D717101023	Harness, ECM	174
D717101028	Harness, engine CAN	174
D717101029	Cable, battery, pos term to neg term	193
D717101030	Cable, battery, pos term to bat disc sw	193
D717101031	Cable, starter NEG term to chassis ground	174
D717101032	Cable, battery disc sw to F1 fuse	193
D717101033	Cable, battery disc sw to F2 fuse	193
D717101034	Cable, battery disc sw to F4 fuse	194
D717101035	Cable, F1 fuse to F3 fuse	194
D717101036	Cable, F3 fuse to X8	194
D717101037	Harness, starter - alternator - air	174
D717101038	Cable, F1 fuse to R1 (starter relay) contact	194
D717101039	Cable, altern. NEG term to engine ground stud	174
D717101040	Cable, battery, NEG term to X 9	174
D717101043	Nylon hole plug, 7	178
D717101044	Spacer, fuse holder	193
D717101045	Fuse, 30A	193
D717101046	Fuse, 100A	193
D717101047	Fuse, 50A	194
D717101048	Fuse, 125A	194
D717101049	Harness, alternator-air	194
D717101051	Edge trim	194
D717101052	Cable, F7 fuse to R1 starter relay	194
D717101054	Edge guard	194
D717101055	Cable, generator to mainframe	174
D717101501	Controller, propel handle	176,180
D717101502	Controller, speed dial	176,180
D717101503	Controller, steering calibration	176,180
D717101504	Switch, propel mode selection	176,180

Please check Table of Contents for use of a part number

NUMERICAL INDEX

Part No.	Description	Page
D717101505	Steering unit	176,180
D717101506	Controller, propel system	187
D717101507	Display with program	176
D717101508	Alarm 24V, reverse indication	173
D717101509	Pressure switch	46
D717101513	Harness, rear functions	174
D717101514	Harness, front functions	174
D717101515	Inclinometer	188
D717101516	Harness, rh front headlight	255
D717101517	Harness, lh front headlight	255
D717102000	Auger & conveyor controls, moba	173,195,266,269,279,282
D717102001	Controller, feed system	266,279
D717102002	Sonic pwm sensor, feed system	195,269,282
D717102003	Coil cable, conveyor sensor	195,269,282
D717102004	Cable 15', controller-tractor	195,269,282
D717102005	Bracket, sonic sensor	195,269,282
D717102006	MOBA programmer	290
D717102012	Coil cable, auger sensor	195,269,282
D717102013	Feeder controller	264,277
D717102014	Potentiometer	264,277
D717102015	Potentiometer knob	264,277
D717102501	Topcon leveling control	266,268,279,281
D717102502	Sonic tracker II	268,270,281,283
D717102503	Slope, dual port	268,281
D717102504	Box, controller single side base	268,281
D717102505	Operator manual, leveling controll	268,281
D717102507	Case	268,281
D717102508	Cable, controller paver	268,281
D717102509	Temp baik w/sleeves	268,281
D717102510	Bracket, sonic tracker	268,281
D717102511	Kit, sonic tracker	268,281
D717102513	Coil cord 15ft, sonic tracker-controller	268,281
D717102514	Cable, slope system	268,281
D717102515	Cable, slope system	268,281
D717102516	Bracket, short, tom arm mount	268,281
D717102517	Bracket, l-arm long fin	268,281
D717102520	Harness, work function controls	174
D717103000	Operator console lh	173,176,177,178,179
D717103001	Push button e-stop	176,180
D717103002	Switch, key ignition	176
D717103003	Toggle switch, 7	176,180
D717103004	Grommet	176,180
D717103005	Plate, switch panel	176
D717103006	Plate, switch panel	176
D717103007	Plate, switch panel	176,180
D717103008	Plate, switch panel	176
D717103009	Plate, access panel	176,180
D717103010	Push button, parking brake	176,180
D717103011	Push button, horn	177,180
D717103013	LED, yellow	176,180
D717103014	LED, green	177,180
D717103015	NC contact, block	177,181
D717103016	NO contact	177,181,187
D717103017	Maintained action block	187
D717103018	Toggle switch, 3	177,187
D717103019	Light, dash board	177,181
D717103020	Bulb 24V, dash board light	177,181
D717103021	Toggle switch, 1	177,181
D717103022	Toggle switch, 3	177
D717103025	Barrier block	177,181
D717103026	Rubber grommet, 5/16"	178,181,189
D717103027	Wiring diagram, left console	178
D717103028	Harness, left console to DC box	178
D717103029	Edge protector	179,182
D717103030	Shoulder bolt, 3/8"	178,182
D717103032	Switch panel gasket, small	178,182
D717103033	Switch panel gasket, large	178,182

Please check Table of Contents for use of a part number

NUMERICAL INDEX

Part No.	Description	Page
D717103034	Shoulder bolt, 3/8"	178,182
D717103035	Alarm, electric	178,182,183
D717103036	Toggle switch boot	179,182,183,189
D717103500	Operator console rh	173,180,181,182,183
D717103501	Plate, switch panel	180
D717103502	Plate, switch panel	180
D717103503	Plate, access panel	180
D717103504	Wiring diagram, right console	182
D717103505	Harness, right console to DC box	182
D717104000	DC control panel	173,187,188,189
D717104001	Enclosure	187
D717104003	Relay base	187
D717104004	Diode, relay surge protection	187
D717104005	Relay, 24V	187
D717104006	Relay latch	187
D717104007	Base, latch relay	187
D717104008	Surge protect diode	189
D717104009	Bracket, battery switch, fuse	192
D717104010	Flasher, 24V	189
D717104011	Push button, warning lights	187
D717104012	Clip hold down, control relay	189
D717104013	Clip hold down, latch relay	189
D717104014	Terminal block, 2-wire	188
D717104015	Terminal block. 3-wire	188
D717104016	Terminal block, 4-wire	187
D717104017	End stop, terminal block	187,190,197
D717104021	End plate, 2-wire terminal block	188
D717104022	End plate, 3-wire terminal block	189
D717104023	End plate, 4-wire terminal block	187
D717104029	Block terminal, 2-wire	187
D717104033	End plate, 2 wire fuse block	189
D717104035	Spacer, duetsch connector	188
D717104036	Wiring diagram, DC control	189
D717104037	Barrier block	188
D717104038	P clamp, 1.25"	189
D717104039	Relay, 80A	189
D717104040	Din rail slotted	187
D717104041	Relay, 24V	189
D717104042	Relay base, 24V	189
D717104500	AC main panel	173,190,191
D717104503	Breaker main	190
D717104504	Circuit breaker	190
D717104505	Pad, mounting GFCI circuit breacker	190
D717104506	Box	190
D717104507	Contactor, 18A	190
D717104508	Terminal block, 3-wire	190
D717104509	End cover, terminal block	190
D717104511	Breaker main, 15A	190
D717104512	Bracket, ac main panel	173
D717104513	AC main panel plate	11
D717104515	Fitting straight, 1"	190
D717104516	Fitting straight, 1/2"	190,256
D717104517	Bar, solid neutral	191
D717104518	Elbow, 1"	191
D717104519	Cord grip	191
D717104520	Harness, generator to AC panel	191
D717104521	Harness, AC main panel to aux panel	197
D717104522	Harness, AC main panel to fume extractor	191
D717104523	Wiring diagram, AC main panel	191
D717104524	Wiring diagram, AC aux panel	197
D717105500	Lighting system	174,196
D717105501	Bracket, front light	196
D717105503	Light 24V, work system	196
D717105504	Grommet	196
D717105505	Grommet	196
D717105507	Power outlet	196
D717110000	Platform	1,99,100

Please check Table of Contents for use of a part number

NUMERICAL INDEX

Part No.	Description	Page
D717110003	Grating, rear	99
D717110004	Grating, rear	99
D717110006	Clip, Grating tie down	99
D717110009	Bracket, right side door assy	99
D717110010	Latch, side door	112
D717110011	Bracket, left side door assy	99
D717110014	Bracket, sensor connector	100
D717110016	Catch	113
D717110017	Pivot release, right	100
D717110018	Pivot release, left	100
D717110020	Shoulder bolt	100
D717110500	Footwell, platform	99,104,105
D717110502	Door, left	104
D717110504	Door, middle	104
D717110506	Plate, lh side extension	104
D717110507	Plate	105
D717110508	Plate, door stop	104
D717110510	Door, right	104
D717111500	Hood frame	99,106,107,108
D717111501	Hood frame	106
D717111511	Hood cover	106
D717111514	Front hood cover	106
D717111525	Door stop, rear hood	104,106
D717111528	Hood cover	106
D717111531	Cover	108
D717111534	Front hood cover, curbside	106
D717111535	Paddle latch	112
D717111536	Door, battery switch	107
D717111538	Fuel door	106
D717111542	Insulation pad, rear mid door	104
D717111543	Insulation pad, rear left door	104
D717111544	Insulation pad, battery box, front	192
D717111545	Insulation pad, rear, right door	104
D717111546	Insulation pad, right rear walk	104
D717111547	Insulation pad, side, right walk	104
D717111548	Insulation Pad, side, left walk	104
D717111549	Insulation pad, top rear mid	107
D717111550	Insulation pad , top left rear	106
D717111551	Insulation pad, top right rear	106
D717111552	Insulation pad, left door	112
D717111554	Insulation pad, front, right door	106
D717111555	Insulation pad, front left, right side	106
D717111556	Insulation pad, front right, right side	106
D717111557	Insulation pad, front, right, front	107
D717111558	Insulation pad, front right top	107
D717111559	Insulation pad, front mid	106
D717111560	Insulation pad, front left	106
D717111561	Insulation pad, front tube, bottom	106
D717111562	Insulation pad, cross tube, bottom	107
D717111563	Insulation pad, mid tube bottom	106
D717111564	Insulation pad, rear upright	107
D717111565	Insulation pad, side left	107
D717111566	Insulation pad, side right	106
D717111567	Insulation pad, left door	112
D717111569	Insulation pad, Panel, Cylinder, right	99
D717111570	Insulation pad, Panel, Cylinder, left	99
D717111571	Insulation pad, battery box, side	192
D717111577	Insulation pad, rear right	107
D717111578	Insulation pad, battery bottom	192
D717111580	Screw, M10	104,107,112
D717111581	Spacer, prop rod	107
D717111584	Supprt, hood frame	107
D717111586	Insulation pad, battery box, lh side	192
D717112501	Side panel, rear right	112
D717113000	Operator station, left	99,101,102
D717113001	Swing station frame	101,102
D717113009	Swing arm	101,102,109,110

Please check Table of Contents for use of a part number

NUMERICAL INDEX

Part No.	Description	Page
D717113015	Operator console	176,180
D717113024	Cover, swing arm	177,181
D717113025	Cable, pivot release	176,181
D717113040	Knob, umbrella clamp	101,102,109,110
D717113043	Placard, slow moving	4
D717113047	Bearing, operator swing arm	101,102,109,110
D717113048	Snap ring, operator station	101,102,109,110
D717113051	Console cover	178,182
D717113500	Operator station, right	99,109,110
D717113501	Swing station frame	109,110
D717114000	Side moulding	99,112,113
D717114001	Side panel, right	112
D717114500	Side panel, left	112
D717115000	Left side	112
D717115003	Shoulder bolt, 3/8"	105,108,112
D717144000	Schematic, hyd system, 10' tracked paver	46
D717145500	Schematic, DC electrical system	174
D717146000	Schematic, AC electrical system	174
D717170000	Track	1,69
D717170500	Track left	69,85,86,87
D717170502	Track, Rubber, LH	85
D717170503	Track drive, left	85
D717170544	Bogie assembly	70,74,85,88
D717170545	Bogie, spindle	74,75,88,89
D717170546	Bogie spindle plate	75,89
D717170547	Bushing, bogie	74,88
D717170550	Hub, bogie wheel	74,88
D717170554	Track shield	85
D717170557	Bonded idler wheel	70,85
D717170558	Bonded roller wheel	74,88
D717170564	Track sheild, middle	85
D717170565	Track shield	85
D717170566	Stud, 3/8"	10
D717170570	Bushing, tensioner	70,85
D717170576	Tension pin	71,86
D717170577	Retainer, tension assembly	71,86
D717170579	Tensioner	70,85
D717170581	Pin, track tensioner cylinder anchor	71,86
D717170582	Washer	70,74,85,88
D717170583	Bushing	70,85
D717170584	Bogie pin	71,86
D717170588	Idler frame	70,85
D717170599	Bogie spindle	75,89
D717170600	Gearbox, track drive	70,80,81,82,83,86,95,96,97 98
D717170601	Hair pin	71,86
D717170602	Castle nut, 1 1/4"	70,74,85,88
D717170603	Dust cap	74,88
D717170609	Track tensioner pin	71,86
D717170614	Jam nut, 5/8"	71,86
D717170615	Screw, 5/8	71,86
D717170616	Tensioning cylinder pin	72,87
D717170618	Tap bolt, 3/4"	71,86
D717170622	Assembly, hub, idler wheel	70,76,85,90
D717170623	Hub, idler wheel	76,90
D717170625	Dust cover, bolt-on	70,85
D717170626	Wheel lug bolt, M14	74,88
D717170627	Spacer	72,87
D717170628	Seal	76,90
D717170629	Tapered roller bearing	76,90
D717170630	O-ring	72,87
D717170636	Dirt guard	71,86
D717170639	Track tension cylinder	70,73,85,91
D717171000	Track right	69,70,71,72
D717171001	Track frame	70
D717171003	Track shield	70
D717171004	Rubber track, right	70

Please check Table of Contents for use of a part number

NUMERICAL INDEX

Part No.	Description	Page
D717171005	Track shield, middle	70
D717171006	Track shield, back	70
D717171010	Bonded drive wheel	71,85
D717171014	Motor track assy	70,77,78,79,85,92,93,94
D717172001	Screed leveling guide	69,84
D717172002	Arm retainer	84
D717172007	Arm bracket cover	84
D717172008	Plate, tow point gage	69
D717172011	Shoulder bolt	84
D717172012	Spring pin	84
D717180000	Auger	207,210,231,234
D717180001	Auger	1,207,208,209,231,232,233
D717180002	Plate	210,234
D717180003	Auger slide bushing	207,231
D717180004	Bushing, bolt	207,231
D717180006	Washer, 5/8"	207,231
D717180009	Auger splash, right	207,231
D717180010	Auger splash, left	207,220,231,244
D717180012	Auger splash plate, left	220,244
D717180013	Threaded boss	220,244
D717180014	Tapped mount plate	220,244
D717180015	Gusset plate	220,244
D717180029	Asphalt guard plate	220,244
D717180030	Nut, 1/4"	220,244
D717180034	Plate, auger mount	210,234
D717190000	Pump drive	1,139,140
D717190001	O-ring	139
D717190002	O-ring, 154	139
D717190003	O-ring, 152	139
D717190004	Adapter, pump drive housing	139
D717190005	Adapter, flywheel flexplate	139
D717190006	Hose assembly	291
D717190500	Gear box, splitter	139
D717191000	Pump, propel front	139,141,142,143,144,145,146
D717191500	Pump, propel rear	139,162,163,164,165,166,167
D717192500	Pump, auger tandem	139,147,148,149,150,151
D717193001	Pump, vibration	139,161
D717193500	Pump, generator	139,155,156,157,158,159,160
D717194500	Pump, conveyor / work	139,152,153,154
D717410000	Installation decal	1,201,202
D717410002	Tape, refl., frame channels	202
D717410003	Tape, refl., op. station bot. tubes	201
D717410004	Tape, refl., hop. flsh´g bolt´g plates	201
D717410005	Tape, refl., back of walkway	201
D717410006	Decal, console lh, upper left	177,181
D717410007	Decal, left console, lower left	177
D717410008	Decal, console lh, lower right	177
D717410009	Decal, console lh, upper right	177
D717410010	Decal, right console, lower left	181
D717410011	Decal, console rh, upper right	181
D717410012	Decal, console rh, lower right	181
D717410013	Decal, dc control panel	187
D717410014	Decal, battery disconnect	193
D717410015	Decal, Screed leveling ruler	69
D717410016	Anti slip tape	201
D717410017	Anti slip tape	201
D717410018	Anti slip tape	201
D717410019	Anti slip tape	201
D717410020	Anti slip tape	201
D717410021	Anti slip tape	201
D717410022	Decal, fuse list	189
D717410023	Scale	201
D717410024	Decal, fuse holder	194
D717410025	Decal, fuse holder	194
D717410026	Decal, starter relay	194
D717410027	Decal, right rear sensor plugs	201
D717410028	Decal, left rear sensor plugs	201

Please check Table of Contents for use of a part number

NUMERICAL INDEX

Part No.	Description	Page
D717410029	Decal, AC main panel	191
D717410031	F1000T manual kit	289,299
D717410045	Operation and Maintenance Manual, A5	298,299
D717410059	Safety Manual, A5	298,299
D717410066	Parts List, Letter	298,299
D717410073	Cummins CD and Parts Manual, Letter	298,299
D717410080	Cummins Operator and Maint Manual, Letter	298,299
D717410087	Carlson Screed EZIV 10' Manual, Letter	298,299
D717410115	Leveling System Ops Man, Topcon / Moba, A5	298,299
D717410129	Operation and Parts Manual Set, CD	298,299
D717410136	Decal, F1000T	202
D717800001	Adapter, 20-12	47
D717800008	Elbow, 32-32	135
D717800057	Adapter, 10-10	66
D717800064	Elbow, 10-10	66
D717800066	Adapter, 12-12	126
D717800085	Elbow, 12-12	126,136
D717800092	Elbow, 12-12, extra long	66
D717800099	Elbow, 12-12, 45 deg	126
D717800113	Elbow, 12-12	126
D717800176	Elbow, 16-16	136
D717800218	Adapter, 16-16	66,135
D717800246	Adapter, 04-04	66
D717800260	Run tee, 04-04-04	66
D717800281	Adapter, 06-04	66
D717800323	Adapter, 06-06	66,208,223,224,225,232,247 248,249
D717800379	Elbow, 08-08	47
D717800386	Tee, 08-08-04	45
D717800435	Snap ring	18,20
D717800442	Screw, M8	117
D717800449	Screw, M20	71,87
D717800456	Screw, M16	133
D717800463	Screw, M12	133
D717800470	Screw, M12	133
D717800477	Screw, M12	117
D717800484	Screw, M10	139,184
D717800491	Screw, M10	122,128
D717800498	Screw, M10	118
D717800505	Screw, M10	118
D717800512	Screw, M10	123
D717800519	Screw, 5/8"	25,35,207,231
D717800526	Screw, 5/8"	207,231
D717800533	Screw, 5/16"	45
D717800540	Screw, 5/16"	117
D717800554	Screw, 5/16"	46,171,173
D717800561	Screw, 5/16"	3,17,19,107,123,173,192
D717800568	Screw, 5/16"	45,174,260
D717800582	Screw, 3/8"	104
D717800589	Screw, 3/8"	5,112
D717800596	Screw, 3/8"	4,40,42,99,139,260
D717800603	Screw, 3/8"	4,14,46,99,104,106,128,135 259
D717800610	Screw, 3/8"	4,45,86,87,104,118,122,134
D717800617	Screw, 3/8"	30,71,100,114,120,123,169
D717800631	Screw, 3/4"	207,231
D717800638	Screw, 3/4"	16,28
D717800645	Screw, 3/4"	16
D717800652	Screw, 1-8	133
D717800659	Screw, 10-32	128
D717800666	Screw, 1/4"	100,188
D717800673	Screw, 1/4"	4,40,42
D717800680	Screw, 1/4"	22,113,117,173,191,198,255
D717800687	Screw, 1/4"	112,178,182,189,197
D717800694	Screw, 1/2"	135
D717800701	Screw, 1/2"	4
D717800708	Screw, 1/2"	101,102,109,110,133,184

Please check Table of Contents for use of a part number

NUMERICAL INDEX

Part No.	Description	Page
D717800715	Screw, 1/2"	40,42,120,130
D717800722	Screw, 1/2"	15
D717800729	Screw, 1/2"	25,28,35,40,42
D717800736	Screw, 1/2"	15,28,101,102,109,110,115 123,133,140,169,184,226,230 250,254
D717800743	Screw, 1/2"	14,122,135,170,226,230,250 254
D717800750	Screw,1/2"	4,135
D717800757	Screw, M10	139
D717800778	Screw, 1/4"	136
D717800785	Nyloc nut, 1/4"	100,117,170,173,178,188,198
D717800792	Nut, 3/8"	112
D717800806	Lock washer, 10	118
D717800820	Lock nut, M10	104,107,112,122
D717800827	Lock nut, 5/16"	3,46,99,105,107,117,123,173 192
D717800834	Lock nut, 3/8"	4,13,21,23,27,30,36,71,86,99 107,112,118,123,128,135,170 190,192,196,259
D717800841	Lock nut, 3/4"	17,19,263,267,275,280,288
D717800848	Lock nut, 1-8	133
D717800855	Lock nut, 1/4"	179,182,193,197
D717800862	Lock nut, 1/2"	101,102,109,110,120,122,131 133,169,184
D717800869	Lock nut, M8	188,190
D717800876	Lock nut, M6	178,182,197,255
D717800883	Lock nut, M10	113,178,182,188,190,197
D717800890	Jam nut, 5/8"	101,102
D717800897	Lock nut, M10	128,193,221,245,260
D717800904	Lock nut, 5/16"	21,105
D717800911	Nut, 1/4"	257
D717800918	Screw, 5-16"	3
D717800925	Screw, 3/8"	71,87
D717800946	Hex nut, M8	188
D717800953	Screw, M8	188,191
D717800960	Screw, M8	188
D717800967	Hex nut, M8	188
D717800974	Screw, M6	130,178,182
D717800981	Screw, 5/16"	4
D717800988	Screw, 5/16"	108
D717800995	Screw, 5-16"	105
D717801002	Hex nut, M10	113,178,182
D717801009	Hex nut, M10	190,197
D717801016	Screw, M10	188
D717801023	Hex nut, 5/16"	47,107,120,171
D717801030	Nut, 3/4"	3
D717801037	Screw, 3/4"	72,86
D717801044	Narrow washer, 0.38"	4,13,21,23,27,30,36,40,42,45 71,86,99,104,107,112,114,118 120,122,128,135,139,169,177 181,187,192,196,259
D717801051	Narrow washer, 0.313"	3,17,19,45,72,87,99,104,107 117,123,171,173,192,260
D717801058	Narrow flat washer, 0.25"	4,100,112,117,170,173,177 181,188,190,193,197,255
D717801065	Washer, 1"	72,74,86,88,133,260
D717801072	Narrow washer, 0.75"	16,17,19,25,28,35,71,86,207 231,263,267,275,280,288
D717801079	Narrow washer, 0.625"	25,27,35,207,226,230,231,250 254
D717801086	Flat washer, 0.5"	4,13,14,15,25,28,35,40,42,101 102,109,110,115,120,122,131 133,135,140,169,184,222,226 230,246,250,254
D717801093	Washer, 0.164"	188,190
D717801100	Washer, #6	130,170,178,181,197,255

Please check Table of Contents for use of a part number

NUMERICAL INDEX

Part No.	Description	Page
D717801107	Washer, 8mm	117
D717801114	Washer, 16mm	133
D717801121	Washer, 14mm	133
D717801128	Washer, 12mm	117,133,139
D717801135	Washer, 10mm	107,118,122,128,139,184
D717801142	Washer, 10	113,128,178,181,182,188,190 193,197,221,245,260
D717801149	Washer, 20mm	71,86
D717801156	Nut, 5/8"	207,231
D717801163	Nut, 1/2"	15
D717801191	Retaining ring	45
D717801198	Hex bolt, 5/16"	21
D717801205	Screw, 3/8"	16
D717801212	Screw, 1/4"	257
D717801219	Screw, 1/2"	40,42
D717801226	Cotter pin, 3/16"	70,74,85,88
D717801233	Nut, M6	130
D717801240	Screw, M10	193,221,245
D717801247	Screw, M10	260
D717801268	Screw, 3/8"	177,181
D717801275	Screw, 3/8"	188
D717801282	Screw, 3/4"	84
D717801289	Screw, 1/4"	177,181
D717801296	Screw, 1/4"	193
D717801303	Screw, 1/2"	21,29,37
D717801310	Washer, 1/4"	174,257
D717801317	Nut, 3/4"	207,231
D717801324	Nut, 1/2"	11,115
D717801331	Screw, 5/16"	71,86,87
D717801338	Screw, 3/8"	106
D717801359	Cotter pin, 0.25"	17,19
D717801380	Screw, M6	255
D717801387	Screw, 3/4"	84
D717801422	Clamp, cushioned	179
D717801443	Screw, 1/4"	4
D717801464	Hex nut, 5/16"	120
D717801513	Washer, 1/4"	198
D717801520	Cushioned clamp, 1.5"	178,182
D717801541	Fitting, 06-05	16
D717801548	Adapter, 32-32	121
D717801555	Elbow, 32-32	124,126
D717801583	Screw, M6	170
D717801597	Screw, 5/16"	46,100
D717801604	Screw, 1/4"	112,207,231
D717801611	Screw, 1/4"	40,42
D717801618	Screw, 1/4"	193
D717801632	Hex head screw, 3/4"	35
D717801653	Hex head screw, 3/8"	23,27,36
D717801667	Hex head screw, 5/8"	25,35
D717801674	Screw, 5/8"	27
D717801681	Screw, M12	140
D717801688	Screw, M12	139
D717801716	Washer, 1/4"	21,40,42,207,231
D717801828	Screw, 3/4"	17,19
D717801849	Hex nut, 1/4"	40,42,113
D717801877	Plug, 10	119,140
D717801905	Adapter, M10-M22	119
D717801912	Elbow, 12-12	208,232
D717801919	Adapter, straight	136
D717801933	Plug, 06	126
D717801954	Elbow, 1/4"-3/8"	124
D717801961	Adapter, 12-3/4"	208,232
D717801968	Plug, 16	135
D717801975	Adapter, 24-24	135
D717802010	Reducer bushing, 16-12	123
D717802017	Elbow, 12-12	121
D717802024	Elbow, 12-12	136,171

Please check Table of Contents for use of a part number

NUMERICAL INDEX

Part No.	Description	Page
D717802031	Elbow, 12-12	208,232
D717802038	Adapter, 1/2"-32	135
D717802045	Hose barb, 06-04	124
D717802052	Elbow, 04-04	121
D717802094	Screw, 5/8"	27
D717802101	Set screw, 3/8"	30,37
D717802276	External plug, 04	66
D717802416	Screw, 3/8"	29,37
D717802437	Screw, 5/8"	226,230,250,254
D717802444	Screw, 3/8"	21
D717802647	Nipple, 16-16	207,223,224,225,231,247,248 249
D717802654	Body, 16-16	207,223,224,225,231,247,248 249
D717802668	Coupling, female, 08-10	208,224,225,232,248,249
D717802675	Coupling, male, 08-10	208,223,224,225,232,247,248 249
D717802682	Elbow, 08-08	208,232
D717802689	Adapter, 12-16	208,223,224,225,232,247,248 249
D717900500	Truck hitch	5,16
D717900501	Truck hitch	16
D717900502	Guide pole support	16
D717900503	Guide pole support, left	16
D717900504	Guide pole support, right	16
D717900505	Plate, truck hitch stop	16
D717900506	Hose list, truck hitch option	16
D717901501	Non contacting SAS	266,270,279,283
D717901502	Supporting documents	270,283
D717901503	Case	270,283
D717901504	Temp bail with sleeves	270,283
D717901505	Sonic averaging	270,271,283,284
D717901506	Tow arm mounting bracket	270,283
D717902668	Coupling	223,247
D717903008	Auger Extensions, 11.4"	209,223,233,247
D717903015	Auger Extensions, 17"	209,224,233,248
D717903022	Auger extensions, 34.1"	209,225,233,249
D717903071	Hose, 12	223,224,247,248
D717903078	Hose, 06	223,224,247,248
D717903085	Hose extension, 12	225,249
D717903092	Hose, 06	225,249
D717903500	Tunnel extensions kit	209,226,229,230,233,250,253 254
D717903501	Splash extension, right	226,230,250,254
D717903502	Splash extension, left	226,230,250,254
D717903506	Extension, right	226,230,250,254
D717903507	Extension, left	226,230,250,254
D717903511	Clamp, right extension	226,230,250,254
D717903514	Clamp, left extension	226,230,250,254
D717903515	Clamp	226,230,250,254
D717904500	Umbrella	103,111
D717905000	Auxiliary power panel	174,197,198
D717905001	Circuit breaker, 1 pole	197
D717905002	Circuit breaker, 2 pole	197
D717905003	Receptacle	197
D717905004	Receptacle	197
D717905005	Nema box	197
D717905006	Din rail	190,197
D717905007	Elbow, 1/2"	197
D717905008	Decal, auxiliary power panel	197
D717905500	Option, Balloon lights	266,279
D717906000	Roading lights	1,255,256
D717906001	Light, tail left side	255
D717906002	Light, tail right side	255
D717906003	Light, side amber	255
D717906004	Head light, left side	255
D717906005	Head light, right side	255

Please check Table of Contents for use of a part number

NUMERICAL INDEX

Part No.	Description	Page
D717906006	Bulb, amber	255
D717906009	Bracket, tail lights	255
D717906010	Clamp, 3/4"	255
D717906014	U-bolt, 3/8"	255
D717906015	Plate	255
D717906500	Warning beacon	1,257
D717906501	Rotating beacon	257
D717906503	Pole mount, warning beacon	257
D717906505	Harness	257
D717909500	Wash down	1,259,260
D717909501	Tank	259
D717909502	Pump	259
D717909503	Spray wand	259,261
D717909505	Hose reel	259
D717909507	Grommet	259
D717909508	Wash down suction hose	259
D717909509	Hose, pump to hose reel	259
D717909511	Strainer, suction	259
D717909512	Mount, release agent tank	259
D717909513	Mount, wash down spray wand	259
D717909514	Nipple, 3/8"	260
D717909515	Coupling, 1/4"	260
D717909516	Clamp, worm drive	170,259
D717909517	Coupling, anchor	259
D717909518	Hose barb	259
D717909519	Beaded hose barb	259
D717909520	Washer, seal	259
D717909521	Nipple, 3/8"	259
D717920002	Hose assembly, #1, 08	62
D717920009	Hose assembly, #2, 12	63
D717920016	Hose assembly, #3, 12	63
D717920023	Hose assembly, #4, 04	63
D717920030	Hose assembly, #5, 08	62
D717920037	Hose assembly, #6, 08	62
D717920058	Hose assembly, #11, 12	59
D717920065	Hose assembly, #12, 12	61
D717920072	Hose assembly, #13, 12	59
D717920079	Hose assembly, #14, 08	63
D717920086	Hose assembly, #15, 08	63
D717920093	Hose assembly, #19, 04	59
D717920100	Hose assembly, #20, 16	59
D717920107	Hose assembly, #21, 16	59
D717920114	Hose assembly, #22, 12	59
D717920121	Hose assembly, #23, 04	59
D717920128	Hose assembly, #24, 04	59
D717920135	Hose assembly, #25, 12	55
D717920142	Hose assembly, #26, 04	59
D717920149	Hose assembly, #27, 04	59
D717920156	Hose assembly, #28, 04	63
D717920163	Hose assembly, #29, 04	63
D717920170	Hose assembly, #32, 04	62
D717920177	Hose assembly, #33, 04	62
D717920184	Hose assembly, #34, 04	62
D717920191	Hose assembly, #35, 04	62
D717920198	Hose assembly, #36, 08	63
D717920219	Hose assembly, #39, 04	62
D717920233	Hose assembly, #43, 12	56
D717920235	Hose assembly, #43, 12	55
D717920240	Hose assembly, #42, 12	55
D717920247	Hose assembly, #44, 12	59
D717920254	Hose assembly, #45, 16	55
D717920261	Hose assembly, #46, 16	55
D717920268	Hose assembly, #47, 08	63
D717920275	Hose assembly, #48, 08	63
D717920282	Hose assembly, #49, 08	63
D717920289	Hose assembly, #50, 04	63
D717920296	Hose assembly, #52, 04	63

Please check Table of Contents for use of a part number

NUMERICAL INDEX

Part No.	Description	Page
D717920303	Hose assembly, #54, 10	56
D717920310	Hose assembly, #55, 10	56
D717920317	Hose assembly, #56, #57, 16	55
D717920324	Hose assembly, #58, 08	55
D717920331	Hose assembly, #59, 08	55
D717920338	Hose assembly, #60, #61, 12	56
D717920352	Hose assembly, #63, #64, 10	56
D717920359	Hose assembly, #65, 16	63
D717920366	Hose assembly, #66, 12	56
D717920373	Hose assembly, #67, 12	56
D717920380	Hose assembly, #68, 12	59
D717920387	Hose assembly, #69, 08	62
D717920394	Hose assembly, #70, 08	62
D717920429	Hose assembly, #75, 16	61
D717920450	Hose assembly, #81, 08	61
D717920457	Hose assembly, #82, 16	59
D717920464	Hose assembly, #83, 16	59
D717920471	Hose assembly, #84, 16	59
D717920478	Hose assembly, #85, 16	59
D717920485	Hose assembly, #86, 16	59
D717920492	Hose assembly, #87, 04	63
D717920499	Hose assembly, #89, 08	63
D717920506	Hose assembly, #90, 16	59
D717920513	Hose assembly, #91, #92, 12	55
D717920520	Hose assembly, #93, 12	55
D717920527	Hose assembly, #94, 12	55
D717920534	Hose assembly, #95, #96, 06	63,267,275,280,288
D717920541	Hose assembly, #97, 04	64,267,275,280,288
D717920555	Hose assembly, #99, 12	60
D717920569	Hose assembly, #101, 16	60
D717920576	Hose assembly, #102, 16	60
D717920583	Hose assembly, #103, 16	56
D717920590	Hose assembly, #104, 32	56
D717920597	Hose assembly, #109, 06	55
D717920604	Hose assembly, #110, 06	55
D717920611	Hose assembly, #111, #112, 04	60
D717920625	Hose assembly, #113, 04	56
D717920632	Hose assembly, #114, #115, 08	61,267,275,280,288
D717920639	Hose assembly, #116, 06	60
D717920646	Hose assembly, #124, 20	58,291
D717920653	Hose assembly, #125, 16	56
D717920660	Hose assembly, #126, 04	57
D717920667	Hose assembly, #127, 04	57
D717920674	Hose assembly, #128, 04	57
D717920681	Hose assembly, #129, 04	57
D717920688	Hose assembly, #130, 04	57
D717920695	Hose assembly, #131, 04	57
D717920702	Hose assy, 06	16
D717950001	Charge relief valve kit	147
D717950057	Solenoid valve kit	147
D717950064	Orifice	147
D717950071	Gasket	147
D717950078	Shaft	147
D717950085	Gasket	147
D717950092	Cylinder block kit	147
D717950099	Bearing	147
D717950106	Coupling	147
D717950113	Ring, piston	141,155,162
D717950120	Plate, valve	141,155,162
D717950127	Shaft seal assembly	141,155,162
D717950176	Kit, cylinder block	154
D717950183	Seal, end cap	154
D717950190	Belt, v-ribbed	127,297
D717950197	Kit, rear bearing	154
D717950204	Kit, front bearing	154
D717950211	Kit, control	154
D717950218	Shaft seal	147

Please check Table of Contents for use of a part number

NUMERICAL INDEX

Part No.	Description	Page
D717950225	Charge relief valve kit	147
D717950232	A pad seal	147
D717950239	SCR plug	147
D717950246	Spring	147
D717950253	Bearing, roller	141,155,162
D717950260	Seal, lip	153
D717950267	O-ring	147
D717950274	O-ring	147
D717950281	Ball bearing	147
D717950288	Charge pump set	141,155,162
D717950295	Gasket	141,155,162
D717950302	EDC kit	141,155,162
D717950309	Multifunction valve kit	141,155,162
D717950316	Cylinder block kit	141,155,162
D717950323	Bushing	141,155,162
D717950330	Journal bearing	141,155,162
D717950337	Charge pump cover	141,155
D717950344	Charge pump cover	162
D717950351	Gasket	141,155,162
D717950358	B pad seal	147,155
D717950365	C pad seal	141
D717950372	Charge pump shaft	141,155,162
D717950379	Screen, control filter	141,155,162
D717950386	EDC kit	147
D717950393	SCR valve plug	148
D717950400	SCR valve	148
D717950407	Ring, piston	148
D717950428	Plate, valve	148
D717950435	Plate, valve	148
D717950477	Replacement filter	65,295,297
D717950540	Seal kit	161
D717950547	Charge relief valve kit	141,162
D717950554	Key	141,155,162
D717950561	O-ring	142,155,162
D717950568	O-ring	141,155,162
D717950575	O-ring	142,156,163
D717950582	O-ring	142,156,163
D717950589	O-ring	142,156,163
D717950596	O-ring	142,156
D717950603	O-ring	142,156,163
D717950610	O-ring	142,156,163
D717950624	Pin	142,156,163
D717950631	Ring, retaining	153
D717950638	Retaining ring	148,186
D717950645	Retaining ring	142,156,163
D717950659	Filter, primary air	129,296,297
D717950666	Filter, safety air	129,296,297
D717950673	Filter, fuel/separator	127,295,296,297
D717950694	Filter, oil	127,296,297
D717950701	PCP	142,156,163
D717950729	Indicator	65
D717950736	Kit, seal	65,295,297
D717950743	Kit, gland seal	49
D717950750	Kit, gland seal	52
D717950757	Kit, gland seal	50,51,73,91
D717950764	Kit, piston seal	50,51,73,91
D717950771	Kit, piston seal	49
D717950778	Set screw	77,92
D717950785	Screw	77,92
D717950792	Plug	77,92,148
D717950799	Cylinder block	77,92
D717950806	Motor housing	77,92
D717950813	Gasket	77,92
D717950827	O-ring	77,92
D717950834	Plug	77,92
D717950855	O-ring	77,92
D717950862	Valve segment	77,92

Please check Table of Contents for use of a part number

NUMERICAL INDEX

Part No.	Description	Page
D717950869	Screw adjusting assembly	77,92
D717950876	Seal carrier assembly	77,92
D717950883	Housing	77,92
D717950890	O-ring gasket seal	77,92
D717950897	Shaft	77,92
D717950904	Support pin	77,92
D717950911	Spring guide	77,92
D717950918	Bearing plate	77,92
D717950925	Gasket	77,92
D717950932	Relief valve	78,93
D717950939	Synch shaft kit	78,93
D717950946	End cap	78,93
D717950953	Plug	78,93
D717950960	Spring	78,93
D717950967	Lip seal	78,93
D717950974	Ring seal	78,93
D717950981	Orifice	78,93
D717950988	Retaining ring	78,93
D717950995	Safety cap	78,93
D717951002	Piston ring kit	78,93
D717951009	Charge relief cartridge kit	78,93
D717951016	Spool	78,93
D717951037	Nut seal	78,93
D717951044	O-ring	78,93
D717951051	O-ring	78,93
D717951058	O-ring	78,93
D717951065	O-ring	78,93,142,148,156,163,186
D717951072	O-ring	78,93,142,148,153,156,163 185
D717951079	O-ring	79,94,142,148,156,163
D717951086	Pin	79,94,142,156,163
D717951093	Plug	79,94,142,148,156,163
D717951107	Socket-head screw	79,94
D717951114	Screw	79,94
D717951121	Set screw	79,94
D717951128	Sensor	79,94
D717951135	Kit, seal	137,295,297
D717951142	Indicator	137
D717951149	Element, filter	137,295,297
D717951156	Screw	80,95
D717951163	Washer	80,95
D717951170	Plug	80,95
D717951177	Plug	80,95
D717951184	Washer	80,95
D717951191	Cover	80,95
D717951198	O-ring	80,95
D717951205	Pad	80,95
D717951212	Gear	80,95
D717951219	Reduction	80,95
D717951226	Cartridge	67
D717951233	Valve, DCV cartridge	67
D717951240	Kit, seal	67
D717951247	Coil	67
D717951317	Circlip	80,95
D717951324	Planetary	80,95
D717951331	Spacer	80,95
D717951338	Nut	80,95
D717951345	Housing and bearing	80,95
D717951352	Pin	80,95
D717951359	Seal	80,95
D717951366	Ring	80,95
D717951373	Hub	80,95
D717951380	O-ring	81,96
D717951387	O-ring	81,96
D717951394	Bearing	81,96
D717951401	Reduction	81,96
D717951408	Circlip	81,96

Please check Table of Contents for use of a part number

NUMERICAL INDEX

Part No.	Description	Page
D717951415	Spring retaining plate	81,96
D717951422	Bearing	81,96
D717951429	Ring	81,96
D717951436	Gear	81,96
D717951443	Spring	81,96
D717951450	Disc	81,96
D717951457	Spacer	81,96
D717951464	DIsc	81,96
D717951471	Disc	81,96
D717951478	Circlip	81,96
D717951485	Spring	81,96
D717951492	Pin	81,96
D717951499	Disc	81,96
D717951506	Disc	81,96
D717951513	O-ring	82,97
D717951520	Spacer	82,97
D717951527	O-ring	82,97
D717951534	O-ring	82,97
D717951541	Piston	82,97
D717951548	Spring	82,97
D717951555	Circlip	82,97
D717951562	Spacer	82,97
D717951569	O-ring	82,97
D717951576	O-ring	82,97
D717951583	Thrust washer	82,97
D717951590	Bearing	82,97
D717951597	Piston	82,97
D717951604	Spring	82,97
D717951611	Adapter	82,97
D717951618	Screw	82,97
D717951625	O-ring	82,97
D717951632	Screw	82,97
D717951639	Kit, piston seal	52
D717951646	Cooler, oil with bypass	125
D717951653	Radiator	125
D717951660	Cooler, charge air	125
D717951667	Valve, bypass	125
D717951674	Left flight kit	227,251
D717951681	Right flight kit	228,252
D717951926	Service tool	289,290
D717951933	Cap, brass	261
D717951940	Tip, spraying	261
D717951975	Filter, fuel	127,295,296,297
D717951989	Emergency hose kit	289,291,292,293,294
D717951996	Hose, 04	291
D717952003	Adapter, 04	291
D717952010	Adapter, 04	291
D717952017	Adapter, 04	291
D717952024	Adapter, 04	291
D717952031	Hose, 06	291
D717952038	Hose, 06	291
D717952045	Adapter, 06	291
D717952052	Adapter, 06	291
D717952059	Adapter, 12	291
D717952066	Hose, 08	291
D717952073	Adapter, 08	291
D717952080	Adapter, 08	291
D717952087	Adapter, 08	292
D717952094	Hose, 10	292
D717952101	Hose, 10	292
D717952108	Adapter, 10	292
D717952115	Adapter, 10	292
D717952122	Adapter, 10	292
D717952129	Hose, 12	292
D717952136	Hose, 12	292
D717952143	Hose, 12	292
D717952150	Adapter, 12	292

Please check Table of Contents for use of a part number

NUMERICAL INDEX

Part No.	Description	Page
D717952157	Adapter, 12	292
D717952164	Adapter, 12	292
D717952171	Adapter, 12	292
D717952178	Hose, 16	292
D717952185	Hose, 16	292
D717952192	Hose, 16	292
D717952199	Adapter, 16	292
D717952206	Adapter, 16	292
D717952213	Adapter, 16	292
D717952220	Adapter, 16	293
D717952227	Adapter, 16	293
D717952234	Adapter, 16	293
D717952241	Adapter, 32	293
D717952248	Fuel hose, 3/8"	293
D717952255	Wrench set	293
D717952269	Large bin	293
D717952276	Small bin	293
D717952283	First-aid kit	293
D717952290	O-ring kit	293
D717952297	Split-flange o-ring kit	293
D717952304	100 hr start-up kit	289,295
D717952311	500 hr maintenance kit	289,296
D717952318	1000 hr maintenance kit	289,297
D717952325	Hopper skirt kit	39,44
D717952332	Conveyor drive chain kit	26,33
D717952339	Conveyor chain kit	26,34
D717952346	Conveyor guide kit	26,35
D717952353	Wear plate kit	36
D717952360	Conveyor sprocket kit	37
D717952367	Hose kit case	293
D717952374	Driveshaft key	33
D717952381	Alternator	127
D717952388	Motor, starter	127
D717952395	Head, oil filter	127
D717952402	Tube, fuel supply	127
D717952409	Tube, fuel supply	127
D717952416	Hose, flexible	127
D717952423	Hose, flexible	127
D717952430	Tensioner, idler	127
D717952437	Head, fuel separator	127
D717952444	Hose, flexible	127
D717952451	Module, fuel	127
D717952458	Screed disconnect kit	266,275,279,288
D717952465	Screed disconnect jumper	275,288
D717952472	Emergency kit decal	293
D717952479	Hydraulic wrench	293
D717952486	Tote, 4x6	293
D717952493	Tote, 16x10	293
D717952507	Pivot post	271,284
D717952514	Gusset	271,284
D717952521	Tube	271,284
D717952528	Stop collar	271,284
D717952542	Smoothtrac label	271,284
D717952549	SAS beam kit	271,272,284,285
D717952556	Hangar casting	271,284
D717952563	Installation manual	271,284
D717952570	Cable	271,284
D717952577	L bracket	271,284
D717952591	Cap-4	293
D717952598	Cap-6	293
D717952605	Cap-8	293
D717952612	Cap-10	294
D717952619	Cap-12	294
D717952626	Cap-16	294
D717952633	Cap-24	294
D717952640	Cap-32	294
D717952647	Plug-4	294

Please check Table of Contents for use of a part number

NUMERICAL INDEX

Part No.	Description	Page
D717952654	Plug-6	294
D717952661	Plug-8	294
D717952668	Plug-10	294
D717952675	Plug-12	294
D717952682	Plug-16	294
D717952689	Plug-24	294
D717952696	Plug-32	294
D717952724	Spring	148
D717952731	Retainer guide	148
D717952738	Plug	148
D717952745	ECD link	148
D717952752	Purchased parts	148
D717952759	Purchased parts	148
D717952766	Swash plate	148
D717952773	Flange cover	148
D717952780	Housing	149
D717952787	Flange housing	149
D717952794	Lip seal	149
D717952801	Slider block	149
D717952808	Shaft tooth	149
D717952815	Washer	149
D717952822	Washer	149
D717952829	Slipper retainer	149
D717952836	Pin	149
D717952857	Plug, 1	67
D717952892	Spring	142,156,163
D717952913	Screw	149
D717952920	Screw	149
D717952927	Spacer	79,94
D717952934	Retaining ring	79,94
D717952941	Screw	149
D717952948	Nut	79,94
D717952955	Servo piston assembly	79,94
D717952962	Screw	149
D717952976	Side cover insert	142,156,163
D717952983	Retaining plate	142,156,163
D717952990	Retaining plate	142,156,163
D717952997	Spring seat	143,156,163
D717953004	Bearing	143,157,163
D717953011	Socket screw	143,157
D717953018	Servo arm	143,157,164
D717953025	Screw	143,157,164
D717953032	Lip seal	143,157,164
D717953067	Piston	143,157,164
D717953074	Screw	149
D717953088	Swash plate bearing kit	149
D717953095	Hold-down pin	149,153
D717953102	Screw	143,157,164
D717953109	Plug	143,157,164
D717953123	Screw	149
D717953130	Retaining ring	149
D717953137	Pin	149
D717953284	Guide post	143,157,164
D717953291	Feedback link	143,157,164
D717953305	Slipper guide	143,157,164
D717953319	Spring seat	143,157,164
D717953326	Spring retainer	143,157,164
D717953333	Spline shaft	143,157,164
D717953340	Coupling	157
D717953347	Slipper guide bearing	143,157,164
D717953354	Cage locator link	143,157,164
D717953361	End cap	143,157,164
D717953368	Spacer	143,157,164
D717953375	Flange adapter	158
D717953382	Flange adapter	144
D717953389	Swash plate	144,158,164
D717953410	Spring	144,158,164

Please check Table of Contents for use of a part number

NUMERICAL INDEX

Part No.	Description	Page
D717953431	Piston ring	144,158,164
D717953438	Check valve	144,158,165
D717953452	Lifting bracket spacers	144,158,165
D717953459	Lifting bracket	144,158,165,186
D717953473	Flange cover	158
D717953480	Flange cover	144
D717953494	Coupling	144
D717953501	Shim	144,158,165
D717953508	Pin	144,158,165
D717953515	Spring retainer	144,158,165
D717953522	Variable swash plate	144,158,165
D717953529	Side cover	144,158,165
D717953536	Variable housing	144,158,165
D717953543	O-ring	150
D717953550	Coil kit	150
D717953557	Bearing housing	79,94
D717953564	Lock ring	150
D717953578	Locking plate	150
D717953585	Spring	144,158,165
D717953599	Servo piston	150
D717953606	Piston kit	150
D717953613	Cylinder block	144,158,165
D717953620	Solenoid valve	79,94
D717953627	Center section	150
D717953634	Lifting bracket	150
D717953641	Servo piston	144,158,165
D717953648	Leveler	144,158,165
D717953669	Servo cylinder	145,158,165
D717953683	Servo cylinder	150
D717953690	PVHC	67
D717953697	Slider block	145,159,165
D717953711	HIC, rear valve	67
D717953739	Anti-cav valve	67
D717953746	PVSI	67
D717953753	Shock valve	67
D717953760	PVM	67
D717953767	PVB	67
D717953774	PVSPM	67
D717953781	Tie rod assembly	67
D717953788	Spool	67
D717953858	Control orifice kit	145,159,165
D717953865	Seal overhaul kit	146,160,167
D717953872	Charge relief kit	159
D717953886	Nut	145,159,165
D717953907	O-ring	165
D717953928	O-ring	145,159,165
D717953935	O-ring	159
D717953942	O-ring	150
D717953949	O-ring	145,159,166
D717953956	O-ring	145,159,166
D717953963	O-ring	150
D717953970	O-ring	145,150,152,159,166
D717953977	O-ring	145,159,166
D717953984	Slotted pin	150,153
D717953998	Spiral pin	145,159,166
D717954005	Plug	145,159,166
D717954012	Plug	150,152
D717954019	Plug	145,159,166
D717954026	Plug	145,159,166
D717954033	Backup ring	150
D717954040	Retaining ring	150
D717954047	Retaining ring	145,159,166
D717954061	Screw	145,159
D717954068	Screw	145,159,166
D717954075	Screw	145,159,166
D717954089	Screw	166
D717954103	Screw	145,159,166

Please check Table of Contents for use of a part number

NUMERICAL INDEX

Part No.	Description	Page
D717954110	Screw, metric	145,160,166
D717954117	Screw	146,160,166
D717954124	Screw	146,160,166
D717954138	Socket-head screw	79,94
D717954152	Screw	146,160,166
D717954159	Washer	146,160,166
D717954166	Washer	146,160,166
D717954194	Pilot	67
D717954215	Adapter assembly	186
D717954222	Adjusting plug, LS	152
D717954229	Adjusting plug, PC	152
D717954236	Ball bearing	186
D717954243	Bias spring	152
D717954250	Check valve poppet	152
D717954257	Cylinder block	153
D717954264	Cylinder block kit with speed ring	186
D717954271	Cylinder block spring	185
D717954278	Cylinder block spring retainer	185
D717954285	End cap	186
D717954292	Radial end cap	153
D717954299	Fixed housing	186
D717954306	End cap gasket	185
D717954313	Hold-down pin retainer	185
D717954320	2-bolt B-flange housing	153
D717954327	Inner spring, LS	152
D717954334	Inner spring, PC	152
D717954341	Lifting bracket	153
D717954348	Lip seal	185
D717954362	O-ring	153
D717954369	Outer spring, LS	152
D717954376	Outer spring, PC	152
D717954383	Overhaul seal kit	186
D717954390	Overhaul seal kit	154
D717954397	Piston assembly	153
D717954404	Piston	185
D717954411	Shaft retainer	152
D717954418	Retaining ring	152
D717954425	Retaining ring	185
D717954432	Retaining spring	185
D717954435	Needle bearing	186
D717954439	Seal ring	153
D717954446	Screw	186
D717954453	Screw	153
D717954458	Spool	152
D717954460	Screw	153
D717954467	Screw	153
D717954474	Servo piston assembly	154
D717954481	Set screw	152
D717954488	Shaft	185
D717954495	15-tooth spline shaft	153
D717954502	Hold-down pin slipper	185
D717954509	Slipper retainer	153
D717954516	Slipper retainer	185
D717954523	Slipper retainer guide	153
D717954530	Slipper retainer guide	185
D717954537	Slotted pin	186
D717954544	Plug	153,185
D717954551	Speed sensor	186
D717954565	Spring	152
D717954572	Spring guide, LS	152
D717954579	Spring guide, PC	152
D717954586	Spring pin	185
D717954593	Support washer	185
D717954600	Swash plate	152
D717954607	Swashplate bearing kit	154
D717954614	Thrust plate	185
D717954621	Thrust washer	185

Please check Table of Contents for use of a part number

NUMERICAL INDEX

Part No.	Description	Page
D717954628	Valve plate	186
D717954635	CCW valve plate	152
D717954642	Washer	185
D717954656	Seal overhaul kit	150
D717982535	SAS mount	271,284
D722180000	Auger	210,211,212,234,235,236
D722180900	Support, distributor	211,235
D722181600	Auger	211,214,215,235,238,239
D722181611	Bearing	214,238
D722181636	Auger, left	214,238
D722181643	Auger	214,238
D722181900	Auger, left, 290mm	223,247
D722182000	Auger, right, 290mm	223,247
D722182100	Auger, left, 434mm	224,229,248,253
D722182200	Auger, right, 434mm	224,229,248,253
D722182300	Auger, left, 868mm	225,229,249,253
D722182400	Auger, right, 868mm	225,229,249,253
D722182711	Wear part, left	211,227,235,251
D722182811	Wear part, right	211,228,235,252
D722183400	Engine support	211,219,235,243
D722183403	Gear bearing, left	219,243
D722183411	Gear bearing, right	219,243
D754111500	Auger grease pipelines	211,213,235,237
D754180506	Lube pipe	213,237
D754180516	Lube pipe	213,237
D756061106	Housing	216,240
D756061136	Drive sleeve	216,240
D756183201	Outer housing	216,240
D756183218	Hub	216,240
D756183300	Auger gear	211,216,217,218,235,240,241 242
D756183315	Housing cover	216,240
D756183419	Profile sleeve	219,243
D772181750	Bushing	214,238
D880180062	Clamp	211,235
D880180063	Washer	212,236
D880180413	Cover	216,240
D880180419	Seal ring	216,240
D880180421	Distance washer	219,243
D880180422	Distance washer	219,243
D880180423	Distance washer	219,243
D880180480	Shim	217,241
D880180481	Shim	217,241
D880180482	Shim	217,241
D880180483	Shim	217,241
D880180749	Shaft	214,238
D880180754	Ring, VB500 screed	214,238
D880180768	Ring	214,238
D880180772	Support	214,238
D930206202	Ring, nilos	216,240
D930435011	Upsetting ring	217,241
D930452560	Screw	217,241
D932100729	Shim	214,238
D932100730	Shim	214,238
D932100732	Shim	215,239
D932101171	Shim	217,241
D932101172	Shim	217,241
D932101174	Shim	217,241
D932101176	Shim	217,241
D932101327	Shim	217,241
D932101328	Shim	217,241
D932101330	Shim	217,241
D932101332	Shim	217,241
D932211662	O-ring	216,240
D932211691	O-ring	214,238
D932211701	O-ring	214,238
D932211745	O-ring	219,243

Please check Table of Contents for use of a part number

NUMERICAL INDEX

Part No.	Description	Page
D932211813	O-ring	216,240
D935022420	Thrust ball bearing	214,238
D935128427	Inner ring	214,238
D935183934	Bearing, axial needle	214,238
D935194411	Bearing, needle	214,238
D935194413	Bearing, needle	214,238
D935229705	Taper, roll bearing	216,240
D935229706	Bearing	216,240
D935511210	Grease nipple	214,238
D935513220	Nipple, grease	213,237
D936032392	Circlip	216,240
D936630040	Ring, oil seal	216,240
D936780017	Lock plate	211,235
D937634274	Screw, F30	211,227,228,235,251,252
D937860060	Screw	215,216,239,240
D937860264	Screw	216,240
D937890151	Screw	217,241
D937976545	Pin, threaded	214,216,238,240
D938151084	Screw	211,235
D938165873	Screw	211,235
D938330758	Screw	219,243
D938481615	Nut	217,241
D938690604	Pin	215,239
D951260300	Ring gear and pinion	217,241
D956053123	Decal, dynapac white	202
D960969150	Hose	213,237
D960993190	Extension	213,237
D961134205	Screw	213,237
D961936205	Angle socket	213,237
D966057210	Motor, Hydr	219,243

Please check Table of Contents for use of a part number

ALPHABETICAL INDEX

Description	Part Number	Page
100 hr start-up kit	D717952304	295
1000 hr maintenance kit	D717952318	297
500 hr maintenance kit	D717952311	296
AC main panel	D717104500	190
Aftermarket Kits	AFTERMARKET KIT	289
Assembly, hub, idler wheel	D717170622	76
Assembly, radiator shroud	D717085048	114
Auger	D717180000	210
Auger	D717180001	207
Auger	D722180000	211
Auger	D722181600	214
Auger & conveyor controls, moba	D717102000	195
Auger Extensions, 11.4"	D717903008	223
Auger Extensions, 17"	D717903015	224
Auger extensions, 34.1"	D717903022	225
Auger gear	D756183300	216
Auger grease pipelines	D754111500	213
Auger lift cylinder	D717091001	49
Auger lubrication	4812200217	222
Auger splash, left	D717180010	220
Auxiliary power panel	D717905000	197
Bogie assembly	D717170544	74
Bogie, spindle	D717170545	75
Bracket assembly, hydraulik tank	D717083000	120
Carlson screed	D626000000	264
Case drain manifold	D717085027	126
Conveyor	D717060000	25
Conveyor chain	D717061500	31
Conveyor chain kit	D717952339	34
Conveyor drive	D717061000	27
Conveyor drive chain kit	D717952332	33
Conveyor guide kit	D717952346	35
Conveyor Lubrication	D717064500	32
Conveyor sprocket kit	D717952360	37
Cooler, water-oil-air	D717085004	125
Cylinder, hopper pivot	D717091501	52
Cylinder, screed level, front	D717091503	50
Cylinder, screed lift, rear	D717091502	51
DC control panel	D717104000	187
Drive, conveyor	D717061018	29
Easy IV screed assembly	4812200294	267
Emergency hose kit	D717951989	291
Engine assembly	4812200124	127
Engine controls	D717101000	192
Engine frame	D717081000	133
Engine support	D722183400	219
F1000T manual kit	D717410031	299
F1000W manual kit	D716410031	298
Footwell, platform	D717110500	104
Frame, main	D717010500	7
Front conveyor cover	D717013000	15
Fuel tank	D717083500	169
Fume extractor	D717010000	3
Fume extractor	D717012500	13
Gearbox, track drive	D717170600	80
Generator drive	D717100000	173
Generator drive	D717100500	184
Guide pole	D717011500	14
Hand rail	4812221633	115
Hood frame	D717111500	106
Hopper assembly, left side, 10 ft.	D717070500	40
Hopper assembly, right side, 10 ft.	D717070000	39
Hopper assembly, right side, 10 ft.	D717071000	42
Hopper skirt kit	D717952325	44
Hose kit, auger	4812200063	55
Hose kit, conveyor	4812200065	56
Hose kit, hydraulic, 10' tracked paver	D717090001	53

Please check Table of Contents for use of a part number

ALPHABETICAL INDEX

Description	Part Number	Page
Hose kit, lube	4812200067	57
Hose kit, miscellaneous	4812200068	58
Hose kit, propel	4812200069	59
Hose kit, vibration	4812200071	61
Hose kit, work	4812200072	62
Hose kit, work	4812200073	63
Hose retention	D717091018	221
Hydraulic assembly	D717090000	45
Hydraulic filter	D717084544	137
Hydraulic tank	D717084500	135
Installation decal	D717410000	201
Installation, air cleaner	D717082000	128
Installation, water-oil-air cooler	D717085000	121
Key replacement kit	4812222082	199
Left flight kit	D717951674	227
Lighting system	D717105500	196
MOBA-matic Leveling System	4812200264	273
Motor and gear box	D717061009	28
Motor track assy	D717171014	77
Motor, hydraulic	D717100506	185
Muffler, 10` drive complete	D717080000	117
Muffler, 10` drive complete	D717081500	130
Muffler, hood mount, bottom	D717081501	132
Non contacting SAS	D717901501	270
Operator console lh	D717103000	176
Operator console rh	D717103500	180
Operator station, left	D717113000	101
Operator station, right	D717113500	109
Platform	D717110000	99
Pressure filter	D717091002	65
Pump drive	D717190000	139
Pump, auger tandem	D717192500	147
Pump, conveyor / work	D717194500	152
Pump, generator	D717193500	155
Pump, propel front	D717191000	141
Pump, propel rear	D717191500	162
Pump, vibration	D717193001	161
Push roller crosshead, 10'	4812221160	17
Push roller crosshead, 8'	D717011000	19
Rear work function	4812221105	66
Right flight kit	D717951681	228
Roading lights	D717906000	255
Roller	D717011005	18
SAS beam kit	D717952549	272
Screed arm	D717040000	21
Screed disconnect kit	D717952458	275
Screed leveling guide	D717172001	84
Screed sensor	D626000001	263
Screed sensor	D717000000	1
Service tool	D717951926	290
Side moulding	D717114000	112
Slope arm	D717040518	23
Sonic averaging	D717901505	271
Spray wand	D717909503	261
Tension assembly	D717060501	30
Topcon leveling control	D717102501	268
Track	D717170000	69
Track left	D717170500	85
Track right	D717171000	70
Track tension cylinder	D717170639	73
Truck hitch	D717900500	16
Tunnel extensions kit	D717903500	226
Umbrella	D717904500	103
Valve bank, rear work function	D717091507	67
Warning beacon	D717906500	257
Wash down	D717909500	259
Wear plate kit	D717952353	36

Please check Table of Contents for use of a part number

ALPHABETICAL INDEX

Description	Part Number	Page
Wide-width paving kit	4812222659	229

Please check Table of Contents for use of a part number

PARTS ALPHABETICAL INDEX

Description	Part Number	Page
15-tooth spline shaft	D717954495	153
2-bolt B-flange housing	D717954320	153
A pad seal	D717950232	147
AC box mount	D717010634	11
AC main panel plate	D717104513	11
Accumulator, Track tension circuit	D717090502	45
Adapter	4700338304	5
Adapter	D717083532	118,169
Adapter	D717951611	82,97
Adapter assembly	D717954215	186
Adapter, 04	D717952003	291
Adapter, 04	D717952010	291
Adapter, 04	D717952017	291
Adapter, 04	D717952024	291
Adapter, 04-02	4812221681	13
Adapter, 04-04	D717800246	66
Adapter, 04-12	4812200114	54
Adapter, 06	D717952045	291
Adapter, 06	D717952052	291
Adapter, 06-04	4812200129	54
Adapter, 06-04	D717800281	66
Adapter, 06-06	4812200128	54
Adapter, 06-06	D717800323	66,208,223,224 225,232,247,248 249
Adapter, 08	D717952073	291
Adapter, 08	D717952080	291
Adapter, 08	D717952087	292
Adapter, 1.5"	D717084555	136
Adapter, 1/2"-32	D717802038	135
Adapter, 1/4"-1/8"	4812221652	13
Adapter, 10	D717952108	292
Adapter, 10	D717952115	292
Adapter, 10	D717952122	292
Adapter, 10-10	4812200080	53
Adapter, 10-10	D717800057	66
Adapter, 10-18	4812200084	53
Adapter, 10-18	4812200101	53
Adapter, 1-16	D717083541	170
Adapter, 12	D717952059	291
Adapter, 12	D717952150	292
Adapter, 12	D717952157	292
Adapter, 12	D717952164	292
Adapter, 12	D717952171	292
Adapter, 12-12	4812200074	53,171
Adapter, 12-12	D717800066	126
Adapter, 12-16	D717802689	208,223,224,225 232,247,248,249
Adapter, 12-3/4"	D717801961	208,232
Adapter, 16	D717952199	292
Adapter, 16	D717952206	292
Adapter, 16	D717952213	292
Adapter, 16	D717952220	293
Adapter, 16	D717952227	293
Adapter, 16	D717952234	293
Adapter, 16-12	4812200194	208,232
Adapter, 16-16	4812200054	53,66,291
Adapter, 16-16	4812200117	171
Adapter, 16-16	D717800218	66,135
Adapter, 2"-3/4"	4812221548	171
Adapter, 20-12	D717800001	47
Adapter, 24-24	D717801975	135
Adapter, 32	D717952241	293
Adapter, 32-32	D717801548	121
Adapter, bulkhead	4812200233	222,246
Adapter, flywheel flexplate	D717190005	139
Adapter, M10-10	4812221348	140

Please check Table of Contents for use of a part number

PARTS ALPHABETICAL INDEX

Description	Part Number	Page
Adapter, M10-M22	D717801905	119
Adapter, male-male	4812200224	222,246
Adapter, pump drive housing	D717190004	139
Adapter, straight	D717801919	136
Adjustable swing arm	4812200273	273,286
Adjusting plug, LS	D717954222	152
Adjusting plug, PC	D717954229	152
Air cleaner	D717082001	128
Air cleaner mounting band	4812200319	129
Air vent hose	4812221543	171
Air vent hose	4812221559	58,171
Alarm 24V, reverse indication	D717101508	173
Alarm, electric	D717103035	178,182,183
Alternator	D717952381	127
Angle socket	D961936205	213,237
Angle, radiator mount	D717085019	122
Anti slip tape	D717410016	201
Anti slip tape	D717410017	201
Anti slip tape	D717410018	201
Anti slip tape	D717410019	201
Anti slip tape	D717410020	201
Anti slip tape	D717410021	201
Anti-cav valve	D717953739	67
Arm bracket cover	D717172007	84
Arm retainer	D717172002	84
Asphalt guard plate	D717180029	220,244
Auger	D722181643	214,238
Auger grease hose	4812200216	222,246
Auger hose bracket	D717091019	221,245
Auger hose routing plate	D717010640	11
Auger lift cylinder anchor	D717010510	8
Auger slide bushing	D717180003	207,231
Auger splash plate, left	D717180012	220,244
Auger splash, right	D717180009	207,231
Auger, left	D722181636	214,238
Auger, left, 290mm	D722181900	223,247
Auger, left, 434mm	D722182100	224,229,248,253
Auger, left, 868mm	D722182300	225,229,249,253
Auger, right, 290mm	D722182000	223,247
Auger, right, 434mm	D722182200	224,229,248,253
Auger, right, 868mm	D722182400	225,229,249,253
B pad seal	D717950358	147,155
Backup ring	D717954033	150
Ball bearing	D717040509	21
Ball bearing	D717950281	147
Ball bearing	D717954236	186
Ball valve	4812220182	46
Ball Valve	D717080023	136
Ball valve mount bracket	4812200149	5
Bar	D717010543	7
Bar	D717010544	7
Bar, solid neutral	D717104517	191
Barrier block	D717103025	177,181
Barrier block	D717104037	188
Base, latch relay	D717104007	187
Battery	D717101001	192
Battery box bracket	D717010644	11
Beaded hose barb	D717909519	259
Bearing	4700116037	216,240
Bearing	D717950099	147
Bearing	D717951394	81,96
Bearing	D717951422	81,96
Bearing	D717951590	82,97
Bearing	D717953004	143,157,163
Bearing	D722181611	214,238
Bearing	D935229706	216,240
Bearing bolt	D717011007	17,19

Please check Table of Contents for use of a part number

PARTS ALPHABETICAL INDEX

Description	Part Number	Page
Bearing housing	D717953557	79,94
Bearing plate	D717950918	77,92
Bearing, axial needle	D935183934	214,238
Bearing, conveyor drive end	D717061004	29,37
Bearing, conveyor drive middle	D717061003	29,37
Bearing, needle	D935194411	214,238
Bearing, needle	D935194413	214,238
Bearing, operator swing arm	D717113047	101,102,109,110
Bearing, push roller	D717011014	18,20
Bearing, roller	D717950253	141,155,162
Bearing, shaft	D717060504	30,37
Belt, v-ribbed	D717950190	127,297
Bias spring	D717954243	152
Block	D717010563	7
Block terminal, 2-wire	D717104029	187
Block, grease main frame	4812220843	12
Blower fume extractor	D717012501	13
Body, 16-16	D717802654	207,223,224,225 231,247,248,249
Bogie pin	D717170584	71,86
Bogie spindle	D717170599	75,89
Bogie spindle plate	D717170546	75,89
Bolt adjuster, inner	D717060512	30
Bolt adjuster, outer	D717060511	30
Bonded drive wheel	D717171010	71,85
Bonded idler wheel	D717170557	70,85
Bonded roller wheel	D717170558	74,88
Box	D717104506	190
Box, controller single side base	D717102504	268,281
Bracket, ac main panel	D717104512	173
Bracket, battery switch, fuse	D717104009	192
Bracket, cooler upper	D717085011	121
Bracket, front light	D717105501	196
Bracket, hood latch	D717011509	3
Bracket, l-arm long fin	D717102517	268,281
Bracket, left side door assy	D717110011	99
Bracket, right side door assy	D717110009	99
Bracket, sensor connector	D717110014	100
Bracket, short, tom arm mount	D717102516	268,281
Bracket, sonic sensor	D717102005	195,269,282
Bracket, sonic tracker	D717102510	268,281
Bracket, tail lights	D717906009	255
Breaker main	D717104503	190
Breaker main, 15A	D717104511	190
Breather holder spacer	4812222127	171
Breather vent	4812221537	171
Bulb 24V, dash board light	D717103020	177,181
Bulb, amber	D717906006	255
Bulk head	4812221372	5
Bulkhead fitting, 04	D717091026	46
Bulkhead fitting, 08	D717091027	46
Bulkhead fitting, 12	D717091028	46
Bumper	D717010529	8
Bumper guide standoff	D717010604	10
Bushing	D717170583	70,85
Bushing	D717950323	141,155,162
Bushing	D772181750	214,238
Bushing, bogie	D717170547	74,88
Bushing, bolt	D717180004	207,231
Bushing, tensioner	D717170570	70,85
C pad seal	D717950365	141
Cable	D717952570	271,284
Cable 15', controller-tractor	D717102004	195,269,282
Cable, altern. NEG term to engine ground stud	D717101039	174
Cable, battery disc sw to F1 fuse	D717101032	193
Cable, battery disc sw to F2 fuse	D717101033	193
Cable, battery disc sw to F4 fuse	D717101034	194

Please check Table of Contents for use of a part number

PARTS ALPHABETICAL INDEX

Description	Part Number	Page
Cable, battery, NEG term to X 9	D717101040	174
Cable, battery, pos term to bat disc sw	D717101030	193
Cable, battery, pos term to neg term	D717101029	193
Cable, controller paver	D717102508	268,281
Cable, F1 fuse to F3 fuse	D717101035	194
Cable, F1 fuse to R1 (starter relay) contact	D717101038	194
Cable, F3 fuse to X8	D717101036	194
Cable, F7 fuse to R1 starter relay	D717101052	194
Cable, generator to mainframe	D717101055	174
Cable, pivot release	D717113025	176,181
Cable, slope system	D717102514	268,281
Cable, slope system	D717102515	268,281
Cable, starter NEG term to chassis ground	D717101031	174
Cage locator link	D717953354	143,157,164
Cap screw, 1/2"	4812200051	14
Cap screw, 3/4"	4812220161	263,267,275,280 288
Cap screw, M12	4700500194	219,243
Cap screw, M6	4700500040	216,240
Cap screw, M8	4700508019	217,241
Cap, brass	D717951933	261
Cap, shaft end	D717061025	29,37
Cap, tank fill	D717084538	135
Cap-10	D717952612	294
Cap-12	D717952619	294
Cap-16	D717952626	294
Cap-24	D717952633	294
Cap-32	D717952640	294
Cap-4	D717952591	293
Cap-6	D717952598	293
Cap-8	D717952605	293
Capscrew, M6	4700500012	184
Carlson Screed EZIV 10' Manual, Letter	D717410087	298,299
Carslon EZ-IV screed assembly	4812200293	267,280
Cartridge	D717951226	67
Case	4812200275	273,286
Case	D717102507	268,281
Case	D717901503	270,283
Case drain manifold	D717085028	126
Castle nut, 1 1/4"	D717170602	70,74,85,88
Catch	D717110016	113
CCW valve plate	D717954635	152
Center floor support	D717010001	3
Center section	D717953627	150
Center weldment mount	D717010637	11
Centerer, muffler	D717081519	132
Chain	D717061501	31,34
Chain connecting link	D717011522	14
Chain mount	4812222611	16
Chain slide mount	D717010574	8
Chain, guide pole	D717011523	14
Charge pump cover	D717950337	141,155
Charge pump cover	D717950344	162
Charge pump set	D717950288	141,155,162
Charge pump shaft	D717950372	141,155,162
Charge relief cartridge kit	D717951009	78,93
Charge relief kit	D717953872	159
Charge relief valve kit	D717950001	147
Charge relief valve kit	D717950225	147
Charge relief valve kit	D717950547	141,162
Check valve	4812220181	46
Check valve	D717953438	144,158,165
Check valve poppet	D717954250	152
Circlip	D717951317	80,95
Circlip	D717951408	81,96
Circlip	D717951478	81,96
Circlip	D717951555	82,97

Please check Table of Contents for use of a part number

PARTS ALPHABETICAL INDEX

Description	Part Number	Page
Circlip	D936032392	216,240
Circuit breaker	D717104504	190
Circuit breaker, 1 pole	D717905001	197
Circuit breaker, 2 pole	D717905002	197
Clamp	4700921050	171
Clamp	D717080011	118
Clamp	D717081531	130
Clamp	D717081532	130
Clamp	D717081534	130
Clamp	D717085060	122
Clamp	D717085061	122
Clamp	D717903515	226,230,250,254
Clamp	D880180062	211,235
Clamp assembly, case drain	4812220193	119
Clamp, 2.5"	D717080022	119
Clamp, 3/4"	D717906010	255
Clamp, 4 1/2"	D717082009	128
Clamp, 5 1/2"	D717082008	128
Clamp, 5"	D717082013	129
Clamp, accumulator mounting	D717093506	45
Clamp, cushioned	D717801422	179
Clamp, hose	D717085052	122
Clamp, hose	D717091021	13,221,245
Clamp, left extension	D717903514	226,230,250,254
Clamp, right extension	D717903511	226,230,250,254
Clamp, stauff	D717064507	32
Clamp, stauff	D717064508	32
Clamp, twin stauff	D717080006	117
Clamp, worm drive	D717909516	170,259
Clamping bar	4812200195	207,231
Clamping u-bolt	D717081529	130
Clip hold down, control relay	D717104012	189
Clip hold down, latch relay	D717104013	189
Clip, Grating tie down	D717110006	99
CLS3-II controller	4812200274	273,286
Coil	D717951247	67
Coil cable, auger sensor	D717102012	195,269,282
Coil cable, conveyor sensor	D717102003	195,269,282
Coil cord 15ft, sonic tracker-controller	D717102513	268,281
Coil kit	D717953550	150
Coiled cable	4812200266	273,286
Coiled cable	4812200267	273,286
Conduit hub	4812200227	13
Conduit hub	4812200229	184
Conduit, 1/2"	4812200313	256
Conduit, 1/2"	4812200315	256
Connection cable	4812200277	273,286
Connector, straight	D717064512	32
Console cover	D717113051	178,182
Console support bar	D717010636	11
Console support tube	D717010554	7
Contactor, 18A	D717104507	190
Control orifice kit	D717953858	145,159,165
Controller bracket	4812222564	268,281
Controller mounting assembly	4812200271	273,286
Controller, feed system	D717102001	266,279
Controller, propel handle	D717101501	176,180
Controller, propel system	D717101506	187
Controller, speed dial	D717101502	176,180
Controller, steering calibration	D717101503	176,180
Conversion adapter	D717085090	170
Conveyor bearing clamp	D717010585	9
Conveyor cover mount	D717013003	15
Conveyor cover mount	D717013010	15
Conveyor crossbar	D717061502	31,34
Conveyor crossmember	D717010595	9
Conveyor drive cover	D717061005	27,36

Please check Table of Contents for use of a part number

PARTS ALPHABETICAL INDEX

Description	Part Number	Page
Conveyor guard	D717011529	3
Conveyor mount plate	D717010539	8
Conveyor tension bracket	D717010590	8
Cooler, charge air	D717951660	125
Cooler, oil with bypass	D717951646	125
Cord grip	D717104519	191
Cotter pin, 0.25"	D717801359	17,19
Cotter pin, 3/16"	D717801226	70,74,85,88
Coupling	4812200318	261
Coupling	D717902668	223,247
Coupling	D717950106	147
Coupling	D717953340	157
Coupling	D717953494	144
Coupling, 1/4"	D717909515	260
Coupling, 35mm	D717100502	184
Coupling, anchor	D717909517	259
Coupling, female, 08-10	D717802668	208,224,225,232 248,249
Coupling, male, 08-10	D717802675	208,223,224,225 232,247,248,249
Coupling, pipe	D717064504	32
Coupling, spider	4812200086	184
Coupling, splined	4812200085	184
Cover	D717083510	169
Cover	D717111531	108
Cover	D717951191	80,95
Cover	D880180413	216,240
Cover, generator access hole	D717010571	4
Cover, Inspection	D717011504	3
Cover, swing arm	D717113024	177,181
Cover, upper inspection	D717011505	3
C-rail	D717010642	11
C-rail	D717010645	11
C-rail	D717010646	11
Crossbar, battery tie down	D717101009	192
Crosshead	4812221161	17
Crossmember	D717010548	7
Crossmember	D717010550	7
Crossmember	D717010584	7
Cummins CD and Parts Manual, Letter	D717410073	298,299
Cummins Operator and Maint Manual, Letter	D717410080	298,299
Cushioned clamp, 1.5"	D717801520	178,182
Cylinder block	D717950799	77,92
Cylinder block	D717953613	144,158,165
Cylinder block	D717954257	153
Cylinder block kit	D717950092	147
Cylinder block kit	D717950316	141,155,162
Cylinder block kit with speed ring	D717954264	186
Cylinder block spring	D717954271	185
Cylinder block spring retainer	D717954278	185
Data link cable	4812220468	290
Decal	4700281898	202
Decal	4700382751	201
Decal	4700904835	202
Decal	4700991658	201
Decal, AC main panel	D717410029	191
Decal, auxiliary power panel	D717905008	197
Decal, battery disconnect	D717410014	193
Decal, console lh, lower right	D717410008	177
Decal, console lh, upper left	D717410006	177,181
Decal, console lh, upper right	D717410009	177
Decal, console rh, lower right	D717410012	181
Decal, console rh, upper right	D717410011	181
Decal, crush area	4700903422	201
Decal, dc control panel	D717410013	187
Decal, dynapac white	D956053123	202
Decal, F1000T	D717410136	202

Please check Table of Contents for use of a part number

PARTS ALPHABETICAL INDEX

Description	Part Number	Page
Decal, fuse holder	D717410024	194
Decal, fuse holder	D717410025	194
Decal, fuse list	D717410022	189
Decal, hand crush	4812220093	202
Decal, high voltage	4812220097	202
Decal, left console, lower left	D717410007	177
Decal, left rear sensor plugs	D717410028	201
Decal, lift point	4700357587	201
Decal, right console, lower left	D717410010	181
Decal, right rear sensor plugs	D717410027	201
Decal, safety	4700903423	201
Decal, safety	4700903424	201
Decal, safety	4700903459	201
Decal, Screed leveling ruler	D717410015	69
Decal, seat belt	4812220092	202
Decal, starter relay	D717410026	194
Decal, warning	4812220088	198
Digi-slope sensor	4812200278	273,286
Din rail	D717905006	190,197
Din rail slotted	D717104040	187
Diode	D717101015	193
Diode, relay surge protection	D717104004	187
Dirt guard	D717170636	71,86
Disc	D717951450	81,96
DIsc	D717951464	81,96
Disc	D717951471	81,96
Disc	D717951499	81,96
Disc	D717951506	81,96
Disc spring	D717011016	18,20
Display with program	D717101507	176
Display, with program	4812200007	180
Distance washer	D880180421	219,243
Distance washer	D880180422	219,243
Distance washer	D880180423	219,243
Door latch key	4812222078	199
Door latch plunger	4812221388	113
Door latch socket	4812221389	113
Door leaf	D717010587	7
Door lip	D717010573	8
Door stop, rear hood	D717111525	104,106
Door, battery switch	D717111536	107
Door, left	D717110502	104
Door, middle	D717110504	104
Door, right	D717110510	104
Doorstop mount plate	D717010641	11
Drain hose	D717085094	124
Drive assembly mount	D717010552	7
Drive assembly mount	D717010553	7
Drive shaft	D717061021	29
Drive sleeve	D756061136	216,240
Driveshaft key	D717952374	33
Duct, flex	D717012506	13
Duct, suction air	D717082005	128
Dust cap	D717170603	74,88
Dust cover, bolt-on	D717170625	70,85
ECD link	D717952745	148
EDC kit	D717950302	141,155,162
EDC kit	D717950386	147
Edge guard	D717101054	194
Edge protector	D717103029	179,182
Edge Trim	D717081034	134
Edge Trim	D717081035	134
Edge trim	D717085083	123
Edge trim	D717101051	194
Edge Trim Gusset Seal	D717010014	5
Edge trim support, left	D717085096	123
Edge trim support, left end	D717085101	123

Please check Table of Contents for use of a part number

PARTS ALPHABETICAL INDEX

Description	Part Number	Page
Edge trim support, middle	D717085097	123
Edge trim support, right	D717085092	4
Edge trim support, right	D717085098	123
Edge trim support, right end	D717085099	123
Edge trim support, right top	D717085100	123
Edge trim, engine rear	D717080015	118
Edge trim, fill hose hole	D717080018	118
Edge trim, front seal	D717085080	114
Edge trim, oil hose hole	D717080019	118
Edge trim, panel hole	D717080016	118
Edge trim, second engine rear	D717080017	118
Edge trim, shroud front	D717085081	114
Edge trim, shroud hole	D717085066	114
Edge trim, shroud middle	D717085089	114
Edge trim, shroud rear	D717085082	114
Elbow	4812200226	222,246
Elbow	D717083531	170
Elbow, 04-04	D717802052	121
Elbow, 06-04	4812200081	53,208,232
Elbow, 08-08	4812200113	53
Elbow, 08-08	D717800379	47
Elbow, 08-08	D717802682	208,232
Elbow, 1 3/4"	D717085040	121
Elbow, 1"	4812200230	184
Elbow, 1"	D717104518	191
Elbow, 1/2"	D717905007	197
Elbow, 1/4"-3/8"	D717801954	124
Elbow, 10-10	D717800064	66
Elbow, 10-12	4812200079	53
Elbow, 12	4812220143	136
Elbow, 12-12	D717800085	126,136
Elbow, 12-12	D717800113	126
Elbow, 12-12	D717801912	208,232
Elbow, 12-12	D717802017	121
Elbow, 12-12	D717802024	136,171
Elbow, 12-12	D717802031	208,232
Elbow, 12-12, 45 deg	D717800099	126
Elbow, 12-12, extra long	D717800092	66
Elbow, 12-16	4812200075	53
Elbow, 16-12	4812200082	53
Elbow, 16-16	4812200116	171
Elbow, 16-16	4812200118	170
Elbow, 16-16	D717800176	136
Elbow, 16-20	4812220889	47
Elbow, 16-20	4812220890	47
Elbow, 2"	D717085044	121
Elbow, 2"	D717085046	121
Elbow, 20-12-90	4812221096	47
Elbow, 32-32	D717800008	135
Elbow, 32-32	D717801555	124,126
Elbow, flareless	D717064505	32
Elbow, pipe	D717064513	32
Element, filter	D717951149	137,295,297
Emergency kit decal	D717952472	293
Enclosure	D717104001	187
End cap	D717950946	78,93
End cap	D717953361	143,157,164
End cap	D717954285	186
End cap gasket	D717954306	185
End cover, terminal block	D717104509	190
End plate, 2 wire fuse block	D717104033	189
End plate, 2-wire terminal block	D717104021	188
End plate, 3-wire terminal block	D717104022	189
End plate, 4-wire terminal block	D717104023	187
End stop, terminal block	D717104017	187,190,197
Engine frame	D717081001	133
Engine hose support	D717080008	118

Please check Table of Contents for use of a part number

PARTS ALPHABETICAL INDEX

Description	Part Number	Page
Engine mount	D717081023	133
Engine, front mount	D717081014	133
Exhaust	D717081511	130
Exhaust pipe	D717081512	130
Exhaust rain cap	D717081515	130
Extension	D960993190	213,237
Extension support, left	4812222674	226,230,250,254
Extension support, right	4812222676	226,230,250,254
Extension, left	D717903507	226,230,250,254
Extension, right	D717903506	226,230,250,254
External plug, 04	D717802276	66
EZIV 12" screed extension with heat, left	4812200155	264,277
EZIV 12" screed extension with heat, right	4812200156	264,277
EZIV 18" screed extension with heat, left	4812200157	264,277
EZIV 18" screed extension with heat, right	4812200158	264,277
EZIV 24" screed extension with heat, left	4812200159	264,277
EZIV 24" screed extension with heat, right	4812200160	264,277
EZIV 6" cut off shoe extension	4812200164	264,277
EZIV 6" cut off shoe, left	4812200163	264,277
EZIV 6" cut off shoe, right	4812200162	264,277
EZIV clockwise depth crank screw long	4812200166	264,277
EZIV counter-clockwise depth crank screw long	4812200165	264,277
EZIV heat endgate safety kit	4812200170	265,278
EZIV heated endgate kit	4812200167	264,277
EZIV safety endgate, left	4812200169	264,277
EZIV safety endgate, right	4812200168	264,277
EZIV wide width kit	4812200161	264,277
EZR clockwise depth crank, long, 101-105	4812200174	265,278
EZR clockwise depth crank, long, 106+	4812200172	265,278
EZR counter-clock depth crank, long, 101-105	4812200173	265,278
EZR counter-clockwise depth crank, long, 106+	4812200171	265,278
EZR heated endgate kit	4812200175	265,278
EZR safety edge complete item	4812200179	265,278
EZR safety edge complete item	4812200180	265,278
EZR safety edge complete item	4812200181	265,278
EZR safety edge complete item	4812200182	265,278
EZR safety edge complete item	4812200183	265,278
EZR safety edge complete item	4812200184	265,278
EZR safety edge complete item	4812200185	265,278
EZR safety edge complete item	4812200186	265,278
EZR safety edge complete item	4812200187	265,278
EZR safety edge complete item	4812200191	266,279
EZR safety edge complete, left	4812200190	266,279
EZR safety edge complete, right	4812200178	265,278
EZR safety edge float with heat, left	4812200189	266,279
EZR safety edge float with heat, right	4812200177	265,278
EZR safety edge float, left	4812200188	265,278
EZR safety edge float, right	4812200176	265,278
EZR sceed assembly	4812200296	266,279
Fan, cooler	D717085003	121
Feed sensor bracket mount	D717010629	10
Feedback link	D717953291	143,157,164
Feeder controller	D717102013	264,277
Filler neck	D717083516	169
Filter, fuel	D717951975	127,295,296,297
Filter, fuel/separator	D717950673	127,295,296,297
Filter, high-pressure	4812220748	47
Filter, oil	D717950694	127,296,297
Filter, primary air	D717950659	129,296,297
Filter, safety air	D717950666	129,296,297
First-aid kit	D717952283	293
Fitting straight, 1"	D717104515	190
Fitting straight, 1/2"	D717104516	190,256
Fitting, 06-05	D717801541	16
Fixed housing	D717954299	186
Flange adapter	D717953375	158
Flange adapter	D717953382	144

Please check Table of Contents for use of a part number

PARTS ALPHABETICAL INDEX

Description	Part Number	Page
Flange cover	D717952773	148
Flange cover	D717953473	158
Flange cover	D717953480	144
Flange housing	D717952787	149
Flasher, 24V	D717104010	189
Flat washer, 0.5"	D717801086	4,13,14,15,25,28 35,40,42,101,102 109,110,115,120 122,131,133,135 140,169,184,222 226,230,246,250 254
Flat washer, M16	4700600011	211,235
Flex pipe	D717081513	130
Floor, battery box	D717101003	192
Floor, front left	D717060005	25,36
Floor, front right	D717060007	25,36
Floor, rear left	D717060009	25,36
Floor, rear right	D717060011	25,36
Frame channel	D717010534	7
Frame channel bar	D717010530	9
Frame stiffener	D717010614	10
Front adjuster plate	D717010592	8
Front conveyor	D717013001	15
Front conveyor plate	D717010540	8
Front handle support	D717013022	15
Front hood cover	D717111514	106
Front hood cover, curbside	D717111534	106
Front hopper skirt	4812220716	44
Front lift lug	D717010577	10
Front wall	D717010522	9
Front wall gusset	D717010586	9
Front work function	4812221104	47
Fuel cap	D717083521	169
Fuel door	D717111538	106
Fuel hose	D717083537	170
Fuel hose, 3/8"	D717952248	293
Fuel level sending	D717083508	169
Fuel supply hose	D717083533	170
Fuel tank	D717083501	169
Fuel tank hose, left	D717083542	58,170
Fuel tank hose, right	D717083543	58,170
Fuel tank mount plate	D717010602	9
Fuel tank standoff	D717010615	10
Fume extractor	D717012502	13
Fume screen	D717010017	5
Fuse, 100A	D717101046	193
Fuse, 125A	D717101048	194
Fuse, 30A	D717101045	193
Fuse, 50A	D717101047	194
Fuseholder, battery box	D717101010	192
Fuseholder, inline	D717101018	193
Gasket	D717083509	169
Gasket	D717950071	147
Gasket	D717950085	147
Gasket	D717950295	141,155,162
Gasket	D717950351	141,155,162
Gasket	D717950813	77,92
Gasket	D717950925	77,92
Gauge, hydraulic sight	D717084545	135
Gear	D717951212	80,95
Gear	D717951436	81,96
Gear bearing, left	D722183403	219,243
Gear bearing, right	D722183411	219,243
Gear box, splitter	D717190500	139
Gearbox	D717061012	28
Generator	D717100501	184

Please check Table of Contents for use of a part number

PARTS ALPHABETICAL INDEX

Description	Part Number	Page
Generator mount	D717010605	10
Generator mount	D717010606	10
Grating, rear	D717110003	99
Grating, rear	D717110004	99
Grease block	D717064510	11
Grease line	4812221374	13,58
Grease line, 4	4812221068	13,58
Grease nipple	D935511210	214,238
Grommet	D717101019	173,256
Grommet	D717101020	173
Grommet	D717103004	176,180
Grommet	D717105504	196
Grommet	D717105505	196
Grommet	D717909507	259
Guide plate, left	D717060018	25,35
Guide plate, middle	D717060020	25,35
Guide plate, right	D717060013	25,35
Guide pole support	D717011506	14
Guide pole support	D717900502	16
Guide pole support, left	D717900503	16
Guide pole support, right	D717900504	16
Guide post	D717953284	143,157,164
Gusset	D717010566	7
Gusset	D717952514	271,284
Gusset plate	D717180015	220,244
Hair pin	D717170601	71,86
Hand rail, left	4812221629	115
Hand rail, right	4812221628	115
Handrail mount	D717010609	10
Hangar casting	D717952556	271,284
Hard line, grease	D717064501	32
Hard line, grease	D717064502	32
Harness	D717906505	257
Harness tie-down lug	D717010650	11
Harness, AC main panel to aux panel	D717104521	197
Harness, AC main panel to fume extractor	D717104522	191
Harness, alternator-air	D717101049	194
Harness, ECM	D717101023	174
Harness, engine CAN	D717101028	174
Harness, front functions	D717101514	174
Harness, generator to AC panel	D717104520	191
Harness, left console to DC box	D717103028	178
Harness, lh front headlight	D717101517	255
Harness, rear functions	D717101513	174
Harness, rh front headlight	D717101516	255
Harness, right console to DC box	D717103505	182
Harness, starter - alternator - air	D717101037	174
Harness, work function controls	D717102520	174
Head light, left side	D717906004	255
Head light, right side	D717906005	255
Head, fuel separator	D717952437	127
Head, oil filter	D717952395	127
Height gauge, left	4812221505	208,232
Height gauge, right	4812221502	208,232
Hex bolt, 3/4"	D717010005	3
Hex bolt, 5/16"	D717801198	21
Hex flange	4812220245	134
Hex head screw, 3/4"	D717801632	35
Hex head screw, 3/8"	D717801653	23,27,36
Hex head screw, 5/8"	D717801667	25,35
Hex lock nut, 10	4812222579	191
Hex nut, 1/4"	D717801849	40,42,113
Hex nut, 5/16"	D717801023	47,107,120,171
Hex nut, 5/16"	D717801464	120
Hex nut, M10	D717801002	113,178,182
Hex nut, M10	D717801009	190,197
Hex nut, M8	D717800946	188

Please check Table of Contents for use of a part number

PARTS ALPHABETICAL INDEX

Description	Part Number	Page
Hex nut, M8	D717800967	188
Hex screw, 10	4812222578	191
HIC assembly	4812221108	47
HIC hand pump bracket	D717010632	10
HIC, rear valve	D717953711	67
Hinge	D717070516	9
Hinge, exhaust	D717081521	132
Hold-down pin	D717953095	149,153
Hold-down pin retainer	D717954313	185
Hold-down pin slipper	D717954502	185
Holder, exhaust pin	D717081517	132
Hood cover	D717111511	106
Hood cover	D717111528	106
Hood door seal, left	4812200234	100
Hood door seal, right	4812200235	100
Hood frame	D717111501	106
Hood frame support	D717010597	8
Hood frame support	D717010598	8
Hood half	D717012509	13
Hood seal backing plate	4812200215	100
Hood seal backing plate	4812200287	100
Hood support angle	D717010589	8
Hood support bar	D717010579	7
Hood support bar	D717010588	8
Hopper lift cylinder mount	D717010521	8
Hopper pivot pin	D717070509	40,42
Hopper skirt	4812221566	41
Hopper skirt	4812221567	43
Hopper, left	D717070501	40
Horn, disc 24V	D717101016	174
Hose	D960969150	213,237
Hose assembly	4812221048	47,58
Hose assembly	D717190006	291
Hose assembly, #1, 08	D717920002	62
Hose assembly, #101, 16	D717920569	60
Hose assembly, #102, 16	D717920576	60
Hose assembly, #103, 16	D717920583	56
Hose assembly, #104, 32	D717920590	56
Hose assembly, #105, 32	D717085055	58,291
Hose assembly, #109, 06	D717920597	55
Hose assembly, #11, 12	D717920058	59
Hose assembly, #110, 06	D717920604	55
Hose assembly, #111, #112, 04	D717920611	60
Hose assembly, #113, 04	D717920625	56
Hose assembly, #114, #115, 08	D717920632	61,267,275,280 288
Hose assembly, #116, 06	D717920639	60
Hose assembly, #12, 12	D717920065	61
Hose assembly, #124, 20	D717920646	58,291
Hose assembly, #125, 16	D717920653	56
Hose assembly, #126, 04	D717920660	57
Hose assembly, #127, 04	D717920667	57
Hose assembly, #128, 04	D717920674	57
Hose assembly, #129, 04	D717920681	57
Hose assembly, #13, 12	D717920072	59
Hose assembly, #130, 04	D717920688	57
Hose assembly, #131, 04	D717920695	57
Hose assembly, #132, 10	4812200299	58,140
Hose assembly, #133, 12	4812200298	58,136
Hose assembly, #134, 10	4812200297	58,119
Hose assembly, #14, 08	D717920079	63
Hose assembly, #15, 08	D717920086	63
Hose assembly, #19, 04	D717920093	59
Hose assembly, #2, 12	D717920009	63
Hose assembly, #20, 16	D717920100	59
Hose assembly, #21, 16	D717920107	59
Hose assembly, #22, 12	D717920114	59

Please check Table of Contents for use of a part number

PARTS ALPHABETICAL INDEX

Description	Part Number	Page
Hose assembly, #23, 04	D717920121	59
Hose assembly, #24, 04	D717920128	59
Hose assembly, #25, 12	D717920135	55
Hose assembly, #257, 24	D716920400	291
Hose assembly, #26, 04	D717920142	59
Hose assembly, #27, 04	D717920149	59
Hose assembly, #28, 04	D717920156	63
Hose assembly, #29, 04	D717920163	63
Hose assembly, #3, 12	D717920016	63
Hose assembly, #32, 04	D717920170	62
Hose assembly, #33, 04	D717920177	62
Hose assembly, #34, 04	D717920184	62
Hose assembly, #35, 04	D717920191	62
Hose assembly, #36, 08	D717920198	63
Hose assembly, #37, 08	4812200300	62
Hose assembly, #38, 06	4812200301	62
Hose assembly, #39, 04	D717920219	62
Hose assembly, #4, 04	D717920023	63
Hose assembly, #40, 06	4812200302	62
Hose assembly, #42, 12	D717920240	55
Hose assembly, #43, 12	D717920233	56
Hose assembly, #43, 12	D717920235	55
Hose assembly, #44, 12	D717920247	59
Hose assembly, #45, 16	D717920254	55
Hose assembly, #46, 16	D717920261	55
Hose assembly, #47, 08	D717920268	63
Hose assembly, #48, 08	D717920275	63
Hose assembly, #49, 08	D717920282	63
Hose assembly, #5, 08	D717920030	62
Hose assembly, #50, 04	D717920289	63
Hose assembly, #52, 04	D717920296	63
Hose assembly, #54, 10	D717920303	56
Hose assembly, #55, 10	D717920310	56
Hose assembly, #56, #57, 16	D717920317	55
Hose assembly, #58, 08	D717920324	55
Hose assembly, #59, 08	D717920331	55
Hose assembly, #6, 08	D717920037	62
Hose assembly, #60, #61, 12	D717920338	56
Hose assembly, #63, #64, 10	D717920352	56
Hose assembly, #65, 16	D717920359	63
Hose assembly, #66, 12	D717920366	56
Hose assembly, #67, 12	D717920373	56
Hose assembly, #68, 12	D717920380	59
Hose assembly, #69, 08	D717920387	62
Hose assembly, #70, 08	D717920394	62
Hose assembly, #75, 16	D717920429	61
Hose assembly, #81, 08	D717920450	61
Hose assembly, #82, 16	D717920457	59
Hose assembly, #83, 16	D717920464	59
Hose assembly, #84, 16	D717920471	59
Hose assembly, #85, 16	D717920478	59
Hose assembly, #86, 16	D717920485	59
Hose assembly, #87, 04	D717920492	63
Hose assembly, #89, 08	D717920499	63
Hose assembly, #90, 16	D717920506	59
Hose assembly, #91, #92, 12	D717920513	55
Hose assembly, #93, 12	D717920520	55
Hose assembly, #94, 12	D717920527	55
Hose assembly, #95, #96, 06	D717920534	63,267,275,280 288
Hose assembly, #95, 08	D717085034	58
Hose assembly, #97, 04	D717920541	64,267,275,280 288
Hose assembly, #99, 12	D717920555	60
Hose assembly, fuel tank	D716083536	291
Hose assy, 06	D717920702	16
Hose barb	D717083546	170

Please check Table of Contents for use of a part number

PARTS ALPHABETICAL INDEX

Description	Part Number	Page
Hose barb	D717909518	259
Hose barb elbow	D717085063	122
Hose barb, 06-04	D717802045	124
Hose clamp	4812200087	140
Hose clamp, 2 3/8"	4812220117	123
Hose clamp, 3 1/2"	4812220118	122
Hose end	D717064503	32
Hose extension, 12	D717903085	225,249
Hose holder small	D717083004	120
Hose kit case	D717952367	293
Hose kit, generator system	4812200092	53
Hose list, truck hitch option	D717900506	16
Hose reel	D717909505	259
Hose, 04	D717951996	291
Hose, 06	D717903078	223,224,247,248
Hose, 06	D717903092	225,249
Hose, 06	D717952031	291
Hose, 06	D717952038	291
Hose, 08	D717952066	291
Hose, 10	D717952094	292
Hose, 10	D717952101	292
Hose, 12	D717903071	223,224,247,248
Hose, 12	D717952129	292
Hose, 12	D717952136	292
Hose, 12	D717952143	292
Hose, 16	D717952178	292
Hose, 16	D717952185	292
Hose, 16	D717952192	292
Hose, cac hump	D717085041	121
Hose, fill, short extension	D717085062	122
Hose, fill, surge tank to water pump	D717085057	122
Hose, flexible	D717952416	127
Hose, flexible	D717952423	127
Hose, flexible	D717952444	127
Hose, hump, 5"	D717082006	128
Hose, pump to hose reel	D717909509	259
Hose, reducing hump, 5"	D717082007	128
Hose, vent, cooler to surge tank	D717085058	122
Hose, vent, engine to surge tank	D717085059	122
Hour meter	D717101007	187
Housing	D717950883	77,92
Housing	D717952780	149
Housing	D756061106	216,240
Housing and bearing	D717951345	80,95
Housing cover	D756183315	216,240
Housing, bearing	D717061026	29,37
Housing, end bearing	D717061002	29,37
Housing, shaft spacer	D717060502	30
Hub	D717951373	80,95
Hub	D756183218	216,240
Hub, bogie wheel	D717170550	74,88
Hub, idler wheel	D717170623	76,90
Hydraulic oil filters bracket	4812200307	4
Hydraulic suction manifold	D717084525	135
Hydraulic tank	D717084501	135
Hydraulic tank bracket	D717083001	120
Hydraulic wrench	D717952479	293
Idler frame	D717170588	70,85
Inclinometer	D717101515	188
Indicator	D717950729	65
Indicator	D717951142	137
Inner ring	D935128427	214,238
Inner shaft slide	D717060505	30
Inner spring, LS	D717954327	152
Inner spring, PC	D717954334	152
Insert	D717010515	9
Insert	D717010631	10

Please check Table of Contents for use of a part number

PARTS ALPHABETICAL INDEX

Description	Part Number	Page
Installation manual	D717952563	271,284
Insulation pad , top left rear	D717111550	106
Insulation pad, battery bottom	D717111578	192
Insulation pad, battery box, front	D717111544	192
Insulation pad, battery box, lh side	D717111586	192
Insulation pad, battery box, side	D717111571	192
Insulation pad, cooler support	D717085075	124
Insulation pad, cross tube, bottom	D717111562	107
Insulation pad, front left	D717111560	106
Insulation pad, front left, right side	D717111555	106
Insulation pad, front mid	D717111559	106
Insulation pad, front right top	D717111558	107
Insulation pad, front right, right side	D717111556	106
Insulation pad, front tube, bottom	D717111561	106
Insulation pad, front, right door	D717111554	106
Insulation pad, front, right, front	D717111557	107
Insulation pad, left door	D717111552	112
Insulation pad, left door	D717111567	112
Insulation pad, mid tube bottom	D717111563	106
Insulation pad, Panel, Cylinder, left	D717111570	99
Insulation pad, Panel, Cylinder, right	D717111569	99
Insulation pad, rear left door	D717111543	104
Insulation pad, rear mid door	D717111542	104
Insulation pad, rear right	D717111577	107
Insulation pad, rear upright	D717111564	107
Insulation pad, rear, right door	D717111545	104
Insulation pad, right rear walk	D717111546	104
Insulation pad, side left	D717111565	107
Insulation pad, side right	D717111566	106
Insulation Pad, side, left walk	D717111548	104
Insulation pad, side, right walk	D717111547	104
Insulation pad, top rear mid	D717111549	107
Insulation pad, top right rear	D717111551	106
Isolator, cooler	D717085002	121
Jam nut, 5/8"	D717170614	71,86
Jam nut, 5/8"	D717800890	101,102
J-bolt, 3/8"	D717101008	192
Journal bearing	D717950330	141,155,162
Junction box mounting	4812200272	273,286
Key	D717950554	141,155,162
Key, 2.375"	D717061022	29,37
Key, 3.125"	D717061023	29,37
Kit, control	D717950211	154
Kit, cylinder block	D717950176	154
Kit, front bearing	D717950204	154
Kit, gland seal	D717950743	49
Kit, gland seal	D717950750	52
Kit, gland seal	D717950757	50,51,73,91
Kit, piston seal	D717950764	50,51,73,91
Kit, piston seal	D717950771	49
Kit, piston seal	D717951639	52
Kit, rear bearing	D717950197	154
Kit, restriction indicator remote mount	D717082016	128
Kit, seal	D717950736	65,295,297
Kit, seal	D717951135	137,295,297
Kit, seal	D717951240	67
Kit, sonic tracker	D717102511	268,281
Knob, umbrella clamp	D717113040	101,102,109,110
L bracket	D717952577	271,284
Lanyard, hinge pin	D717081533	130
Large bin	D717952269	293
Latch plate	4812221332	113
Latch, side door	D717110010	112
Layton hitch pad	D717010603	9
LED, green	D717103014	177,180
LED, yellow	D717103013	176,180
Left center weld assembly	4812221748	272,285

Please check Table of Contents for use of a part number

PARTS ALPHABETICAL INDEX

Description	Part Number	Page
Left junction box	4812200268	273,286
Left side	D717115000	112
Leveler	D717953648	144,158,165
Leveling System Ops Man, Topcon / Moba, A5	D717410115	298,299
Lifting bracket	D717953459	144,158,165,186
Lifting bracket	D717953634	150
Lifting bracket	D717954341	153
Lifting bracket spacers	D717953452	144,158,165
Light 24V, work system	D717105503	196
Light, dash board	D717103019	177,181
Light, side amber	D717906003	255
Light, tail left side	D717906001	255
Light, tail right side	D717906002	255
Lip seal	D717950967	78,93
Lip seal	D717952794	149
Lip seal	D717953032	143,157,164
Lip seal	D717954348	185
Liquid-tight fitting	4812200228	13
Lock	4700358881	199
Lock nut, 1/2"	D717800862	101,102,109,110 120,122,131,133 169,184
Lock nut, 1/4"	D717800855	179,182,193,197
Lock nut, 1-8	D717800848	133
Lock nut, 3/4"	D717800841	17,19,263,267,275 280,288
Lock nut, 3/8"	D717800834	4,13,21,23,27,30 36,71,86,99,107 112,118,123,128 135,170,190,192 196,259
Lock nut, 5/16"	D717800827	3,46,99,105,107 117,123,173,192
Lock nut, 5/16"	D717800904	21,105
Lock nut, M10	D717800820	104,107,112,122
Lock nut, M10	D717800883	113,178,182,188 190,197
Lock nut, M10	D717800897	128,193,221,245 260
Lock nut, M6	D717800876	178,182,197,255
Lock nut, M8	D717800869	188,190
Lock pin	4812200009	31,34
Lock plate	D936780017	211,235
Lock ring	D717953564	150
Lock washer	4749900025	211,227,228,235 251,252
Lock washer	4749900032	219,243
Lock washer	4749900080	217,241
Lock washer	4749901061	219,243
Lock washer, 10	D717800806	118
Locking plate	D717953578	150
Loop flushing kit	4812200130	208,232
Lower bearing stop	4812200214	101,102,109,110
Lower slide support	D717010538	8
Lube pipe	D754180506	213,237
Lube pipe	D754180516	213,237
Magnet	D717084548	135
Maintained action block	D717103017	187
Male connector, straight flareless	D717064506	32
Manual	4812200276	273,286
Mid handrail	D717010611	10
Mid rain cap, exhaust	D717081520	132
Middle chain support	D717060001	25,35
MOBA programmer	D717102006	290
Module, fuel	D717952451	127
Motor	D717061035	28
Motor housing	D717950806	77,92

Please check Table of Contents for use of a part number

PARTS ALPHABETICAL INDEX

Description	Part Number	Page
Motor, Hydr	D966057210	219,243
Motor, starter	D717952388	127
Mount	D717061013	28
Mount, air cleaner	D717082004	128
Mount, generator isolator	D717100505	184
Mount, isolation engine frame	D717081017	133
Mount, isolation engine frame	D717081018	133
Mount, release agent tank	D717909512	259
Mount, Topcon	D626000009	264,277
Mount, wash down spray wand	D717909513	259
Mounting components kit	4812222662	229,253
Mounting plate	D717010567	8
Muffler	D717081507	132
Muffller, hood mount, top	4812222251	130
Multifunction valve kit	D717950309	141,155,162
Nameplate	4700792568	202
Narrow flat washer, 0.25"	D717801058	4,100,112,117,170 173,177,181,188 190,193,197,255
Narrow washer, 0.313"	D717801051	3,17,19,45,72,87 99,104,107,117 123,171,173,192 260
Narrow washer, 0.38"	D717801044	4,13,21,23,27,30 36,40,42,45,71 86,99,104,107,112 114,118,120,122 128,135,139,169 177,181,187,192 196,259
Narrow washer, 0.625"	D717801079	25,27,35,207,226 230,231,250,254
Narrow washer, 0.75"	D717801072	16,17,19,25,28 35,71,86,207,231 263,267,275,280 288
NC contact, block	D717103015	177,181
Needle bearing	D717954435	186
Needle valve	D717085102	124
Nema box	D717905005	197
Nipple, 16-16	D717802647	207,223,224,225 231,247,248,249
Nipple, 3/8"	D717909514	260
Nipple, 3/8"	D717909521	259
Nipple, grease	D935513220	213,237
NO contact	D717103016	177,181,187
Nut	4700928847	211,227,228,235 251,252
Nut	D717951338	80,95
Nut	D717952948	79,94
Nut	D717953886	145,159,165
Nut	D938481615	217,241
Nut seal	D717951037	78,93
Nut, 0.31"	D717010627	10
Nut, 1/2"	4812200052	14
Nut, 1/2"	D717010601	9
Nut, 1/2"	D717801163	15
Nut, 1/2"	D717801324	11,115
Nut, 1/4"	D717180030	220,244
Nut, 1/4"	D717800911	257
Nut, 3/16"	D717085049	11
Nut, 3/4"	D717801030	3
Nut, 3/4"	D717801317	207,231
Nut, 3/8"	D717800792	112
Nut, 5/8"	D717801156	207,231
Nut, M6	D717801233	130
Nut, M8	4700586003	101,102,109,110

Please check Table of Contents for use of a part number

PARTS ALPHABETICAL INDEX

Description	Part Number	Page
Nyloc nut, 1/4"	D717800785	100,117,170,173 178,188,198
Nylon hole plug, 7	D717101043	178
Operation and Maintenance Manual, A5	D717410045	298,299
Operation and Parts Manual Set, CD	D717410129	298,299
Operator console	D717113015	176,180
Operator manual, leveling controll	D717102505	268,281
Option, Balloon lights	D717905500	266,279
Orifice	D717950064	147
Orifice	D717950981	78,93
O-ring	4812221201	136
O-ring	D717170630	72,87
O-ring	D717190001	139
O-ring	D717950267	147
O-ring	D717950274	147
O-ring	D717950561	142,155,162
O-ring	D717950568	141,155,162
O-ring	D717950575	142,156,163
O-ring	D717950582	142,156,163
O-ring	D717950589	142,156,163
O-ring	D717950596	142,156
O-ring	D717950603	142,156,163
O-ring	D717950610	142,156,163
O-ring	D717950827	77,92
O-ring	D717950855	77,92
O-ring	D717951044	78,93
O-ring	D717951051	78,93
O-ring	D717951058	78,93
O-ring	D717951065	78,93,142,148,156 163,186
O-ring	D717951072	78,93,142,148,153 156,163,185
O-ring	D717951079	79,94,142,148,156 163
O-ring	D717951198	80,95
O-ring	D717951380	81,96
O-ring	D717951387	81,96
O-ring	D717951513	82,97
O-ring	D717951527	82,97
O-ring	D717951534	82,97
O-ring	D717951569	82,97
O-ring	D717951576	82,97
O-ring	D717951625	82,97
O-ring	D717953543	150
O-ring	D717953907	165
O-ring	D717953928	145,159,165
O-ring	D717953935	159
O-ring	D717953942	150
O-ring	D717953949	145,159,166
O-ring	D717953956	145,159,166
O-ring	D717953963	150
O-ring	D717953970	145,150,152,159 166
O-ring	D717953977	145,159,166
O-ring	D717954362	153
O-ring	D932211662	216,240
O-ring	D932211691	214,238
O-ring	D932211701	214,238
O-ring	D932211745	219,243
O-ring	D932211813	216,240
O-ring gasket seal	D717950890	77,92
O-ring kit	D717952290	293
O-ring, 152	D717190003	139
O-ring, 154	D717190002	139
O-ring, suction manifold seal	D717084546	135
Outer chain support	D717060004	25,35
Outer housing	D756183201	216,240

Please check Table of Contents for use of a part number

PARTS ALPHABETICAL INDEX

Description	Part Number	Page
Outer spring, LS	D717954369	152
Outer spring, PC	D717954376	152
Outside beam weld assembly	4812221749	272,285
Outside beam weld assembly	4812221750	272,285
Overhaul seal kit	D717954383	186
Overhaul seal kit	D717954390	154
P clamp	4812221656	47
P clamp	4812222607	16
P clamp, 1.25"	D717104038	189
Pad	D717951205	80,95
Pad, cork tank strap	D717083529	169
Pad, mounting GFCI circuit breacker	D717104505	190
Pad, tank, long	D717083016	120
Pad, tank, short	D717083017	120
Paddle latch	D717111535	112
Panel	D717081032	133
Panel	D717081033	134
Panel, engine sealing	D717080013	118
Panel, surge gap	D717080014	118
Partition	D717101012	192
Parts List, A5	4812200125	299
Parts List, A5	4812200126	298
Parts List, Letter	D717410066	298,299
Paving guide pole	D717011501	14,16
PCP	D717950701	142,156,163
Pilot	D717954194	67
Pin	D717011011	17,19
Pin	D717070518	40,42
Pin	D717950624	142,156,163
Pin	D717951086	79,94,142,156,163
Pin	D717951352	80,95
Pin	D717951492	81,96
Pin	D717952836	149
Pin	D717953137	149
Pin	D717953508	144,158,165
Pin	D938690604	215,239
Pin weldment	4812222647	47
Pin, cylinder	D717091510	45
Pin, cylinder pivot	D717093501	45
Pin, screed cylinder pivot	D717040514	21
Pin, screed front lift cylinder	D717091505	45
Pin, screed lift cylinder	D717091504	45
Pin, screed rear lift cylinder	D717091509	45
Pin, stack hinge	D717081527	130
Pin, threaded	D937976545	214,216,238,240
Pin, track tensioner cylinder anchor	D717170581	71,86
Pipe, air charge cooler	D717085023	121
Pipe, air charge return	D717085021	121
Pipe, cooler to engine	D717085022	121
Pipe, engine to cooler	D717085020	121
Piston	D717951541	82,97
Piston	D717951597	82,97
Piston	D717953067	143,157,164
Piston	D717954404	185
Piston assembly	D717954397	153
Piston kit	D717953606	150
Piston ring	D717953431	144,158,164
Piston ring kit	D717951002	78,93
Pivot post	4812200282	273,286
Pivot post	D717952507	271,284
Pivot release, left	D717110018	100
Pivot release, right	D717110017	100
Placard, slow moving	D717113043	4
Planetary	D717951324	80,95
Plate	D717010006	3
Plate	D717010013	4
Plate	D717010565	7

Please check Table of Contents for use of a part number

PARTS ALPHABETICAL INDEX

Description	Part Number	Page
Plate	D717010580	7
Plate	D717083018	170
Plate	D717110507	105
Plate	D717180002	210,234
Plate	D717906015	255
Plate, access panel	D717103009	176,180
Plate, access panel	D717103503	180
Plate, auger mount	D717180034	210,234
Plate, center console	D717010004	4
Plate, clamp	D717070503	40,42
Plate, conveyor wear	D717010575	7
Plate, conveyor wear	D717010576	7
Plate, cover console	4812220697	12
Plate, door stop	4812222048	112
Plate, door stop	D717110508	104
Plate, exhaust flange	D717081518	132
Plate, holder, push roller	D717011010	17,19
Plate, lh side extension	D717110506	104
Plate, screed support	4812220568	12
Plate, slider	D717040513	21
Plate, switch panel	D717103005	176
Plate, switch panel	D717103006	176
Plate, switch panel	D717103007	176,180
Plate, switch panel	D717103008	176
Plate, switch panel	D717103501	180
Plate, switch panel	D717103502	180
Plate, tow point gage	D717172008	69
Plate, tow point gage pointer	D717041005	21
Plate, truck hitch stop	D717900505	16
Plate, valve	D717950120	141,155,162
Plate, valve	D717950428	148
Plate, valve	D717950435	148
Platform doors staple	D717010651	12
Platform walkway seal	4812200236	100
Plug	D717950792	77,92,148
Plug	D717950834	77,92
Plug	D717950953	78,93
Plug	D717951093	79,94,142,148,156 163
Plug	D717951170	80,95
Plug	D717951177	80,95
Plug	D717952738	148
Plug	D717953109	143,157,164
Plug	D717954005	145,159,166
Plug	D717954012	150,152
Plug	D717954019	145,159,166
Plug	D717954026	145,159,166
Plug	D717954544	153,185
Plug, 06	D717801933	126
Plug, 1	D717952857	67
Plug, 1"	D717083514	169
Plug, 1"	D717083530	169
Plug, 1/4"	4812200120	124
Plug, 1/4"	4812220191	136
Plug, 10	D717801877	119,140
Plug, 16	D717801968	135
Plug, 2"	D717083515	169
Plug, pipe	D717064511	32
Plug, square	4812200102	170
Plug-10	D717952668	294
Plug-12	D717952675	294
Plug-16	D717952682	294
Plug-24	D717952689	294
Plug-32	D717952696	294
Plug-4	D717952647	294
Plug-6	D717952654	294
Plug-8	D717952661	294

Please check Table of Contents for use of a part number

PARTS ALPHABETICAL INDEX

Description	Part Number	Page
Pole mount, warning beacon	D717906503	257
Pole, steering guide inner	D717011519	14
Potentiometer	D717102014	264,277
Potentiometer knob	D717102015	264,277
Power outlet	D717105507	196
Pressure switch	D717101509	46
Profile sleeve	D756183419	219,243
Pump	D717909502	259
Purchased parts	D717952752	148
Purchased parts	D717952759	148
Push button e-stop	D717103001	176,180
Push button, horn	D717103011	177,180
Push button, parking brake	D717103010	176,180
Push button, warning lights	D717104011	187
PVB	D717953767	67
PVHC	D717953690	67
PVM	D717953760	67
PVSI	D717953746	67
PVSPM	D717953774	67
Quick pin with lanyard	D717081528	130
Quick release pin	D717091020	221,245
Radial end cap	D717954292	153
Radiator	D717951653	125
Radiator mount	D717085025	122
Rail mount clamp	4812220714	46
Rail mount clamp	D717090530	46
Rail mount clamp	D717090531	46
Rear electric bracket	D717010633	10
Rear handrail	D717010610	10
Rear lift lug	D717010607	10
Rear tie-down lug	D717010649	11
Rear wall	D717010502	8
Receptacle	D717905003	197
Receptacle	D717905004	197
Reducer bushing, 16-12	D717802010	123
Reduction	D717951219	80,95
Reduction	D717951401	81,96
Reflector strip	4812220077	202
Reflector strip	4812220078	202
Reflector strip	4812220079	202
Reflector strip	4812220080	202
Reflector strip	4812220081	202
Reflector strip	4812220082	202
Reflector strip	4812220095	202
Reinforcement bar	D717010628	10
Relay base	D717104003	187
Relay base, 24V	D717104042	189
Relay latch	D717104006	187
Relay starter solenoid	D717101013	193
Relay, 24V	D717104005	187
Relay, 24V	D717104041	189
Relay, 80A	D717104039	189
Relief valve	D717950932	78,93
Remote fuel filter mount	D717010635	11
Replacement filter	D717950477	65,295,297
Retainer guide	D717952731	148
Retainer, tension assembly	D717170577	71,86
Retaining plate	D717952983	142,156,163
Retaining plate	D717952990	142,156,163
Retaining ring	D717801191	45
Retaining ring	D717950638	148,186
Retaining ring	D717950645	142,156,163
Retaining ring	D717950988	78,93
Retaining ring	D717952934	79,94
Retaining ring	D717953130	149
Retaining ring	D717954040	150
Retaining ring	D717954047	145,159,166

Please check Table of Contents for use of a part number

PARTS ALPHABETICAL INDEX

Description	Part Number	Page
Retaining ring	D717954418	152
Retaining ring	D717954425	185
Retaining spring	D717954432	185
Right center weld assembly	4812221747	272,285
Right junction box	4812200269	273,286
Right side hopper	D717071001	42
Ring	D717951366	80,95
Ring	D717951429	81,96
Ring	D880180768	214,238
Ring gear and pinion	D951260300	217,241
Ring seal	D717950974	78,93
Ring, nilos	D930206202	216,240
Ring, oil seal	D936630040	216,240
Ring, piston	D717950113	141,155,162
Ring, piston	D717950407	148
Ring, retaining	D717950631	153
Ring, spacer	D717011004	17,19
Ring, VB500 screed	D880180754	214,238
Roading lights harness	4812200314	256
Roading lights weldment, left	4812200311	255
Roading lights weldment, right	4812200312	255
Roller	D717011006	18,20
Roller chain	D717061017	27,33
Roller spacer	4812200262	21
Roller, screed arm	4812200263	21
Rotating beacon	D717906501	257
Rubber door latch	4812221333	113
Rubber elbow	D717082010	128
Rubber grommet, 5/16"	D717103026	178,181,189
Rubber pad	4812221580	21
Rubber track, right	D717171004	70
Run tee, 04-04-04	D717800260	66
Run tee, 04-04-04-04	D717090526	46
Run tee, 08-08-08	4812200127	54
Run tee, 08-08-08	4812221095	66
Safety cap	D717950995	78,93
Safety Manual, A5	D717410059	298,299
SAS mount	D717982535	271,284
Scale	D717410023	201
Schematic, AC electrical system	D717146000	174
Schematic, DC electrical system	D717145500	174
Schematic, hyd system, 10' tracked paver	D717144000	46
SCR plug	D717950239	147
SCR valve	D717950400	148
SCR valve plug	D717950393	148
Screed anchor	D717010509	8
Screed arm, left	D717040501	21
Screed arm, right	D717041001	21
Screed disconnect jumper	D717952465	275,288
Screed lift cylinder anchor	D717010578	9
Screed replacement plug	4812221581	174
Screed support bar	D717010594	8
Screen, control filter	D717950379	141,155,162
Screw	4749900455	211,235
Screw	4749900776	212,236
Screw	D717950785	77,92
Screw	D717951114	79,94
Screw	D717951156	80,95
Screw	D717951618	82,97
Screw	D717951632	82,97
Screw	D717952913	149
Screw	D717952920	149
Screw	D717952941	149
Screw	D717952962	149
Screw	D717953025	143,157,164
Screw	D717953074	149
Screw	D717953102	143,157,164

Please check Table of Contents for use of a part number

PARTS ALPHABETICAL INDEX

Description	Part Number	Page
Screw	D717953123	149
Screw	D717954061	145,159
Screw	D717954068	145,159,166
Screw	D717954075	145,159,166
Screw	D717954089	166
Screw	D717954103	145,159,166
Screw	D717954117	146,160,166
Screw	D717954124	146,160,166
Screw	D717954152	146,160,166
Screw	D717954446	186
Screw	D717954453	153
Screw	D717954460	153
Screw	D717954467	153
Screw	D930452560	217,241
Screw	D937860060	215,216,239,240
Screw	D937860264	216,240
Screw	D937890151	217,241
Screw	D938151084	211,235
Screw	D938165873	211,235
Screw	D938330758	219,243
Screw	D961134205	213,237
Screw adjusting assembly	D717950869	77,92
Screw, 1/2"	D717800694	135
Screw, 1/2"	D717800701	4
Screw, 1/2"	D717800708	101,102,109,110 133,184
Screw, 1/2"	D717800715	40,42,120,130
Screw, 1/2"	D717800722	15
Screw, 1/2"	D717800729	25,28,35,40,42
Screw, 1/2"	D717800736	15,28,101,102,109 110,115,123,133 140,169,184,226 230,250,254
Screw, 1/2"	D717800743	14,122,135,170 226,230,250,254
Screw, 1/2"	D717801219	40,42
Screw, 1/2"	D717801303	21,29,37
Screw, 1/4"	D717800666	100,188
Screw, 1/4"	D717800673	4,40,42
Screw, 1/4"	D717800680	22,113,117,173 191,198,255
Screw, 1/4"	D717800687	112,178,182,189 197
Screw, 1/4"	D717800778	136
Screw, 1/4"	D717801212	257
Screw, 1/4"	D717801289	177,181
Screw, 1/4"	D717801296	193
Screw, 1/4"	D717801443	4
Screw, 1/4"	D717801604	112,207,231
Screw, 1/4"	D717801611	40,42
Screw, 1/4"	D717801618	193
Screw, 10-32	D717800659	128
Screw, 1-8	D717800652	133
Screw, 3/4"	D717800631	207,231
Screw, 3/4"	D717800638	16,28
Screw, 3/4"	D717800645	16
Screw, 3/4"	D717801037	72,86
Screw, 3/4"	D717801282	84
Screw, 3/4"	D717801387	84
Screw, 3/4"	D717801828	17,19
Screw, 3/8"	4812200323	47
Screw, 3/8"	4812222233	23
Screw, 3/8"	D717800582	104
Screw, 3/8"	D717800589	5,112
Screw, 3/8"	D717800596	4,40,42,99,139 260
Screw, 3/8"	D717800603	4,14,46,99,104

Please check Table of Contents for use of a part number

PARTS ALPHABETICAL INDEX

Description	Part Number	Page
Screw, 3/8"	D717800603	106,128,135,259
Screw, 3/8"	D717800610	4,45,86,87,104 118,122,134
Screw, 3/8"	D717800617	30,71,100,114,120 123,169
Screw, 3/8"	D717800925	71,87
Screw, 3/8"	D717801205	16
Screw, 3/8"	D717801268	177,181
Screw, 3/8"	D717801275	188
Screw, 3/8"	D717801338	106
Screw, 3/8"	D717802416	29,37
Screw, 3/8"	D717802444	21
Screw, 5/16"	4812222657	47
Screw, 5/16"	D717800533	45
Screw, 5/16"	D717800540	117
Screw, 5/16"	D717800554	46,171,173
Screw, 5/16"	D717800561	3,17,19,107,123 173,192
Screw, 5/16"	D717800568	45,174,260
Screw, 5/16"	D717800981	4
Screw, 5/16"	D717800988	108
Screw, 5/16"	D717801331	71,86,87
Screw, 5/16"	D717801597	46,100
Screw, 5/8	D717170615	71,86
Screw, 5/8"	D717800519	25,35,207,231
Screw, 5/8"	D717800526	207,231
Screw, 5/8"	D717801674	27
Screw, 5/8"	D717802094	27
Screw, 5/8"	D717802437	226,230,250,254
Screw, 5-16"	D717800918	3
Screw, 5-16"	D717800995	105
Screw, F30	D937634274	211,227,228,235 251,252
Screw, M10	D717111580	104,107,112
Screw, M10	D717800484	139,184
Screw, M10	D717800491	122,128
Screw, M10	D717800498	118
Screw, M10	D717800505	118
Screw, M10	D717800512	123
Screw, M10	D717800757	139
Screw, M10	D717801016	188
Screw, M10	D717801240	193,221,245
Screw, M10	D717801247	260
Screw, M12	D717800463	133
Screw, M12	D717800470	133
Screw, M12	D717800477	117
Screw, M12	D717801681	140
Screw, M12	D717801688	139
Screw, M16	D717800456	133
Screw, M20	D717800449	71,87
Screw, M6	D717800974	130,178,182
Screw, M6	D717801380	255
Screw, M6	D717801583	170
Screw, M8	D717800442	117
Screw, M8	D717800953	188,191
Screw, M8	D717800960	188
Screw, metric	D717954110	145,160,166
Screw,1/2"	D717800750	4,135
Seal	D717085084	123
Seal	D717170628	76,90
Seal	D717951359	80,95
Seal carrier assembly	D717950876	77,92
Seal kit	D717950540	161
Seal overhaul kit	D717953865	146,160,167
Seal overhaul kit	D717954656	150
Seal ring	D717954439	153
Seal ring	D880180419	216,240

Please check Table of Contents for use of a part number

PARTS ALPHABETICAL INDEX

Description	Part Number	Page
Seal, cooler front side	D717085079	114
Seal, end cap	D717950183	154
Seal, fume transition	D717012511	13
Seal, lip	D717950260	153
Seat	4812250003	101,102,109,110
Sensor	D717951128	79,94
Sensor bracket	4812200270	273,286
Sensor, coolant level	D717085054	121
Servo arm	D717953018	143,157,164
Servo cylinder	D717953669	145,158,165
Servo cylinder	D717953683	150
Servo piston	D717953599	150
Servo piston	D717953641	144,158,165
Servo piston assembly	D717952955	79,94
Servo piston assembly	D717954474	154
Set screw	D717950778	77,92
Set screw	D717951121	79,94
Set screw	D717954481	152
Set screw, 3/8"	D717802101	30,37
Shaft	D717010599	3
Shaft	D717950078	147
Shaft	D717950897	77,92
Shaft	D717954488	185
Shaft	D880180749	214,238
Shaft retainer	D717954411	152
Shaft seal	D717950218	147
Shaft seal assembly	D717950127	141,155,162
Shaft tooth	D717952808	149
Shaft, conveyor roller	D717060503	30
Shield	D717080007	118
Shim	D717040515	21
Shim	D717953501	144,158,165
Shim	D880180480	217,241
Shim	D880180481	217,241
Shim	D880180482	217,241
Shim	D880180483	217,241
Shim	D932100729	214,238
Shim	D932100730	214,238
Shim	D932100732	215,239
Shim	D932101171	217,241
Shim	D932101172	217,241
Shim	D932101174	217,241
Shim	D932101176	217,241
Shim	D932101327	217,241
Shim	D932101328	217,241
Shim	D932101330	217,241
Shim	D932101332	217,241
Shock valve	D717953753	67
Shoulder bolt	D717110020	100
Shoulder bolt	D717172011	84
Shoulder bolt, 3/8"	D717103030	178,182
Shoulder bolt, 3/8"	D717103034	178,182
Shoulder bolt, 3/8"	D717115003	105,108,112
Shroud center	D717085070	114
Shroud left	D717085068	114
Shroud right	D717085072	114
Side cover	D717953529	144,158,165
Side cover insert	D717952976	142,156,163
Side panel, left	D717114500	112
Side panel, rear right	D717112501	112
Side panel, right	D717114001	112
Side wall	D717010512	9
Side, battery box	D717101004	192
Side, battery box	D717101021	192
Side, battery box, lh	D717101022	192
Sight gauge	D717085078	123
Skirt, hopper front	D717013012	15

Please check Table of Contents for use of a part number

PARTS ALPHABETICAL INDEX

Description	Part Number	Page
Skirt, hopper sides	4812220717	40,42,44
Slide	4812200222	23
Slide, outer shaft	D717060508	30
Slider block	D717952801	149
Slider block	D717953697	145,159,165
Slipper guide	D717953305	143,157,164
Slipper guide bearing	D717953347	143,157,164
Slipper retainer	D717952829	149
Slipper retainer	D717954509	153
Slipper retainer	D717954516	185
Slipper retainer guide	D717954523	153
Slipper retainer guide	D717954530	185
Slope beam	4812200221	23
Slope beam mount	4812200219	23
Slope plate	4812200279	273,286
Slope, dual port	D717102503	268,281
Slotted pin	D717953984	150,153
Slotted pin	D717954537	186
Slow vehicle sign bracket	D717010643	11
Small bin	D717952276	293
Smoothtrac label	D717952542	271,284
Snap ring	D717061028	29,37
Snap ring	D717800435	18,20
Snap ring, operator station	D717113048	101,102,109,110
Socket screw	D717953011	143,157
Socket-head screw	D717951107	79,94
Socket-head screw	D717954138	79,94
Solenoid valve	D717953620	79,94
Solenoid valve kit	D717950057	147
Sonic pwm sensor, feed system	D717102002	195,269,282
Sonic ski sensor	4812200280	273,286
Sonic tracker II	D717102502	268,270,281,283
Spacer	4812200218	22
Spacer	D717010555	8
Spacer	D717170627	72,87
Spacer	D717951331	80,95
Spacer	D717951457	81,96
Spacer	D717951520	82,97
Spacer	D717951562	82,97
Spacer	D717952927	79,94
Spacer	D717953368	143,157,164
Spacer holder	4812222126	101,102,109,110
Spacer plate	D717010569	9
Spacer, 1"	4812220098	263,267,275,280 288
Spacer, duetsch connector	D717104035	188
Spacer, fuse holder	D717101044	193
Spacer, outer conv sprocket	D717061024	29,37
Spacer, prop rod	D717111581	107
Speed sensor	D717954551	186
Spiral pin	D717953998	145,159,166
Splash extension, left	D717903502	226,230,250,254
Splash extension, right	D717903501	226,230,250,254
Splash guard, left	D717012001	3
Splash guard, right	D717012004	3
Spline shaft	D717953333	143,157,164
Split-flange o-ring kit	D717952297	293
Spool	D717951016	78,93
Spool	D717953788	67
Spool	D717954458	152
Spring	D717950246	147
Spring	D717950960	78,93
Spring	D717951443	81,96
Spring	D717951485	81,96
Spring	D717951548	82,97
Spring	D717951604	82,97
Spring	D717952724	148

Please check Table of Contents for use of a part number

PARTS ALPHABETICAL INDEX

Description	Part Number	Page
Spring	D717952892	142,156,163
Spring	D717953410	144,158,164
Spring	D717953585	144,158,165
Spring	D717954565	152
Spring guide	D717950911	77,92
Spring guide, LS	D717954572	152
Spring guide, PC	D717954579	152
Spring pin	D717172012	84
Spring pin	D717954586	185
Spring retainer	D717953326	143,157,164
Spring retainer	D717953515	144,158,165
Spring retaining plate	D717951415	81,96
Spring seat	D717952997	143,156,163
Spring seat	D717953319	143,157,164
Sprocket	D717060515	30,37
Sprocket	D717061029	29,33
Sprocket & hub	D717061030	29,37
Sprocket & hub	D717061033	29,37
Sprocket, no. 100	D717061001	27,33
Starter key	4700940451	199
Stauff clamp, 2"	D717084551	136
Steering unit	D717101505	176,180
Stop collar	4812200265	273,286
Stop collar	4812200283	273,286
Stop collar	D717952528	271,284
Strainer, suction	D717909511	259
Strap, loop	D717080002	117
Strap, tank hanging	D717083526	169
Strip, hood transition	D717012510	13
Stud, 3/8"	D717170566	10
Stud. 0.38"	D717070513	10
Support	D717010549	7
Support	D880180772	214,238
Support bar	D717010542	7
Support pin	D717950904	77,92
Support washer	D717954593	185
Support, distributor	D722180900	211,235
Supporting documents	D717901502	270,283
Supprt, hood frame	D717111584	107
Surge protect diode	D717104008	189
Swash plate	D717952766	148
Swash plate	D717953389	144,158,164
Swash plate	D717954600	152
Swash plate bearing kit	D717953088	149
Swashplate bearing kit	D717954607	154
Swing arm	D717113009	101,102,109,110
Swing arm spacer	4812222124	101,102,109,110
Swing station frame	D717113001	101,102
Swing station frame	D717113501	109,110
Switch panel gasket, large	D717103033	178,182
Switch panel gasket, small	D717103032	178,182
Switch, battery disconnect	D717101011	193
Switch, key ignition	D717103002	176
Switch, propel mode selection	D717101504	176,180
Synch shaft kit	D717950939	78,93
Tab, adjuster lock	D717060513	30
Tab, exhaust bolt	D717081505	132
Tab, pin lock	D717093502	45
Tank	D717909501	259
Tank clamp	D717083527	169
Tank, coolant surge	D717085024	121
Tap bolt, 3/4"	D717170618	71,86
Tape, refl., back of walkway	D717410005	201
Tape, refl., frame channels	D717410002	202
Tape, refl., hop. flsh´g bolt´g plates	D717410004	201
Tape, refl., op. station bot. tubes	D717410003	201
Taper, roll bearing	D935229705	216,240

Please check Table of Contents for use of a part number

PARTS ALPHABETICAL INDEX

Description	Part Number	Page
Tapered roller bearing	D717170629	76,90
Tapped mount plate	D717180014	220,244
Tee, 08-08-04	D717800386	45
Temp baik w/sleeves	D717102509	268,281
Temp bail with sleeves	D717901504	270,283
Temperature sensor	D717084554	136
Tension pin	D717170576	71,86
Tension strap	D717083003	120
Tensioner	D717170579	70,85
Tensioner, idler	D717952430	127
Tensioning cylinder pin	D717170616	72,87
Terminal block, 2-wire	D717104014	188
Terminal block, 3-wire	D717104508	190
Terminal block, 4-wire	D717104016	187
Terminal block. 3-wire	D717104015	188
Test port	4812221507	47
Test Port	D717090504	46
Test port, male	D717090505	46,126,140
Threaded boss	D717180013	220,244
Threaded insert	D717010517	9
Threaded insert	D717010518	9
Threaded insert, 3/4"	D717010545	9
Thrust ball bearing	D935022420	214,238
Thrust plate	D717954614	185
Thrust washer	D717951583	82,97
Thrust washer	D717954621	185
Tie rod assembly	D717953781	67
Tip, spraying	D717951940	261
Toggle switch boot	D717103036	179,182,183,189
Toggle switch, 1	D717103021	177,181
Toggle switch, 3	D717103018	177,187
Toggle switch, 3	D717103022	177
Toggle switch, 7	D717103003	176,180
Top radiator shroud	D717085050	121
Tote, 16x10	D717952493	293
Tote, 4x6	D717952486	293
Tow arm cylinder mount	D717010523	9
Tow arm mount	4812200281	273,286
Tow arm mounting bracket	D717901506	270,283
Track drive, left	D717170503	85
Track frame	D717171001	70
Track sheild, middle	D717170564	85
Track shield	D717170554	85
Track shield	D717170565	85
Track shield	D717171003	70
Track shield, back	D717171006	70
Track shield, middle	D717171005	70
Track tensioner pin	D717170609	71,86
Track, Rubber, LH	D717170502	85
Transition, fume extractor	D717012505	13
Traverse	D717011001	19
Truck hitch	D717900501	16
Tube	D717082012	128
Tube	D717084553	136
Tube	D717952521	271,284
Tube, exhaust	D717081503	132
Tube, fuel supply	D717952402	127
Tube, fuel supply	D717952409	127
Tube, intake coupling	D717082011	128
Tunnel deck plate	D717010537	9
U-bolt	D717083019	5,170
U-bolt, 3/8"	D717906014	255
U-bolt, 4"	D717081530	130
Ubolt, CAC support	D717085077	123
Umbrella	4812200196	103,111
Upper support	D717010541	9
Upsetting ring	D930435011	217,241

Please check Table of Contents for use of a part number

PARTS ALPHABETICAL INDEX

Description	Part Number	Page
US flex decal	4812115484	202
Valve	D717083534	169
Valve handle	4812200317	261
Valve plate	D717954628	186
Valve segment	D717950862	77,92
Valve, bypass	D717951667	125
Valve, DCV cartridge	D717951233	67
Variable housing	D717953536	144,158,165
Variable swash plate	D717953522	144,158,165
Vibration valve	4812221106	47
Wash down suction hose	D717909508	259
Washdown system mount	D717010624	10
Washer	4812220250	124
Washer	D717011015	17,19
Washer	D717170582	70,74,85,88
Washer	D717951163	80,95
Washer	D717951184	80,95
Washer	D717952815	149
Washer	D717952822	149
Washer	D717954159	146,160,166
Washer	D717954166	146,160,166
Washer	D717954642	185
Washer	D880180063	212,236
Washer, #6	D717801100	130,170,178,181 197,255
Washer, #8	4700904229	101,102,109,110
Washer, 0.164"	D717801093	188,190
Washer, 0.75"	D717041004	21
Washer, 1"	D717801065	72,74,86,88,133 260
Washer, 1/4"	D717801310	174,257
Washer, 1/4"	D717801513	198
Washer, 1/4"	D717801716	21,40,42,207,231
Washer, 10	D717801142	113,128,178,181 182,188,190,193 197,221,245,260
Washer, 10mm	D717801135	107,118,122,128 139,184
Washer, 12mm	D717801128	117,133,139
Washer, 14mm	D717801121	133
Washer, 16mm	D717801114	133
Washer, 20mm	D717801149	71,86
Washer, 5/8"	D717180006	207,231
Washer, 8mm	D717801107	117
Washer, M6	4700904639	184
Washer, push roller	D717011013	17,19
Washer, seal	D717909520	259
Washer, spash guard fender	D717010012	4
Wear part, left	D722182711	211,227,235,251
Wear part, right	D722182811	211,228,235,252
Weld plate	D717064509	11
Wheel lug bolt, M14	D717170626	74,88
Wiper	D717070508	44
Wiper backing plate, long	4812200254	40,42
Wiper backing plate, short	4812200303	40,42
Wiper, long	4812200255	40,42
Wiper, long	D717070507	44
Wiper, short	4812200304	40,42
Wire	4700343775	101,102,109,110
Wire grommet plate	D717010638	11
Wiring diagram, AC aux panel	D717104524	197
Wiring diagram, AC main panel	D717104523	191
Wiring diagram, DC control	D717104036	189
Wiring diagram, left console	D717103027	178
Wiring diagram, right console	D717103504	182
Woven return hose wrap	D717080021	118
Wrap, woven exhaust	D717081514	130

Please check Table of Contents for use of a part number

PARTS ALPHABETICAL INDEX

Description	Part Number	Page
Wrench set	D717952255	293
Zerk	D717061027	5,32,222,246

Please check Table of Contents for use of a part number

PARTS DYNAPAC SERVICE

Driven by innovation – committed to customer performance

DYNAPAC
Part of the Atlas Copco Group

Dynapac USA, Inc.
A Part of the Atlas Copco Group
2100 North First Street
Garland, Texas 75040 USA
www.dynapac.com